HF TRANSCEIVER

TS-870S

SERVICE MANUAL

KENWOOD

© 1995-8 PRINTED IN JAPAN
B51-8296-00(N) 1360

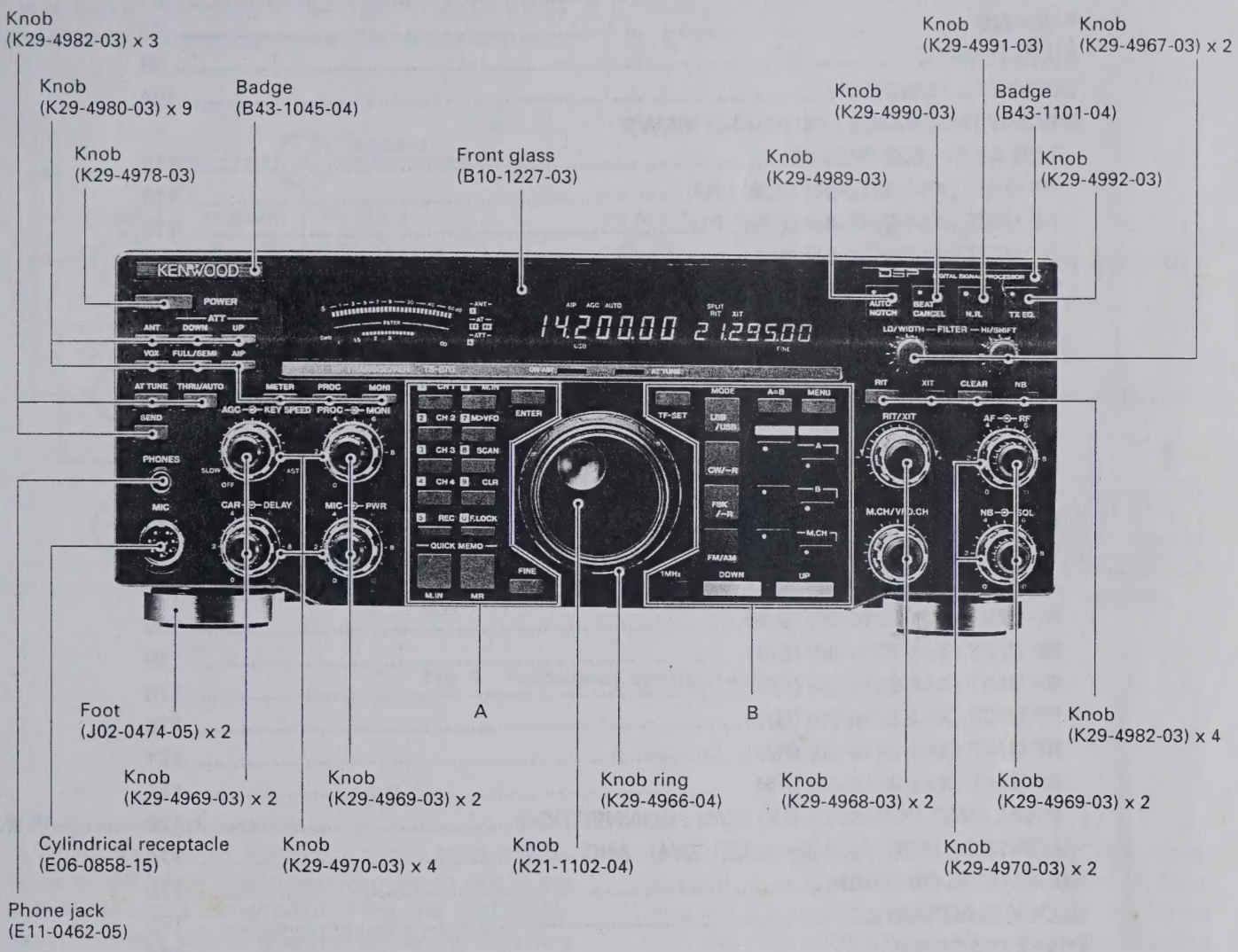

A

Knob (K29-4982-03)	Knob (K29-4982-03)	Knob (K29-4982-03)
Knob (K29-4982-03)	Knob (K29-4982-03)	
Knob (K29-4982-03)	Knob (K29-4982-03)	
Knob (K29-4982-03)	Knob (K29-4982-03)	
Knob (K29-4980-03)	Knob (K29-4980-03)	
Knob (K29-4984-03)	Knob (K29-4984-03)	Knob (K29-4982-03)

B

Knob (K29-4982-03)	Knob (K29-4985-03)	Knob (K29-4982-03)	Knob (K29-4982-03)
	Knob (K29-4986-03)	Knob (K29-4983-03)	Knob (K29-4981-03)
	Knob (29-4987-03)	Knob (K29-4983-03)	Knob (K29-4981-03)
	Knob (K29-4988-03)	Knob (K29-4983-03)	Knob (K29-4981-03)
Knob (K29-4982-03)	Knob (K29-4979-03)		Knob (K29-4979-03)

CONTENTS

CIRCUIT DESCRIPTION 3
DESCRIPTION OF COMPONENTS 45
SEMICONDUCTOR DATA 53
PARTS LIST 58
EXPLODED VIEW 81
PACKING 88
ADJUSTMENT 89
TERMINAL FUNCTION 104
CIRCUIT DIAGRAMS / PC BOARD VIEWS
- LCD ASSY (B38-0736-05) 110
- RF UNIT (X44-3210-00) (A/9) : RF 113
- RF UNIT (X44-3210-00) (B/9) : PLL 117
- RF UNIT (X44-3210-00) (C/9) 127
- VCO2 (X58-3390-03) 127
- FINAL UNIT (X45-351X-XX) (A/5) : FINAL 128
- FINAL UNIT (X45-351X-XX) (B/5) : FILTER 130
- FINAL UNIT (X45-351X-XX) (D/5) : AVR 132
- FINAL UNIT (X45-351X-XX) (E/5) : RELAY 132
- AT UNIT (X53-3340-02) (A/2) 137
- AT UNIT (X53-3340-02) (B/2) 139
- CONTROL UNIT (X53-356X-XX) (A/4) : CONTROL 143
- CONTROL UNIT (X53-356X-XX) (B/4) : SW 147
- TX-RX UNIT (X57-4620-00) 155
- RF UNIT (X44-3210-00) (D/9) 169
- RF UNIT (X44-3210-00) (E/9) 169
- RF UNIT (X44-3210-00) (F/9) 170
- RF UNIT (X44-3210-00) (G/9) 170
- RF UNIT (X44-3210-00) (H/9) 171
- RF UNIT (X44-3210-00) (I/9) 171
- FINAL UNIT (X45-351X-XX) (C/5) : CONNECTION 172
- CONTROL UNIT (X53-356X-XX) (D/4) : MIC 174

SCHEMATIC DIAGRAM 175
BLOCK DIAGRAM 179
LEVEL DIAGRAM 183
DRU-3 (DIGITAL RECORDING UNIT) 185
PG-2Z (DC CABLE) 188
SPECIFICATIONS 189

CIRCUIT DESCRIPTION

Frequency Configuration

The TS-870S is quadruple conversion in receive mode. As a transmitter, it is quadruple conversion in non-FM modes and double conversion in FM mode.

The fourth 11.3kHz IF signal is converted from analog to digital, connected to the DSP in receive mode, and decoded. In transmit mode, the microphone input signal is converted from analog to digital and applied to the DSP. It is converted from digital to analog, passed through a mixer, and becomes the 455kHz TIF signal. In FM mode, however, only 455kHz carriers are output from the DSP.

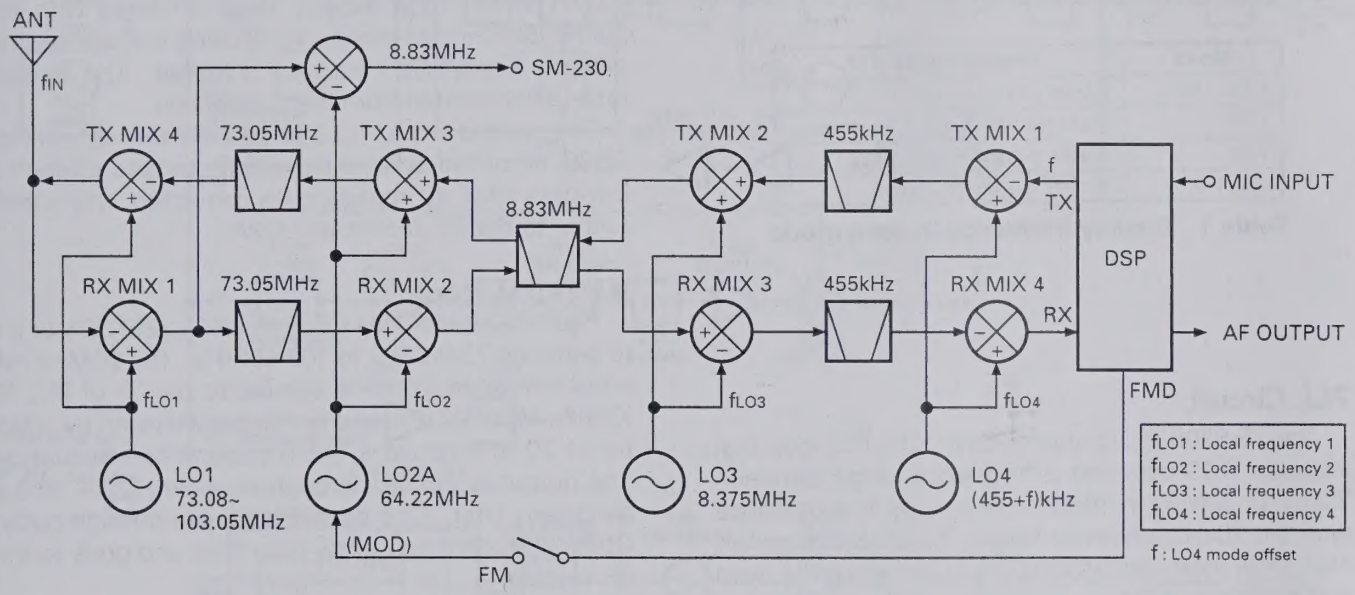

Fig. 1 Frequency configutation

■ Frequency configuration

When the receiver frequency by fIN from the antenna in SSB mode is zero beat (namely, at zero to the SSB signal with a carrier point of fIN), the relationship between these signals is expressed by the following equation.

$$f_{IN} = f_{LO1} - f_{LO2} - f_{LO3} - f_{LO4} + f \quad \ldots . (1)$$

Since all these frequencies are generated by the PLL or DDS circuits as shown in the PLL block diagram in Figure 2, the receiver frequency is determined only by the reference frequency fSTD, the PLL dividing ratio and DDS data. Therefore, the reference frequency accuracy equals the operating frequency accuracy.

The accuracy of the reference oscillator used in the TS-870S is 10ppm (–10 to +50°C). If the temperature-compensated crystal oscillator (TCXO) SO-2 is used, the accuracy becomes 0.5ppm (–10 to +50°C).

The TS-870S local oscillator and CAR DDS are independent of each other. However, they can be operated like a cancel loop configuration by changing the CAR and local oscillator PLL data simultaneously via a microprocessor. This function allows a shift (fLO1, fLO3, fLO4) by the mode change to be performed and the band width of the slope tune to be varied (fLO1, fLO3, fLO4).

When used as a transmitter in SSB mode or in other modes, likewise the frequency is determined by the reference frequency fSTD and dividing ratio. The display frequencies in the modes are listed in Table 1. In the FSK mode, the TS-870S displays the mark transmitter frequency.

CIRCUIT DESCRIPTION

In CW mode, the TS-870S receiving pitch can be changed to the required frequency in 50Hz steps with the desired signal remaining in the center of the IF filter band-pass (Variable CW pitch system). Since the receiving pitch varies along with the transmitter side tone, it is possible to zero-beat by receiving the desired signal at the same pitch as the side tone.

FM transmission is obtained in this system by modulating the f_{LO2} via application of the audio signal from the microphone to the VCO2.

Mode	Display frequency
USB, LSB	Carrier point frequency
CW	Transmission carrier frequency
FSK	Mark transmitter frequency
AM, FM	IF filter center frequency

Table 1 Display frequency in each mode

PLL Circuit

The TS-870S PLL circuit consists of a PLL loop that includes DDS covering a frequency range between 30kHz to 30MHz in 10Hz or 1Hz steps in accordance with the 20kHz reference frequency; DDS that generates other local oscillators (LO3, LO4); and a PLL loop that produces LO2A.

The dividing ratio data to each PLL loop and the DDS data are controlled by a microprocessor. Each loop is controlled by a single crystal frequency control system according to the reference frequency f_{STD}. (See the PLL block diagram in Figure 2.)

■ Reference signal generation circuit

The reference frequency f_{STD} used for frequency control is determined by the 20MHz crystal oscillator (X800 and Q800 : 2SC2714). One reference frequency is output as the reference signal f_{REF} for the PLL and DDS in the PLL section. The other is sent to the TX-RX unit and used as the PLL reference signal for the PLL and DSP.

The crystal oscillator may be replaced by an optional TCXO (SO-2), and the TCXO may be switched to with slide switch S800.

If the optional TCXO (SO-2) is installed, the S800 switch must be set to the SO-2 position.

■ LO2 (PLL section)

Q1 : 2SK508NV in VCO2 (A501 : X58-3390-03) generates 64.22MHz. The 20MHz reference frequency f_{REF} is applied to pin 15 of IC509 : MB86001PF, and is divided internally by a factor of 1000 (4000 in FM mode) to produce a 20kHz (5kHz in FM mode) comparison frequency.

The VCO2 output is applied to pin 6 of IC509 : MB86001PF, and is internally divided by a factor of 3211 (12844 in FM mode). It is compared with the 20kHz (5kHz in FM mode) signal using the phase comparator. The VCO2 frequency is locked. The division ratio is transmitted from the control unit.

The output from PLL2 is passed through buffer Q539, amplified by amplifier Q532, passed through a low-pass filter, its impedance is converted, and is then output to the RF section as LO2A.

■ LO1 (PLL loop)

Four VCOs and uses Q520 to Q523 : 2SK508NV x 4 to generate 73.08MHz to 103.05MHz. The 20MHz reference frequency f_{REF} is applied to pin 15 of PLL IC IC507 : MB86001PF, and is internally divided by a factor of 20 to produce a 1MHz comparison frequency. The output is passed through amplifier Q524, and a band-pass filter. One output is passed through buffer Q526 : 2SC2996 and a low-pass filter and goes to the RF section.

The other output signal is passed through buffer Q525 : 2SC2714 and applied to pin 5 of mixer IC508 : SN76514. A signal of 54.54 to 55.54MHz is input to pin 11 of IC508 and converted to a signal of 18.0 to 48.0MHz. This signal is output from pin 13. The signal is passed through a high-pass filter, a low-pass filter, and amplifier Q531 : 2SC2714 and Q530 : 2SC2712, and goes to pin 6 of PLL IC IC507 : MB86001PF.

This signal is internally divided by N, and compared with the 1MHz signal using the phase comparator. The mixer output frequency is locked in 1MHz steps. The division ratio N is transmitted from the control unit as data (N : 18 to 48) corresponding to 0MHz to 30MHz in 1MHz steps. One of the four VCOs is selected according to the VCO change signal (VB0 to VB3) sent from the control unit.

CIRCUIT DESCRIPTION

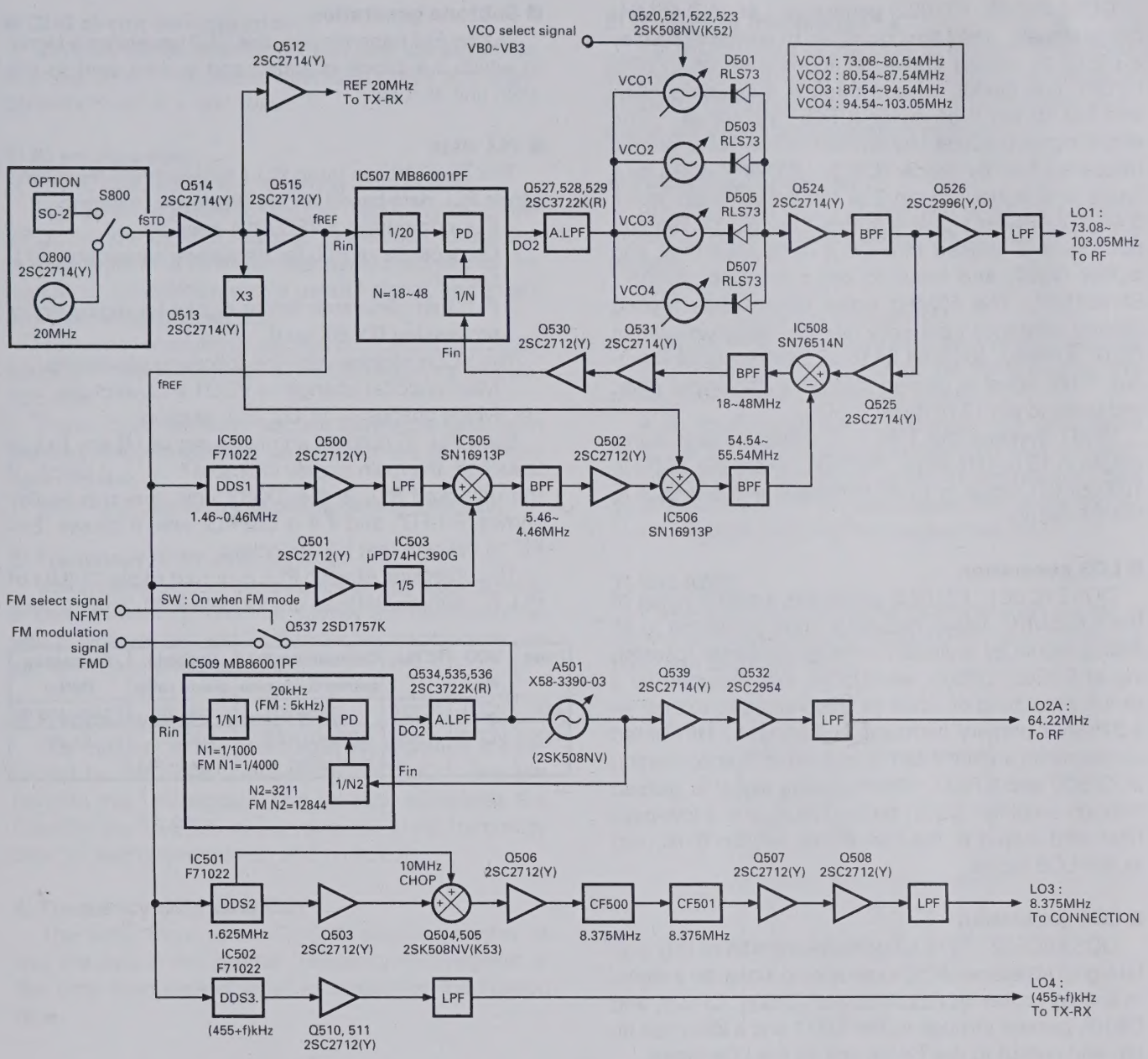

Fig. 2 PLL block diagram

CIRCUIT DESCRIPTION

DDS1 (IC500 : F71022) generates 1.46 to 0.46MHz digital signals. They are converted to analog signals by a digital to analog converter (consisting of CP500, CP501, and Q500), passed through a low-pass filter, and fed to pin 5 of mixer IC505 : SN16913P. The 4MHz signal produced by division of 20MHz reference frequency fREF by divider IC503 : UPD74HC390G by a factor of 5 is input to pin 2 of the mixer IC505, and a 5.46 to 4.46MHz signal is output from pin 1. The output signal is passed through a band-pass filter and buffer Q502, and input to pin 5 of mixer IC506 : SN16913P. The 60MHz signal obtained by tripling 20MHz reference frequency fREF via multiplying circuit Q515 is mixed, and a 54.54 to 55.54MHz signal is output. This signal is passed through a band-pass filter, and goes to pin 13 of mixer IC508.

DDS1 sweeps the 1.46 to 0.46MHz digital signal output in 10 or 1Hz steps, and LO1 covers the 73.08 to 103.05MHz signal in 10 or 1Hz steps and is output to the RF section.

■ LO3 generation

DDS2 (IC501 : F71022) generates a digital signal of the 1.625MHz basic frequency. It is converted to an analog signal by a digital-to-analog converter (consisting of CP502, CP503, and Q503), and chopped by a circuit consisting of Q503 to Q505 so as to extract an 8.375MHz primary harmonic component. Unwanted components are removed by a ceramic filter consisting of CF500 and CF501. The resulting signal is passed through amplifier Q507, buffer Q508, and a low-pass filter, and output to the connection section (final unit) as the LO3 signal.

■ LO4 generation

DDS3 (IC502 : F71022) generates a (455+f) kHz digital signal. It is converted to an analog signal by a digital to analog converter (consisting of CP504, CP505, and Q510), passed through buffer Q511 and a low-pass filter, and output to the TX-RX unit as the LO4 signal.

The LO4 signal is a local oscillator signal used to generate a DSP processing signal f from 455kHz. The f frequency is described in the local signal section (page 14).

■ Subtone generation

During FM transmission, the DSP generates a signal to which a subtone is added and is then sent to the main unit as it is.

■ PLL data

The TS-870S has three PLLs to which the main CPU sends PLL data based on the displayed frequency.

- PLL comprising a VFO (PLL section)
- Local oscillator PLL for frequency conversion (PLL section)
- PLL that generates timing clocks for digital signal processing (TX-RX unit)

The VCOs change with the following conditions.

- Main encoder change → VCO1 (PLL section)
- Mode change → VCO2 (PLL section)

Each PLL IC outputs an unlock signal. If any PLL is unlocked, the main display indicates ". . . . . " (dots). If the unlocked PLL is the TX-RX unit, the sub-display shows "Err-FD", and if it is the PLL unit, it shows "Err-FE" to indicate that it is unlocked.

The unlocking of each PLL is output to pin 11 (UL) of PLL IC : MB86001PF as unlock data (UNLOCK : LOW).

Loop	VCO No.	IC No.	Comparison frequency/divide ratio	Variable divide ratio	Frequency (MHz)
LO1	VCO1	IC507	1MHz/20	18~48	73.08~103.05
LO2	VCO2	IC509	20kHz/1000 5kHz/4000 : FM	3211 12844 : FM	64.22

CIRCUIT DESCRIPTION

■ DDS circuit configuration

The DDS IC has been developed with standard cells to implement a high-speed operation circuit and large-capacity ROM at a low cost.

1) IC configuration

The IC consists of the following components:

Two 28 bit registers for setting frequency data, one 28 bit frequency shift register for addition to the frequency register, a 23 bit parallel signal input section for frequency modulation with a parallel signal, and a data entry and selection section.

Frequency modulation section comprised of a 28 bit adder that adds frequency data and frequency modulation data

Phase data operation section that adds data from the frequency modulation section with the 28 bit phase data register

SIN-ROM that converts phase data to sine data.

2) Frequency/shift data setting

Using serial signals synchronized with clock pulses, a total of 30 bits (2 bits that specify the destination to which data are set and 28 bits for frequency data) are set in three internal registers.

3) Frequency register selection

The data set in the two frequency registers are selected by the SLAB input of the DDS IC. This pin handles the TXC signal. This function eliminates the need for the TS-870S microprocessor to set frequency data for each transmission and reception.

4) Frequency data selection

The SPSL input of the DDS IC selects whether to use the data in the internal frequency shift register or the data from parallel input as frequency modulation data.

5) Frequency modulation

The MDEN input of the DDS IC enables or disables frequency modulation. When frequency modulation is enabled, frequency data is added, and the result is input to the phase data operation section.

6) Phase data operation

The target frequency phase data is output by accumulating 28 bit frequency data in the 28 bit phase accumulator.

$Fout = Fs/2^{28} \cdot Dsum$

Fs : DDS IC input frequency/2

Dsum : Frequency data+Frequency modulation data

If 2^{25} is set for Dsum when 1/8 Fs is output, the phase data must be increased by $\pi/8$.

A 28 bit absolute value operation has been used here, but a 28 bit signed operation can also be used, assuming that the MSB is a sign. If complement data of 8000000 to FFFFFFFF (hex) is set, the phase moves in the negative direction for the positive data.

7) SIN-ROM

Phase data from the phase data operation section is converted to sine data of 0000 to FFFF (hex) in the 16 bit offset binary format.

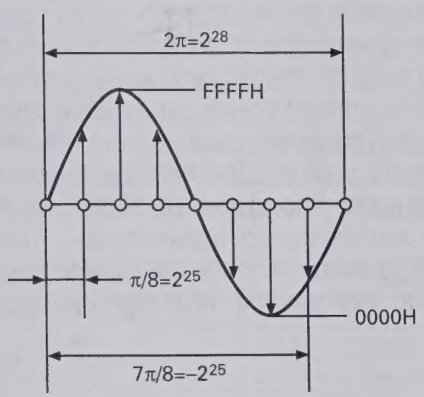

CIRCUIT DESCRIPTION

Receiver Circuit

The basic configuration of the receiver circuit is quadruple conversion. After the frequency is converted to the 11.3kHz fourth IF, the DSP carries out AGC, filtering, detection, and signal processing. Figure 3 is a receiver block diagram.

The signal coming from the antenna connector is passed through the antenna switching relay (K301) in the final unit (E/5 relay section), the antenna tuner unit, and the transmit/receive changeover relay (K302) within the relay section, and then goes to the CN2 (RAT) of the RF unit (A/9 RF section).

The signal input to the RF unit is passed through protection lamp PL1 for strong signal input, external receiver power distribution circuit L1 and L2 and switching circuit K1, and is input to the ATT (–6dB, –12dB) circuit. This distribution circuit is switched when the EXT RX (function that distributes the signals from the antenna to the external receiver), which is set from menu No.53, is turned ON. When this function is ON, the signal from the antenna is attenuated by about 4dB and output to the receiver section in the subsequent stage and the EXT RX terminal on the rear. The signal to the EXT RX terminal is passed through lamp PL2 for protection during transmission. The lamp turns OFF when about 10W is input.

The signal is passed through the ATT switching circuit, then goes to the BC band attenuation circuit (L7 to L9, C19 to C22). The BC band signal is attenuated by 5 to 10dB to prevent power saturation of the band-pass filter switching diode resulting from interference from a proximate station. The band-pass filter consists of two low-pass filters and 10 band-pass filters, and passes signals during transmission. The pin diode (1SV128) is used to change the input to raise the signal saturation level when a HIGH signal is input.

The RF amplifier circuit functions as a low-gain amplifier using Q14 and Q15 : 2SK2218(5) x 2 when the frequency is 21.49MHz or lower, and it functions as a high-gain amplifier using Q13 : 3SK131(M) when the frequency is higher than 21.49MHz. It is bypassed when AIP is ON.

The 73.05MHz first IF signal is generated by quad mixer Q17 to Q20 : 2SK520(K44) x 4. It is passed through XF1 73.05MHz MCF, Q24 : 3SK131(M) first mixer amplifier, and Q26 and Q27 : 2SK520(K43) mixer to produce a 8.83MHz second IF signal. The second IF signal is divided into two signals, one of which is branched to the noise blanker, amplified by amplifier Q28, and then goes to the NB circuit. The other signal is input to the second IF signal amplifier, and serves as a blanking gate by the NB and RBK signals. The amplified second IF signal is passed through the 8.83MHz IF filter, and output to the final unit (C/5 connection section) from CN10. This signal is switched with the diode switch D62 and D68, and functions as a second IF signal output during reception and a third IF signal input during transmission.

The second IF signal input to CN412 in the final unit (C/5 connection section) is routed to the receiver circuit by D450, and input to the mixer Q460 and Q461 to generate a 455kHz third IF signal. It is passed through the 455kHz IF filter, amplified by third IF amplifier Q475, and output by CN411 to the TX-RX unit as RIF signal. The total gain of the receiver unit is adjusted by VR1 in the TX-RX unit.

■ IF filter

The IF filter consists of a DSP digital filter. If there is a HIGH signal outside the DSP filter band, the analog to digital converter input level may be saturated, and the filter does not work properly. Thus, an analog filter is inserted between the second IF (8.83MHz) and the third IF (455kHz) so that it does not impair the DSP filter properties. To operate each filter properly, there are three kinds of filters for each IF signal and also slope tuning is carried out.

1) Filters characteristics

Item	Rating
Nominal center frequency	73.05MHz
Pass bandwidth	±7.5kHz or more at 3dB
Attenuation bandwidth	±30kHz or less at 40dB
Ripple	1.0dB or less
Insertion loss	3.0dB or less
Guaranteed attenuation	70dB or more at fo + (500 to 1000kHz) 70dB or more at fo – (200 to 1000kHz)
Center frequency deviation	Within ±1.5kHz at 3dB
Terminating impedance	2kΩ ± 10%

MCF (L71-0401-05) : RF unit XF1

Item	Rating
Nominal center frequency	8830kHz
Center frequency deviation	Within ±150Hz at 6dB
Pass bandwidth	±1.5kHz or more at 6dB
Attenuation bandwidth	±1.9kHz or less at 20dB ±2.75kHz or less at 60dB ±3.5kHz or less at 80dB
Ripple	2dB or less
Insertion loss	6dB or less
Guaranteed attenuation	80dB or more in the range ±3.5kHz to ±1MHz
Terminating impedance	600Ω / 15pF

MCF (L71-0235-05) : RF unit XF2

Item	Rating
Nominal center frequency	8830kHz
Pass bandwidth	±3.0kHz or more at 6dB
Attenuation bandwidth	±16.0kHz or less at 60dB ±13.0kHz or less at 50dB
Guaranteed attenuation	70dB or more with in fo ± 1MHz (Without spurious in the range fo to fo+500kHz)
Ripple	Within 1.0dB
Insertion loss	Within 1.5dB
Terminating impedance	1850kΩ / 2pF

MCF (L71-0266-05) : RF unit XF3

Item	Rating
Nominal center frequency	8.400MHz
3dB attenuation bandwidth	Within 180 ± 40kHz
20dB attenuation bandwidth	400kHz or less
Insertion loss	9.0dB or less Formula : 20 x log [E1÷ (2 x E2)]
Ripple	1.0dB or less (within 3dB band)
Spurious attenuation	25dB or more (6.0 to 10.0MHz)
Voltage capacity	50V DC (1 minute)
Insulating resistance	100MΩ or more (100V DC)
Input and output impedance	330Ω

Ceramic filter (L72-0343-05) : RF unit CF500, 501

Item	Rating
Nominal center frequency	455kHz
6dB bandwidth	±3kHz (455kHz)
50dB bandwidth	±9kHz (455kHz)
Ripple	2dB or less (within 455+2kHz)
Insertion loss	6dB or less
Guaranteed attenuation	60dB or more (within 455±100kHz)
Input and output impedance	2.0kΩ

Ceramic filter (L72-0319-05) : Final unit CF451

Item	Rating
Center frequency	455±0.20kHz
6dB bandwidth	2.9 to 3.2kHz
60dB bandwidth	4.7kHz or less
Guaranteed attenuation	60dB or more at 0.1 to 1MHz
Spurious	40dB or more at 600 to 700kHz
6dB band ripple	2dB or less
Insertion loss	6dB or less
Input and output impedance	2kΩ

Ceramic filter (L72-0333-05) : Final unit CF452

Item	Rating
Nominal center frequency	455kHz
6dB bandwidth	±7.5kHz or more (455kHz)
50dB bandwidth	±15kHz or less (455kHz)
Ripple	3dB or less (within 455+5kHz)
Insertion loss	6dB or less
Guaranteed attenuation	35dB or more (within 455±100kHz)
Input and output impedance	1.5kΩ

Ceramic filter (L72-0366-05) : Final unit CF453

CIRCUIT DESCRIPTION

Receiver Circuit

The basic configuration of the receiver circuit is quadruple conversion. After the frequency is converted to the 11.3kHz fourth IF, the DSP carries out AGC, filtering, detection, and signal processing. Figure 3 is a receiver block diagram.

The signal coming from the antenna connector is passed through the antenna switching relay (K301) in the final unit (E/5 relay section), the antenna tuner unit, and the transmit/receive changeover relay (K302) within the relay section, and then goes to the CN2 (RAT) of the RF unit (A/9 RF section).

The signal input to the RF unit is passed through protection lamp PL1 for strong signal input, external receiver power distribution circuit L1 and L2 and switching circuit K1, and is input to the ATT (–6dB, –12dB) circuit. This distribution circuit is switched when the EXT RX (function that distributes the signals from the antenna to the external receiver), which is set from menu No.53, is turned ON. When this function is ON, the signal from the antenna is attenuated by about 4dB and output to the receiver section in the subsequent stage and the EXT RX terminal on the rear. The signal to the EXT RX terminal is passed through lamp PL2 for protection during transmission. The lamp turns OFF when about 10W is input.

The signal is passed through the ATT switching circuit, then goes to the BC band attenuation circuit (L7 to L9, C19 to C22). The BC band signal is attenuated by 5 to 10dB to prevent power saturation of the band-pass filter switching diode resulting from interference from a proximate station. The band-pass filter consists of two low-pass filters and 10 band-pass filters, and passes signals during transmission. The pin diode (1SV128) is used to change the input to raise the signal saturation level when a HIGH signal is input.

The RF amplifier circuit functions as a low-gain amplifier using Q14 and Q15 : 2SK2218(5) x 2 when the frequency is 21.49MHz or lower, and it functions as a high-gain amplifier using Q13 : 3SK131(M) when the frequency is higher than 21.49MHz. It is bypassed when AIP is ON.

The 73.05MHz first IF signal is generated by quad mixer Q17 to Q20 : 2SK520(K44) x 4. It is passed through XF1 73.05MHz MCF, Q24 : 3SK131(M) first mixer amplifier, and Q26 and Q27 : 2SK520(K43) mixer to produce a 8.83MHz second IF signal. The second IF signal is divided into two signals, one of which is branched to the noise blanker, amplified by amplifier Q28, and then goes to the NB circuit. The other signal is input to the second IF signal amplifier, and serves as a blanking gate by the NB and RBK signals. The amplified second IF signal is passed through the 8.83MHz IF filter, and output to the final unit (C/5 connection section) from CN10. This signal is switched with the diode switch D62 and D68, and functions as a second IF signal output during reception and a third IF signal input during transmission.

The second IF signal input to CN412 in the final unit (C/5 connection section) is routed to the receiver circuit by D450, and input to the mixer Q460 and Q461 to generate a 455kHz third IF signal. It is passed through the 455kHz IF filter, amplified by third IF amplifier Q475, and output by CN411 to the TX-RX unit as RIF signal. The total gain of the receiver unit is adjusted by VR1 in the TX-RX unit.

■ IF filter

The IF filter consists of a DSP digital filter. If there is a HIGH signal outside the DSP filter band, the analog to digital converter input level may be saturated, and the filter does not work properly. Thus, an analog filter is inserted between the second IF (8.83MHz) and the third IF (455kHz) so that it does not impair the DSP filter properties. To operate each filter properly, there are three kinds of filters for each IF signal and also slope tuning is carried out.

1) Filters characteristics

Item	Rating
Nominal center frequency	73.05MHz
Pass bandwidth	±7.5kHz or more at 3dB
Attenuation bandwidth	±30kHz or less at 40dB
Ripple	1.0dB or less
Insertion loss	3.0dB or less
Guaranteed attenuation	70dB or more at fo + (500 to 1000kHz) 70dB or more at fo – (200 to 1000kHz)
Center frequency deviation	Within ±1.5kHz at 3dB
Terminating impedance	2kΩ ± 10%

MCF (L71-0401-05) : RF unit XF1

Item	Rating
Nominal center frequency	8830kHz
Center frequency deviation	Within ±150Hz at 6dB
Pass bandwidth	±1.5kHz or more at 6dB
Attenuation bandwidth	±1.9kHz or less at 20dB ±2.75kHz or less at 60dB ±3.5kHz or less at 80dB
Ripple	2dB or less
Insertion loss	6dB or less
Guaranteed attenuation	80dB or more in the range ±3.5kHz to ±1MHz
Terminating impedance	600Ω / 15pF

MCF (L71-0235-05) : RF unit XF2

Item	Rating
Nominal center frequency	8830kHz
Pass bandwidth	±3.0kHz or more at 6dB
Attenuation bandwidth	±16.0kHz or less at 60dB ±13.0kHz or less at 50dB
Guaranteed attenuation	70dB or more with in fo ± 1MHz (Without spurious in the range fo to fo+500kHz)
Ripple	Within 1.0dB
Insertion loss	Within 1.5dB
Terminating impedance	1850kΩ / 2pF

MCF (L71-0266-05) : RF unit XF3

Item	Rating
Nominal center frequency	8.400MHz
3dB attenuation bandwidth	Within 180 ± 40kHz
20dB attenuation bandwidth	400kHz or less
Insertion loss	9.0dB or less Formula : 20 x log [E1+ (2 x E2)]
Ripple	1.0dB or less (within 3dB band)
Spurious attenuation	25dB or more (6.0 to 10.0MHz)
Voltage capacity	50V DC (1 minute)
Insulating resistance	100MΩ or more (100V DC)
Input and output impedance	330Ω

Ceramic filter (L72-0343-05) : RF unit CF500, 501

Item	Rating
Nominal center frequency	455kHz
6dB bandwidth	±3kHz (455kHz)
50dB bandwidth	±9kHz (455kHz)
Ripple	2dB or less (within 455+2kHz)
Insertion loss	6dB or less
Guaranteed attenuation	60dB or more (within 455±100kHz)
Input and output impedance	2.0kΩ

Ceramic filter (L72-0319-05) : Final unit CF451

Item	Rating
Center frequency	455±0.20kHz
6dB bandwidth	2.9 to 3.2kHz
60dB bandwidth	4.7kHz or less
Guaranteed attenuation	60dB or more at 0.1 to 1MHz
Spurious	40dB or more at 600 to 700kHz
6dB band ripple	2dB or less
Insertion loss	6dB or less
Input and output impedance	2kΩ

Ceramic filter (L72-0333-05) : Final unit CF452

Item	Rating
Nominal center frequency	455kHz
6dB bandwidth	±7.5kHz or more (455kHz)
50dB bandwidth	±15kHz or less (455kHz)
Ripple	3dB or less (within 455+5kHz)
Insertion loss	6dB or less
Guaranteed attenuation	35dB or more (within 455±100kHz)
Input and output impedance	1.5kΩ

Ceramic filter (L72-0366-05) : Final unit CF453

■ IF gain correction

The total gain changes when the AIP is turned ON or OFF or the band is 21.49MHz or higher. To limit the changes, the DSP corrects the IF gain. Table 2 lists the corrections. When the "AIP S-meter correction" on menu No.11 is turned ON, the S-meter is corrected when the AIP is turned ON. And since the IF gain is corrected greatly, the receiver internal noise output becomes large.

Frequency	Correction (dB)			Pre-amp gain (dB) reference
	AIP			
	OFF	ON1 (Menu 11 OFF)	ON2 (Menu 11 ON) SSB, CW, FSK only	
30kHz~ 21.49MHz	–2	0	+12	15
21.49MHz~ 30.MHz	–7	0	+12	21

Table 2 IF gain corrections

■ NB circuit

The noise blanker, like the conventional one, branches the signal before the narrow-band filter of the 8.83MHz second IF, and detects noise, and performs blanking using the second IF amplifier as a gate. The signal is amplified by Q28, detected by the AGC amplification and noise detection circuit consisting of Q29 to Q32 and D46, and then a blanking pulse is generated by the IC9 comparator. The noise detection circuit Q29 to Q32 and D46 is separated into segments by a jumper in the unit to prevent sneak path.

■ Slope tune

The operating principle of SSB-SLOPE-TUNE is explained first. When f_{LO1}, f_{LO3}, and f_{LO4} in Figure 4 are at their normal frequencies, the synthesized bandwidth is indicated by A. If the f_{LO1} frequency is increased by $\Delta f1$ and the f_{LO3} frequency is decreased by $\Delta f1$, the filter of the 8.83MHz band shifts to position B. The synthesized bandwidth is indicated by the section overlapped by A and B. When the frequencies of f_{LO1} and f_{LO3} are lowered by $\Delta f2$, only the 455kHz second IF filter shifts to position C. The synthesized bandwidth is indicated by the section overlapped by B and C.

Therefore, high frequencies are cut off by increasing the f_{LO1} frequency and decreasing the f_{LO3} frequency. Low frequencies are cut off by decreasing the f_{LO3} and f_{LO4} frequencies. The TS-870S enables these operations using the DSP filter.

In SSB mode, slope tune high cut/low cut is switched by using the filter select control : in CW mode, the WIDTH (bandwidth)/SHIFT (center frequency) is changed, and in FSK mode, the WIDTH (bandwidth) is changed. The microcomputer in the control unit sends filter select data to the DSP, and slope tuning is carried out by changing frequency data given to the PLL and DDS. The second IF (8.83MHz) and third IF (455kHz) filters are selected to carry out slope tuning effectively. Tables 3 and 4 list filter selections, slope tuning and analog filter high cut/low cut amounts. Slope tuning low cut/high cut can be switched in AM mode, and the WIDTH can be switched in FM mode by using DSP filters only, and the analog filter is fixed to 15kHz.

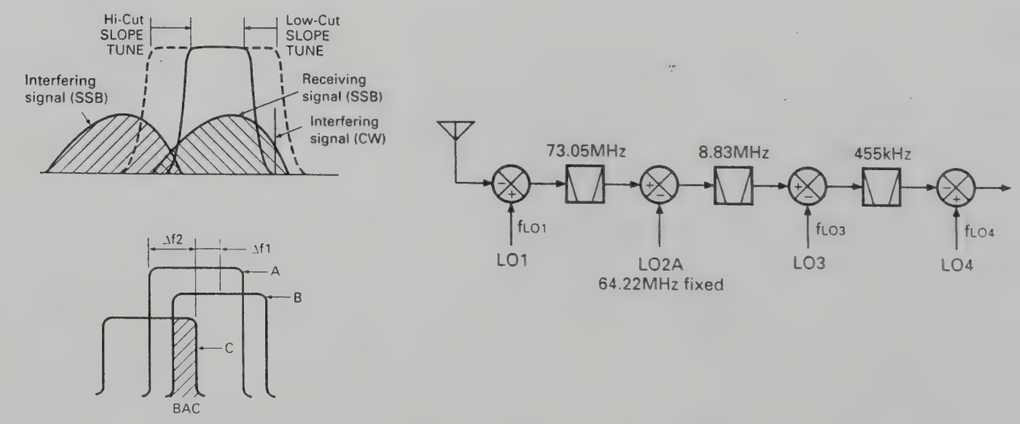

Fig. 4 SSB slope tune operating principle

CIRCUIT DESCRIPTION

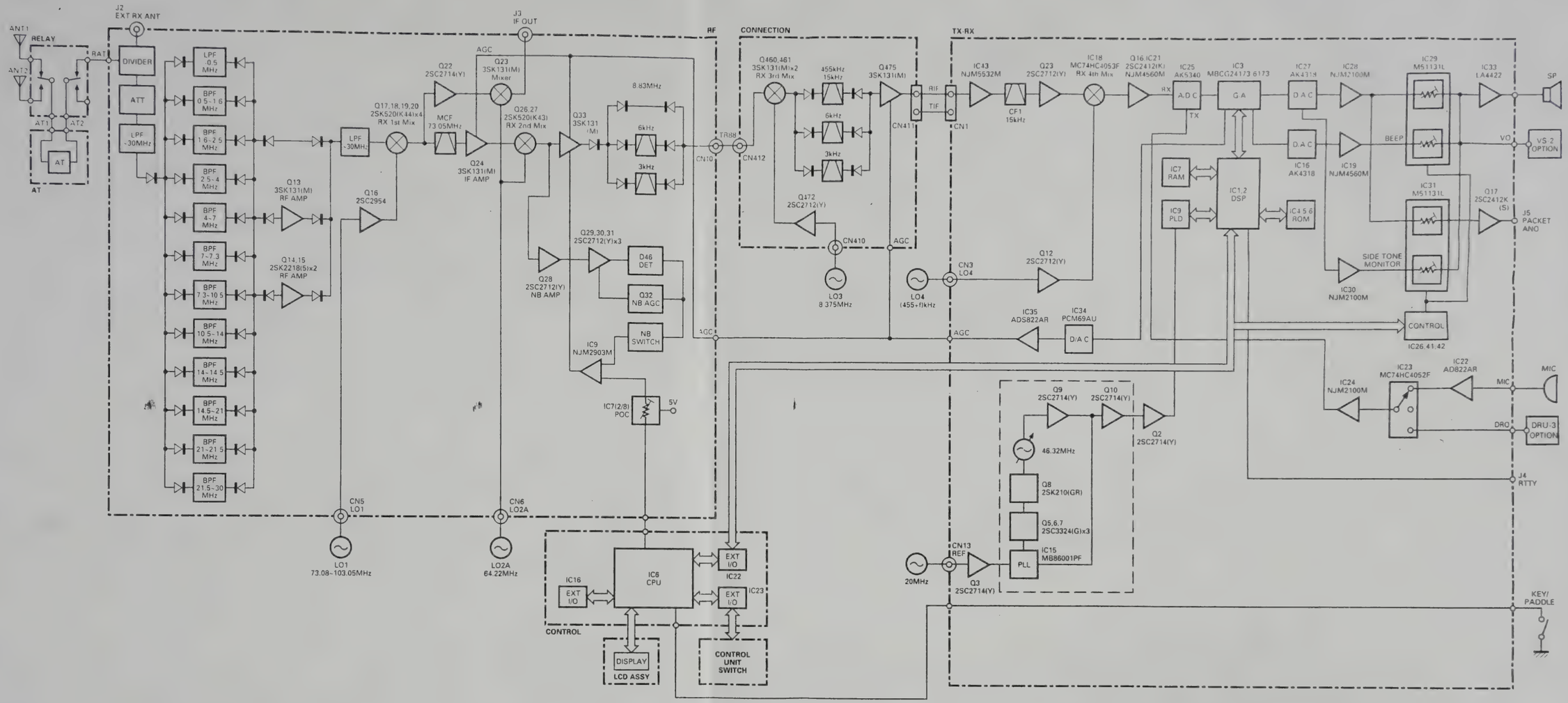

Fig. 3 Receiver block diagram

CIRCUIT DESCRIPTION

	1.4k	1.6k	1.8k	2.0k	2.2k	2.4k	2.6k	2.8k	3.0k	3.4k	4.6k	6.0k
0 (Hz)	1.0k	0.8k	0.6k	0.4k	0.2k	0.0k	1.4k	1.2k	1.0k	0.6k	0.0k	0.0k
50	↑	↑	↑	↑	↑	↑	↑	↑	↑	↑	↑	↑
100	↑	↑	↑	↑	↑	↑	↑	↑	↑	↑	↑	↑
200	↑	↑	↑	↑	↑	↑	–0.2k	↑	↑	↑	↑	↑
300	↑	↑	↑	↑	↑	↑	↑	↑	↑	↑	↑	↑
400	↑	↑	↑	↑	↑	↑	↑	–0.4k	↑	↑	↑	↑
500	↑	↑	↑	↑	↑	↑	↑	↑	↑	↑	↑	↑
600	↑	↑	↑	↑	↑	↑	↑	↑	–0.6k	↑	↑	↑
800	↑	↑	↑	↑	↑	↑	↑	↑	↑	↑	–0.6k	↑
1000	↑	↑	↑	↑	↑	↑	↑	↑	↑	–1.0k	↑	↑

← High cut position

Filter selection
- 3kHz filter
- 6kHz filter
- 15kHz filter
- Default

↑
Low cut posotion
(455kHz filter) Low cut amount

(8.83MHz filter) High cut amount

Table 3 SSB slop tuning and analog filter high/low cut (Hz)

	400	450	500	550	600	650	700	750	800	850	900	950	1000
50 (Hz)	375	425	475	525	575	625	675	725	775	825	875	925	975
100	350	400	450	500	550	600	650	700	750	800	850	900	950
200	300	350	400	450	500	550	600	650	700	750	800	850	900
400	200	250	300	350	400	450	500	550	600	650	700	750	800
600	100	150	200	250	300	350	400	450	500	550	600	650	700
1000	–100	–50	0	50	100	150	200	250	300	350	400	450	500

← Filter center position

Default

↑
Filter width

Table 4-1 CW WIDTH/SHIFT low cut amount (Hz)

	400	450	500	550	600	650	700	750	800	850	900	950	1000
50 (Hz)	1975	1925	1875	1825	1775	1725	1675	1625	1575	1525	1475	1425	1375
100	1950	1900	1850	1800	1750	1700	1650	1600	1550	1500	1450	1400	1350
200	1900	1850	1800	1750	1700	1650	1600	1550	1500	1450	1400	1350	1300
400	1800	1750	1700	1650	1600	1550	1500	1450	1400	1350	1300	1250	1200
600	1700	1650	1600	1550	1500	1450	1400	1350	1300	1250	1200	1150	1100
1000	1500	1450	1400	1350	1300	1250	1200	1150	1100	1050	1000	950	900

← Filter center position

Default

↑
Filter width

Table 4-2 CW WIDTH/SHIFT high cut amount (Hz)

CIRCUIT DESCRIPTION

■ Local signals (LO1, LO3, LO4)

1) LO1

Table 5 lists LO1 frequency configuration.

DDS1 varies from 0.46 to 1.46MHz, and when the display frequency is multiple MHz (for example, 14.000MHz), 0.96MHz is output. When the display frequency is increased, the DDS1 frequency is reduced by the amount of change. When the DDS1 frequency is reduced to 0.46MHz, the frequency is switched to 1.46MHz, and when it is increased to 1MHz, the frequency returns to 0.96MHz (Figure 5). By changing the 1MHz band in synchronization with the display frequency, the 1MHz comparison PLL circuit is locked and LO1 is generated.

In Table 5, the 0.96MHz base indicates the DDS output when the frequency is multiple MHz. The frequency (UNV) indicates the decimal digits of the MHz frequency. (If the display frequency is 14.2MHz, (UNV) = 0.2MHz.) DDS is switched by 500kHz, so – 0.5MHz ≤ (UNV) < 0.5MHz.

As described in the slope tuning section, slope tuning high-cutting is corrected for LO1, so the correction is added to the DDS output. SSB H in Table 5 indicates the correction. Table 3 shows the actual correction of SSB H. (For example, when the high frequency is 2.2kHz, the correction SSB H is 0.2kHz.)

Since RIT and XIT change the receive and transmit frequencies by the preset amount, it needs to be corrected. They are D RIT and D XIT in Table 5.

The "8.83MHz window-joining" (D 883) in Table 5 is determined during adjustment. For example, the equation for calculating the DDS output frequency for 14.2MHz USB. The high-cut frequency is assumed to be 2.6kHz. (D 833 is zero.)

DDS1 : 0.96M – (UNV) – (OFS SSB) + (SSB H)
= 0.96M – 0.2M – 1.2k – 0.2k
= 758.6kHz
0.96M : Base
UNV : 14.2M – 14.0M = 0.2M
OFS SSB (Filter offset) : 1.2k
SSB H (Slope HI) : –0.2k (See table 3.)

The LO1 output frequency f_{LO1} is calculated from the frequency configuration in Figure 6.

$f_{LO1} = f_{PLL\ IN} + 60MHz - (4MHz + f_{DDS1})$
$= 32MHz + 60MHz - (4MHz + 758.6kHz)$
$= 87.2414MHz$

Where $f_{PLL\ IN}$ is the PLL input frequency and f_{DDS1} is the DDS1 output frequency.

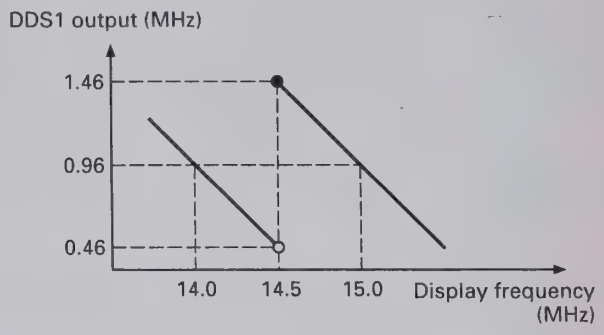

Fig. 5 Relationship between display frequency and DDS output frequency

2) LO3

Table 6 lists the LO3 frequency configuration.

The LO3 frequency is 8.375MHz, and is generated by the chopper circuit. The DDS2 output frequency is 1.625MHz. For LO3, slope tuning low-cut/high-cut is corrected. SSB H and SSB L in Table 6 indicate the corrections. D 833 and D 455 are values determined during filter window-joining and adjustment.

For example, if USB is 14.2MHz, high-cut frequency is 2.6kHz, and low-cut frequency is 300Hz, the LO3 frequency is calculated as follows. It is assumed that D 833 and D 455 are zero.

$f_{LO3} = 1.625MHz + (SSB\ H) + (SSB\ L)$
$= 1.625MHz + (-0.2kHz) + 300Hz$
$= 1625.1kHz$

CIRCUIT DESCRIPTION

3) LO4

Table 7 lists the LO4 frequency configuration.

For LO4, correction (OFS SSB) is carried out so that a signal passes through a filter according to the mode, and the slope tune low-cut (SSB L) is corrected. The mode offset is the frequency (11.30859375kHz) used for processing by the DSP, and its sign changes with the mode.

For example, if USB is 14.2MHz and the low-cut frequency is 300Hz, the LO4 output frequency is calculated as follows.

fLO4 = 455kHz + (mode offset) + (OFS SSB) + (SSB L)
= 455kHz + 11.30859375kHz + 300Hz
= 467.8085938kHz

The filter is corrected according to each mode by LO1 and LO4, slope tuning high-cut is corrected by LO1 and LO3, and low-cut is corrected by LO3 and LO4.

In other modes, each local frequency is determined by the calculation method as shown previously in Tables 5 to 7.

Component	DDS1 (1HZ)															
	LSB		USB		CW		CW-R		FSK		FSK-R		AM		FM	
	RX	TX	RX	TX	RX	TX	RX	TX	RX	TX	RX	TX	RX	TX	RX	TX
BASE	0.96MHz*6															
Frequency (100kHz or less)	– (UNV)															
Mode offset																
Filter offset*1	+ (OFS SSB)	+2k	– (OFS SSB)	–2k	–800		+800									
CW pitch					+ (PITCH)		– (PITCH)									
FSK tone (H/L)																
FSK shift (polarity)																
RIT	– (D RIT)		– (D RIT)		– (D RIT)		– (D RIT)		– (D RIT)		– (D RIT)		– (D RIT)		– (D RIT)	
XIT		– (D RIT)		– (D RIT)		– (D RIT)		– (D RIT)		– (D RIT)		– (D RIT)		– (D RIT)		– (D RIT)
Slope high*2, 3	– (SSB H)		+ (SSB H)		+ (CW H)		– (CW H)		– (FSK H)		+ (FSK H)					
Slope low																
8.83MHz window-joining*4, 5	– (D 883)			+ (D 883)												
455kHz window-joining																

*1 : Although receiver data has an independent value for each mode, the data area for calculation is D OFFSET.
Transmitter data is fixed because the 8.83MHz filter bandwidth is fixed.

*2 : Although it has an independent value for each mode, the data area for calculation is D SLOP L.

*3 : The slope low-cut is carried out at 455kHz and high-cut is carried out at 8.83MHz.

*4 : The LSB and USB may have the same value because the filter bandwidth is wide.

*5 : The positive direction for adjustment is the direction in which the receive carrier frequency increases.

*6 : The DDS1 variable frequency is 1.45MHz and is shifted by 500kHz.

Table 5 LO1 frequency configuration

CIRCUIT DESCRIPTION

Component	DDS2 (LO3)															
	LSB		USB		CW		CW-R		FSK		FSK-R		AM		FM	
	RX	TX	RX	TX	RX	TX	RX	TX	RX	TX	RX	TX	RX	TX	RX	TX
BASE	1.625MHz*6															
Mode offset																
Filter offset																
CW pitch																
FSK tone (H/L)																
FSK shift (polarity)																
RIT/XIT																
Slope high*1, 3	– (SSB H)		+ (SSB H)		+ (CW H)		– (CW H)		– (FSK H)		+ (FSK H)					
Slope low*2, 3	– (SSB L)		+ (SSB L)		+ (CW L)		– (CW L)		– (FSK L)		+ (FSK L)					
8.83MHz window-joining*4, 5	– (D 883)			+ (D 883)												
455kHz window-joining*4, 5	+ (D 455)			– (D 455)												

*1 : Although it has an independent value for each mode.

*2 : Although it has an independent value for each mode.

*3 : The slope low-cut is carried out at 455kHz and high-cut is carried out at 8.83MHz.

*4 : The LSB and USB may have the same value because the filter bandwidth is wide.

*5 : The positive direction for adjustment is the direction in which the receive carrier frequency increases.

*6 : Since the DDS2 output frequency is high, 1.625MHz (10MHz – output frequency (8.375MHz)) is output to the DDS.

Table 6 LO3 frequency configuration

Component	DDS3 (LO4)															
	LSB		USB		CW		CW-R		FSK		FSK-R		AM		FM	
	RX	TX	RX	TX	RX	TX	RX	TX	RX	TX	RX	TX	RX	TX	RX	TX
BASE	455kHz															
Mode offset (kHz)	–11.30859375		+11.30859375		+11.30859375		–11.30859375		–11.30859375		+11.30859375		+11.30859375		+11.30859375	
Filter offset*1	- (OFS SSB)	–2k	+ (OFS SSB)	+2k	+800		–800									
CW pitch																
FSK tone (H/L)									–2125 /–1275		+2125 /+1275					
FSK shift (polarity)											+ (FSK S)	+ (FSK S)				
RIT/XIT																
Slope high																
Slope low*2, 3	– (SSB L)		+ (SSB L)		+ (CW L)		– (CW L)		– (FSK L)		+ (FSK L)					
8.83MHz window-joining																
455kHz window-joining*4, 5	– (D 455)			+ (D 455)												

*1 : Although receiver data has an independent value for each mode.
Transmitter data is fixed because the 8.83MHz filter bandwidth is fixed.

*2 : Although it has an independent value for each mode.

*3 : The slope low-cut is carried out at 455kHz and high-cut is carried out at 8.83MHz.

*4 : The LSB and USB may have the same value because the filter bandwidth is wide.

*5 : The positive direction for adjustment is the direction in which the receive carrier frequency increases.

Table 7 LO4 frequency configuration

CIRCUIT DESCRIPTION

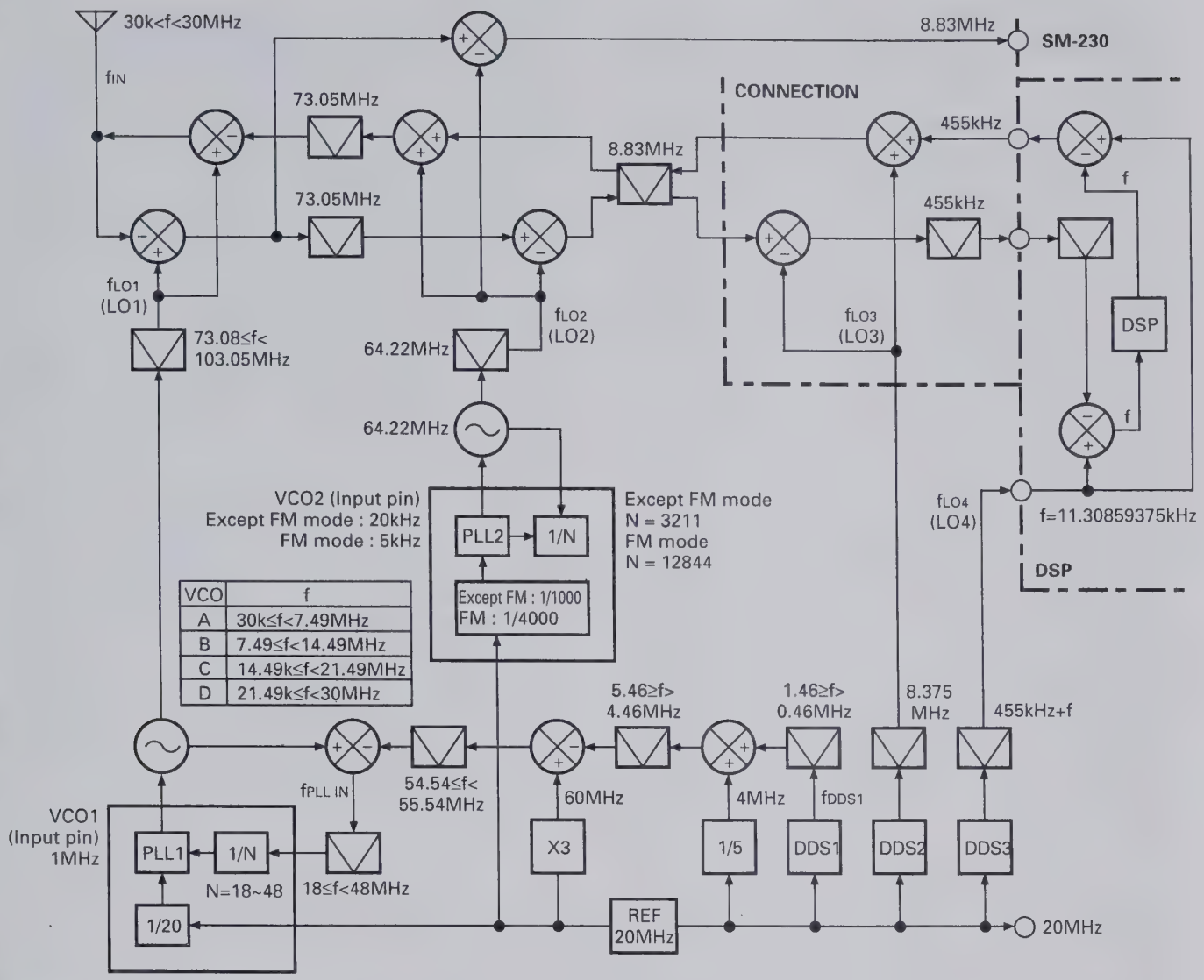

Fig. 6 Frequency configuration

CIRCUIT DESCRIPTION

Transmitter Circuit

The transmitter system block diagram is shown in Figure 7.

The TS-870S has the same frequency configuration as the TS-850 after the DSP generates the IF signal and converts it to 455kHz as a basic configuration.

A difference from the conventional model other than DSP modulation is that the TS-870S uses a digital-to-analog converter and a microcomputer for various controls. This allows for fine control and reduces the number of controls needed for adjustment.

The TIF (second IF) signal output from the TX-RX unit goes to the final unit (C/5 connection section). The signal is converted from 455kHz to 8.83MHz. The 8.83MHz third IF signal converted by the Q470 and Q471: 3SK131(M) mixer is switched to the transmitter by the D450 diode switch, and output from CN412 to the RF unit (A/9 RF section) as TR88 signal.

The signal input to CN10 of the RF unit is passed through the 8.83MHz IF filter used for both transmission and reception. During transmission, XF3 BW: 5kHz is selected by D69 and D67 and the filter attenuates the components outside the band. The transmit signal switched by D68 is amplified and ALC-controlled by the Q39 ALC amplifier, and the resulting signal goes to the D49 TX gain control circuit. This circuit controls the gain at the transmission stage according to the given voltage via a variable attenuator of a pin diode. The control voltage is controlled by a microprocessor, and is used to set the gain for each band or set the gain with the PWR knob and mode.

The third IF signal is then converted to the 73.05MHz fourth IF signal by the Q37 and Q38 : 3SK131(M) mixer. The signal is passed through the LC filter, and is converted to the target frequency by the final local oscillator LO1 at the Q35 and Q36 : 3SK184(R) mixer. The signal is passed through the radiation filter and the band-pass filter used by both the transmitter and receiver sections to attenuate the spurious outside the band. The band-pass filter output is amplified by Q5 : 2SC2954, and output to the final unit (A/5 final section) from CN4 as the drive signal.

■ TX-AGC

The DSP controls the input level until it starts modulation. It is like AGC applied to the microphone amplifier, and when the input level exceeds the certain level, the amplifier gain decreases to keep the modulator input level constant, i.e., to keep the IF output constant.

The MIC gain control in SSB and AM modes is used to adjust the maximum gain of the AGC amplifier in the 40dB range. Even if the control is set maximum, the input level to the modulator is kept constant. If the PROC is OFF in SSB mode, the CAR level (TIF output level) is fixed, and the ALC effect is limited. If the PROC is ON in SSB mode, the ALC effect is adjusted by the CAR control. The microphone amplifier gain is fixed, but the speech processor input level is controlled by the AGC and then becomes the level set by the PROC control.

In FM mode, the microphone amplifier sensitivity can be changed to high or low by using Menu No.61. Since the frequency deviation is limited by the TX-AGC, it is not distorted extremely like in the clipper method. In AM mode, the sensitivity is controlled so that modulation does not exceed 70%.

The TX-AGC is required to stabilize the DSP modulator operation. The modulator may operate without using the AGC by reduction of the gain and input level, but it cannot be completely turned OFF. Care must therefore be taken when measuring the ALC properties and frequency characteristics.

CIRCUIT DESCRIPTION

AT Unit (Auto Antenna Tuner)

When the AUTO/THROUGH switch is set to AUTO, ATA goes LOW, the AUTO/THROUGH switching relay K1 is executed, and AT is inserted to prepare for tuning. If "RX AT ON" is set in menu No.8, AT is inserted during reception. If the position of variable capacitor VC1 or VC2 is not the preset position of the band, presetting is performed. The AT tune and transmission do not occur until presetting ends.

When AT TUNE is turned on with this condition, ATS goes HIGH, the CW mode is set, and the transmission output becomes about 10W. If the SWR is lower than 1.2, the tuning is completed and auto antenna tuning ends. If the SWR is greater than 1.2, the motor control pulse duty (described later) is controlled according to the SWR.

The SWR can be set to 1.6 after AT tuning by turning menu No. 33 "TUNE WIDE" ON.

The motor speed is determined by a microcomputer. Its direction is controlled by phase comparator IC1 and amplitude comparator IC6 if the APRE is LOW, and controlled by the microcomputer if the APRE is HIGH.

■ Auto tuning mode

The transmission power from the final section via the filter section is passed through the current/voltage detection transformer L1 and L2, which use a troidal core. The current and voltage components detected here are rectified by the waveform rectification circuit consisting of D4, D7, Q1, and Q2, and then the phase is compared by IC1. The output signals ($\overline{Q}$ and Q) from pins 8 and 9 of IC1 are passed through the switch by IC2 and are applied to motor drive IC IC4. Variable capacitor VC1 is rotated by the motor M1 so that the phase difference of the voltage and current components decreases.

The voltage and current components detected by L1 and L2 are rectified by diodes D1 and D2 and are applied to the comparator of voltage comparison circuit IC6 as the amplitude component. The comparator output is passed through switch IC3. Motor M2 is driven by another motor drive IC IC5 and variable capacitor VC2 is rotated in the direction that decreases the amplitude difference of the voltage and current components.

Variable capacitor VC1 for capacity adjustment is therefore controlled so that the current and voltage phases match. Variable capacitor VC2 for resistance adjustment is controlled so that the current and voltage amplitude difference decreases. SWR becomes 1 when the phases match and the amplitude difference is zero.

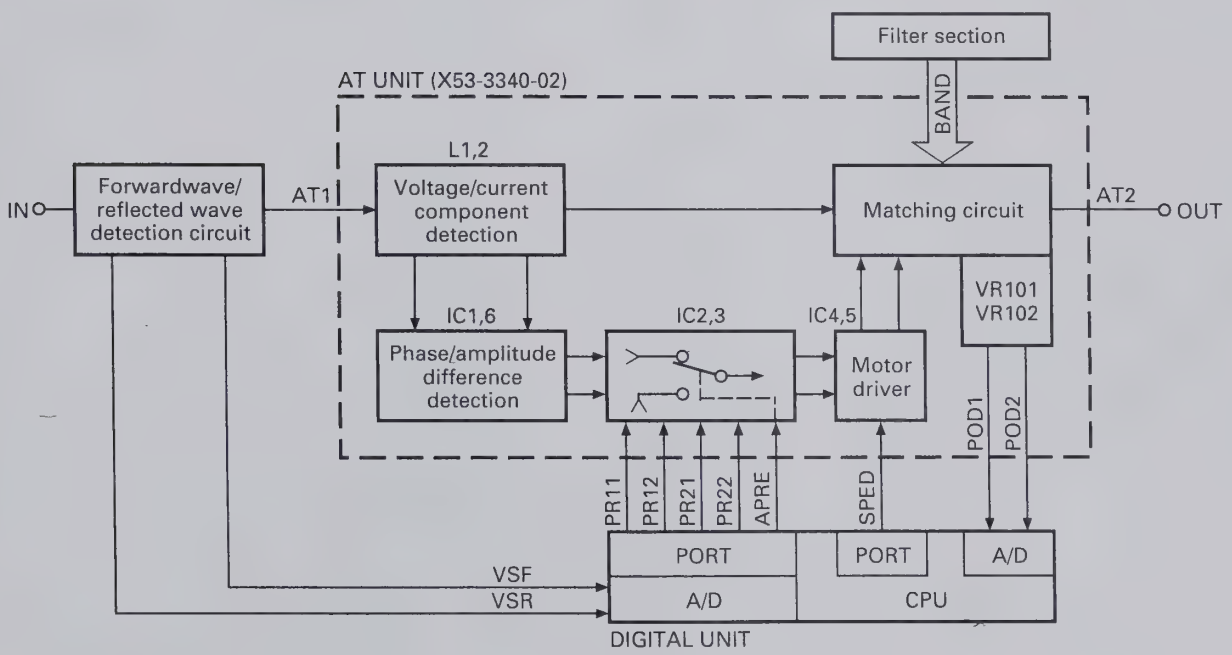

Fig. 9 AT unit block diagram

CIRCUIT DESCRIPTION

The speeds of motors M1 and M2 are determined by the duty cycle of the pulse input to control input pin 8 of IC4 and IC5, and controlled by the standing wave ratio (SWR) calculated by the control unit CPU.

Pulse signal SPED output from the control unit is passed through Q5 : DTC114EK, amplified by Q4, and input to IC4 and IC5 as a control pulse.

If the SWR is 2 or more, the duty cycle of the motor drive voltage pulse is 100%. If the SWR is 1.5 to 2, the duty cycle becomes approx. 80%. If the SWR is less than 1.5, the duty ratio becomes approx. 50% and the motor runs at low speed.

The matching circuit is T type, and the tap position from 1.8 to 30MHz is switched by seven relays K101 to K103 and K105 to K108.

Position detection volumes VR101 and VR102 are linked to the rotation axes of variable capacitors VC1 and VC2 with a gear ratio of 1 : 1. The voltages of 0 to 5V (POD1 and POD2) are generated according to the capacities of the variable capacitors. This position voltage data is sent to the microprocessor in the control unit through the analog to digital converter, and is used as the reference voltage in the feedback control system, such as for preset tuning. The same signal is also used for presetting data and end-detection.

The volume used by the TS-870S is a normal one, not an endless one. Since the rotation angle of this volume is limited, the rotation range is from the minimum capacity to the maximum capacity plus allowance.

By this control, like the preset tuning, which will be described later, POD1 and POD2 are monitored by the microprocessor. If the lower limit voltage of 0.6V or the upper limit voltage of 4.2V is reached, the microprocessor detects that the voltage is close to a limit. To return the voltage to the opposite side, APRE is made HIGH. If the variable capacitor is VC1, and the voltage is close to the lower limit in respect to POD1, the voltage near the upper limit is output. If the voltage is close to the upper limit in respect to POD1, the voltage near the lower limit is output.

The other variable capacitor VC2 outputs the voltage read by POD2 as it is. If the variable capacitor voltage exceeds the specified limit, it returns to the other limit. The other variable capacitor remains in the same position.

If the APRE is HIGH, the motor rotation direction is determined by the CPU unless auto tuning is performed.

The logic for PR11 to PR22 is the same as for IC4 and IC5 : BA6109U2. The signal output from the digital unit passes through IC2 and IC3 : TC4066BP and enters IC4 and IC5.

		PR11	PR12	PR21	PR22
Motor 1	Normal rotation	H	L	–	–
	Reverse rotation	L	H	–	–
Motor 2	Normal rotation	–	–	H	L
	Reverse rotation	–	–	L	H

■ Preset tuning

When tuning ends, the position of the variable capacitor is stored in memory by the microprocessor as preset data for that band.

When the band is changed after tuning is performed in another band, APRE goes HIGH, the motor is controlled by the microprocessor, and preset tuning is performed. During preset tuning, auto tuning or signal transmission is inhibited even if the AT TUNE switch is pressed or transmission becomes ready.

The initial preset-data when the microprocessor is reset includes standard data for a 50-ohm load on each band.

■ Preset memory band

30kHz ≤ f
1.850MHz ≤ f
2.010MHz ≤ f
3.525MHz ≤ f
3.575MHz ≤ f
3.725MHz ≤ f
4.490MHz ≤ f
7.030MHz ≤ f
7.100MHz ≤ f
7.490MHz ≤ f
10.490MHz ≤ f
14.100MHz ≤ f
14.490MHz ≤ f
20.990MHz ≤ f
21.150MHz ≤ f
21.990MHz ≤ f
25.490MHz ≤ f
29.000MHz ≤ f

CIRCUIT DESCRIPTION

Standby Control and Timing

Standby control and timing are carried out by using software for the main CPU in the control unit (X53-356X-XX). The control signals for the control unit are listed below. (See Figure 10 for each timing chart.)

SS : Standby switch input signal. Active LOW.
KEY : Keying input signal from the keyer. Active LOW.
TXC : Transmission output signal. Active HIGH. Same timing as TXB.
RXC : Reception output signal. Active HIGH. Same timing as RXB.
CKY : Output signal. Active HIGH.

With the SS line

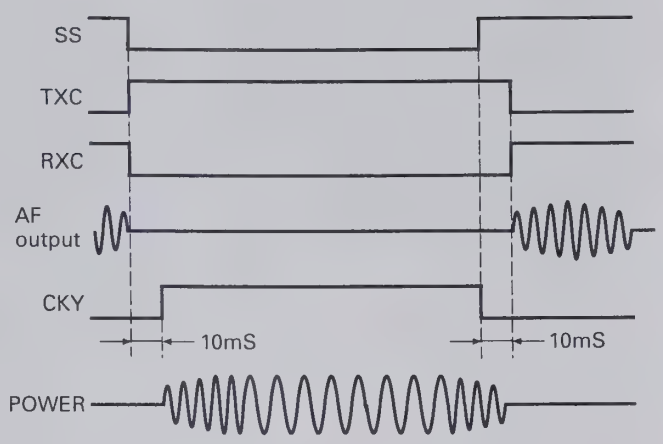

By full break-in

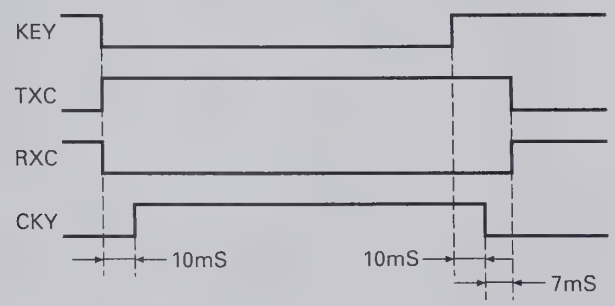

by semi break-in

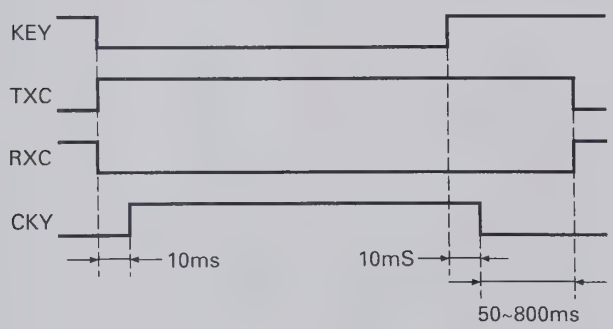

Fig. 10 Transmit/receive signal timing chart

CIRCUIT DESCRIPTION

Digital Control Unit

The TS-870S digital control circuit has a multiple chip configuration centered around the main CPU (IC6 : M37702S4BFP), and consists of a 64K ROM (IC12 : 27C512RJLVC), an 8K RAM (IC8 : LC3564QME-10), and an extended I/O (IC16, IC22, IC23 : CXD1095Q). This circuit controls about 60 different input and about 80 different output signals.

Figure 11 is a digital control block diagram.

■ Address control

The main CPU operates in the microprocessor mode in which the external ROM is used. The memory is configured as shown in the memory map, and the main CPU A12 to A15 and D0 signals and IC14, IC17, IC18, and IC19 are used to generate a chip select (CS) signal to select and access an IC. (Figure 12)

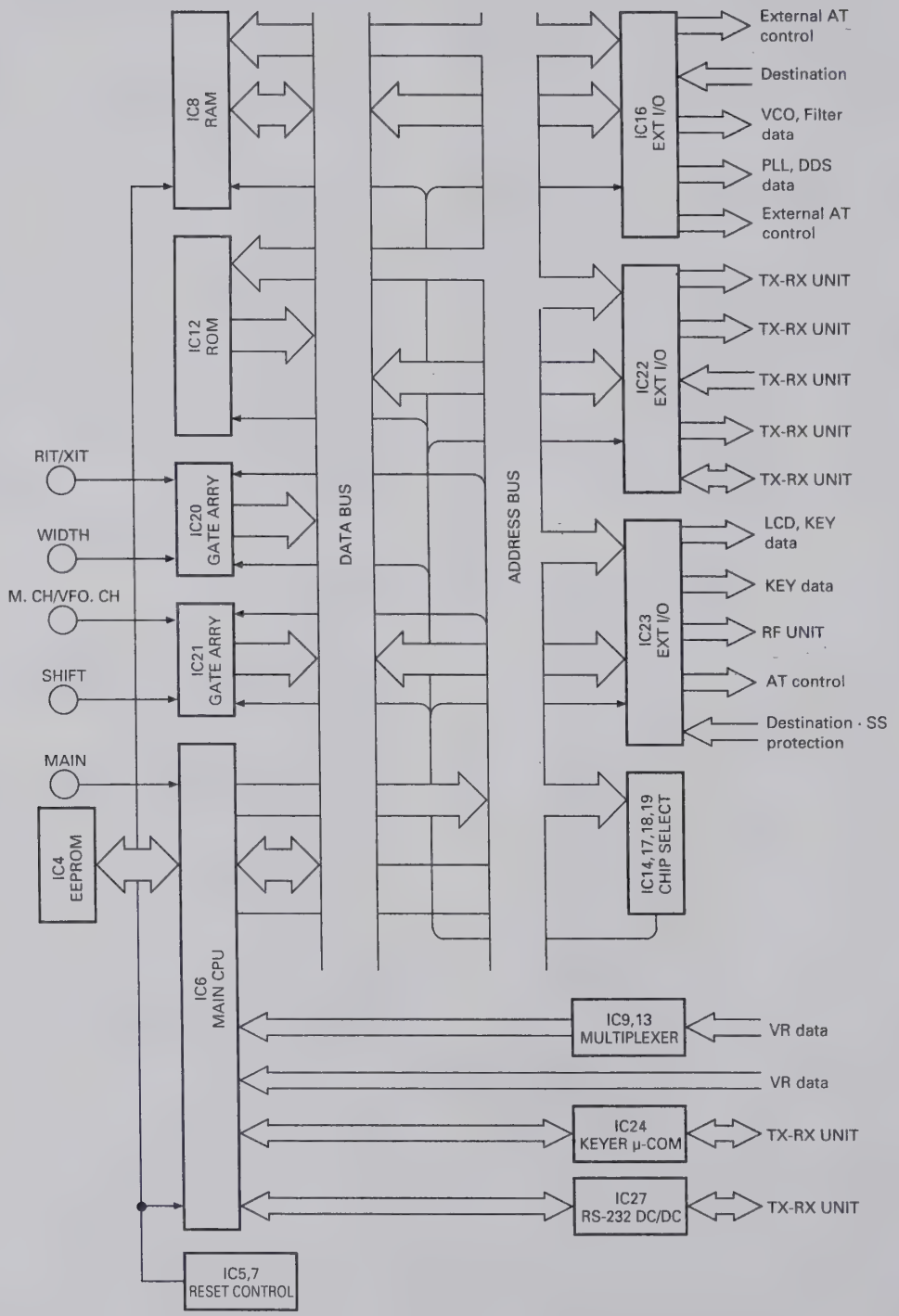

Fig. 11 Digital control block diagram

CIRCUIT DESCRIPTION

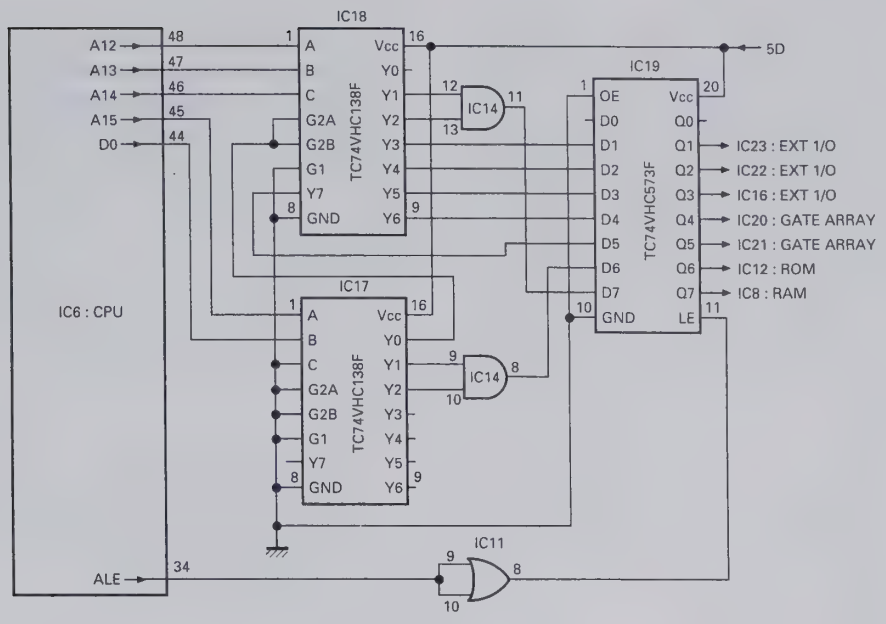

Fig. 12 Address control circuit

■ Encoder circuit

The main encoders are magnetic rotary encoders, and the click, RIT, SHIFT, and WIDTH encoders are contact-type rotary encoders.

The main encoder pulses are read directly by the main CPU.

The other encoder pulses enter the gate array (IC20 and IC21 : LZ92K371), and are read through the main CPU data bus. The gate array is selected by the latch (IC19 : TC74VHC573F) Q4 and Q5. The CK1, CK2 or CK3, CK4 encoder is selected by A0 of the gate array. Encoder data is output to D0 to D7 by making the read signal (RD) LOW when the chip select (CS) signal is LOW. IC25 and IC26 absorb encoder pulse chattering. (Figure 13)

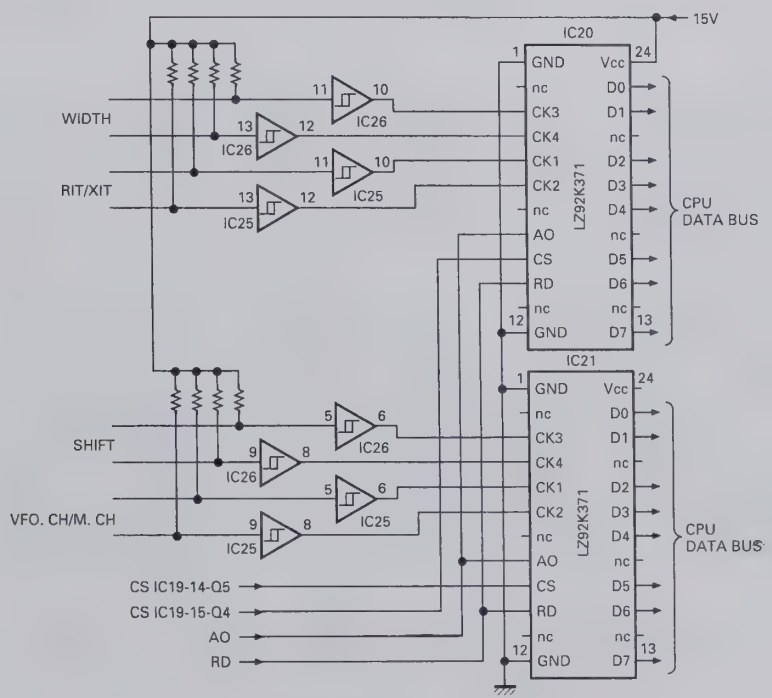

Fig. 13 Encoder circuit

CIRCUIT DESCRIPTION

■ System reset and RAM backup

The power monitor circuit (Q1, Q2, D4, D5, R6) monitors the power supply voltage. If the voltage is LOW, the circuit outputs a LOW signal to the INT1 port of the main CPU and the IRQ2 port of the microprocessor in order for the electronic keyer to stop operation. At the same time, the battery backup IC (IC5 : MB3780A) backs up the RAM with a lithium battery.

If the power supply voltage becomes normal, a HIGH signal is input to the INT1 port and the IRQ2 port, and the main CPU is initialized by the battery backup IC after the time constant set by C56 and C57. The operation resumes and power is supplied to the RAM from the outlet. (Figure 14)

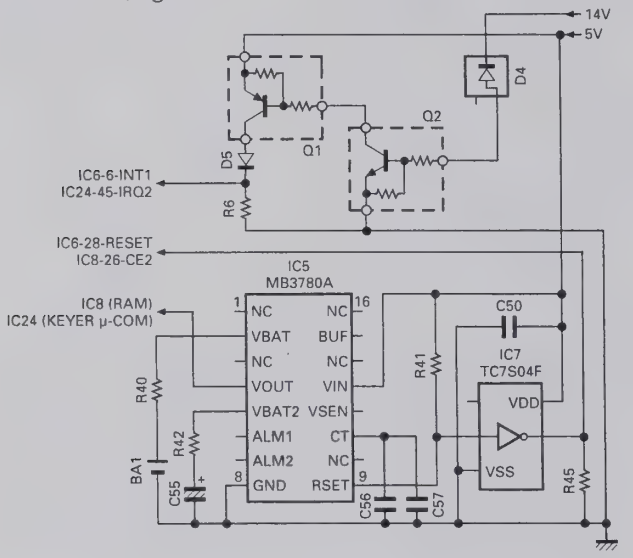

Fig. 14 System reset and RAM backup

■ Analog Signal Input

The main CPU incorporates an 8-channel analog-to-digital (A/D) converter, and in addition, has a multiplexer (IC9 and IC13 : TC4052BF) for entering 16-channel analog signals. Incoming analog signals are converted by the main CPU to digital values, which are used as digital data.

■ Display

Since the TS-870S uses a negative LCD and a fluorescent display tube.

The LCD is lighted with half a duty by the LCD driver, and the fluorescent display tube is lighted by an inverter.

The LCD driver data is set by the clock signal (UCK1), data signal (UDA1), and enable signals (ENL2, ENL3). The blanking signal (BLANK) turns the LCD driver OFF, and the dimmer signal (DIM) changes the inverter duty for dimmer.

■ Key scan

The PB0 and PB7 of IC23 and O2 to O8 of IC501 form a keyboard matrix. A key scan signal (a negative pulse) is output from the O2 to O8. One column corresponding to the PB0 and PB7 is selected, and the state of that switch is read. When the switch at the intersection of the matrix is pressed, the PBx port bit goes LOW. Thus, which switch is pressed can be detected. The key chattering is eliminated by software. (Figure 15)

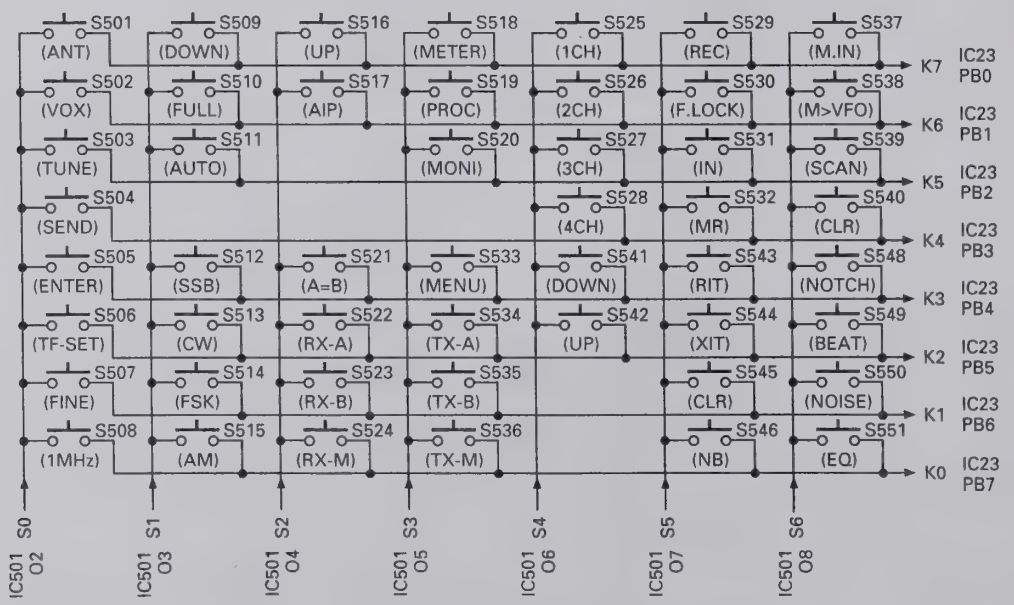

Fig. 15 Key scan circuit

CIRCUIT DESCRIPTION

■ PLL and DDS data

The TS-870S has three PLLs and three DDSs in the PLL section in the RF unit. The main CPU sends data to the PLL ICs and DDS ICs according to the displayed frequency. The PLL ICs provide unlock (UNL) signals. If one of the PLLs should unlock, the display indicates that the PLL is unlocked (Err-FE).

The TX-RX unit also has a PLL IC, to which the main CPU sends 46.32MHz data. The PLL IC also outputs an unlock signal (PLUL), and if a PLL is unlocked, an unlock message (Err-FD) is displayed.

■ AT control

The AT control inputs the variable capacitor position data (POD1, POD2, analog data input), forward wave voltage and reflected wave voltage (VSF, VSR, analog data input) for SWR calculation in the main CPU, and outputs the motor normal/reverse rotation control (PR11, PR12, PR21, PR22), motor speed control signal (SPED), and motor control switching signal (APRE).

SPED switches the motor rotation ON and OFF during AT tune and presetting by PWM with the duty cycle related to the SWR value.

APRE changes the motor normal/reverse rotation control to analog control for AT tune, and to digital control for presetting.

PR11 to PR22 control the motor normal/reverse rotations and stop when the motor normal/reverse control signal is controlled digitally. (Figure 16)

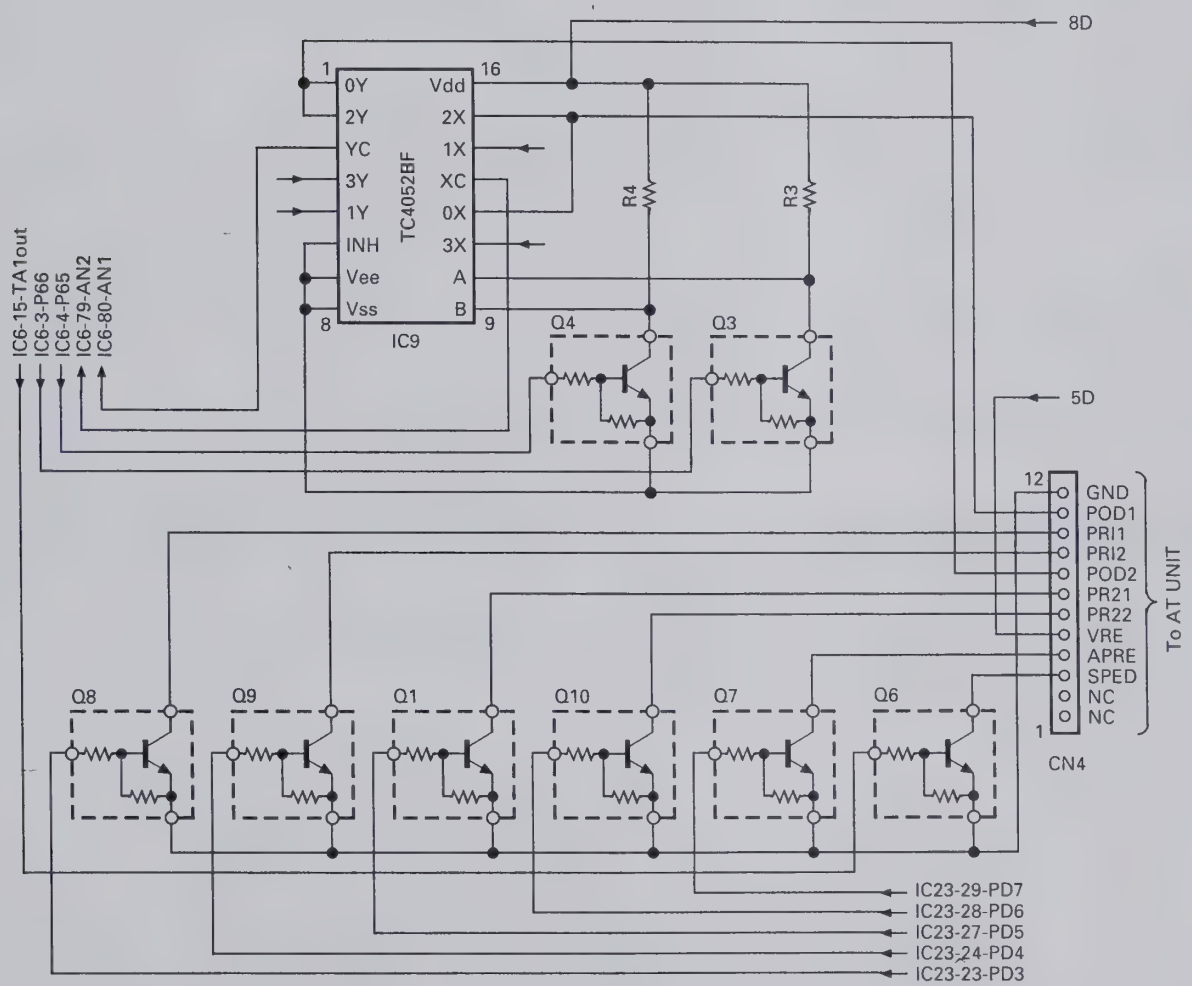

Fig. 16 AT control

CIRCUIT DESCRIPTION

■ IF filter switching

The IF filter switching signal from the control unit is controlled by PC0 to PC2 (pins 11 to 13) of IC23 and sent to the RF unit and final unit connection section.

The RF unit selects the 8.83MHz IF filter, and the final unit connection section selects the 455kHz IF filter.

The IF filter select signal is automatically interlocked with the WIDTH control.

SSB		CW		FSK		AM		FM	
WIDTH	IF FILTER	WIDTH	IF FILTER	WIDTH	IF FILTER	WIDTH	IF FILTER	WIDTH	IF FILTER
1.4k	3k	50	3k	250	3k	5.0k	6k	5.0k	15k
1.6k	↑	200	↑	500	↑	6.0k	15k	6.0k	↑
1.8k	↑	300	↑	1.0k	↑	8.0k	↑	8.0k	↑
2.0k	↑	400	↑	1.5k	↑	10.0k	↑	10.0k	↑
2.2k	↑	600	↑			12.0k	↑	12.0k	↑
2.4k	↑	1.0k	↑			14.0k	↑	14.0k	↑
2.6k	6k								
2.8k	↑								
3.0k	↑								
3.2k	↑								
3.4k	↑								
4.6k	↑								
6.0k	15k								

Table 9 IF filter selection

■ Receive band-pass filter selection

The RF BPF signal from the control unit is sent from PC6 (pin 17) of IC23 to the RF unit as serial data. The serial-to-parallel converter (TC9174F) in the RF unit converts serial data to parallel data and switches between band-pass filters.

■ Transmit low-pass filter selection

The LPF signal from the control unit is sent as serial data from PC1 (pin 12) of IC16 to the final unit filter section via the final unit connection section. The serial-to-parallel converter (TC9174F) in the final unit filter section converts serial data to parallel data and switches between low-pass filters.

■ PLL VCO data

The RF unit PLL section switches between VCOs according to the VCO band data (VB0 to VB3) output from PC4 to PC7 (pins 15 to 18) of IC16 in the control unit.

■ Electronic keyer

The TS-870S uses a dedicated IC (IC24 : 68HC05G2419553) to control the electronic keyer. The main CPU CH1 to CH4 signals switch operations to the electronic keyer IC (keyer microprocessor).

The keyer microprocessor controls the electronic keyer according to KEY SPEED VR data, DOT/DASH signal, and CH1 to CH4 signals switch operation signals from the main CPU.

The keyer microprocessor is normally at the standby mode (power save mode). Each control signal is connected to PB7 (pin 77). When this port is LOW, the standby mode is terminated.

When the standby mode is cancelled, PA7 (pin 30) outputs a HIGH signal. It is used to determine which control signal is active : CH1 to CH4, KEY SPEED VR data, or DOT/DASH signal.

PA2 (pin 25) is an input/output port that inputs KEY SPEED VR data and outputs control signal (HIGH) for VR data determination.

When a HIGH signal is output from PA2 (pin 25), C114 is charged. KEY SPEED VR data is calculated until C114 is discharged and the port goes LOW.

IRQ2 (pin 41) is an interrupt port that detects power supply voltage drop. When this port detects it, the standby mode is entered.

The keyer microprocessor outputs the key down and beep signals. The key down signal is input to IC22 (PC4 : pin 15), and the main CPU controls transmission and reception. The beep signal is input to IC29 (TC7S32F : OR gate) and output to the TX-RX unit as CKY.

The TX-RX unit determines the key jack ON/OFF and CKY level and outputs sidetone.

CIRCUIT DESCRIPTION

■ Band data

Frequency (MHz)		RF BPF (RB)		LPF	VCO				PLL
Lower limit	Upper limit	RX	TX		A	B	C	D	N
0.01	0.49	1	1	1	1	0	0	0	38
0.49	0.99	2	2						38
0.99	1.705								37
1.705	2.01	3	3						37
2.01	2.49			2					36
2.49	2.99	4	4						36
2.99	3.49								35
3.49	3.99								35
3.99	4.49	5	5						34
4.49	4.99			3					34
4.99	5.49								33
5.49	5.99								33
5.99	6.49								32
6.49	6.99								32
6.99	7.3	6	6						31
7.3	7.49	7	7						31
7.49	7.99			4	0	1	0	0	31
7.99	8.49								30
8.49	8.99								30
8.99	9.49								29
9.49	9.99								29
9.99	10.49								28
10.49	10.99	8	8	5					28
10.99	11.49								27
11.49	11.99								27
11.99	12.49								26
12.49	12.99								26
12.99	13.49								25
13.49	13.99								25
13.99	14.35	9	9						24
14.35	14.49	10	10						24
14.49	14.99			6	0	0	1	0	24
14.49	15.49								23

Frequency (MHz)		RF BPF (RB)		LPF	VCO				PLL
Lower limit	Upper limit	RX	TX		A	B	C	D	N
15.49	15.99	10	10	6	0	0	1	0	23
15.99	16.49								22
16.49	16.99								22
16.99	17.49								21
17.49	17.99								21
17.99	18.49								20
18.49	18.99								20
18.99	19.49								19
19.49	19.99								19
19.99	20.49								18
20.49	20.99								18
20.99	21.49	11	11						17
21.49	21.99	12	12		0	0	0	1	17
21.99	22.49			7					16
22.49	22.99								16
22.99	23.49								15
23.49	23.99								15
23.99	24.49								14
24.49	24.99								14
24.99	25.49								13
25.49	25.99			8					13
25.99	26.49								12
26.49	26.99								12
26.99	27.49								11
27.49	27.99								11
27.99	28.49								10
28.49	28.99								10
28.99	29.49								9
29.29	29.99								9
29.99	30								9

CIRCUIT DESCRIPTION

■ Function of IC pins

1) CPU : M37702S4BFP (Control unit IC6)

Pin No.	Port name	Pin name	I/O	Function	Active level	Initial state
1	AN0	ADR0	I	VPRC, VMON, VAGC signal		
2	P67	RES	O	Reset signal output	L	H
3, 4	P66, P65	CTB, CTA	O	Analog switch select control signal B, A	H	H
5	INT2	PSW	I	Power switch inhibit signal	H	
6	INT1	BOVR	I	14V voltage drop inhibit signal		
7	INT0		I	Unused		
8, 9	TA4IN, TA4OUT	EDP1, EDP2	I	Main encoder pulse input		
10, 11	TA3IN, TA3OUT		O	Unused		L
12, 13	TA2IN, TA2OUT		O	Unused		L
14	P53	AMUT	I	AF mute signal	L	H
15	TA1OUT	SPED	O	AT motor speed control	L	H
16	P51	LCD	O	LCD and LED serial data		H
17	P50	LCK	O	LCD and LED serial clock		H
18	P47	BLK	O	LCD all off control signal	H	L
19	P46	RBK	O	RF mute signal	L	L
20	P45	14VSW	O	Power on control signal	H	H
21	P44	ECS	O	EEPROM clock		H
22	P43	EED	I/O	EEPROM data		
23	PHI			Unused		
24	RDY		I	Bus wait cancel	H	
25	HORD		I	Hold state cancel	H	
26	BYTE		I	External data bus width 8 bit setting	H	
27	CNVss		I			
28	RESET		I	Reset signal input	L	
29, 30	Xin, Xout		I	Clock signal input		
31	E		O			
32	Vss		I			
33	HLDA					
34	ALE		O			
35	BHE					
36	R/W		O	Read/write signal		
37~44	D7~D0		I/O	Bus		
45~60	A15~A0		O	Address output		
61~64	P87~P84	PB0~PB3	O	Logic key CPU control 0~3	H	L
65	TXD0	TXD0	O	Personal computer interface serial output		H
66	RXD0	RXD0	I	Personal computer interface serial input		
67	P81	RTS0	O	Personal computer interface RTS	H	L
68	CTS0	CTS0	I	Personal computer interface CTS		
69	Vcc		I			
70	AVcc		I			
71	Vref		I			
72	AVss		I			
73	Vss		I			
74	AN7	ADR7	I	Forward wave voltage (VSF)		
75	AN6	ADR6	I	Reflected wave voltage (VSR)		
76	AN5	ADR5	I	ALC meter analog input		
77	AN4		I	Unused		
78	AN3	ADR3	I	VPWR, VMIC, VDLY, VCAR signal		
79	AN2	ADR2	I	POD2, VRF, POD2, VAF signal		
80	AN1	ADR1	I	POD1, VNB, POD1, VSQL signal		

CIRCUIT DESCRIPTION

2) CPU : 68HC05G2419553 (Control unit IC24)

Pin No.	Port name	Pin name	I/O	Function	Active level	Initial state
1	VDD		I			
2~5	PB3~PB0		I	CH4 to CH1 switch input signal from IC6		
6~13	AD0~AD7		I	Unused		
14	VrefH			Unconnected		
15	VrefL		I			
16	Vss		I			
17	VDD		I			
18, 19	XOSC1, XOSC2		I	Unconnected		
20	RES		I	Reset signal input		
21, 22	OSC1, OSC2		I	Clock input		
23	PA0	DOT	I	DOT input		
24	PA1	DASH	I	Dash input		
25	PA2	SPEED VR	I/O	KEY VR data determine port		
26~29	PA3~PA6		I	Unused		
30	PA7	int contro	O	Inhibit determine control signal	H	
31~33	PG0~PG2		I	Unused		
34	TCMP		I	Unconnected		
35	PG4		I	Unused		
36	PG5	EBSY	I	Unused		
37	PG6	MBSY	I	Unused		
38	PG7		I	Unused		
39~44	PC0~PC5		I	Unused		
45	IRQ2	sleep	I	14V voltage drop determine inhibit port		
46	PC7		I	Unused		
47	VDD		I			
48	PD0		I	Unused		
49	PD1	mbusy	O	Message busy signal		
50	PD2		I	Unused		
51	PD3	pbc	O	Beep output signal		
52	PD4		I	Unused		
53	PD5	KEY	O	Key signal output		
54	PD6		I	Unused		
55	PD7		I	Unconnected		
56~59	PE0~PE3		I	Unused		
60	Vss		I			
61~64	PE4~PE7		I	Unused		
65~72	PH0~PH7		I	Unused		
73~76	PJ0~PJ3		I	Unused		
77	PB7	WAKE UP	I	Wake up inhibit		
78~80	PB6~PB4		I	Unused		

CIRCUIT DESCRIPTION

3) Extended I/O : CXD1095Q (Control unit IC16)

Pin No.	Port name	Pin name	I/O	Function	Active level	Initial state
1, 2	NC					
3~7	PB1~PB5	SHIMO1~SHIMO5	I	Destination determine port	H	
8	PB6	50W	I	50W switch signal	L	
9	PB7	UNL	I	Unlock signal	H	
10	Vss		I			
11	PC0	ENF1	O	Serial/parallel convert enable	H	L
12	PC1	UDA23	O	Serial/parallel convert data		L
13	PC2	UCK23	O	Serial/parallel convert clock		L
14	PC3	NFMT	O	Control signal except FM transmit mode	L	H
15, 16	PC4, PC5	VB3, VB2	O	VCO band data	H	L
17	PC6	VB1	O	VCO band data	H	H
18	PC7	VB0	O	VCO band data	H	L
19	NC					
20	PD0	PLE2	O	VCO2 enable	H	L
21	PD1	PLE1	O	VCO1 enable	H	L
22	PD2	PCK	O	PLL clock		L
23	PD3	PDA	O	PLL data		L
24	PD4		O	Unused		L
25	Vss		I			
26	VDD		I			
27	PD5	DLE3	O	DDS3 enable	H	L
28	PD^	DLE2	O	DDS2 enable	H	L
29	PD7	DLE1	O	DDS1 enable	H	L
30~32	D0~D2		I/O	Bus		
33, 34	NC					
35~39	D3~D7		I/O	Bus		
40	CLR		I	Port E output register clear	L	
41	ODEN		I	Output disable	L	
42	Vss		I			
43	WR		I	Write signal	L	
44	RD		I	Read signal	L	
45	CS		I	Chip select signal	L	
46~48	A0~A2		I	Address signal		
49	PE0	P TTI	I	External AT TT input	H	
50	PE1	P TSI	I	External AT TS input	H	
51	NC					
52	PE2	MBSY	I	Electronic keyer busy signal		
53	PE3		I	Unused		
54	PA0	P TTO	O	External AT TT output	H	L
55	PA1	P TSO	O	External AT TS output	H	L
56	PA2		O	Unused		L
57	Vss		I			
58	VDD		I			
59~62	PA3~PA6		O	Unused		L
63	PA7	LOGKEY	O	Electronic keyer reset	H	L
64	PB0	SHIMO0	I	Destination determine port	H	

CIRCUIT DESCRIPTION

4) Extended I/O : CXD1095Q (Control unit IC22)

Pin No.	Port name	Pin name	I/O	Function	Active level	Initial state
1, 2	NC					
3~9	PB1~PB7		I/O	DSP bus		
10	Vss		I			
11	PC0		I	Unused		
12	PC1	KEYS	I	Electronic keyer connecting determine signal	L	
13	PC2	MD	I	Microphone UP switch signal	L	
14	PC3	MU	I	Microphone DOWN switch signal	L	
15	PC4	KEYI	I	Key input signal	L	
16	PC5	PLUL	I	PLL unlock in DSP	L	
17	PC6	EOM	I	DRU-3 EOM signal	H	
18	PC7	VBSY	I	VS-2 busy signal	L	
19	NC					
20	PD0	DRST	O	DSP reset signal Normally "H"	L	H
21	PD1	VCEN	O	Electronic volume DAC enable	L	H
22	PD2	UCK22	O	Serial/parallel convert clock signal		L
23	PD3	UDA22	O	Serial/parallel convert data signal		L
24	PD4	DREN	O	DRU-3 enable signal	L	H
25	Vss		I			
26	VDD		I			
27	PD5	PLEN	O	PLL enable in DSP	H	L
28	PD6	STR	O	VS-2 start signal	H	L
29	PD7		O	Unused		L
30~32	D0~D2		I/O	Bus		
33, 34	NC					
35~39	D3~D7		I/O	Bus		
40	CLR		I	Port E output register clear	L	
41	ODEN		I	Output disable	L	
42	Vss		I			
43	WR		I	Write signal	L	
44	RD		I	Read signal	L	
45	CS		I	Chip select signal	L	
46~48	A0~A2		I	Address signal		
49	PE0	HENA	O	DSP enable A	L	H
50	PE1	HENB	O	DSP enable B	L	H
51	NC					
52	PE2	HRW	O	DSP R/W signal		H
53	PE3		O	Unused		L
54~56	PA0~PA2		O	DSP address signal		L
57	Vss		I			
58	VDD		I			
59	PA3		O	Unused		L
60	PA4	P BEEP	O	Beep output signal	H	L
61	PA5	P CKY	O	Transmit output control signal	H	L
62	PA6	P RXC	O	Receive control signal	H	H
63	PA7	P TXC	O	Transmit control signal	H	L
64	PB0		I/O	DSP bus		

CIRCUIT DESCRIPTION

5) Extended I/O : CXD1095Q (Control unit IC23)

Pin No.	Port name	Pin name	I/O	Function	Active level	Initial state
1, 2	NC					
3~9	PB1~PB7	P K1~P K7	I	Key matrix input	L	
10	Vss		I			
11	PC0	6KFIL	O	Analog filter select signal	H	L
12	PC1	3KFIL	O	Analog filter select signal	H	H
13	PC2	15KFIL	O	analog filter select signal	H	L
14~16	PC3~PC5	P ENR3~P ENR1	O	RF serial/parallel convert enable	H	L
17	PC6	P UDA21	O	Serial/parallel convert data		L
18	PC7	P UCK21	O	Serial/parallel convert clock		L
19	NC					
20~22	PD0~PD2		O	Unused		L
23	PD3	P APRE	O	AT motor control signal		L
24	PD4	P PR22	O	AT motor 2 control signal		L
25	Vss		I			
26	VDD		I			
27	PD5	P PR21	O	AT motor 2 control signal		L
28	PD6	P PR12	O	AT motor 1 control signal		L
29	PD7	P PR11	O	AT motor 1 control signal		L
30~32	D0~D2		I/O	Bus		
33, 34	NC					
35~39	D3~D7		I/O	Bus		
40	CLR		I	Port E output register clear	L	
41	ODEN		I	Output disable	L	
42	Vss		I			
43	WR		I	Write signal	L	
44	RD		I	Read signal	L	
45	CS		I	Chip select signal	L	
46~48	A0~A2		I	Address signal		
49	PE0	P THP	I	Thermal protection signal	H	
50	PE1	P SS	I	Microphone PTT switch signal	L	
51	NC					
52	PE2		I			
53	PE3		O	Unused		L
54	PA0	P DIM	O	Dimmer control signal	H	H
55, 56	PA1, PA2	P ENL3, P ENL2	O	LCD driver enable signal	H	L
57	Vss		I			
58	VDD		I			
59	PA3	P LATC	O	AT LED	H	L
60, 61	PA4, PA5	P ENL1, P ENL4	O	Switch serial/parallel convert enable	H	L
62, 63	PA6, PA7		O	Unused		L
64	PB0	P K0	I	Key matrix input	L	

CIRCUIT DESCRIPTION

TX-RX Unit (DSP Operation)

■ Outline

The TS-870S uses the DSP to carry out various processing as compared with the conventional models. They include the following:

- Modulation and demodulation
- Filter processing
- AGC processing (S-meter data output)
- Mic amplifier AGC processing
- VOX processing
- Voice equalizing processing
- Noise processing (noise reduction, beat cancel, automatic notch)
- Speech processing (COMP meter data output)
- Squelch processing
- Sidetone and beep generation

The commands and data for the microprocessor are listed below (see page 42).

The TX-RX unit circuits are divided into the analog section that processes analog signals and digital section that processes digital data. The interface between the analog and digital sections is the analog-to-digital converter (IC25 : AK5340-VS) and digital to analog converter (IC16 and IC27 : AK4318-VS, IC34 : PCM69AU).

The unit has another digital to analog converter (IC26 : M62363FP) for VCA (electronic volume : M51131L) control. The volume is controlled directly by the microprocessor in the control unit (the volume is not controlled by the DSP).

■ Digital section

The digital section is explained below. Figure 17 is a digital section block diagram.

The digital section consists of two DSPs (IC1 and IC2 : DSP56002FC40), RAM (IC7 : MCM56824AFN2*), three ROMs (IC4, IC5, IC6 : 27C256PCJJ**), and gate array (IC3 : MBCG24173-6173) and PLD (IC9 : 7032LC44JLQ*). The TX-RX unit has a PLL, but it is included in the digital section for convenience. * indicates the version number.

The PLL in the TX-RX unit is controlled directly by the microprocessor in the control unit, and clocks of a fixed frequency of 46.32MHz are generated. This circuit forms a VCO consisting of Q8 : 2SK210(GR), Q9 and Q10 : 2SC2714(Y). Q8 is an oscillator and Q9 and Q10 are buffer amplifiers. Q5, Q6, and Q7 comprise an active low-pass filter. This low-pass filter converts the output from PLL IC IC15 : MB86001PF to DC voltage and sends it to the VCO.

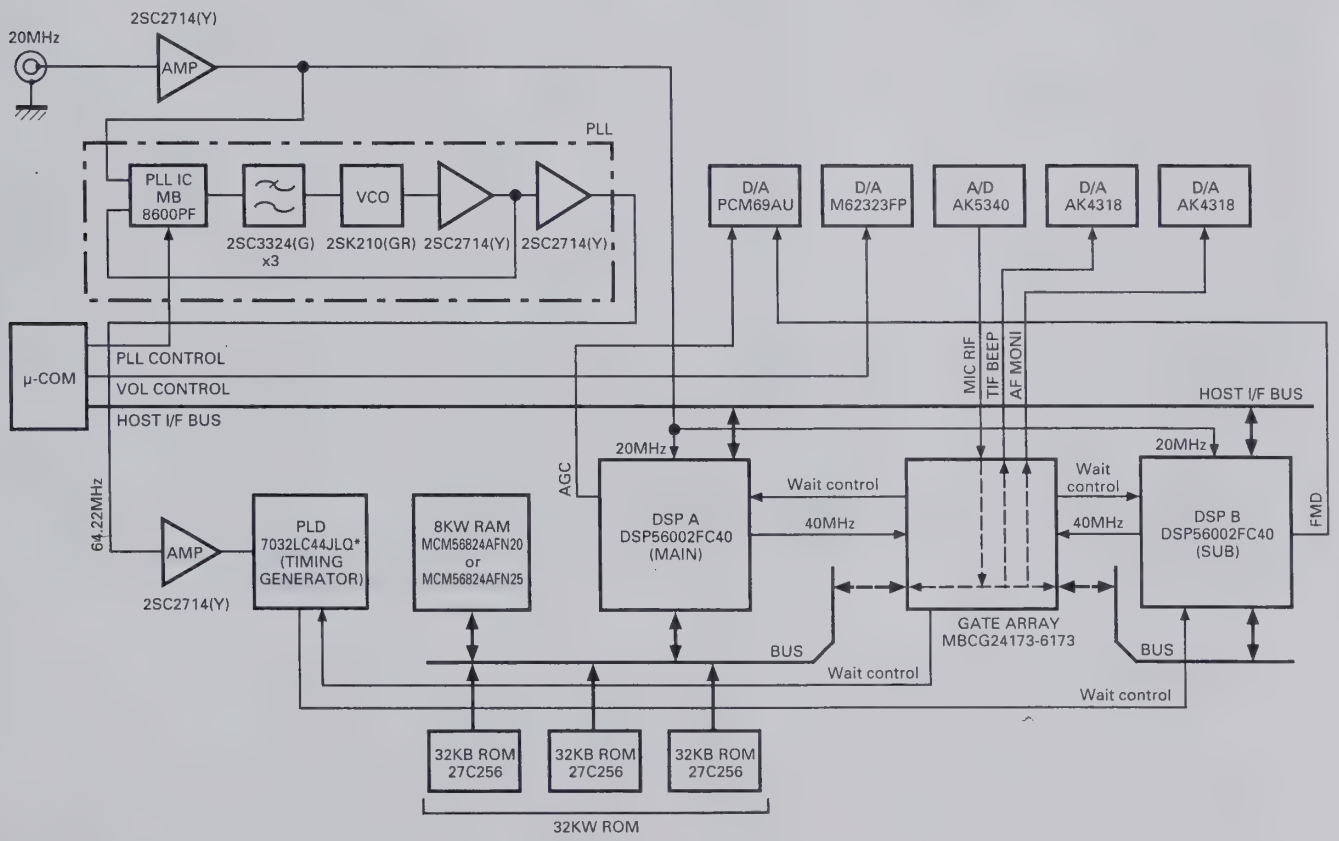

Fig. 17 Digital section block diagram

CIRCUIT DESCRIPTION

Figure 18 is a block diagram of the PLD (Programmable Logic Device). The clock with a sampling frequency fs (45.234375kHz) is generated from the 46.32MHz clock produced by the PLL in the TX-RX unit by the clock divider in the PLD. This clock is used for data transmission and reception between the analog-to-digital and digital to analog converters and gate array and data transmission and reception between the gate array, DSP, and the analog to digital and digital to analog converters. The PLD forms part of the bus control circuit for sharing the RAM and ROM with two DSPs and the circuit that accesses the ROM.

The gate array is used as the interface between the analog to digital and digital to analog converters and the DSP. Data is received from the analog to digital converter, or transmitted to the digital to analog converter, and each DSP is interrupted in the 1/fs sampling intervals. The gate array interfaces two DSPs for communication, and the two other DSPs control the bus for sharing the RAM and ROM.

The DSP has a 24 bit fixed-decimal DSP. It operates with the 40MHz clock, but the external 20MHz clock is given to the DSP. The DSP operates the 40MHz clock generated in the PLL in the IC. The clock is programmed to be output to pin 123 (CKOUT) of the DSP. Transfer of commands with the microprocessor is carried out through the host interface of the DSP.

The ROM and RAM are shared by two DSPs. When one of the DSPs is being accessed, the other DSP waits. It is carried out by the gate array and PLD. Three 8 bit ROMs are used to implement 24 bits.

The analog to digital converter (IC25 : AK5340-VS) is an 18 bit Δ-Σ type ADC for audio equipment. There are two channels, R and L. The R channel is used for the receive signal and the L channel is used for the microphone input signal. The digital to analog converter (IC16 and IC27 : AK4318-VS) is a 18 bit Δ-Σ type DAC for audio equipment. The digital to analog converter has two channels like the analog to digital converter : IC16 uses the R channel for the beep signal and the L channel for the transmit signal, and IC27 uses the R channel for the monitor signal and the L channel for the decode signal. Another digital to analog converter (IC34 : PCM69AU) is an 18 bit DAC for audio equipment, and uses the Rch for AGC and the L channel for audio signals in FM.

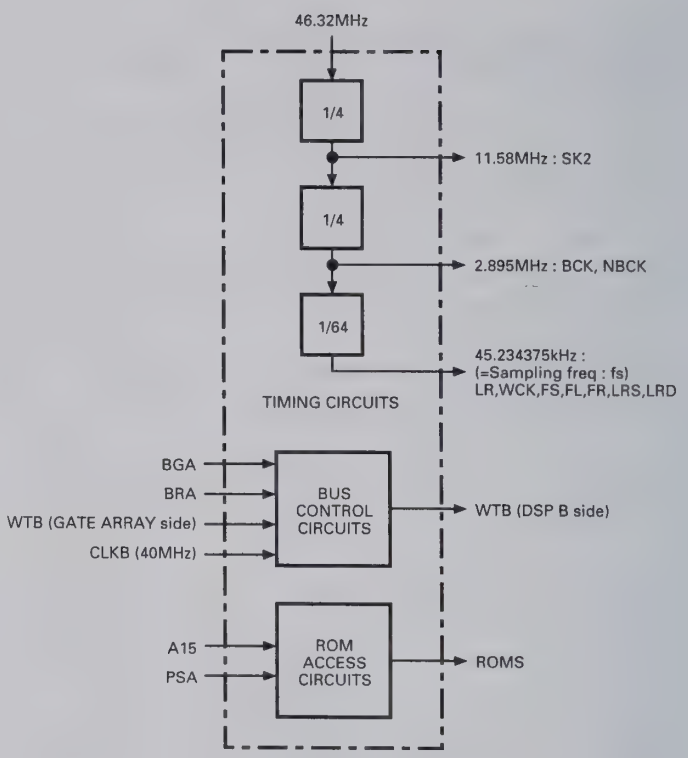

Fig. 18 PLD block diagram

■ Flow of transmit/receive signals

Flow of transmit/receive signals is explained below, together with the analog and digital sections. Flow of receive signals is explained first. See Figure 19.

The receive signal input from pin 3 (RIF) of CN1 is amplified by IC43 : NJM5532M. If a HIGH signal is input to RIF, its amplitude is limited to prevent any signal that exceeds the input range to the analog to digital converter (IC25 : AK5340-VS). The signal is passed through the band-pass filter and buffer amplifier, and its frequency is converted by the mixer (IC18 : MC74HC4053F). The frequency of the receive signal is about 1/4 of sampling frequency fs. The fs/4 frequency is the most stable frequency for digital signal processing. The receive signal of the fs/4 frequency is passed through the buffer amplifier, amplified by amplifier IC21 : NJM4560M, and converted to digital data by the analog to digital converter (IC25).

CIRCUIT DESCRIPTION

This data is read into the gate array (IC3 : MBCG 241873-6173) in sampling intervals 1/fs. The data read into the gate array is fed to the DSP in 1/fs for processing. DSP A (IC1 : DSP56002FC40) carries out auto notching, demodulation, noise processing, and squelch processing, and DSP B carries out AGC and filter processing.

AGC data, one of the DSP B operation results, is sent to the digital to analog converter (IC34 : PCM69AU) from pin 33 of DSP B (IC2: DSP56002 FC40) in 1/fs intervals. AGC data is converted to an analog current by IC34, and converted to an analog voltage by the I-V converter IC35 : AD822AR, and is output to the RF unit as the AGC voltage. The AGC voltage is reversed by the reversing amplifier IC35 : AD822AR, and the S-meter voltage used for packet communication is generated and output from the SMET terminal of ACC2 (J5).

The digital data demodulated by two DSPs is sent to the gate array in 1/fs intervals. The data is sent to the digital to analog converter (IC27 : AK4318-VS) from pin 68 of the gate array in 1/fs intervals and converted to an analog signal. The demodulate signal converted to an analog signal is passed through the third low-pass filter IC28 : NJM2100M. This low-pass filter eliminates the alias components. The demodulate signal then enters the VCA (IC29 : M51131L). The VCA attenuates and outputs the demodulate signal according to the voltage given to pin 8 of IC29. The voltage at pin 8 is the voltage corresponding to the rotational angle of the AF VOL, and is controlled by the microprocessor in the control unit. The demodulate signal is passed through the VCA, amplified by the AF amplifier (IC33 : LA4422), and output to the speaker and headphone.

Demodulation data used for packet communication is passed through low-pass filter IC28 : NJM2100M, then attenuated by the VCA IC31 : M51131L. The attenuation amount is determined by the value set on the menu. The signal is passed through the VCA and ACC2 (J5) through the buffer amplifier Q17 : 2SC 2412K(S), and output to the TNC.

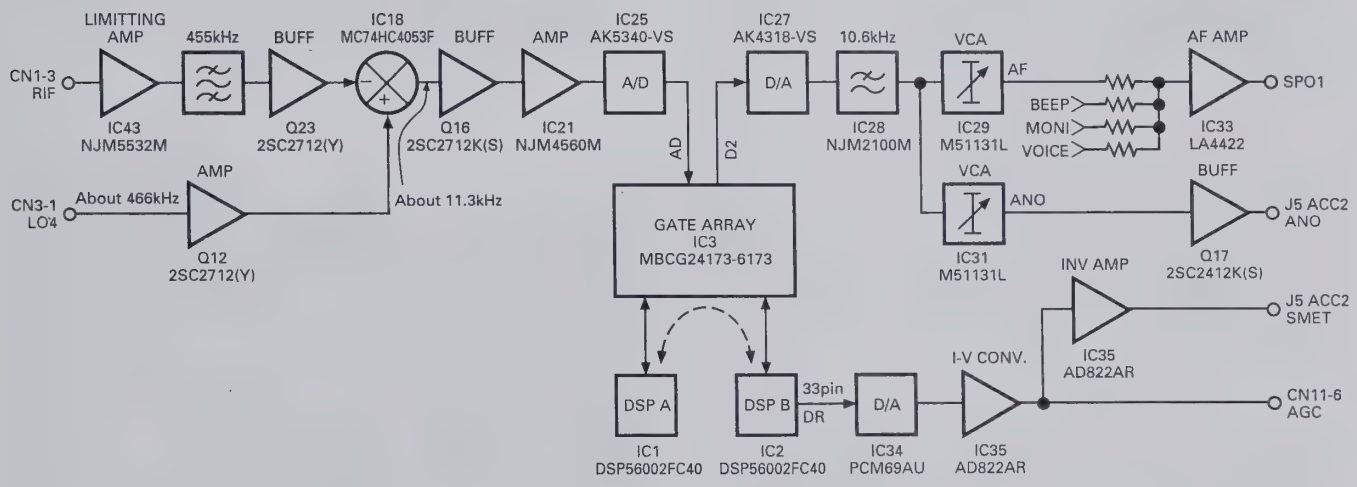

Fig. 19 Flow of receive signal

CIRCUIT DESCRIPTION

Then, flow of transmit signals is explained below. See Figure 20. If the mode is SSB, FM, or AM, the signal from the microphone is input. The signal enters the TX-RX unit through CN4. The signal is amplified by amplifier IC22 : AD822AR, and goes to the multiplexer (IC23 : MC74HC4052F). The multiplexer is used to switch between the microphone signal, the play signal from the DRU-3 (option), and packet signal. The signal passing through the multiplexer is amplified by amplifier IC24 : NJM2100M, and converted to digital data by the analog to digital converter (IC25 : AK5340-VS). The data is read into the two DSPs in the same way as for the receive signal. In transmit mode, DSP A carries out modulation, speech processing, and carrier signal generation in CW, FSK, and FM modes, while DSP B carries out VOX processing, voice equalizing processing, preemphasis processing (in FM mode), and microphone amplifier AGC processing.

The DSP does not perform modulation in FM mode. The DSP sends a 455kHz carrier signal from pin 1 (TIF) of CN1, adds subtone to the carrier signal, preemphasizes sounds, and limits the amplitude. Preemphasized audio data is sent from pin 33 of DSP A (IC1 : DSP56002FC40) to the digital-to-analog converter (IC34 : PCM69AU) in 1/fs intervals, and converted to an analog current. The analog current is converted to the audio signal of the analog voltage by the I-V converter IC36 : NJM4560M. IC36 also serves as the third low-pass filter that eliminates the alias components of the audio signal. The analog audio data signal is output from pin 3 (FMD) of CN3 to the PLL section.

The data modulated by the two DSPs (including FM carrier data) is sent to the gate array in the process as the demodulated signal. The signal is sent from pin 60 of the gate array to the digital to analog converter (IC16 : AK4318-VS) in 1/fs intervals, and converted to an analog signal. The frequency of this signal is fs/4. The analog modulated signal is passed through the third low-pass filter IC17 : NJM2100M to eliminate alias components. The signal is converted to the 455kHz IF signal by the mixer (IC18 : MC74HC4053F) and two ceramic filters (CF2 and CF3), and output from pin 1 (TIF) of CN1.

Monitor data, one of the DSP operation results, is sent to the gate array in the same process as the demodulate signal. Like the demodulate signal, the signal is sent from pin 68 of the gate array to the digital to analog converter (IC27 : AK4318-VS), and converted to an analog signal. The analog sidetone signal is passed through the third low-pass filter IC30 : NJM2100M and attenuated by VCA (IC31 : M51131L). The attenuation is determined by the rotational angle of MONI VOL. The flow of the signal after passing through the VCA is the same as for the demodulate signal.

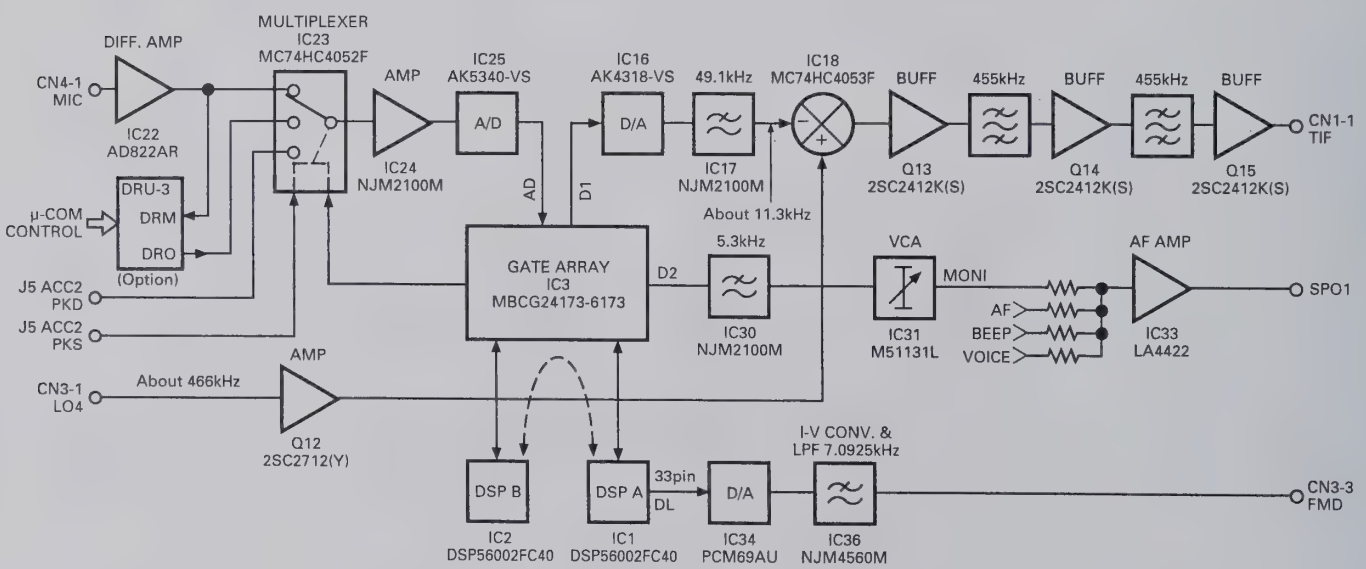

Fig. 20 Flow of transmit signal

CIRCUIT DESCRIPTION

■ Sidetone signal flow

When the electronic keyer is pressed, the sidetone is output. The sidetone is processed by DSP A. Sidetone data, a DSP A operation result, is output to the speaker or headphone in the same process as the monitor data. See Figure 21.

■ FSK tone signal flow

The flow of the FSK tone signal is the same as that of the sidetone. See Figure 21.

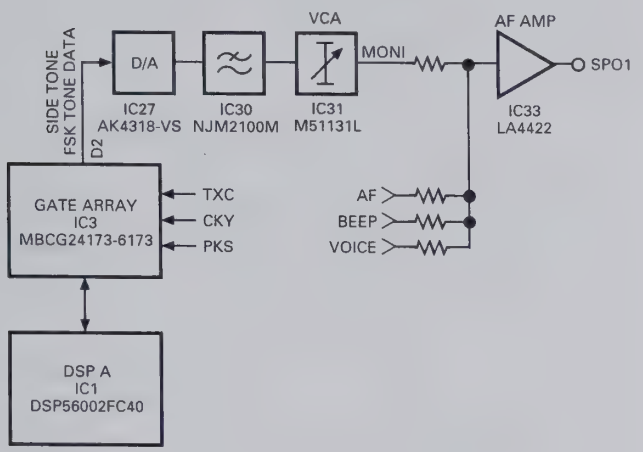

Fig. 21 Sidetone and FSK tone signal flow

■ Beep signal flow

When pin 6 (BEEP) of CN7 goes HIGH, DSP A sends beep data to the gate array in the same process as the demodulate signal. Like modulation data, the signal is sent from pin 60 of the gate array to the digital to analog converter (IC16 : AK4318-VS) in 1/fs intervals, and converted to an analog signal. The analog beep signal is passed through the primary low-pass filter IC19 : NJM4560M, and attenuated by VCA (IC29 : M51131L). The attenuation is determined by the value set on the menu. The flow of the signal after passing through the VCA is the same as for the demodulate signal.

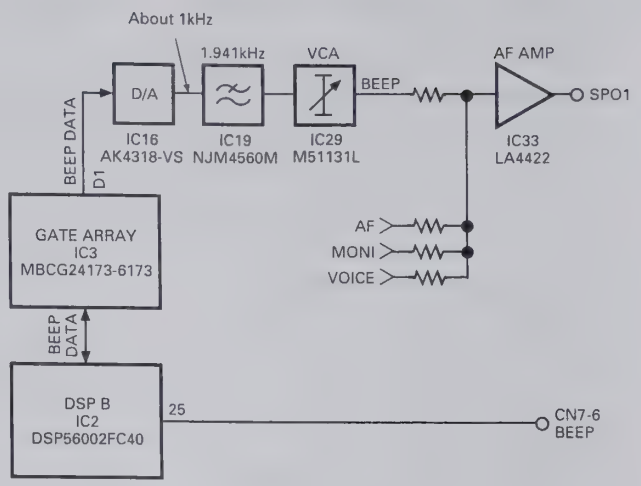

Fig. 22 Beep signal flow

■ DRU-3 recording and playback

The DRU-3 is controlled by the microprocessor in the control unit. During the DRU-3 recording, the MIC signal amplified by the differential amplifier (IC22 : AD822AR) is input to the DRU-3, and recorded. During DRU-3 playback, the playback signal is input to the analog-to-digital converter by switching the multiplexer (IC23 : MC74HC4052F). When the DSP receives a command "VOX ON and DRU playback" from the microcomputer, pin 38 of DSP B (IC2 : DSP56002FC40) goes HIGH and the SS line goes LOW. When the SS line goes LOW, the microprocessor sets the transceiver to transmit mode. This operation does not occur at the playback sound level of the DRU-3. Even if no sound is recorded, the transceiver enters the transmit mode when a DRU playback command arrives while VOX is ON. See Figure 20.

■ VS-2 audio signal flow

The audio signal output from the VS-2 is not processed by the DSP. The signal is amplified by the AF amplifier, and output to the speaker or headphone. The VS-2 is controlled by the microprocessor. See Figure 23.

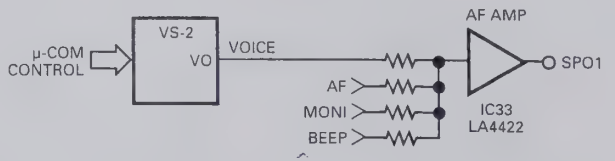

Fig. 23 VS-2 audio signal flow

CIRCUIT DESCRIPTION

■ Commands and data transferred to or from the microprocessor

To understand the DSP processing, the commands sent from the microcomputer to the DSP, and data sent from the DSP to the microcomputer are described below.

For details of error status, see the error list (Table 10).

1) Microprocessor → DSP

- Transmit mode
- Transmit filter
- CW rise (fall) time
- FSK shift width
- Squelch level
- Applicable filter follow speed
- SPAC interrelation time
- Check mode operation setting
- VOX delay time
- AGC release time
- TX AGC release time
- AGC correction
- TX equalizing
- FM modulation
- Processor compression level (LOW)
- Processor compression level (MID)
- Processor compression level (HIGH)
- RX AF AGC gain (AM/FM)
- RX AF AGC gain release time (AM/FM)
- TX AGC gain (packet input)
- Receive mode
- Receive filter
- CW pitch frequency
- FM subtone frequency
- Noise/interference elimination mode setting
- Auto notch follow speed
- Operation flag 1
- VOX gain
- RF gain (AGC)
- TX AGC gain
- AM modulation
- Carrier level
- Operation flag 2

2) DSP → Microprocessor

- S-meter data
- Compression level data
- Squelch status
- Microphone level data
- Error status
- Check mode status

Error No.	Error description
00	TX-RX unit is not connected.
01	Main DSP stack error
02	Main DSP trace error
03	Main DSP software interrupt
04	Main DSP SSI reception
05	Main DSP SSI exceptional reception
06	Main DSP SCI reception
07	Main DSP SCI exceptional reception
08	Main DSP SCI transmission
09	Main DSP SCI line idle detection
0A	Main DSP NMI
0B	Main DSP invalid command detection
0C	Command cannot be transferred from the main DSP to the sub DSP.
10	RAM check error 1
11	RAM check error 2
12	Gate array check error
21	Sub DSP stack error
22	Sub DSP trace error
23	Sub DSP software interrupt
24	Sub DSP SSI reception
25	Sub DSP SSI exceptional reception
26	Sub DSP SCI reception
27	Sub DSP SCI exceptional reception
28	Sub DSP SCI transmission
29	Sub DSP SCI line idle detection
2A	Sub DSP NMI
2B	Reserved
2C	Reserved
2D	Sub DSP invalid command detection
2E	Reserved
F0	Main DSP timeover error
F1	Sub DSP timeover error
FD	PLL unlock (TX-RX unit)
FE	PLL unlock (RF unit PLL section)
FF	Temperature protection error

Table 10 Error list

CIRCUIT DESCRIPTION

■ New function circuit

The TS-870S noise processing, auto notch, line enhancer, SPAC, and beat cancel functions are characteristics of the DSP digital signal processing. These functions and other features are described below.

1) Auto notch

The auto notch corresponds to the IF filter used in the previous models. It is an adaptive filter, and emphasizes weak signals by tracking interfering signals automatically in the AGC loop (the reception gain increases). The notch filter has very good damping and frequency characteristics in the receiving bandwidth.

2) Beat cancel

The "beat cancel" corresponds to the AF filter used in the previous models. It also is an adaptive filter, and finds and removes beat components from the received signal. Unlike the notch filter, this filter removes multiple beats, but it does not emphasize weak signals even if the beat is canceled.

3) Noise reduction

The TS-870S uses a line enhancer or SPAC to reduce noise. One of these two functions should be assigned to the N.R. key on the front panel.

The line enhancer is an adaptive filter which does not attenuate the target signal, but attenuates only noise. If the conditions are not very bad, the S/N ratio can be improved greatly.

Select SPAC to improve the S/N ratio effectively. SPAC stands for "Speech Processing System by use of Auto Correlation function." It takes the periodical signal (target reception signal) and suppresses noise using the Auto Correlation function. Since SPAC takes reception signals with a certain time width, the signals become discontinuous and cause noise.

Since the auto notch, beat cancel, and line enhancer are adaptive filters, their characteristics change according to the input signal. If the automatic tracking is set to OFF on the menu when the filter effect is good under good signal conditions, the effect does not change even if the conditions turn bad.

4) VOX

DSP processes the correlation between the received signal and signal from the microphone, and carries out the conventional anti-VOX processing. Therefore, TS-870S does not have anti-VOX.

5) SSB modulation/demodulation

TS-870S uses the PSN modulation/demodulation used for TS-950 and subsequent models. With the increase in the DSP operation precision, the side-band suppression has been improved in a very wide bandwidth from 25Hz to 6kHz (80dB or more for modulation and 90dB for demodulation). The PSN method does not eliminate all group-delay distortion because the Hilbert converter uses an IIR filter. The TS-870S uses a linear phase shifter with a Hilbert converter containing an FIR filter. As the FIR filter can keep group delay constant, it does not cause group-delay distortion. However, as the group-delay itself increases, if the linear phase shifter is set to ON via the menu, a signal is transmitted several ms after a voice enters the microphone.

■ Analog section and other circuits

The analog section and other circuits were described in the flow of transmission and reception signals. This section describes the circuits that were not explained in the flow of transmission and reception signals.

1) Reference voltage circuit

Since TS-870S does not have a negative power supply, a 2.5V reference voltage, which is half the power supply voltage, is supplied to the OP amplifier to process analog signals linearly. Fig. 24 shows this circuit. 2.5V are produced by dividing the power supply voltage by R129 and R132. This voltage is provided to the circuitry through buffer amplifier IC19 or IC20.

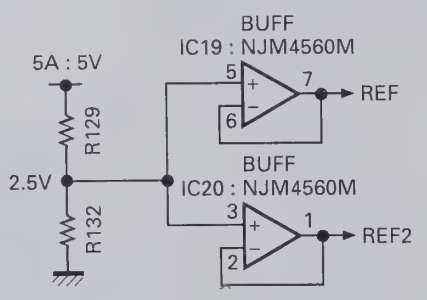

Fig. 24 Reference voltage circuit

CIRCUIT DESCRIPTION

2) Pop mute circuit

The mute circuit shown in Fig. 25 reduces the pop sound when the power is switched ON and OFF. If CN7 pin 16 AMUT is LOW, the mute circuit consisting of IC44 : TC7S04F and Q22 : DTC124EK mutes the AF amplifier (IC33 : LA4422) and suppresses the pop sound when the power is turned ON. A microprocessor controls AMUT and cancels muting at an appropriate time.

When the power is turned OFF, muting is also controlled by AMUT, but is done only if the power switch ON TS-870S is pressed. The circuit comprising Q25 : DTA143EK, Q26 : DTC124XK, and Q27 : DTC143EK suppresses the pop sound when the external power supply switch is turned OFF. When this switch is turned OFF, the voltage of the AF amplifier power supply 14A decreases. When the 14A voltage falls, Q25 becomes active (ON), and then Q26 becomes active (the collector goes LOW to mute the AF amplifier and suppress the pop sound. Q27 prevents muting when the voltage of the AF amplifier power supply 14A falls during transmission.

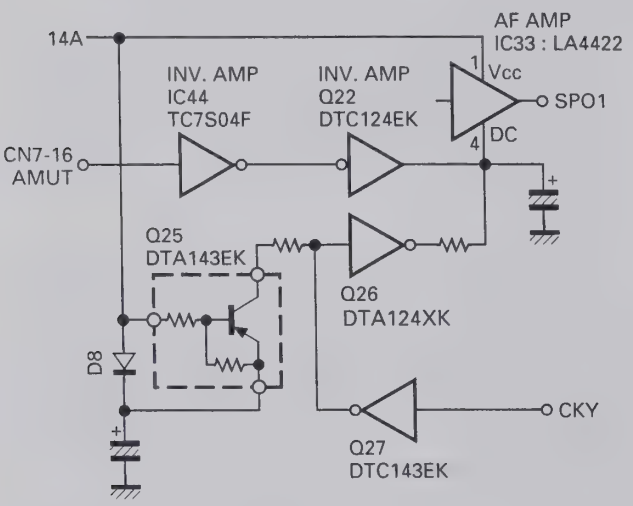

The TS-870S uses AF amplifier IC33: LA4422 pin 4 (DC) as the mute pin.

Fig. 25 Pop mute circuit

■ Transmit/receive frequency characteristics correction circuit

The transmission sound quality has a flat frequency characteristic due to DSP modulation. However, the low-frequency range is also flat to the cut-off frequency, so the model has less clarity compared to the conventional transceivers. A correction circuit is provided to suppress the low-frequency range. It consists of R141, R155, and C145 in the TX-RX unit, and it is –2dB at 300Hz for 1kHz.

To return to the flat frequency characteristic, remove C145 and replace R155 with a 1.8kΩ resistor. (See Figure 26.)

The receive frequency is also flat, as well as the hi-fi sound quality when the filter is widened. When the receive frequency is flat, the volume of the low-frequency range becomes insufficient, so a correction circuit that slightly emphasizes the low-frequency range is provided. It consists of R204, R205, R208, and C208 in the TX-RX unit, and it is +2dB at 1kHz for 3kHz.

To return to the flat frequency characteristic, remove R205. (See Figure 26.)

Transmit side

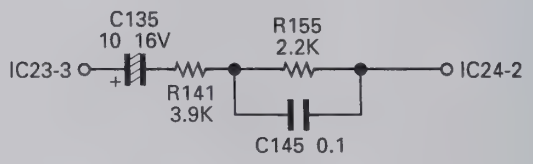

Receive side

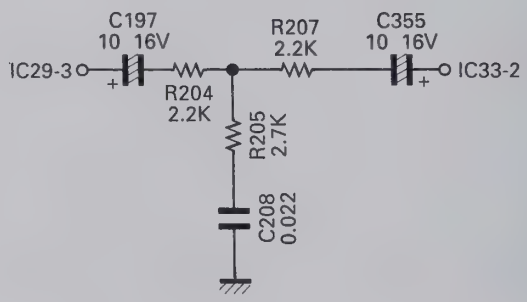

Fig. 26 Transmit/receive frequency characteristics correction circuit

DESCRIPTION OF COMPONENTS

RF UNIT (X44-3210-00) (A/9) : RF

Ref. No.	Use/Function	Operation/Condition
Q1	Switching	On when exit RX on.
Q2	Switching	On when TX.
Q3	Switching	Off when ATT1 or ATT2 on.
Q5	TX RF amplifier	Drive output (TX frequency)
Q6	Switching	DATT on
Q7	Switching	1/2 : 30kHz~490kHz 2/2 : 490kHz~1.62MHz
Q8	Switching	1/2 : 1.62MHz~2.49MHz 2/2 : 2.49MHz~3.99MHz
Q9	Switching	1/2 : 3.99MHz~6.99MHz 2/2 : 7.30MHz~10.49MHz
Q10	Switching	1/2 : 6.99MHz~7.30MHz 2/2 : 13.99MHz~14.49MHz
Q11	Switching	1/2 : 20.99MHz~21.49MHz 2/2 : 21.49MHz~30.00MHz
Q12	Switching	1/2 : 14.49MHz~20.99MHz 2/2 : 10.49MHz~13.99MHz
Q13	RF amplifier	21.49MHz~30.00MHz
Q14, 15	RF amplifier	30kHz~21.49MHz
Q16	Amplifier	LO1 : 73.08MHz~103.05MHz
Q17~20	Mixer	$f_{LO1} - f_{RF}$ = 73.05MHz
Q21	Ripple filter	14S
Q22	Amplifier	73.05MHz
Q23	Mixer	73.05MHz – 64.22MHz = 8.83MHz
Q24	Amplifier/AGC	73.05MHz
Q26, 27	Mixer	73.05MHz – 64.22MHz = 8.83MHz
Q28	Amplifier	8.83MHz
Q29~31	Amplifier/AGC	8.83MHz
Q32	AGC	NB (Noise blanker)
Q33	Amplifier/AGC	8.83MHz
Q35, 36	Mixer	73.05MHz → TX f
Q37, 38	Mixer	8.83MHz → 73.05MHz
Q39	Amplifier	TX IF
Q42	Switching	RF blanking
Q43, 44	DC amplifier	ALC
Q45, 46	Switching	On when AM mode.
Q47	DC amplifier	ALC
Q48	Switching	On when AM transmission mode.
Q49	Switching	
Q50	DC amplifier	ALC amplifier
Q51	Switching	Pulse generate when AM transmission mode.
Q52	DC amplifier	ALC amplifier
Q54	Switching	Off when NB.
Q55	Switching	Make relay for linear.
Q56	Switching	On when TX.
Q57, 59	Switching	TXB generate
Q58, 60	Switching	RXB generate
Q61	Switching	On when AIP off (0~21.49MHz).
Q62	Switching	On when AIP off (21.49~30MHz).
Q63	Switching	On when AIP off.
Q64	Switching	On when AIP on.
Q65	Switching	12V when RX.
Q66	Switching	On when RX.
Q70, 71	Switching	CKY
IC1	Serial/Parallel conversion	BPF selection
IC2	Serial/Parallel conversion	
IC6	OP amplifier	ALC meter
IC7	DAC	8 ch
IC8	Meter amplifier	VSF, VSR, ALC and Processor.

DESCRIPTION OF COMPONENTS

Ref. No.	Use/Function	Operation/Condition
IC9	Comparator	NB pulse
IC10	AVR	8V → 5V
D1~3	Relay surge absorption	
D4~7	Large input protection	
D8	RF switch	On when RX.
D10	RF switch	On when TX.
D11~33, 35	RF switch	BPF switch
D36, 37	RF switch	On when AIP on.
D38, 39	RF switch	ON when 21.49MHz or more RF amplifier selection.
D40, 41	RF switch	On when 21.50MHz or less RF amplifier selection.
D42	RF switch	
D43	RF switch	LO2 (64.22MHz) switch
D46	RF switch	Noise detection
D47	RF switch	TGC voltage control
D49	RF switch	Gain control
D50	Zener diode	–6.2V stability
D51	LED	Voltage generate
D52	Zener diode	12V (ALC voltage for linear)
D53	Switch	Pulse generate
D54	Reverse current prevention	
D55	Zener diode	3V (Voltage shift)
D56	Switch	ALC
D57	LED	CKY
D58	Relay surge absorption	
D59	Reverse current prevention	RBK
D60	RF switch	On when 29MHz.
D61	RF switch	On when AIP on.
D62	RF switch	On when RX.
D63, 64	RF switch	8.83MHz filter changeover (15kHz).
D65, 66	RF switch	8.83MHz filter changeover (3kHz).
D67	RF switch	8.83MHz filter changeover (6kHz).
D68	RF switch	On when TX.
D69	RF switch	8.83MHz filter changeover (6kHz).
D70	Zener diode	6.2V (Voltage shift)
D71	Zener diode	4.7V (Voltage stability)
D72	Switch	CKY

RF UNIT (X44-3210-00) (B/9) : PLL

Ref. No.	Use/Function	Operation/Condition
Q500	Buffer	D/A buffer
Q501	Amplifier	20MHz (f_{STD})
Q502	Mixer IC506 input buffer	5.46~4.46MHz
Q503	Buffer	D/A buffer
Q504, 505	Switching	Chopper
Q506	Buffer	Output for chopper
Q507	Amplifier	LO3 (8.375MHz)
Q508	Buffer	For LO3 output
Q510	Buffer	D/A buffer
Q511	Buffer	For LO4 output
Q512	Amplifier	REF 20MHz
Q513	Tripled circuit	f_{SDT} x 3 = 60MHz
Q514, 515	Buffer	Reference oscillator 20MHz
Q516	VCO A changeover	
Q517	VCO B changeover	

DESCRIPTION OF COMPONENTS

Ref. No.	Use/Function	Operation/Condition
Q518	VCO C changeover	
Q519	VCO D changeover	
Q520	VCO A	73.08~80.54MHz
Q521	VCO B	80.54~87.54MHz
Q522	VCO C	87.54~94.54MHz
Q523	VCO D	94.54~103.05MHz
Q524	Buffer	VCO A~VCO D output (73.08~103.05MHz)
Q525	Mixer IC508 input buffer	73.08~103.05MHz
Q526	Buffer	For LO1 output
Q527	Active LPF	Comparison 1MHz
Q528, 529	Active LPF	
Q530	Amplifier	PLL IC IC507 input (18~48MHz)
Q531	Amplifier	18~48MHz
Q532	Amplifier	LO2A output (64.22MHz)
Q533	Switching	PLL unlock signal output ("H" : Unlock)
Q534~536	Active LPF	Comparison 20kHz (5kHz in FM mode)
Q537	Switching	FM modulation input on/off
Q539	Buffer	For LO2A outrput
Q800	Reference oscillator	Reference frequency 20MHz oscillation.
IC500	DDS	1.46~0.46MHz for LO1
IC501	DDS	1.625MHz for LO3
IC502	DDS	For LO4
IC503	Divider	20MHz x (1/5) = 4MHz
IC505	Mixer	1.46~0.46MHz → 5.46~4.46MHz
IC506	Mixer	5.46~4.46MHz → 54.54~55.54MHz
IC507	PLL	2~5 : Frequency division ratio input 6 : 18~48MHz input 9 : Lock voltage output 11 : Unlock output (Unlock : "L") 15 : 20MHz input
IC508	Mixer	73.05~103.05 + 54.54~55.54 = 18~48MHz
IC509	PLL	2~5 : Frequency division ratio input 6 : 64.22MHz input 9 : Lock voltage output 11 : Unlock output (Unlock : "L") 15 : 20MHz input
IC510	AVR	13.8V → +9V
IC511	AVR	13.8V → +9V low drop-out
D500	Vari-cap diode	VCO A
D501	Switching	VCO A output
D502	Vari-cap diode	VCO B
D503	Switching	VCO B output
D504	Vari-cap diode	VCO C
D505	Switching	VCO C output
D506	Vari-cap diode	VCO D
D507	Switching	VCO D output
D508	Reverse current prevention	Unlock signal detection

FINAL UNIT (X45-351X-XX) (A/5) : FINAL 0-00 : K,P,M,M2,X 2-71 : E,E2,E3,E9

Ref. No.	Use/Function	Operation/Condition
Q501	Pre-drive amplifier	Wide-band amplification of HF band
Q502, 503	Drive amplifier	Push-pull wide-band amplification of HF band
Q504	Drive bias supply	Temperature compensation of drive
Q505, 506	Final amplifier	Push-pull wide-band amplification of HF band
Q507	Final bias supply	Temperature compensation of final
D501	Temperature compensation	Temperature sensing of pre-drive
D502	Temperature compensation	Temperature sensing of drive
D503	Temperature compensation	Temperature sensing of final
D504	Reverse power connection protection	

DESCRIPTION OF COMPONENTS

FINAL UNIT (X45-351X-XX) (B/5) : FILTER

Ref. No.	Use/Function	Operation/Condition
Q1~5	Relay driver	
Q6	Switch	Antenna tuner through tune
Q10~16	Relay driver	
IC1	Band data decoder	
D1	High-frequency rectification	Reflected wave rectification
D2	High-frequency rectification	Forward wave rectification
D3	Voltage stabilization	5.1V
D4	Relay surge absorption	1.6~2.0MHz LPF relay
D5	Relay surge absorption	2.0~4.0MHz LPF relay
D6	Relay surge absorption	4.0~7.5MHz LPF relay
D7	Relay surge absorption	7.5~10.5MHz LPF relay
D8	Relay surge absorption	10.5~14.5MHz LPF relay
D9	Relay surge absorption	14.5~21.5MHz LPF relay
D10	Relay surge absorption	21.5~30.0MHz LPF relay
D11	Switching	

FINAL UNIT (X45-351X-XX) (C/5) : CONNECTION

Ref. No.	Use/Function	Operation/Condition
Q401~403	DC/DC	–6V
Q404	Ripple filter	14S → 14V
Q405	Ripple filter, AVR	
Q460, 461	Mixer	RX
Q470, 471	MIxer	TX
Q472, 475	Amplifier	TX IF
IC402	5V AVR	8V → 5V (For PLL)
D401	Rectification	
D402	Current stabilization	9V
D450	Reverse current prevention	
D451~456	RF switch	BPF switch
D457	Reverse current prevention	

FINAL UNIT (X45-351X-XX) (D/5) : AVR

Ref. No.	Use/Function	Operation/Condition
Q601	Switch	14S supply when power switch on.
Q701	Switch	On when fan operation
Q702, 703	Switch	Fan motor drive
IC601	8V AVR	13.8V → 8V (Analog 8V : 8A)
IC602	8V AVR	13.8V → 8V (Digital 8V : 8D)
IC701	Comparator	Fan control
D601	Relay surge absorption	
D701	Reverse current prevention	
D702	Surge absorption	

FINAL UNIT (X45-351X-XX) (E/5) : RELAY

Ref. No.	Use/Function	Operation/Condition
D301	Lightning surge protection	ANT1
D302	Lightning surge protection	ANT2
D303	Relay surge absorption	Antenna changeover relay
D304	Relay surge absorption	TX/RX changeover relay

DESCRIPTION OF COMPONENTS

AT UNIT (X53-3340-02)

Ref. No.	Use/Function	Operation/Condition
Q1, 2	Amplifier	Waveform shaping
Q3	Switching	On when APRE is "H".
Q4, 5	Switching	Motor speed control pulse
IC1	DFF	Phase difference detection 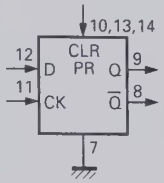 Function table INPUTS / OUTPUTS CLOCK / D / Q / $\overline{Q}$ ↑ / L / L / H L / X / Qo / $\overline{Qo}$
IC2	Analog switch	For control changeover motor 1 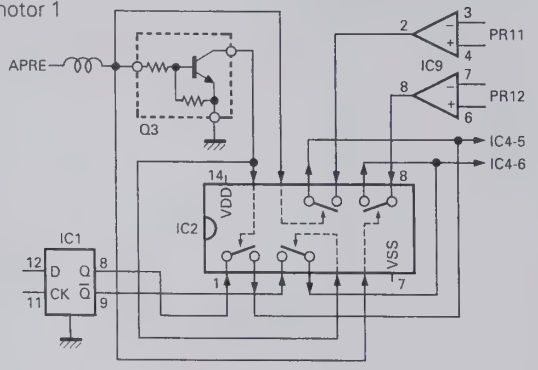
IC3	Analog switch	For control changeover motor 2 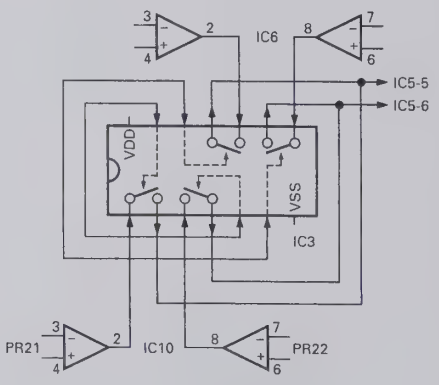
IC4	Motor drive	For motor 1 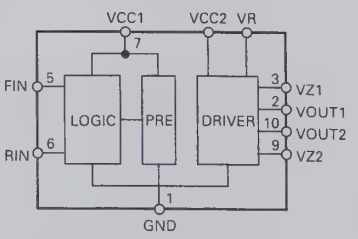
IC5	Motor drive	For motor 2
IC6	Comparator	Amplification difference detection
IC7	AVR	+5V
D1	Detector	Current component amplification detection
D2	Detector	Voltage component amplification detection
D3~8	Switching	Clipper
D10	Switching	Spike absorption
D101~103	Switching	Spike absorption
D105~108	Switching	Spike absorption
D109, 110	Switching	Band data

DESCRIPTION OF COMPONENTS

CONTROL UNIT (X53-356X-XX) (A/4) : CONTROL

0-11 : K,P 0-21 : M 0-22 : M2 0-71 : X 2-71 : E 2-72 : E2 2-73 : E3 2-74 : E9

Ref. No.	Use/Function	Operation/Condition
Q1, 2	Switching	Voltage drop changeover
Q3, 4	Switching	Multiplexer changeover
Q5	Switching	EEPROM write control changeover
Q6~11	Switching	AT control (PR11, PR12, PR21, PR22, APRE, SPED)
Q12, 13	Switching	AT-300 control and input (TS, TT)
Q14, 15	Switching	AT-300 control and output (TS, TT)
Q16	Switching	IC24 control (Reset)
Q17~19, 22	Switching	IC24 control (CH1, 2, 3, 4)
Q20, 24	Switching	IC24 control (DOT)
Q21, 23	Switching	IC24 control (DASH)
Q27	Switching	VBSY signal
Q28	Switching	KEY signal
Q29	Switching	Filter changeover (6kHz)
Q30	Switching	Filter changeover (3kHz)
Q31	Switching	Filter changeover (15kHz)
Q33	Switching	BLNK signal
IC1, 2	Regulator	5V output
IC3	Regulator	8V output
IC4	EEPROM	Adjustment data saving
IC5	Reset, Power supply changeover	System reset and Back-up power supply changeover
IC6	CPU	8 bit microcomputer (Main)
IC7, 10	Inverter	Reverse data
IC8	RAM	8K-byte
IC9, 13	Multiplexer	A/D data changeover
IC11	OR gate	RD/WR signal output
IC12	ROM	64K-byte
IC14	AND gate	Chip select combination for RAM and ROM
IC15	Bidirectional buffer	Data bus input/output changeover
IC16, 22, 23	Extended I/O	8 bit x 4, 4 bit x 1
IC17, 18	Decoder	Converts the address signal into a chip select signal for each IC.
IC19	Latch	Chip select signal latch
IC20, 21	Encoder gate array	Encoder pulse count
IC24	CPU	8 bit microcomputer (Electronic keyer)
IC25, 26	Schmitt trigger	Encoder chattering absorption
IC27	Level shift	RS-232 level shift
IC28	OP amplifier	Buffer
IC29	OR gate	CKY signal and BPC signal combination
D1~3	Protection diode	Power supply
D4	Voltage detector	Voltage drop detection (About 10V)
D5	Protection diode	Reverse current prevention
D6	Protection diode	KEYS line
D7	Protection diode	DASH line
D8	Protection diode	DOT line
D9	Protection diode	MD line
D10	Protection diode	MU line
D11	Protection diode	KEY line
D12	Protection diode	SS line

DESCRIPTION OF COMPONENTS

CONTROL UNIT (X53-356X-XX) (B/4) : SW

Ref. No.	Use/Function	Operation/Condition
Q501, 502	LED switch	
IC501~504	Serial/Parallel	Data conversion for tact switch and LED
D501, 502	LED	
D510~519	LED	

TX-RX UNIT (X57-4620-00)

Ref. No.	Use/Function	Operation/Condition
Q1	Switch	Change SS line to low when VOX active.
Q2	Amplifier	64.22MHz
Q3	Amplifier	REF 20MHz
Q4	Switch	On/Off when squelch open/close (For packet).
Q5, 7	Active LPF	
Q6	Active LPF	PLL loop filter
Q8	VCO	46.32MHz oscillation circuit
Q9, 10	VCO	Output buffer
Q12	Amplifier	LO4 466kHz
Q13, 15	Buffer	TX IF 455kHz
Q14	Amplifier	TX IF 455kHz
Q16	Buffer	Receive signal for DSP processing (11.3kHz)
Q17	Buffer	ACC2 audio output
Q22	Switch	Mute signal (Power on/off)
Q23	Buffer	RX IF 455kHz
Q25	Pulse generator	AF mute
Q26	Switch	Mute signal
Q27	Switch	Mute signal absorption (Mute inhibit when TX)
IC1	DSP A	Main DSP
IC2	DSP B	Sub DSP
IC3	Gate array	For interface
IC4	DSP ROM	Low (D0~D7) 32KB
IC5	DSP ROM	Mid (D8~D15) 32KB
IC6	DSP ROM	High (D16~D23) 32KB
IC7	DSP RAM	8K ward
IC9	PLD	Timing generator
IC15	PLL IC	46.32MHz clock generation
IC16	DAC	Rch : BEEP signal (About 1kHz) Lch : Transmission signal (11.3kHz)
IC17	Active filter	TX (fc = 49.1kHz) 3rd LPF
IC18	Mixer	RX : 455kHz → 11.3kHz TX : 11.3kHz → 455kHz
IC19	Voltage follower, Active LPF	Reference voltage buffer, BEEP LPF (fc = 1.9kHz)
IC20	Voltage follower	Reference voltage buffer
IC21	LPF, Buffer	RX IF 11.3kHz
IC22	Amplifier	Microphone amplifier, unbalanced/balanced modulation
IC23	Multiplexer	MIC, DATA, DRU-3 changeover
IC24	LPF, Buffer	TX microphone amplifier, unbalanced/balanced modulation
IC25	ADC	Rch : Reception signal Lch : Microphone input signal
IC26	DAC	VCA control
IC27	DAC	Rch : Monitor signal Lch : De-modulation signal
IC28	Active LPF	De-modulation signal (fc = 10.6kHz)
IC29	VCA (Electronic volume)	De-modulation signal, BEEP
IC30	Active LPF	Monitor signal (fc = 5.3kHz)
IC31	VCA (Electronic volume)	Packet AF, monitor
IC33	AF amplifier	Audio amplifier

DESCRIPTION OF COMPONENTS

Ref. No.	Use/Function	Operation/Condition
IC34	DAC	Rch : AGC signal Lch : FM modulation signal
IC35	I-V converter, Inverter	AGC and S-meter voltage
IC36	I-V converter, Active LPF	FM modulation signal (fc = 7.2kHz)
IC37	AVR	13.8V → Analog 5V
IC38	AVR	Digital 8V → Digital 5V
IC39	AVR	13.8V → 5V for PLL
IC40	AVR	13.8V → 8V for PLL
IC41, 42	Buffer	VCA control
IC43	Clipper amplifier	RX IF 455kHz
IC44	Inverter	Mute (Power on/off)
D1~4	Reverse current prevention	
D5	VCO bari-cap diode for DSP	64.32MHz oscillation
D7, 8	Reverse current prevention	

SEMICONDUCTOR DATA

PLL : MB86001PF (RF Unit IC507, 509, TX-RX Unit IC15)

■ Terminal connection diagram

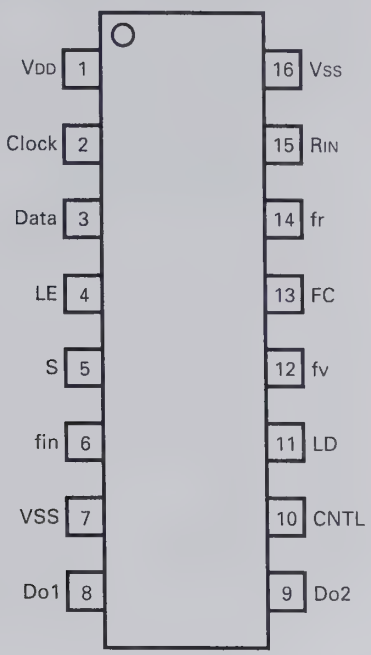

■ Terminal functions

Pin No.	Pin code	I/O	Function
1	VDD	–	Power supply pin.
2	Clock	I	Shift register clock input pin. Serial data is taken in at the rising edge of the clock signal. The input section contains a Schmitt trigger circuit.
3	Data	I	Serial data input pin for setting the divide ratio of each divider. The input section contains a Schmitt trigger circuit.
4	LE	I	Shift register load enable signal input pin. When LE is high, the divider ratio data is transferred to the latch specified by the control bit. This data is used as the divide ratio of each divider. The input section contains a Schmitt trigger circuit.
5	S	I	Switch pin for selecting the latch for setting the divide ratio of each divider. When the S pin is low, latch V1 is selected. When the S pin is high, latch V2 is selected. The divide ratio data is then sent to the divider.
6	fin	I	Divider input pin. The input section contains a bias circuit and an amplifier. Connect the voltage control oscillator (such as a VCO) by AC-coupling.
7	Vss	–	Ground pin.
8	Do1	O	Phase comparator output pin (charge pump). The Do1 output level can be reversed by FC. The reference divider output fr and divider output fv are related as follows. On when CNTL is low. fr > fv : High level (FC : Low), Low level (FC : High), fr = fv : High impedance, fr < fv : Low level (FC : Low), High level (FC : High)
9	Do2	O	Phase comparator output pin (charge pump). The relationships between the reference divider output fr and divider output fv are the same as for Do1. On when CNTL is high.
10	CNTL	I	Pin that controls charge pump outputs Do1 and Do2. The relationships between CNTL, Do1 and Do2 are as follows. When CNTL is low, Do1 : Output, Do2 : High impedance. When CNTL is high, Do1 : High impedance, Do2 : Output.
11	LD	O	Phase comparator output pin. When PLL is locked, LD is high. When PLL is unlocked, LD is low.
12	fv	O	Divider division output monitor pin. A signal is output from the pin in monitor mode. Normally, this pin has high impedance.
13	FC	I	Phase comparator input switch pin.
14	fr	O	Reference divider division output monitor pin. A signal is output from this pin in monitor mode. Normally, this pin has high impedance.
15	RIN	I	Reference divider input pin. The input section contains a bias circuit and an amplifier. Connect the reference oscillator (such as TCXO) by AC-coupling.
16	Vss	–	Ground pin.

SEMICONDUCTOR DATA

Bidirectional buffer : TC74VHC245F (COntrol Unit IC15)

■ **Terminal connection diagram**

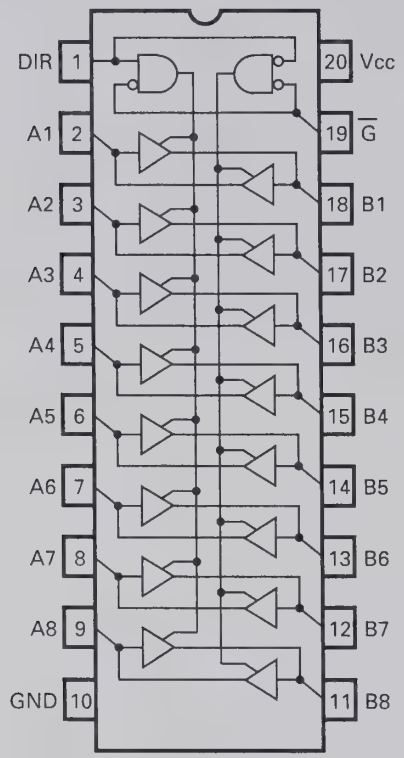

■ **Logic diagram**

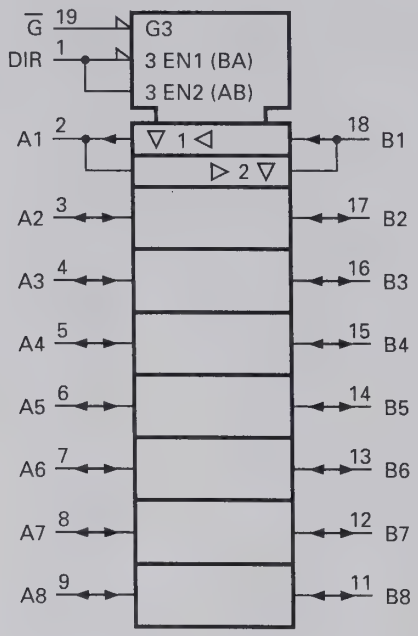

■ **Truth table**

Input		Function		Output
$\overline{G}$	DIR	A bus	B bus	state
L	L	Output	Input	A=B
L	H	Input	Output	B=A
H	X	High impedance		Z

X : Don't Care Z : High impedance

SEMICONDUCTOR DATA

DC/AC Converter : AK4318-VS (TX-RX Unit IC16, 27)

■ Terminal connection diagram

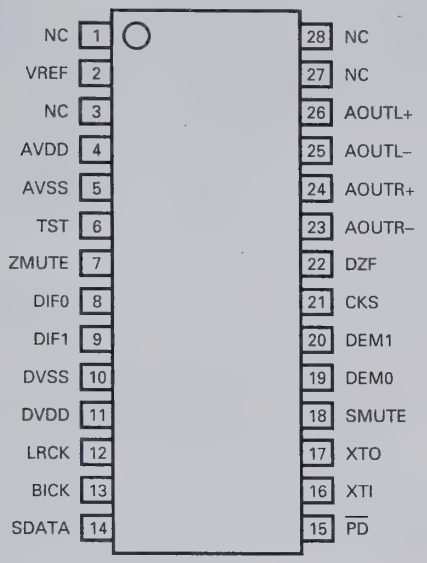

■ Block diagram

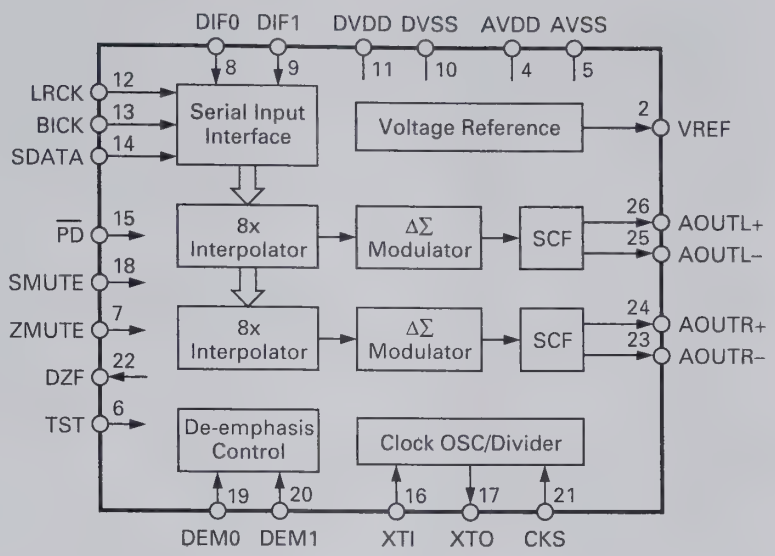

■ Terminal functions

Pin No.	Pin name	I/O	Function
1	NC	–	
2	VREF	O	Reference voltage output pin (AVDD) – 3.75V. The 10µF electrolytic capacitor and 0.1µF ceramic capacitor are connected between VREF and AVDD.
3	NC	–	
4	AVDD	–	Analog power supply pin (+5V).
5	AVSS	–	Analog ground pin.
6	TST	I	Test pin (pull down). Must be open or low.
7	ZMUTE	I	Zero mute pin (pull down). High : Detects zero and mutes output.
8, 9	DIF0, DIF1	I	Input format pin. Supports four modes.
10	DVSS	–	Digital ground pin.
11	DVDD	–	Digital power supply pin (+5V).
12	LRCK	I	L/R clock pin. Determines the input serial data channel.
13	BICK	I	Serial bit clock pin. The clock latches serial data.
14	SDATA	I	Serial data input pin. Number two's complement MSB first.
15	$\overline{PD}$	I	Reset pin. When this pin goes low, the filter and modulator are reset. Make this pin low to reset the filter and modulator when the power is turned on.
16	XTI	I	Clock input pin. Connect a crystal oscillator between XTI and XTO or input the external CMOS clock to XTI. The clock frequency can be selected with the CKS pin.
17	XTO	O	Crystal oscillator output pin. If the crystal oscillator is used, connect it between the XTO and XTI pins. If the external clock is used, open this pin.
18	SMUTE	I	Soft mute pin (pull down). High : Soft mute, Low : Cancel
19, 20	DEM0, DEM1	I	De-emphasis mode pin. Supports three frequencies.
21	CKS	I	Clock select pin. Low : CLK 256 fd, High : CLK 384 fs
22	DZF	O	Zero input detection pin. High when the data input to the SDATA pin for both channels becomes zero 8192 times consecutively.
23	AOUTR–	O	Right-channel analog negative output pin.
24	AOUTR+	O	Right-channel analog positive output pin.
25	AOUTL–	O	Left-channel analog negative output pin.
26	AOUTL+	O	Left-channel analog positive output pin.
27, 28	NC	–	

SEMICONDUCTOR DATA

AC/DC Converter : AK5340-VS (TX-RX Unit IC25)

■ Terminal connection diagram

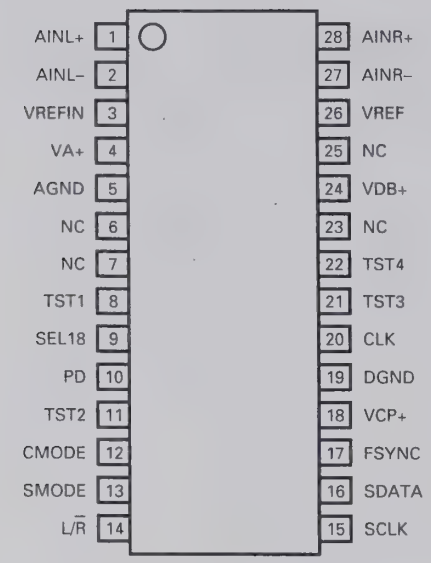

■ Block diagram

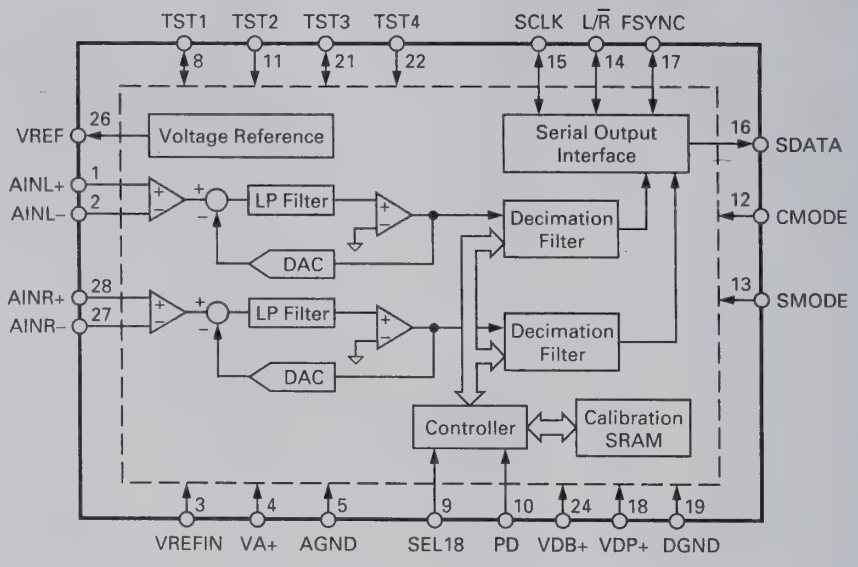

■ Terminal functions

Pin No.	Pin name	I/O	Function
1	AINL+	I	Left-channel analog non-inverted input pin.
2	AINL–	I	Left-channel analog inverted input pin.
3	VREFIN	I	Reference voltage input pin. Normally connect to the VREF pin. The input range is 1.6 times the difference between VA+ and the voltage input to this pin.
4	VA+	–	Analog section analog power supply pin (+5V).
5	AGND	–	Analog section analog ground pin.
6, 7	NC	–	
8	TST1	–	Test pin. Open or connect to DGND.
9	SEL18	I	Output data length select pin (with pull down resistor). Low : 16 bits, High : 18 bits
10	PD	I	Power down pin. High : Power down mode. Offset calibration starts at a falling edge. When the power is turned on or the clock frequency is changed, calibration must be carried out.
11	TST2	–	Test pin. Open or connect to DGND.
12	CMODE	I	Master clock select pin. Low : CLK 256 fs (12.288MHz @fs : 48kHz), High : CLK 384 fs (18.432MHz @fs : 48kHz)
13	SMODE	I	Interface clock select pin. Set the input/output of each of the L/R̄, SCLK, and FSYNC clock pins. Low : Save mode (all input pins), High : Master mode (all output pins)
14	L/R̄	I/O	Input channel select pin. Slave mode : The fs clock is input. Lch MSB data is output at a rising edge and Rch MSB data is output at a falling edge of the clock signal. Master mode : The fs clock is output. SDATA is output one clock after the L/R̄ edge. High when the power is down (PD : High).
15	SCLK	I/O	Serial data clock pin. One bit of data is output at a falling edge of the clock. Slave mode : Normally a 32 to 64 fs clock is input. Master mode : A 64 fs clock is output. Low when the power is down (PD : High).
16	SDATA	O	Serial data output pin. Data is number two's complement and the MSB is output first. Goes low after 16/18 bits are output. Low when the power is down (PD : High).
17	FSYNC	I/O	Frame synchronization clock pin. Slave mode : SDATA output is enabled when the pin is high. Master mode : The 2 fs clock is output. High when 16-bit data is output. The two low-order bits are low when 18-bit output is selected. Low when the power is down (PD : High).
18	VDP+	–	Digital section power supply pin (+5V).
19	DGND	–	Digital section ground pin.
20	CLK	I	Master clock input pin. When CMODE is high, CLK : 384 fs. When CMODE is low, CLK : 256 fs.
21, 22	TST3, TST4	–	Test pin. Open or connect to DGND.

SEMICONDUCTOR DATA

Pin No.	Pin name	I/O	Function
23	NC	–	
24	VDB+	–	Digital section power supply pin (+5V). (Silicon PCB potential)
25	NC	–	
26	VREF	O	Reference voltage output pin (VA+) – 2.6V. Output based on VA+. Normally connect this output to the VREFIN pin.
27	AINR–	I	Right-channel analog inverted output pin.
28	AINR+	I	Right-channel analog non-inverted output pin.

DC/AC Converter : PCM69AU (TX-RX Unit IC34)

■ Terminal connection diagram

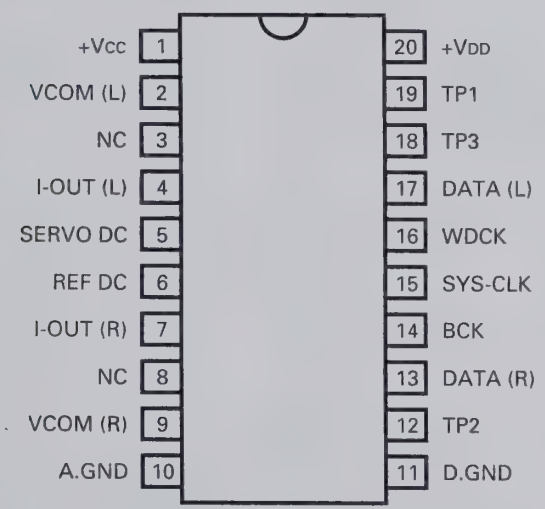

■ Terminal functions

Pin No.	Pin name	Function
1	+VCC	Analog Positive power supply
2	VCOM (L)	Lch V common
3	NC	
4	I-OUT (L)	Lch current output
5	SERVO DC	Servo filter
6	REF DC	Reference filter
7	I-OUT (R)	Rch current output
8	NC	
9	VCOM (R)	Rch V common
10	A. GND	Analog common
11	D. GND	digital common
12	TP2	Test pin 2
13	DATA (R)	Rch data input
14	BCK	Bit clock input
15	SYS-CLK	System clock input
16	WDCK	Word clock input
17	DATA (L)	Lch data input
18	TP3	Test pin 3
19	TP1	Test pin 1
20	+VDD	Digital positive power supply

PARTS LIST

CAPACITORS

CC 45 TH 1H 220 J
1 2 3 4 5 6

1 = Type ... ceramic, electrolytic, etc.
2 = Shape ... round, square, ect.
3 = Temp. coefficient
4 = Voltage rating
5 = Value
6 = Tolerance

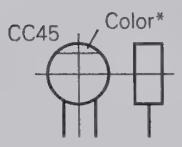

• Capacitor value

010 = 1pF
100 = 10pF
101 = 100pF
102 = 1000pF = 0.001µF
103 = 0.01µF

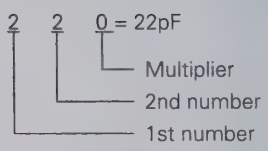

• Temperature coefficient

1st Word	C	L	P	R	S	T	U
Color*	Black	Red	Orange	Yellow	Green	Blue	Violet
ppm/°C	0	–80	–150	–220	–330	–470	–750

2nd Word	G	H	J	K	L
ppm/°C	±30	±60	±120	±250	±500

Example : CC45TH = –470 ± 60ppm/°C

• Tolerance

Code	C	D	G	J	K	M	X	Z	P	No code
(%)	±0.25	±0.5	±2	±5	±10	±20	+40	+80	+100	More than 10µF – 10 ~ +50
							–20	–20	–0	Less than 4.7µF –10 ~ +75

Less than 10pF

Code	B	C	D	F	G
(pF)	±0.1	±0.25	±0.5	±1	±2

• Voltage rating

2nd word / 1st word	A	B	C	D	E	F	G	H	J	K	V
0	1.0	1.25	1.6	2.0	2.5	3.15	4.0	5.0	6.3	8.0	–
1	10	12.5	16	20	25	31.5	40	50	63	80	35
2	100	125	160	200	250	315	400	500	630	800	–
3	1000	1250	1600	2000	2500	3150	4000	5000	6300	8000	–

• Chip capacitors (Refer to the table above except dimension)

(EX) CC 73 F SL 1H 000 J
1 2 3 4 5 6 7
(Chip) (CH, RH, UJ, SL)

(EX) CK 73 F F 1H 000 Z
1 2 3 4 5 6 7
(Chip) (B, F)

RESISTORS

• Chip resistor (Carbon)

(EX) RD 73 E B 2B 000 J
1 2 3 4 5 6 7
(Chip) (B,F)

• Carbon resistor (Normal type)

(EX) RD 14 B B 2C 000 J
1 2 3 4 5 6 7

1 = Type ... ceramic, electrolytic, etc.
2 = Shape ... round, square, ect.
3 = Dimension
4 = Temp. coefficient
5 = Voltage rating
6 = Value
7 = Tolerance

Dimension

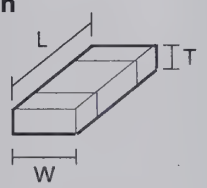

• Dimension (Chip capacitor)

Dimension code	L	W	T
Empty	5.6 ± 0.5	5.0 ± 0.5	Less than 2.0
E	3.2 ± 0.2	1.6 ± 0.2	Less than 1.25
F	2.0 ± 0.3	1.25 ± 0.2	Less than 1.25

• Dimension (Chip resistor)

Dimension code	L	W	T	Wattage
E	3.2 ± 0.2	1.6 ± 0.2	0.57	2B
F	2.0 ± 0.3	1.25 ± 0.2	0.45	2A

Rating wattage

Code	Wattage	Code	Wattage	Code	Wattage
2A	1/10W	2E	1/4W	3A	1W
2B	1/8W	2H	1/2W	3D	2W
2C	1/6W				

PARTS LIST

*New Parts. ⚠ indicates safety critical components.
Parts without **Parts No.** are not supplied.
Les articles non mentionnes dans le **Parts No.** ne sont pas fournis.
Teile ohne **Parts No.** werden nicht geliefert.

L : Scandinavia **K**: USA **P** : Canada
Y: PX (Far East, Hawaii) **T**: England **E** : Europe
Y: AAFES (Europe) **X**: Australia **M**: Other Areas

TS-870S

Ref. No.	Address	New parts	Parts No.	Description	Destination
TS-870S					
1	1B	*	A01-2097-01	METALLIC CABINET (UPPER)	
2	3B	*	A01-2098-01	METALLIC CABINET (LOWER)	
33	3A,2D	*	A62-0382-02	PANEL ASSY	
3	2C	*	A62-0384-02	PANEL	
4	2D	*	B10-1227-03	FRONT GLASS	
5	2D	*	B11-1123-04	REFLECTOR	
6	1E	*	B38-0736-05	DISPLAY ASSY	
7	2B		B42-3343-04	S/NO LABBL	
8	3N		B42-5526-04	STICKER	K
9	2C		B43-1045-04	BADGE (KENWOOD)	
10	2C	*	B43-1101-04	BADGE (DSP)	
11	3N		B44-2163-04	UPC CORD LABEL	
12	1O		B46-0310-03	WARRNTY CARD	EE2E3E9
12	1O		B46-0410-40	WARRNTY CARD	K
12	1O		B46-0422-00	WARRNTY CARD	P
13	1O	*	B62-0542-00	INSTRUCTION MANUAL (ENGLISH)	
14	1O	*	B62-0543-00	INSTRUCTION MANUAL (SPANISH)	MM2E2E3
15	1O	*	B62-0544-00	INSTRUCTION MANUAL (NETHERLAND)	MM2E2E3
16	1O	*	B62-0545-00	INSTRUCTION MANUAL (FRENCH)	PMM2
16	1O	*	B62-0545-00	INSTRUCTION MANUAL (FRENCH)	E2E3E9
17	1O	*	B62-0546-00	INSTRUCTION MANUAL (GERMAN)	E
18	1O	*	B62-0547-00	INSTRUCTION MANUAL (ITALIAN)	E
19	2B	*	B72-0911-04	MODEL NAME PLATE	KMM2XP
19	2B	*	B72-0912-04	MODEL NAME PLATE	EE2E3E9
20	1H		E04-0167-05	RF COAXIAL CABLE RECEPTACLE (M)	
21	1N		E07-0751-05	DIN PLUG (7P) ACSY	
22	1N		E07-1351-05	DIN PLUG (13P) ACSY	
23	1H		E23-0992-04	EARTH LUG (ANT)	
24	1N	*	E30-3157-15	DC CORD ACSY	
W51	2K,3K		E31-3433-05	LEAD WIRE WITH MINIPIN PLUG	
W52	3I,4K		E37-0062-05	LEAD WIRE WITH MINIPIN PLUG	
W53	2I,4K	*	E37-0518-05	LEAD WIRE WITH MINIPIN PLUG	
W54	1I,2I	*	E37-0519-05	LEAD WIRE WITH MINIPIN PLUG	
W56	1J,2K	*	E37-0521-05	LEAD WIRE WITH MINIPIN PLUG	
W57	1I,4K	*	E37-0522-05	LEAD WIRE WITH MINIPIN PLUG	
W58	1I	*	E37-0523-05	FLAT CABLE	
W59	2I,1J	*	E37-0524-05	FLAT CABLE	
W60	2A	*	E37-0526-05	FLAT CABLE	
W61	2A	*	E37-0527-05	FLAT CABLE	
W62	3I	*	E37-0528-05	FLAT CABLE	
W63-1	4J	*	E37-0529-05	FLAT CABLE	
W63-2	3I,4I	*	E37-0529-05	FLAT CABLE	
W64	4J	*	E37-0530-05	FLAT CABLE	
W65	3I	*	E37-0531-05	FLAT CABLE	
W66	3I,4I	*	E37-0532-05	FLAT CABLE	
W67	2A	*	E37-0533-05	FLAT CABLE	
W68	2A	*	E37-0534-05	FLAT CABLE	
W69	2I,4I	*	E37-0535-05	LEAD WIRE WITH MINIPIN PLUG	
W70	2A	*	E37-0537-05	LEAD WIRE WITH CONNECTOR	
W71	1I,1J	*	E37-0538-05	LEAD WIRE WITH CONNECTOR	
W72	1I,4K	*	E37-0540-05	LEAD WIRE WITH CONNECTOR	
W73	1I,1J	*	E37-0541-15	LEAD WIRE WITH CONNECTOR	
W74	1K	*	E37-0542-05	LEAD WIRE WITH CONNECTOR	

TS-870S

Ref. No.	Address	New parts	Parts No.	Description	Destination
W75	2J	*	E37-0543-05	LEAD WIRE WITH CONNECTOR	
W76	2A	*	E37-0547-15	LEAD WIRE WITH CONNECTOR (SP)	
W77	2J	*	E37-0548-05	LEAD WIRE WITH CONNECTOR	
W78	2I,4I	*	E37-0549-05	LEAD WIRE WITH CONNECTOR	
W79	2A	*	E37-0550-15	LEAD WIRE WITH CONNECTOR	
W80	2I,4J	*	E37-0551-05	LEAD WIRE WITH CONNECTOR	
W81	1I,4I	*	E37-0552-05	LEAD WIRE WITH CONNECTOR	
W82	2K,3K	*	E37-0569-05	LEAD WIRE WITH MINIPIN PLUG	
W83	–	*	E37-0570-05	LEAD WIRE WITH CONNECTOR (VS-2)	
26	1N		F05-2531-05	FUSE (25A/32V) ACSY	
27	1N		F06-4029-05	FUSE (4A/250V) ACSY	
28	2G	*	F09-0449-05	FAN MOTOR	
29	3G		F10-1206-04	SHIELDING COVER (EARTH SPRING)	
30	2B,1G		F10-1468-13	SHIELDING COVER (FINAL)	
31	1G		G02-0574-04	FLAT SPRING (AVR)	
32	2G	*	G02-0767-04	FLAT SPRING (THERMMISTOR)	
34	1A		G10-0697-04	FIBROUS SHEET (SP)	
35	1D		G10-0702-04	FIBROUS SHEET (SUB 2)	
36	1A		G10-0703-04	FIBROUS SHEET (CASE)	
39	1B		G13-0934-04	CUSHION (UPPER CASE)	
40	2G		G13-1310-04	CUSHION (FAN)	
41	4F	*	G13-1327-04	CUSHION (DRU-3)	
42	2D	*	G13-1480-04	CUSHION (KNOB)	
43	2D	*	G13-1481-04	CUSHION (KNOB)	
44	2D	*	G13-1482-04	CUSHION (KNOB)	
45	2D	*	G13-1483-04	CUSHION (KNOB)	
46	1A	*	G13-1498-04	CUSHION (SP)	
47	3B	*	G13-1511-04	CUSHION (LOWER CASE)	
50	2N	*	H10-2791-01	POLYSTYRENE FOAMED FIXTURE (F)	
51	2O	*	H10-2792-11	POLYSTYRENE FOAMED FIXTURE (R)	
52	1N	*	H13-0963-04	CARTON BOARD	
53	2O		H20-1437-03	PROTECTION COVER	
54	1N		H25-0029-04	BAG (FUSE)	
55	1N		H25-0079-04	BAG (MIC)	
56	1N		H25-0708-04	BAG (DC CORD)	
57	2O	*	H52-0730-02	ITEM CARTON CASE	
58	3O	*	H62-0641-03	OUTER PACKING CASE	
59	3B		J02-0049-14	FOOT (REAR)	
60	1A,3A		J02-0441-05	FOOT (SIDE)	
61	3A	*	J02-0474-05	FOOT (FRONT)	
62	2G		J21-4326-03	HARDWARE FIXTURE (FAN)	
63	1D	*	J21-4496-05	HARDWARE FIXTURE (PHONE JACK)	
64	2D		J31-0141-04	COLLAR (MIC)	
65	2H	*	J32-0923-04	HEXAGON BOSS	
–			J61-0307-05	BAND	
70	1B		K01-0416-05	HANDLE ASSY	
71	2C	*	K21-1102-04	KNOB (MAIN : WITH SCREW)	
72	2C	*	K29-4966-04	KNOB RING (MAIN)	
73	2D	*	K29-4967-03	KNOB (FILTER)	
74	2C	*	K29-4968-03	KNOB (M.CH,RIT : WITH SPRING)	
75	2C	*	K29-4969-03	KNOB (INSIDE)	
76	2C	*	K29-4970-03	KNOB (OUTSIDE)	
77	1C	*	K29-4978-03	KNOB (POWER)	
78	1D	*	K29-4979-03	KNOB (UP/DOWN)	

PARTS LSIT

TS-870S
RF UNIT (X44-3210-00)

Ref. No.	Address	New parts	Parts No.	Description	Destination
79	1C	*	K29-4980-03	KNOB (ANT, etc.)	
80	1D	*	K29-4981-03	KNOB (LED)	
81	1C,1D	*	K29-4982-03	KNOB (AT TUNE, etc.)	
82	1D	*	K29-4983-03	KNOB (LED)	
83	1C	*	K29-4984-03	KNOB (QUICK MEMO)	
84	1C	*	K29-4985-03	KNOB (LSB/USB)	
85	1C	*	K29-4986-03	KNOB (CW/-R)	
86	1C	*	K29-4987-03	KNOB (FSK/-R)	
87	1C	*	K29-4988-03	KNOB (FM/AM)	
88	1D	*	K29-4989-03	KNOB (AUTO NOTCH)	
89	1D	*	K29-4990-03	KNOB (BEAT CANCEL)	
90	1D	*	K29-4991-03	KNOB (N.R)	
91	1D	*	K29-4992-03	KNOB (TX EQ.)	
A	1H		N09-0372-04	SCREW (DC)	
B	1H		N09-0682-04	SCREW (GND)	
C	3F		N09-2051-05	SCREW	X
D	1H		N11-0040-46	FLANGE NUT (GND)	
E	1H		N14-0509-05	NUT (GND)	
F	1H		N15-1040-46	FLAT WASHER (GND)	
G	1D,1E		N32-2606-46	FLAT HEAD SCREW	
H	2A,3A		N32-3006-46	FLAT HEAD SCREW (SUB PANEL)	
I	1B,3B		N33-3006-41	OVAL HEAD SCREW (CASE)	
J	2A,2F		N87-2606-46	BRAZIER HEAD SCREW (UNIT,RL)	
K	1A,1H		N87-3006-46	BRAZIER HEAD SCREW (AT,FAN)	
L	2G,2H		N87-3008-46	BRAZIER HEAD SCREW	
M	2B,1G		N88-2608-46	FLAT HEAD SCREW (FINAL)	
N	2D		N90-3008-46	TP HEAD MACHIN SCREW (PANEL)	
P	3A,3B		N91-3010-46	TP HEAD TAPPING SCREW (FOOT)	
SP	1A		T07-0252-15	LOUDSPEAKER (8 ohm 1W)	
MIC	1N		T91-0352-15	MICROPHONE ACSY	
93	1E		W02-1836-05	ENCODER	
BATT	2A	*	W09-0873-05	LITHIUM CELL (3V 220MAh)	

RF UNIT (X44-3210-00)

C1			CK73FB1H103K	CHIP C	0.010UF	K
C2			CC73FCH1H121J	CHIP C	120PF	J
C3			CK73FF1C105Z	CHIP C	1.0UF	Z
C4,5			CK73FB1H103K	CHIP C	0.010UF	K
C6			CK73FB1E103K	CHIP C	0.010UF	K
C7			CK73FB1H103K	CHIP C	0.010UF	K
C8			CK73FB1H102K	CHIP C	1000PF	K
C10			CK73FB1H103K	CHIP C	0.010UF	K
C14			CK73FB1E103K	CHIP C	0.010UF	K
C15			CK73FF1C105Z	CHIP C	1.0UF	Z
C16			CK73FF1E104Z	CHIP C	0.10UF	Z
C17			CK73FF1C105Z	CHIP C	1.0UF	Z
C18			CK73FB1E103K	CHIP C	0.010UF	K
C19			CK73FB1H182K	CHIP C	1800PF	K
C21			CK73FB1H682K	CHIP C	6800PF	K
C22			CK73FB1H182K	CHIP C	1800PF	K
C23			CK73FF1E104Z	CHIP C	0.10UF	Z
C27			CK73FF1E104Z	CHIP C	0.10UF	Z
C28			CE04EW1C100M	ELECTRO	10UF	16WV
C29-31			CK73FF1E104Z	CHIP C	0.10UF	Z
C32			CE04EW1C100M	ELECTRO	10UF	16WV
C33			CK73FF1C105Z	CHIP C	1.0UF	Z

Ref. No.	Address	New parts	Parts No.	Description			Destination
C34			CK73FF1E104Z	CHIP C	0.10UF	Z	
C35			CC73FCH1H050C	CHIP C	5.0PF	C	
C36			CK73FB1H103K	CHIP C	0.010UF	K	
C39,40			CK73FB1E103K	CHIP C	0.010UF	K	
C47			CK73FB1H103K	CHIP C	0.010UF	K	
C48			CK73FB1H223K	CHIP C	0.022UF	K	
C49			CK73FB1H103K	CHIP C	0.010UF	K	
C50			CK73FF1E104Z	CHIP C	0.10UF	Z	
C51			CK73FF1C105Z	CHIP C	1.0UF	Z	
C52			CK73FB1H222K	CHIP C	2200PF	K	
C53			CK73FB1H682K	CHIP C	6800PF	K	
C54			CK73FB1H222K	CHIP C	2200PF	K	
C55			CK73FF1E104Z	CHIP C	0.10UF	Z	
C56			CK73FF1C105Z	CHIP C	1.0UF	Z	
C57			CK73FB1H472K	CHIP C	4700PF	K	
C58			CK73FF1E104Z	CHIP C	0.10UF	Z	
C59			CK73FF1C105Z	CHIP C	1.0UF	Z	
C60			CC73FSL1H821J	CHIP C	820PF	J	
C61			CK73FF1C105Z	CHIP C	1.0UF	Z	
C62			CK73FB1H472K	CHIP C	4700PF	K	
C63			CK73FF1E104Z	CHIP C	0.10UF	Z	
C64			CK73FB1H222K	CHIP C	2200PF	K	
C65			CK73FF1E104Z	CHIP C	0.10UF	Z	
C66			CK73FF1C105Z	CHIP C	1.0UF	Z	
C67			CK73FB1H561K	CHIP C	560PF	K	
C68			CK73FF1C105Z	CHIP C	1.0UF	Z	
C69			CK73FB1H222K	CHIP C	2200PF	K	
C70			CK73FF1E104Z	CHIP C	0.10UF	Z	
C71			CK73FB1H102K	CHIP C	1000PF	K	
C72			CK73FF1E104Z	CHIP C	0.10UF	Z	
C73			CK73FF1C105Z	CHIP C	1.0UF	Z	
C74			CC73FSL1H271J	CHIP C	270PF	J	
C75			CK73FF1C105Z	CHIP C	1.0UF	Z	
C76			CK73FB1H102K	CHIP C	1000PF	K	
C77,78			CK73FF1E104Z	CHIP C	0.10UF	Z	
C80			CK73FF1C105Z	CHIP C	1.0UF	Z	
C81			CC73FCH1H050C	CHIP C	5.0PF	C	
C83			CC73FCH1H050C	CHIP C	5.0PF	C	
C85			CC73FCH1H050C	CHIP C	5.0PF	C	
C87			CK73FF1C105Z	CHIP C	1.0UF	Z	
C88			CK73FF1E104Z	CHIP C	0.10UF	Z	
C89			CK73FB1H102K	CHIP C	1000PF	K	
C90			CK73FF1E104Z	CHIP C	0.10UF	Z	
C91			CK73FF1C105Z	CHIP C	1.0UF	Z	
C92			CC73FCH1H121J	CHIP C	120PF	J	
C93			CK73FF1C105Z	CHIP C	1.0UF	Z	
C94			CK73FB1H102K	CHIP C	1000PF	K	
C95			CK73FF1E104Z	CHIP C	0.10UF	Z	
C96			CK73FB1H102K	CHIP C	1000PF	K	
C97			CK73FF1E104Z	CHIP C	0.10UF	Z	
C98			CK73FF1C105Z	CHIP C	1.0UF	Z	
C99			CC73FCH1H820J	CHIP C	82PF	J	
C100			CK73FF1C105Z	CHIP C	1.0UF	Z	
C101			CK73FB1H102K	CHIP C	1000PF	K	
C102,103			CK73FF1E104Z	CHIP C	0.10UF	Z	
C105			CK73FF1C105Z	CHIP C	1.0UF	Z	
C106			CC73FCH1H040C	CHIP C	4.0PF	C	
C108			CC73FCH1H040C	CHIP C	4.0PF	C	
C110			CK73FF1C105Z	CHIP C	1.0UF	Z	

PARTS LIST

RF UNIT (X44-3210-00)

Ref. No.	Address	New parts	Parts No.	Description			Destination
C111			CK73FF1E104Z	CHIP C	0.10UF	Z	
C112			CC73FSL1H391J	CHIP C	390PF	J	
C113			CK73FF1E104Z	CHIP C	0.10UF	Z	
C114			CK73FF1C105Z	CHIP C	1.0UF	Z	
C115			CC73FCH1H680J	CHIP C	68PF	J	
C116			CK73FF1C105Z	CHIP C	1.0UF	Z	
C117			CC73FSL1H151J	CHIP C	150PF	J	
C118,119			CK73FF1E104Z	CHIP C	0.10UF	Z	
C121			CK73FF1C105Z	CHIP C	1.0UF	Z	
C122			CC73FCH1H050C	CHIP C	5.0PF	C	
C124			CC73FCH1H050C	CHIP C	5.0PF	C	
C126			CK73FF1C105Z	CHIP C	1.0UF	Z	
C127			CK73FF1E104Z	CHIP C	0.10UF	Z	
C128			CC73FCH1H221J	CHIP C	220PF	J	
C129			CK73FF1E104Z	CHIP C	0.10UF	Z	
C130			CK73FF1C105Z	CHIP C	1.0UF	Z	
C131			CC73FCH1H330J	CHIP C	33PF	J	
C132			CK73FF1C105Z	CHIP C	1.0UF	Z	
C133			CK73FF1E104Z	CHIP C	0.10UF	Z	
C134			CK73FB1H103K	CHIP C	0.010UF	K	
C135			CC73FCH1H121J	CHIP C	120PF	J	
C136			CK73FF1E104Z	CHIP C	0.10UF	Z	
C137			CC73FSL1H221J	CHIP C	220PF	J	
C138			CK73FB1E103K	CHIP C	0.010UF	K	
C139			CK73FF1E104Z	CHIP C	0.10UF	Z	
C140,141			CK73FB1E103K	CHIP C	0.010UF	K	
C142			CK73FF1E104Z	CHIP C	0.10UF	Z	
C143			CC73FCH1H390J	CHIP C	39PF	J	
C144,145			CK73FB1E103K	CHIP C	0.010UF	K	
C146,147			CK73FF1E104Z	CHIP C	0.10UF	Z	
C148			CK73FB1E103K	CHIP C	0.010UF	K	
C149			CK73FF1E104Z	CHIP C	0.10UF	Z	
C150,151			CK73FF1C105Z	CHIP C	1.0UF	Z	
C152,153			CK73FF1E104Z	CHIP C	0.10UF	Z	
C154			CC73FCH1H101J	CHIP C	100PF	J	
C155			CC73FCH1H150J	CHIP C	15PF	J	
C156			CK73FB1E103K	CHIP C	0.010UF	K	
C157			CC73FSL1H221J	CHIP C	220PF	J	
C158			CK73FB1H471K	CHIP C	470PF	K	
C159			CK73FB1H102K	CHIP C	1000PF	K	
C160			CC73FCH1H470J	CHIP C	47PF	J	
C161			CC73FCH1H820J	CHIP C	82PF	J	
C162			CK73FF1E104Z	CHIP C	0.10UF	Z	
C163			CK73FB1E103K	CHIP C	0.010UF	K	
C164			CC73FSL1H471J	CHIP C	470PF	J	
C165			CK73FB1E103K	CHIP C	0.010UF	K	
C166,167			CK73FF1E104Z	CHIP C	0.10UF	Z	
C168			CK73FB1E103K	CHIP C	0.010UF	K	
C169			CC73FCH1H680J	CHIP C	68PF	J	
C170			CK73FF1E104Z	CHIP C	0.10UF	Z	
C171			CC73FCH1H470J	CHIP C	47PF	J	
C172,173			CK73FB1E103K	CHIP C	0.010UF	K	
C174			CC73FSL1H471J	CHIP C	470PF	J	
C175			CC73FCH1H470J	CHIP C	47PF	J	
C176			CE04EW1C470M	ELECTRO	47UF	16WV	
C177			CC73FCH1H050C	CHIP C	5.0PF	C	
C178			CC73FCH1H680J	CHIP C	68PF	J	
C179			CK73FF1E104Z	CHIP C	0.10UF	Z	
C180			CC73FCH1H020C	CHIP C	2.0PF	C	

Ref. No.	Address	New parts	Parts No.	Description			Destination
C181			CC73FCH1H050C	CHIP C	5.0PF	C	
C182			CK73FB1E103K	CHIP C	0.010UF	K	
C184			CC73FCH1H050C	CHIP C	5.0PF	C	
C185			CC73FCH1H220J	CHIP C	22PF	J	
C186			CC73FCH1H050C	CHIP C	5.0PF	C	
C187			CC73FCH1H1R5C	CHIP C	1.5PF	C	
C188			CC73FCH1H220J	CHIP C	22PF	J	
C189			CC73FCH1H0R5C	CHIP C	0.5PF	C	
C190			CK73FB1E103K	CHIP C	0.010UF	K	
C191			CC73FSL1H681J	CHIP C	680PF	J	
C192,193			CK73FB1H102K	CHIP C	1000PF	K	
C194			CC73FSL1H331J	CHIP C	330PF	J	
C195			CC73FSL1H471J	CHIP C	470PF	J	
C196			CK73FB1H102K	CHIP C	1000PF	K	
C197			CK73FB1E103K	CHIP C	0.010UF	K	
C198			CC73FCH1H020C	CHIP C	2.0PF	C	
C199			CK73FB1E103K	CHIP C	0.010UF	K	
C201-206			CK73FB1E103K	CHIP C	0.010UF	K	
C207			CC73FCH1H470J	CHIP C	47PF	J	
C208			CK73FF1E104Z	CHIP C	0.10UF	Z	
C209			CK73FB1H102K	CHIP C	1000PF	K	
C211,212			CK73FF1E104Z	CHIP C	0.10UF	Z	
C214			CK73FB1E103K	CHIP C	0.010UF	K	
C215			CK73FF1E104Z	CHIP C	0.10UF	Z	
C216			CE04EW1C100M	ELECTRO	10UF	16WV	
C217			CK73FF1E104Z	CHIP C	0.10UF	Z	
C218			CC73FCH1H470J	CHIP C	47PF	J	
C219			CK73FF1E104Z	CHIP C	0.10UF	Z	
C220			CE04EW1H010M	ELECTRO	1.0UF	50WV	
C221-223			CK73FF1E104Z	CHIP C	0.10UF	Z	
C224			CK73FB1E103K	CHIP C	0.010UF	K	
C225			CK73FB1H102K	CHIP C	1000PF	K	
C226-228			CK73FB1E103K	CHIP C	0.010UF	K	
C229			CC73FCH1H050C	CHIP C	5.0PF	C	
C230			CK73FB1E103K	CHIP C	0.010UF	K	
C231			CC73FCH1H220J	CHIP C	22PF	J	
C232			CK73FF1E104Z	CHIP C	0.10UF	Z	
C233			CK73FB1H102K	CHIP C	1000PF	K	
C234			CK73FF1E104Z	CHIP C	0.10UF	Z	
C236			CK73FB1E103K	CHIP C	0.010UF	K	
C237			CC73FCH1H220J	CHIP C	22PF	J	
C238			CK73FB1E103K	CHIP C	0.010UF	K	
C239			CK73FB1H471K	CHIP C	470PF	K	
C240,241			CK73FB1E103K	CHIP C	0.010UF	K	
C242			CC73FSL1H471J	CHIP C	470PF	J	
C243,244			CK73FB1E103K	CHIP C	0.010UF	K	
C245			CC73FSL1H471J	CHIP C	470PF	J	
C246			CC73FCH1H010C	CHIP C	1.0PF	C	
C247			CC73FSL1H471J	CHIP C	470PF	J	
C248			CK73FB1E103K	CHIP C	0.010UF	K	
C249			CC73FCH1H0R5C	CHIP C	0.5PF	C	
C250			CC73FCH1H010C	CHIP C	1.0PF	C	
C251-253			CK73FB1E103K	CHIP C	0.010UF	K	
C254			CK73FF1E104Z	CHIP C	0.10UF	Z	
C256,257			CK73FB1E103K	CHIP C	0.010UF	K	
C260			CK73FB1E103K	CHIP C	0.010UF	K	
C262,263			CK73FB1E103K	CHIP C	0.010UF	K	
C265-273			CK73FB1E103K	CHIP C	0.010UF	K	
C274			CC73FCH1H180J	CHIP C	18PF	J	

PARTS LSIT

RF UNIT (X44-3210-00)

Ref. No.	Address	New parts	Parts No.	Description			Destination
C275			CC73FCH1H150J	CHIP C	15PF	J	
C276			CC73FCH1H180J	CHIP C	18PF	J	
C277-279			CK73FB1E103K	CHIP C	0.010UF	K	
C280			CC73FCH1H101J	CHIP C	100PF	J	
C281,282			CC73FCH1H220J	CHIP C	22PF	J	
C283			CC73FCH1H330J	CHIP C	33PF	J	
C285			CK73FB1E223K	CHIP C	0.022UF	K	
C286			CE04EW1H010M	ELECTRO	1.0UF	50WV	
C287			CE04EW1C100M	ELECTRO	10UF	16WV	
C288			CK73FB1H473K	CHIP C	0.047UF	K	
C289			CE04EW1C100M	ELECTRO	10UF	16WV	
C290			CK73FB1E103K	CHIP C	0.010UF	K	
C291			CE04EW1HR47M	ELECTRO	0.47UF	50WV	
C292			CK73FB1E103K	CHIP C	0.010UF	K	
C293			CC73FCH1H101J	CHIP C	100PF	J	
C294			CK73FF1E104Z	CHIP C	0.10UF	Z	
C295-298			CK73FB1E103K	CHIP C	0.010UF	K	
C299,300			CK73FB1H103K	CHIP C	0.010UF	K	
C301			CK73FB1H102K	CHIP C	1000PF	K	
C302			CK73FB1H103K	CHIP C	0.010UF	K	
C303			CK73FB1H102K	CHIP C	1000PF	K	
C304			CK45FE2H222P	CERAMIC	2200PF	P	
C305			CK73FB1H103K	CHIP C	0.010UF	K	
C306,307			CK73FB1H102K	CHIP C	1000PF	K	
C308			CK73FB1H103K	CHIP C	0.010UF	K	
C310			CK73FB1H103K	CHIP C	0.010UF	K	
C312			CE04EW1C100M	ELECTRO	10UF	16WV	
C313,314			CK73FB1H103K	CHIP C	0.010UF	K	
C315			CE04EW1C100M	ELECTRO	10UF	16WV	
C316-327			CK73FB1H102K	CHIP C	1000PF	K	
C328-331			CK73FB1E103K	CHIP C	0.010UF	K	
C332			CK73FB1H102K	CHIP C	1000PF	K	
C333			CK73FB1E103K	CHIP C	0.010UF	K	
C334			CC73FCH1H330J	CHIP C	33PF	J	
C335			CK73FB1E103K	CHIP C	0.010UF	K	
C338			CC73FSL1H221J	CHIP C	220PF	J	
C339,340			CC73FCH1H220J	CHIP C	22PF	J	
C341-346			CK73FB1E103K	CHIP C	0.010UF	K	
C347,348			CC73FCH1H100D	CHIP C	10PF	D	
C350			C92-0004-05	CHIP-TAN	1.0UF	16WV	
C500			CK73FB1E103K	CHIP C	0.010UF	K	
C501			CE04NW1C100M	ELECTRO	10UF	16WV	
C502			CK73FB1E103K	CHIP C	0.010UF	K	
C503			CE04NW1C100M	ELECTRO	10UF	16WV	
C504			CK73FB1E103K	CHIP C	0.010UF	K	
C505			CE04EW1C100M	ELECTRO	10UF	16WV	
C506			CK73FB1E103K	CHIP C	0.010UF	K	
C507			CE04NW1C100M	ELECTRO	10UF	16WV	
C508			CK73FB1E103K	CHIP C	0.010UF	K	
C509			CE04NW1C100M	ELECTRO	10UF	16WV	
C510			CK73FB1E103K	CHIP C	0.010UF	K	
C511			CE04EW1C100M	ELECTRO	10UF	16WV	
C512,513			CK73FB1E103K	CHIP C	0.010UF	K	
C514			C92-0516-05	CHIP-TAN	4.7UF	16WV	
C515			CC73FSL1H271J	CHIP C	270PF	J	
C516			CC73FSL1H561J	CHIP C	560PF	J	
C517			CK73FB1E103K	CHIP C	0.010UF	K	
C518			CC73FSL1H271J	CHIP C	270PF	J	
C519,520			CK73FB1E103K	CHIP C	0.010UF	K	

Ref. No.	Address	New parts	Parts No.	Description			Destination
C521			CE04EW1C100M	ELECTRO	10UF	16WV	
C522			CK73FB1E103K	CHIP C	0.010UF	K	
C523			CC73FCH1H121J	CHIP C	120PF	J	
C524			CC73FSL1H181J	CHIP C	180PF	J	
C525			CC73FCH1H121J	CHIP C	120PF	J	
C526-530			CK73FB1E103K	CHIP C	0.010UF	K	
C531			CC73FCH1H560J	CHIP C	56PF	J	
C532			CC73FSL1H391J	CHIP C	390PF	J	
C533			CC73FCH1H390J	CHIP C	39PF	J	
C534			CC73FCH1H680J	CHIP C	68PF	J	
C535			CC73FCH1H390J	CHIP C	39PF	J	
C536			CC73FCH1H101J	CHIP C	100PF	J	
C537			CC73FCH1H680J	CHIP C	68PF	J	
C538			CC73FCH1H390J	CHIP C	39PF	J	
C539			CC73FCH1H070D	CHIP C	7.0PF	D	
C540			CC73FCH1H680J	CHIP C	68PF	J	
C541			CC73FCH1H220J	CHIP C	22PF	J	
C542			CC73FCH1H330J	CHIP C	33PF	J	
C543-545			CK73FB1E103K	CHIP C	0.010UF	K	
C546			CC73FCH1H121J	CHIP C	120PF	J	
C547			CE04EW1C470M	ELECTRO	47UF	16WV	
C548-555			CK73FB1E103K	CHIP C	0.010UF	K	
C556			CK73FB1H102K	CHIP C	1000PF	K	
C557			CC73FCH1H330J	CHIP C	33PF	J	
C558			CC73FCH1H0R5C	CHIP C	0.5PF	C	
C560			CC73FCH1H0R5C	CHIP C	0.5PF	C	
C561			CC73FCH1H330J	CHIP C	33PF	J	
C562-564			CK73FB1E103K	CHIP C	0.010UF	K	
C565			C92-0516-05	CHIP-TAN	4.7UF	16WV	
C566,567			CC73FCH1H470J	CHIP C	47PF	J	
C568			CC73FCH1H101J	CHIP C	100PF	J	
C569			CE04EW1C100M	ELECTRO	10UF	16WV	
C570,571			CK73FB1E103K	CHIP C	0.010UF	K	
C572			CC73FCH1H100D	CHIP C	10PF	D	
C573			CC73FCH1H050C	CHIP C	5.0PF	C	
C574-576			CK73FB1E103K	CHIP C	0.010UF	K	
C577			CK73FB1H331K	CHIP C	330PF	K	
C578			CC73FCH1H620J	CHIP C	62PF	J	
C579			CK73FB1H331K	CHIP C	330PF	K	
C581			CC73FCH1H820J	CHIP C	82PF	J	
C583			CK73FB1H103K	CHIP C	0.010UF	K	
C584			CE04EW1C100M	ELECTRO	10UF	16WV	
C585			CK73FB1H103K	CHIP C	0.010UF	K	
C586			CK73FB1H682K	CHIP C	6800PF	K	
C587			CK73FB1H123K	CHIP C	0.012UF	K	
C588			CK73FB1H682K	CHIP C	6800PF	K	
C591			CK73FB1H103K	CHIP C	0.010UF	K	
C593			CK73FB1H102K	CHIP C	1000PF	K	
C594			CC73FSL1H221J	CHIP C	220PF	J	
C595			CK73FB1H103K	CHIP C	0.010UF	K	
C596			CC73FCH1H0R5C	CHIP C	0.5PF	C	
C597			CC73FCH1H270J	CHIP C	27PF	J	
C598-602			CK73FB1H103K	CHIP C	0.010UF	K	
C603			CK73FB1H102K	CHIP C	1000PF	K	
C604			CK73FB1H103K	CHIP C	0.010UF	K	
C606			CC73FCH1H270J	CHIP C	27PF	J	
C618			CE04EW1C101M	ELECTRO	100UF	16WV	
C619			C92-0001-05	CHIP-TAN	0.10UF	35WV	
C620-623			CK73FB1H102K	CHIP C	1000PF	K	

PARTS LIST

RF UNIT (X44-3210-00)

Ref. No.	Address	New parts	Parts No.	Description			Destination
C624			CK73FB1E103K	CHIP C	0.010UF	K	
C625-628			CK73FB1H102K	CHIP C	1000PF	K	
C629			CE04EW1C101M	ELECTRO	100UF	16WV	
C630,631			CK73FB1E103K	CHIP C	0.010UF	K	
C630,631			CK73FB1E103K	CHIP C	0.010UF	K	
C632			CE04EW1C101M	ELECTRO	100UF	16WV	
C633			CC73FCH1H101J	CHIP C	100PF	J	
C634			CC73FCH1H180J	CHIP C	18PF	J	
C635			CK73FB1H102K	CHIP C	1000PF	K	
C636			CC73FCH1H330J	CHIP C	33PF	J	
C637			CC73FCH1H080D	CHIP C	8.0PF	D	
C638			CC73FCH1H120J	CHIP C	12PF	J	
C639			CC73FCH1H560J	CHIP C	56PF	J	
C640			CK73FB1H183K	CHIP C	0.018UF	K	
C641			CC73FCH1H120J	CHIP C	12PF	J	
C642			CK73FB1H102K	CHIP C	1000PF	K	
C643			CC73FCH1H330J	CHIP C	33PF	J	
C644			CC73FCH1H120J	CHIP C	12PF	J	
C645			CC73FCH1H150J	CHIP C	15PF	J	
C646			CC73FCH1H390J	CHIP C	39PF	J	
C647			CC73FCH1H100D	CHIP C	10PF	D	
C648			CK73FB1H102K	CHIP C	1000PF	K	
C649			CC73FCH1H160J	CHIP C	16PF	J	
C650			CC73FCH1H240J	CHIP C	24PF	J	
C651			CC73FCH1H150J	CHIP C	15PF	J	
C652			CC73FCH1H390J	CHIP C	39PF	J	
C653			CK73FB1H183K	CHIP C	0.018UF	K	
C654			CC73FCH1H040C	CHIP C	4.0PF	C	
C655			CK73FB1H102K	CHIP C	1000PF	K	
C656			CC73FCH1H150J	CHIP C	15PF	J	
C657			CC73FCH1H200J	CHIP C	20PF	J	
C658			CC73FCH1H160J	CHIP C	16PF	J	
C659,660			CK73FB1H102K	CHIP C	1000PF	K	
C661			CC73FCH1H100D	CHIP C	10PF	D	
C662			CC73FCH1H030C	CHIP C	3.0PF	C	
C663			CC73FCH1H020C	CHIP C	2.0PF	C	
C664			CC73FCH1H040C	CHIP C	4.0PF	C	
C665,666			CK73FB1H102K	CHIP C	1000PF	K	
C667			CK73FB1E103K	CHIP C	0.010UF	K	
C668			CK73FB1H102K	CHIP C	1000PF	K	
C669			CK73FB1E103K	CHIP C	0.010UF	K	
C670			CK73FB1H102K	CHIP C	1000PF	K	
C671			CC73FCH1H240J	CHIP C	24PF	J	
C672			CK73FB1H102K	CHIP C	1000PF	K	
C673			CC73FCH1H010C	CHIP C	1.0PF	C	
C674			CC73FCH1H240J	CHIP C	24PF	J	
C675			CK73FB1E103K	CHIP C	0.010UF	K	
C676			C92-0004-05	CHIP-TAN	1.0UF	16WV	
C677			CE04EW1C221M	ELECTRO	220UF	16WV	
C678			CK73FB1E103K	CHIP C	0.010UF	K	
C679			CQ92M1H822K	MYLAR	8200PF	K	
C680			C91-1083-05	FILM	0.47UF	63WV	
C681			CK73FB1H102K	CHIP C	1000PF	K	
C682,683			CK73FB1E103K	CHIP C	0.010UF	K	
C684			CK73FB1H103K	CHIP C	0.010UF	K	
C685,686			CK73FB1E103K	CHIP C	0.010UF	K	
C687			CC73FCH1H020C	CHIP C	2.0PF	C	
C688			CC73FCH1H1R5C	CHIP C	1.5PF	C	
C689			CC73FCH1H030C	CHIP C	3.0PF	C	

Ref. No.	Address	New parts	Parts No.	Description			Destination
C690			CC73FCH1H470J	CHIP C	47PF	J	
C691			CC73FCH1H270J	CHIP C	27PF	J	
C692-696			CK73FB1E103K	CHIP C	0.010UF	K	
C697			CE04EW1C100M	ELECTRO	10UF	16WV	
C698			CK73FB1H102K	CHIP C	1000PF	K	
C699			CK73FB1E103K	CHIP C	0.010UF	K	
C700			CK73FB1H102K	CHIP C	1000PF	K	
C701			CC73FCH1H330J	CHIP C	33PF	J	
C702			CC73FCH1H100D	CHIP C	10PF	D	
C703			CC73FCH1H680J	CHIP C	68PF	J	
C704,705			CK73FB1H103K	CHIP C	0.010UF	K	
C706			CE04EW1C470M	ELECTRO	47UF	16WV	
C707			CK73FB1H103K	CHIP C	0.010UF	K	
C708			CE04EW1C101M	ELECTRO	100UF	16WV	
C710			CK73FB1H102K	CHIP C	1000PF	K	
C711			CQ92M1H333K	MYLAR	0.033UF	K	
C712			C91-1083-05	FILM	0.47UF	63WV	
C713			CK73FB1H103K	CHIP C	0.010UF	K	
C714			C92-0516-05	CHIP-TAN	4.7UF	16WV	
C715,716			CK73FB1H102K	CHIP C	1000PF	K	
C717			CE04EW1C101M	ELECTRO	100UF	16WV	
C719			CC73FCH1H020C	CHIP C	2.0PF	C	
C721-726			CC73FCH1H270J	CHIP C	27PF	J	
C727,728			CC73FCH1H100D	CHIP C	10PF	D	
C729			CC73FCH1H020C	CHIP C	2.0PF	C	
C730-732			CK73FB1H102K	CHIP C	1000PF	K	
C744			CK73FB1H102K	CHIP C	1000PF	K	
C750-757			CC73FCH1H101J	CHIP C	100PF	J	
C758-761			CK73FB1H102K	CHIP C	1000PF	K	
C762			CC73FCH1H101J	CHIP C	100PF	J	
C770			CE04EW1C470M	ELECTRO	47UF	16WV	
C771			CK73FB1H103K	CHIP C	0.010UF	K	
C780			CE04EW1E470M	ELECTRO	47UF	25WV	
C781,782			CK73FF1E104Z	CHIP C	0.10UF	Z	
C783			CE04EW1C470M	ELECTRO	47UF	16WV	
C784			CE04EW1E470M	ELECTRO	47UF	25WV	
C785,786			CK73FF1E104Z	CHIP C	0.10UF	Z	
C787			CE04EW1C470M	ELECTRO	47UF	16WV	
C800			CC73FCH1H390J	CHIP C	39PF	J	
C801			CC73FCH1H151J	CHIP C	150PF	J	
C802			CC73FCH1H390J	CHIP C	39PF	J	
C803			CC73FCH1H050C	CHIP C	5.0PF	C	
C804			CK73FB1H103K	CHIP C	0.010UF	K	
C805			CC73FCH1H020C	CHIP C	2.0PF	C	
C806,807			CK73FB1H103K	CHIP C	0.010UF	K	
C808			C92-0004-05	CHIP-TAN	1.0UF	16WV	
C907-912			CK73FB1H102K	CHIP C	1000PF	K	
C914-926			CK73FB1H102K	CHIP C	1000PF	K	
TC506,507			C05-0377-05	TRIMMER CAPACITOR		10PF	
TC508,509			C05-0376-05	TRIMMER CAPACITOR		6PF	
TC800			C05-0344-05	TRIMMER CAPACITOR		30PF	
CN2			E04-0154-05	RF COAXIAL CABLE SOCKET			
CN4			E04-0154-05	RF COAXIAL CABLE SOCKET			
CN5,6			E04-0191-05	RF COAXIAL CABLE SOCKET			
CN7			E40-3238-05	PIN CONNECTOR (3P)			
CN10			E04-0154-05	RF COAXIAL CABLE SOCKET			
CN13		*	E40-5741-05	PIN CONNECTOR (8P)			
CN14		*	E40-5740-05	PIN CONNECTOR (20P)			

PARTS LSIT

RF UNIT (X44-3210-00)

Ref. No.	Address	New parts	Parts No.	Description	Destination
CN15-17			E04-0154-05	RF COAXIAL CABLE SOCKET	
CN500		*	E40-5740-05	PIN CONNECTOR (20P)	
CN501			E40-3237-05	PIN CONNECTOR (2P)	
CN502-505			E04-0154-05	RF COAXIAL CABLE SOCKET (2P)	
CN506			E40-3238-05	PIN CONNECTOR (3P)	
CN508			E40-5606-05	PIN CONNECTOR (3P)	
CN509			E40-5607-05	PIN CONNECTOR (4P)	
CN510			E23-0996-05	TERMINAL (TEST)	
CN800			E40-4463-05	PIN CONNECTOR	
CN801			E40-4464-05	PIN CONNECTOR	
CN901			E40-3300-05	PIN CONNECTOR (3P)	
CN903-907		*	E40-5743-05	FLAT CABLE CONNECTOR (6P)	
J1			E06-0752-05	DIN SOCKET	
J2,3			E13-0166-05	PIN JACK	
J901		*	E11-0462-05	PHONE JACK	
W1		*	E37-0546-05	LEAD WIRE WITH CONNECTOR	
W2		*	E37-0517-05	LEAD WIRE WITH MINIPIN PLUG	
101	2F		F11-1141-04	SHIELDING COVER	
A502	2F		F11-1140-04	SHIELDING CASE	
–			J30-0545-05	SPACER (TO XF1)	
–			J30-0563-05	SPACER (TO XF3, X800)	
CF500,501			L72-0343-05	CERAMIC FILTER (8.4MHZ)	
L1		*	L39-1254-05	COIL	
L2			L19-0324-05	TROIDAL COIL	
L3			L40-1021-14	SMALL FIXED INDUCTOR	
L7			L40-2701-14	SMALL FIXED INDUCTOR	
L8			L40-4791-14	SMALL FIXED INDUCTOR	
L9			L40-2701-14	SMALL FIXED INDUCTOR	
L10			L40-1015-48	SMALL FIXED INDUCTOR (100UH)	
L11			L19-0324-05	TROIDAL COIL	
L12			L40-1005-48	SMALL FIXED INDUCTOR (10UH)	
L13			L40-4705-48	SMALL FIXED INDUCTOR (47UH)	
L14,15			L40-1501-14	SMALL FIXED INDUCTOR	
L16			L40-1021-14	SMALL FIXED INDUCTOR	
L17,18			L40-5691-14	SMALL FIXED INDUCTOR	
L19			L40-1292-14	SMALL FIXED INDUCTOR	
L20			L40-8291-14	SMALL FIXED INDUCTOR	
L21,22			L40-1292-14	SMALL FIXED INDUCTOR	
L23			L40-5691-14	SMALL FIXED INDUCTOR	
L24			L40-1292-14	SMALL FIXED INDUCTOR	
L25			L40-1092-14	SMALL FIXED INDUCTOR	
L26			L40-3391-14	SMALL FIXED INDUCTOR	
L27			L40-1092-14	SMALL FIXED INDUCTOR	
L28-31			L34-4262-05	COIL	
L32			L40-3382-14	SMALL FIXED INDUCTOR	
L33			L40-2792-14	SMALL FIXED INDUCTOR	
L34			L40-3382-14	SMALL FIXED INDUCTOR	
L35			L40-2282-14	SMALL FIXED INDUCTOR	
L36			L40-2292-14	SMALL FIXED INDUCTOR	
L37			L40-2282-14	SMALL FIXED INDUCTOR	
L38-40			L34-4289-05	COIL	
L41			L40-2282-14	SMALL FIXED INDUCTOR	
L42			L40-1292-14	SMALL FIXED INDUCTOR	
L43			L40-2282-14	SMALL FIXED INDUCTOR	
L44-46		*	L34-4392-05	COIL	
L47			L40-2282-14	SMALL FIXED INDUCTOR	
L48			L40-1292-14	SMALL FIXED INDUCTOR	

Ref. No.	Address	New parts	Parts No.	Description	Destination
L49			L40-2282-14	SMALL FIXED INDUCTOR	
L50			L34-4264-05	COIL	
L51			L40-1021-14	SMALL FIXED INDUCTOR	
L52			L34-4265-05	COIL	
L53			L19-0324-05	TROIDAL COIL	
L54			L40-4785-48	SMALL FIXED INDUCTOR (470NH)	
L55			L19-0324-05	TROIDAL COIL	
L56			L40-4705-48	SMALL FIXED INDUCTOR (47UH)	
L57			L40-2785-48	SMALL FIXED INDUCTOR (270NH)	
L58			L40-2285-48	SMALL FIXED INDUCTOR (220NH)	
L59			L19-0324-05	TROIDAL COIL	
L60			L39-1255-05	COIL	
L61			L40-1285-48	SMALL FIXED INDUCTOR (120NH)	
L62			L39-1255-05	COIL	
L63			L40-1015-48	SMALL FIXED INDUCTOR (100NH)	
L64			L39-1255-05	COIL	
L65			L34-4222-05	COIL	
L67		*	L34-4394-05	COIL	
L68			L40-1015-48	SMALL FIXED INDUCTOR (100UH)	
L69			L40-2285-48	SMALL FIXED INDUCTOR (220NH)	
L70		*	L34-4393-05	COIL	
L71			L40-3395-48	SMALL FIXED INDUCTOR (3.3UH)	
L72		*	L34-4394-05	COIL	
L73			L40-2295-48	SMALL FIXED INDUCTOR (2.2UH)	
L74			L40-2285-48	SMALL FIXED INDUCTOR (220NH)	
L75			L34-4209-05	COIL	
L76			L40-3395-48	SMALL FIXED INDUCTOR (3.3UH)	
L77			L34-0943-05	COIL	
L78			L40-4785-48	SMALL FIXED INDUCTOR (470NH)	
L79			L40-3395-48	SMALL FIXED INDUCTOR (3.3UH)	
L81			L34-0535-05	COIL	
L82			L34-0536-05	COIL	
L83,84			L40-1015-48	SMALL FIXED INDUCTOR (100UH)	
L86			L40-2285-48	SMALL FIXED INDUCTOR (220NH)	
L87			L40-4705-48	SMALL FIXED INDUCTOR (47UH)	
L88			L19-0324-05	TROIDAL COIL	
L89		*	L34-4395-05	COIL	
L90			L39-1255-05	COIL	
L91		*	L34-4395-05	COIL	
L92			L34-4211-05	COIL	
L93			L40-1015-48	SMALL FIXED INDUCTOR (100UH)	
L94		*	L34-4395-05	COIL	
L95			L34-4207-05	COIL	
L98			L34-0943-05	COIL	
L99			L34-0781-05	COIL	
L100			L34-0536-05	COIL	
L101			L40-4705-48	SMALL FIXED INDUCTOR (47UH)	
L102			L40-3395-48	SMALL FIXED INDUCTOR (3.3UH)	
L107			L40-1015-48	SMALL FIXED INDUCTOR (100UH)	
L108			L40-1005-48	SMALL FIXED INDUCTOR (10UH)	
L110,111		*	L40-1805-48	SMALL FIXED INDUCTOR (18UH)	
L112,113		*	L40-1081-42	SMALL FIXED INDUCTOR (0.1UH)	
L301		*	L40-1001-42	SMALL FIXED INDUCTOR (10UH)	
L304-310		*	L40-1001-42	SMALL FIXED INDUCTOR (10UH)	
L314-318		*	L40-1001-42	SMALL FIXED INDUCTOR (10UH)	
L500-505			L40-1005-48	SMALL FIXED INDUCTOR (10UH)	
L506,507		*	L40-6805-48	SMALL FIXED INDUCTOR (68UH)	
L508			L40-1005-48	SMALL FIXED INDUCTOR (10UH)	
L509,510		*	L40-2705-48	SMALL FIXED INDUCTOR (27UH)	

PARTS LIST

RF UNIT (X44-3210-00)

Ref. No.	Address	New parts	Parts No.	Description	Destination
L511		*	L40-1805-48	SMALL FIXED INDUCTOR (18UH)	
L512,513		*	L40-2705-48	SMALL FIXED INDUCTOR (27UH)	
L514			L40-2205-48	SMALL FIXED INDUCTOR (22UH)	
L515		*	L40-1805-48	SMALL FIXED INDUCTOR (18UH)	
L516			L40-5695-48	SMALL FIXED INDUCTOR (5.6UH)	
L517			L40-1005-48	SMALL FIXED INDUCTOR (10UH)	
L518			L34-4222-05	COIL	
L519		*	L34-4421-05	COIL	
L520			L34-4222-05	COIL	
L521,522			L40-2285-48	SMALL FIXED INDUCTOR (220NH)	
L523			L40-1005-48	SMALL FIXED INDUCTOR (10UH)	
L524			L40-1095-48	SMALL FIXED INDUCTOR (1UH)	
L525,526			L40-2205-48	SMALL FIXED INDUCTOR (22UH)	
L528		*	L34-4396-05	COIL	
L529,530			L34-4222-05	COIL	
L531-534			L40-1015-48	SMALL FIXED INDUCTOR (100UH)	
L535			L33-0664-05	CHOKE COIL	
L536			L34-2354-05	COIL	
L537			L40-4795-48	SMALL FIXED INDUCTOR (4.7UH)	
L538			L33-0664-05	CHOKE COIL	
L539			L34-2354-05	COIL	
L540			L40-4795-48	SMALL FIXED INDUCTOR (4.7UH)	
L541			L33-0664-05	CHOKE COIL	
L542			L34-2354-05	COIL	
L543			L40-4795-48	SMALL FIXED INDUCTOR (4.7UH)	
L544			L33-0664-05	CHOKE COIL	
L545			L34-2354-05	COIL	
L546			L40-4795-48	SMALL FIXED INDUCTOR (4.7UH)	
L547			L40-3385-48	SMALL FIXED INDUCTOR (330NH)	
L548			L40-1295-48	SMALL FIXED INDUCTOR (1.2UH)	
L549			L40-3385-48	SMALL FIXED INDUCTOR (330NH)	
L550			L40-2285-48	SMALL FIXED INDUCTOR (220NH)	
L551			L40-1015-48	SMALL FIXED INDUCTOR (100NH)	
L552		*	L40-2795-48	SMALL FIXED INDUCTOR (2.7UH)	
L553			L40-1595-48	SMALL FIXED INDUCTOR (1.5UH)	
L554			L40-2295-48	SMALL FIXED INDUCTOR (2.2UH)	
L555			L40-3395-48	SMALL FIXED INDUCTOR (3.3UH)	
L556			L40-2285-48	SMALL FIXED INDUCTOR (220NH)	
L557-559			L40-1015-48	SMALL FIXED INDUCTOR (100UH)	
L580,581			L40-1005-48	SMALL FIXED INDUCTOR (10UH)	
L601			L40-3395-48	SMALL FIXED INDUCTOR (3.3UH)	
L603			L40-2785-48	SMALL FIXED INDUCTOR (270NH)	
L604			L40-1015-48	SMALL FIXED INDUCTOR (100UH)	
X800			L77-1521-15	CRYSTAL RESONATOR (20MHZ)	
XF1			L71-0401-05	CRYSTAL FILTER (73.05MHZ)	
XF2			L71-0235-05	CRYSTAL FILTER	
XF3			L71-0266-05	CRYSTAL FILTER (8830KHZ)	
Q	2F		N38-2640-46	PAN HEAD MACHINE SCREW	
CP500-505			R90-0721-05	MULTI-COMP 4.7K X 16	
R1			RD14BB2E470J	RD 47 J 1/4W	
R2			RD14BB2E151J	RD 150 J 1/4W	
R3			RK73FB2A101J	CHIP R 100 J 1/10W	
R5			RD14BB2E101J	RD 100 J 1/4W	
R7			RD14BB2E820J	RD 82 J 1/4W	
R9			RK73FB2A221J	CHIP R 220 J 1/10W	
R10			RK73FB2A181J	CHIP R 180 J 1/10W	
R11,12			RK73FB2A331J	CHIP R 330 J 1/10W	
R13			RK73FB2A470J	CHIP R 47 J 1/10W	

Ref. No.	Address	New parts	Parts No.	Description	Destination
R14			RK73FB2A222J	CHIP R 2.2K J 1/10W	
R18			RK73FB2A103J	CHIP R 10K J 1/10W	
R19			RK73FB2A330J	CHIP R 33 J 1/10W	
R20			RK73FB2A102J	CHIP R 1.0K J 1/10W	
R21,22			RK73FB2A330J	CHIP R 33 J 1/10W	
R23			RK73FB2A101J	CHIP R 100 J 1/10W	
R24			RK73FB2A222J	CHIP R 2.2K J 1/10W	
R25			RK73FB2A561J	CHIP R 560 J 1/10W	
R27			RK73FB2A181J	CHIP R 180 J 1/10W	
R28			RK73FB2A680J	CHIP R 68 J 1/10W	
R31			RK73FB2A103J	CHIP R 10K J 1/10W	
R44-55			RK73FB2A223J	CHIP R 22K J 1/10W	
R56			RK73FB2A121J	CHIP R 120 J 1/10W	
R58			RK73FB2A680J	CHIP R 68 J 1/10W	
R59,60			RK73FB2A560J	CHIP R 56 J 1/10W	
R61			RK73FB2A680J	CHIP R 68 J 1/10W	
R62			RK73FB2A220J	CHIP R 22 J 1/10W	
R63			RK73FB2A121J	CHIP R 120 J 1/10W	
R65			RK73FB2A220J	CHIP R 22 J 1/10W	
R66			RK73FB2A121J	CHIP R 120 J 1/10W	
R68			RK73FB2A220J	CHIP R 22 J 1/10W	
R69			RK73FB2A121J	CHIP R 120 J 1/10W	
R71			RK73FB2A220J	CHIP R 22 J 1/10W	
R72			RK73FB2A121J	CHIP R 120 J 1/10W	
R74			RK73FB2A220J	CHIP R 22 J 1/10W	
R75			RK73FB2A121J	CHIP R 120 J 1/10W	
R77			RK73FB2A220J	CHIP R 22 J 1/10W	
R78			RK73FB2A121J	CHIP R 120 J 1/10W	
R80			RK73FB2A220J	CHIP R 22 J 1/10W	
R81			RK73FB2A121J	CHIP R 120 J 1/10W	
R83			RK73FB2A220J	CHIP R 22 J 1/10W	
R84			RK73FB2A121J	CHIP R 120 J 1/10W	
R86			RK73FB2A220J	CHIP R 22 J 1/10W	
R87			RK73FB2A121J	CHIP R 120 J 1/10W	
R89			RK73FB2A220J	CHIP R 22 J 1/10W	
R90			RK73FB2A121J	CHIP R 120 J 1/10W	
R92			RK73FB2A151J	CHIP R 150 J 1/10W	
R93			RK73FB2A223J	CHIP R 22K J 1/10W	
R94			RK73FB2A104J	CHIP R 100K J 1/10W	
R95			RK73FB2A393J	CHIP R 39K J 1/10W	
R96,97			RK73FB2A330J	CHIP R 33 J 1/10W	
R98			RK73FB2A473J	CHIP R 47K J 1/10W	
R99			RK73FB2A151J	CHIP R 150 J 1/10W	
R100			RK73FB2A331J	CHIP R 330 J 1/10W	
R101			RK73FB2A221J	CHIP R 220 J 1/10W	
R102			RK73FB2A101J	CHIP R 100 J 1/10W	
R103			RK73FB2A473J	CHIP R 47K J 1/10W	
R104,105			RK73FB2A151J	CHIP R 150 J 1/10W	
R106			RK73FB2A152J	CHIP R 1.5K J 1/10W	
R107			RK73FB2A680J	CHIP R 68 J 1/10W	
R108			RK73FB2A220J	CHIP R 22 J 1/10W	
R109			RK73FB2A100J	CHIP R 10 J 1/10W	
R110			RK73FB2A151J	CHIP R 150 J 1/10W	
R111			RK73FB2A471J	CHIP R 470 J 1/10W	
R112			RK73FB2A102J	CHIP R 1.0K J 1/10W	
R113			RK73FB2A471J	CHIP R 470 J 1/10W	
R114			RK73FB2A562J	CHIP R 5.6K J 1/10W	
R115			RK73FB2A220J	CHIP R 22 J 1/10W	
R116			RK73FB2A150J	CHIP R 15 J 1/10W	

PARTS LSIT

RF UNIT (X44-3210-00)

Ref. No.	Address	New parts	Parts No.	Description			Destination
R117			RK73FB2A471J	CHIP R	470	J 1/10W	
R118			RK73FB2A680J	CHIP R	68	J 1/10W	
R119,120			RK73FB2A331J	CHIP R	330	J 1/10W	
R121			RK73FB2A102J	CHIP R	1.0K	J 1/10W	
R122,123			RK73FB2A100J	CHIP R	10	J 1/10W	
R124			RK73FB2A471J	CHIP R	470	J 1/10W	
R125,126			RK73FB2A100J	CHIP R	10	J 1/10W	
R127			RK73FB2A180J	CHIP R	18	J 1/10W	
R128			RK73FB2A331J	CHIP R	330	J 1/10W	
R130			RK73FB2A331J	CHIP R	330	J 1/10W	
R131			RK73FB2A101J	CHIP R	100	J 1/10W	
R132			RK73FB2A223J	CHIP R	22K	J 1/10W	
R133			RK73FB2A333J	CHIP R	33K	J 1/10W	
R134			RK73FB2A122J	CHIP R	1.2K	J 1/10W	
R139			RK73FB2A104J	CHIP R	100K	J 1/10W	
R140			RK73FB2A473J	CHIP R	47K	J 1/10W	
R142			RK73FB2A473J	CHIP R	47K	J 1/10W	
R143			RK73FB2A471J	CHIP R	470	J 1/10W	
R144			RK73FB2A221J	CHIP R	220	J 1/10W	
R145			RK73FB2A330J	CHIP R	33	J 1/10W	
R146			RK73FB2A471J	CHIP R	470	J 1/10W	
R147			RK73FB2A562J	CHIP R	5.6K	J 1/10W	
R148			RK73FB2A223J	CHIP R	22K	J 1/10W	
R150			RK73FB2A181J	CHIP R	180	J 1/10W	
R154			RK73FB2A471J	CHIP R	470	J 1/10W	
R156			RK73FB2A330J	CHIP R	33	J 1/10W	
R157			RK73FB2A182J	CHIP R	1.8K	J 1/10W	
R158			RK73FB2A330J	CHIP R	33	J 1/10W	
R159			RK73FB2A101J	CHIP R	100	J 1/10W	
R160,161			RK73FB2A222J	CHIP R	2.2K	J 1/10W	
R162			RK73FB2A101J	CHIP R	100	J 1/10W	
R163			RK73FB2A332J	CHIP R	3.3K	J 1/10W	
R164			RK73FB2A152J	CHIP R	1.5K	J 1/10W	
R165			RK73FB2A473J	CHIP R	47K	J 1/10W	
R166			RK73FB2A222J	CHIP R	2.2K	J 1/10W	
R167			RK73FB2A101J	CHIP R	100	J 1/10W	
R168			RK73FB2A393J	CHIP R	39K	J 1/10W	
R169			RK73FB2A102J	CHIP R	1.0K	J 1/10W	
R170			RK73FB2A223J	CHIP R	22K	J 1/10W	
R171,172			RK73FB2A101J	CHIP R	100	J 1/10W	
R173			RK73FB2A393J	CHIP R	39K	J 1/10W	
R174			RK73FB2A223J	CHIP R	22K	J 1/10W	
R175			RK73FB2A102J	CHIP R	1.0K	J 1/10W	
R176			RK73FB2A103J	CHIP R	10K	J 1/10W	
R177			RK73FB2A153J	CHIP R	15K	J 1/10W	
R178			RK73FB2A563J	CHIP R	56K	J 1/10W	
R179			RK73FB2A103J	CHIP R	10K	J 1/10W	
R180			RK73FB2A104J	CHIP R	100K	J 1/10W	
R181			RK73FB2A222J	CHIP R	2.2K	J 1/10W	
R182			RK73FB2A103J	CHIP R	10K	J 1/10W	
R183			RK73FB2A470J	CHIP R	47	J 1/10W	
R184			RK73FB2A121J	CHIP R	120	J 1/10W	
R185			RK73FB2A103J	CHIP R	10K	J 1/10W	
R186			RK73FB2A562J	CHIP R	5.6K	J 1/10W	
R188			RK73FB2A470J	CHIP R	47	J 1/10W	
R189			RK73FB2A152J	CHIP R	1.5K	J 1/10W	
R190			RK73FB2A103J	CHIP R	10K	J 1/10W	
R191			RK73FB2A151J	CHIP R	150	J 1/10W	
R192			RK73FB2A102J	CHIP R	1.0K	J 1/10W	

Ref. No.	Address	New parts	Parts No.	Description			Destination
R195,196			RK73FB2A330J	CHIP R	33	J 1/10W	
R197			RK73FB2A273J	CHIP R	27K	J 1/10W	
R198			RK73FB2A103J	CHIP R	10K	J 1/10W	
R199,200			RK73FB2A221J	CHIP R	220	J 1/10W	
R201			RK73FB2A473J	CHIP R	47K	J 1/10W	
R202,203			RK73FB2A680J	CHIP R	68	J 1/10W	
R204			RK73FB2A101J	CHIP R	100	J 1/10W	
R205,206			RK73FB2A471J	CHIP R	470	J 1/10W	
R207,208			RK73FB2A330J	CHIP R	33	J 1/10W	
R209			RK73FB2A471J	CHIP R	470	J 1/10W	
R210			RK73FB2A102J	CHIP R	1.0K	J 1/10W	
R211			RK73FB2A472J	CHIP R	4.7K	J 1/10W	
R212,213			RK73FB2A330J	CHIP R	33	J 1/10W	
R214			RK73FB2A103J	CHIP R	10K	J 1/10W	
R215			RK73FB2A823J	CHIP R	82K	J 1/10W	
R216			RK73FB2A681J	CHIP R	680	J 1/10W	
R217			RK73FB2A151J	CHIP R	150	J 1/10W	
R218			RK73FB2A332J	CHIP R	3.3K	J 1/10W	
R219			RK73FB2A103J	CHIP R	10K	J 1/10W	
R220			RK73FB2A101J	CHIP R	100	J 1/10W	
R221			RK73FB2A102J	CHIP R	1.0K	J 1/10W	
R222			RK73FB2A103J	CHIP R	10K	J 1/10W	
R223			RK73FB2A392J	CHIP R	3.9K	J 1/10W	
R224			RK73FB2A332J	CHIP R	3.3K	J 1/10W	
R225			RK73FB2A223J	CHIP R	22K	J 1/10W	
R226			RK73FB2A562J	CHIP R	5.6K	J 1/10W	
R229			RK73FB2A103J	CHIP R	10K	J 1/10W	
R230			RK73FB2A152J	CHIP R	1.5K	J 1/10W	
R231,232			RK73FB2A221J	CHIP R	220	J 1/10W	
R233			RK73FB2A152J	CHIP R	1.5K	J 1/10W	
R234			RK73FB2A101J	CHIP R	100	J 1/10W	
R235			RK73FB2A152J	CHIP R	1.5K	J 1/10W	
R236,237			RK73FB2A101J	CHIP R	100	J 1/10W	
R238			RK73FB2A152J	CHIP R	1.5K	J 1/10W	
R239			RK73FB2A101J	CHIP R	100	J 1/10W	
R240			RK73FB2A152J	CHIP R	1.5K	J 1/10W	
R241,242			RK73FB2A331J	CHIP R	330	J 1/10W	
R243			RK73FB2A152J	CHIP R	1.5K	J 1/10W	
R244			RK73FB2A101J	CHIP R	100	J 1/10W	
R245			RK73FB2A152J	CHIP R	1.5K	J 1/10W	
R246			RK73FB2A221J	CHIP R	220	J 1/10W	
R248			RK73FB2A822J	CHIP R	8.2K	J 1/10W	
R249			RK73FB2A222J	CHIP R	2.2K	J 1/10W	
R250			RK73FB2A103J	CHIP R	10K	J 1/10W	
R251			RK73FB2A153J	CHIP R	15K	J 1/10W	
R252			RK73FB2A102J	CHIP R	1.0K	J 1/10W	
R253			RK73FB2A472J	CHIP R	4.7K	J 1/10W	
R256			RK73FB2A472J	CHIP R	4.7K	J 1/10W	
R257			RK73FB2A101J	CHIP R	100	J 1/10W	
R258			RK73FB2A331J	CHIP R	330	J 1/10W	
R259			RK73FB2A104J	CHIP R	100K	J 1/10W	
R260			RK73FB2A102J	CHIP R	1.0K	J 1/10W	
R261			RK73FB2A331J	CHIP R	330	J 1/10W	
R262			RK73FB2A102J	CHIP R	1.0K	J 1/10W	
R263			RK73FB2A332J	CHIP R	3.3K	J 1/10W	
R264			RK73FB2A222J	CHIP R	2.2K	J 1/10W	
R265			RK73FB2A272J	CHIP R	2.7K	J 1/10W	
R266			RK73FB2A332J	CHIP R	3.3K	J 1/10W	
R267			RK73FB2A822J	CHIP R	8.2K	J 1/10W	

PARTS LIST

RF UNIT (X44-3210-00)

Ref. No.	Address	New parts	Parts No.	Description			Destination
R268			RK73FB2A273J	CHIP R	27K	J 1/10W	
R269			RK73FB2A103J	CHIP R	10K	J 1/10W	
R271			RK73FB2A224J	CHIP R	220K	J 1/10W	
R272			RK73FB2A104J	CHIP R	100K	J 1/10W	
R276			RK73FB2A474J	CHIP R	470K	J 1/10W	
R277			RK73FB2A103J	CHIP R	10K	J 1/10W	
R278			RK73FB2A224J	CHIP R	220K	J 1/10W	
R279			RK73FB2A473J	CHIP R	47K	J 1/10W	
R280			RK73FB2A223J	CHIP R	22K	J 1/10W	
R281			RK73FB2A222J	CHIP R	2.2K	J 1/10W	
R284			RK73FB2A224J	CHIP R	220K	J 1/10W	
R285			RK73FB2A103J	CHIP R	10K	J 1/10W	
R286			RK73FB2A101J	CHIP R	100	J 1/10W	
R287			RK73FB2A103J	CHIP R	10K	J 1/10W	
R288			RK73FB2A472J	CHIP R	4.7K	J 1/10W	
R289			RK73FB2A103J	CHIP R	10K	J 1/10W	
R290,291			RK73FB2A472J	CHIP R	4.7K	J 1/10W	
R292,293			RK73FB2A681J	CHIP R	680	J 1/10W	
R294-297			RK73FB2A224J	CHIP R	220K	J 1/10W	
R298			RK73FB2A472J	CHIP R	4.7K	J 1/10W	
R320			RK73FB2A472J	CHIP R	4.7K	J 1/10W	
R322,323			RK73FB2A223J	CHIP R	22K	J 1/10W	
R324			RK73FB2A101J	CHIP R	100	J 1/10W	
R325			RK73FB2A102J	CHIP R	1.0K	J 1/10W	
R329			RK73FB2A224J	CHIP R	220K	J 1/10W	
R330			RK73FB2A104J	CHIP R	100K	J 1/10W	
R331			RK73FB2A684J	CHIP R	680K	J 1/10W	
R332			RK73FB2A103J	CHIP R	10K	J 1/10W	
R333			RK73FB2A680J	CHIP R	68	J 1/10W	
R334			RK73FB2A391J	CHIP R	390	J 1/10W	
R335			RK73FB2A272J	CHIP R	2.7K	J 1/10W	
R336,337			RK73FB2A104J	CHIP R	100K	J 1/10W	
R338			RK73FB2A154J	CHIP R	150K	J 1/10W	
R339			RK73FB2A224J	CHIP R	220K	J 1/10W	
R340			RK73FB2A101J	CHIP R	100	J 1/10W	
R351-362			RK73FB2A103J	CHIP R	10K	J 1/10W	
R363			R92-0670-05	CHIP R	0 OHM		
R380			RK73FB2A682J	CHIP R	6.8K	J 1/10W	
R381			RK73FB2A183J	CHIP R	18K	J 1/10W	
R382			RK73FB2A181J	CHIP R	180	J 1/10W	
R383-385			R92-0670-05	CHIP R	0 OHM		
R386			RK73FB2A330J	CHIP R	33	J 1/10W	
R500			RK73FB2A103J	CHIP R	10K	J 1/10W	
R501			RK73FB2A470J	CHIP R	47	J 1/10W	
R502			RK73FB2A331J	CHIP R	330	J 1/10W	
R503			RK73FB2A472J	CHIP R	4.7K	J 1/10W	
R504			RK73FB2A681J	CHIP R	680	J 1/10W	
R505			RK73FB2A561J	CHIP R	560	J 1/10W	
R506			RK73FB2A333J	CHIP R	33K	J 1/10W	
R507			RK73FB2A101J	CHIP R	100	J 1/10W	
R508			RK73FB2A272J	CHIP R	2.7K	J 1/10W	
R509			RK73FB2A681J	CHIP R	680	J 1/10W	
R510			RK73FB2A470J	CHIP R	47	J 1/10W	
R511			RK73FB2A122J	CHIP R	1.2K	J 1/10W	
R512			RK73FB2A472J	CHIP R	4.7K	J 1/10W	
R513			RK73FB2A103J	CHIP R	10K	J 1/10W	
R514			RK73FB2A220J	CHIP R	22	J 1/10W	
R515			RK73FB2A331J	CHIP R	330	J 1/10W	
R516			RK73FB2A560J	CHIP R	56	J 1/10W	

Ref. No.	Address	New parts	Parts No.	Description			Destination
R517-519			RK73FB2A470J	CHIP R	47	J 1/10W	
R520			RK73FB2A101J	CHIP R	100	J 1/10W	
R521			RK73FB2A223J	CHIP R	22K	J 1/10W	
R522			RK73FB2A331J	CHIP R	330	J 1/10W	
R523			RK73FB2A470J	CHIP R	47	J 1/10W	
R524,525			RK73FB2A102J	CHIP R	1.0K	J 1/10W	
R526			RK73FB2A331J	CHIP R	330	J 1/10W	
R527			RK73FB2A680J	CHIP R	68	J 1/10W	
R528			RK73FB2A391J	CHIP R	390	J 1/10W	
R529			RK73FB2A680J	CHIP R	68	J 1/10W	
R530			RK73FB2A103J	CHIP R	10K	J 1/10W	
R531			RK73FB2A222J	CHIP R	2.2K	J 1/10W	
R532			RK73FB2A151J	CHIP R	150	J 1/10W	
R533			RK73FB2A680J	CHIP R	68	J 1/10W	
R534			RK73FB2A101J	CHIP R	100	J 1/10W	
R535			RK73FB2A471J	CHIP R	470	J 1/10W	
R536			RK73FB2A470J	CHIP R	47	J 1/10W	
R537			RK73FB2A220J	CHIP R	22	J 1/10W	
R545			RK73FB2A103J	CHIP R	10K	J 1/10W	
R546			RK73FB2A821J	CHIP R	820	J 1/10W	
R547			RK73FB2A331J	CHIP R	330	J 1/10W	
R548,549			RK73FB2A470J	CHIP R	47	J 1/10W	
R550			RK73FB2A181J	CHIP R	180	J 1/10W	
R551			RK73FB2A221J	CHIP R	220	J 1/10W	
R552			RK73FB2A101J	CHIP R	100	J 1/10W	
R553			RK73FB2A333J	CHIP R	33K	J 1/10W	
R554			RK73FB2A682J	CHIP R	6.8K	J 1/10W	
R555,556			RK73FB2A101J	CHIP R	100	J 1/10W	
R557			RK73FB2A221J	CHIP R	220	J 1/10W	
R558			RK73FB2A101J	CHIP R	100	J 1/10W	
R559,560			RK73FB2A473J	CHIP R	47K	J 1/10W	
R561,562			RK73FB2A101J	CHIP R	100	J 1/10W	
R563			RK73FB2A102J	CHIP R	1.0K	J 1/10W	
R564			RK73FB2A681J	CHIP R	680	J 1/10W	
R565			RK73FB2A101J	CHIP R	100	J 1/10W	
R566			RK73FB2A471J	CHIP R	470	J 1/10W	
R567			RK73FB2A221J	CHIP R	220	J 1/10W	
R570,571			RK73FB2A222J	CHIP R	2.2K	J 1/10W	
R572			RK73FB2A272J	CHIP R	2.7K	J 1/10W	
R580-583			RK73FB2A223J	CHIP R	22K	J 1/10W	
R584			RK73FB2A101J	CHIP R	100	J 1/10W	
R586			RK73FB2A682J	CHIP R	6.8K	J 1/10W	
R587			RK73FB2A473J	CHIP R	47K	J 1/10W	
R588,589			RK73FB2A101J	CHIP R	100	J 1/10W	
R591			RK73FB2A682J	CHIP R	6.8K	J 1/10W	
R592			RK73FB2A473J	CHIP R	47K	J 1/10W	
R593,594			RK73FB2A101J	CHIP R	100	J 1/10W	
R596			RK73FB2A682J	CHIP R	6.8K	J 1/10W	
R597			RK73FB2A473J	CHIP R	47K	J 1/10W	
R598,599			RK73FB2A101J	CHIP R	100	J 1/10W	
R601			RK73FB2A682J	CHIP R	6.8K	J 1/10W	
R602			RK73FB2A473J	CHIP R	47K	J 1/10W	
R603			RK73FB2A101J	CHIP R	100	J 1/10W	
R604			RK73FB2A470J	CHIP R	47	J 1/10W	
R605			RK73FB2A392J	CHIP R	3.9K	J 1/10W	
R606			RK73FB2A103J	CHIP R	10K	J 1/10W	
R608			RK73FB2A471J	CHIP R	470	J 1/10W	
R609,610			RK73FB2A103J	CHIP R	10K	J 1/10W	
R611			RK73FB2A102J	CHIP R	1.0K	J 1/10W	

PARTS LSIT

RF UNIT (X44-3210-00)

Ref. No.	Address	New parts	Parts No.	Description	Destination
R612			RK73FB2A821J	CHIP R 820 J 1/10W	
R613			RK73FB2A271J	CHIP R 270 J 1/10W	
R614			RK73FB2A101J	CHIP R 100 J 1/10W	
R615			RK73FB2A220J	CHIP R 22 J 1/10W	
R616			RK73FB2A470J	CHIP R 47 J 1/10W	
R617			RK73FB2A392J	CHIP R 3.9K J 1/10W	
R618			RK73FB2A103J	CHIP R 10K J 1/10W	
R619			RK73FB2A220J	CHIP R 22 J 1/10W	
R620			RK73FB2A471J	CHIP R 470 J 1/10W	
R621			RK73FB2A183J	CHIP R 18K J 1/10W	
R622			RK73FB2A122J	CHIP R 1.2K J 1/10W	
R623			RK73FB2A102J	CHIP R 1.0K J 1/10W	
R624			RK73FB2A334J	CHIP R 330K J 1/10W	
R625			RK73FB2A182J	CHIP R 1.8K J 1/10W	
R626			RK73FB2A331J	CHIP R 330 J 1/10W	
R627			RK73FB2A102J	CHIP R 1.0K J 1/10W	
R628			RK73FB2A101J	CHIP R 100 J 1/10W	
R629			RK73FB2A821J	CHIP R 820 J 1/10W	
R630			RK73FB2A822J	CHIP R 8.2K J 1/10W	
R631			RK73FB2A103J	CHIP R 10K J 1/10W	
R632			RK73FB2A102J	CHIP R 1.0K J 1/10W	
R633			RK73FB2A181J	CHIP R 180 J 1/10W	
R634			RK73FB2A331J	CHIP R 330 J 1/10W	
R635			RK73FB2A823J	CHIP R 82K J 1/10W	
R636			RK73FB2A333J	CHIP R 33K J 1/10W	
R637			RK73FB2A101J	CHIP R 100 J 1/10W	
R638			RK73FB2A470J	CHIP R 47 J 1/10W	
R639			RK73FB2A682J	CHIP R 6.8K J 1/10W	
R640			RK73FB2A102J	CHIP R 1.0K J 1/10W	
R641			RK73FB2A151J	CHIP R 150 J 1/10W	
R642			RK73FB2A150J	CHIP R 15 J 1/10W	
R643			RK73FB2A471J	CHIP R 470 J 1/10W	
R644			RK73FB2A103J	CHIP R 10K J 1/10W	
R645			RK73FB2A392J	CHIP R 3.9K J 1/10W	
R646			RK73FB2A822J	CHIP R 8.2K J 1/10W	
R647			RK73FB2A102J	CHIP R 1.0K J 1/10W	
R648			RK73FB2A684J	CHIP R 680K J 1/10W	
R649			RK73FB2A182J	CHIP R 1.8K J 1/10W	
R650			RK73FB2A103J	CHIP R 10K J 1/10W	
R651			RK73FB2A472J	CHIP R 4.7K J 1/10W	
R652			RK73FB2A103J	CHIP R 10K J 1/10W	
R653			RK73FB2A104J	CHIP R 100K J 1/10W	
R655-656			RK73FB2A103J	CHIP R 10K J 1/10W	
R657			RK73FB2A471J	CHIP R 470 J 1/10W	
R658			RK73FB2A101J	CHIP R 100 J 1/10W	
R659			RK73FB2A470J	CHIP R 47 J 1/10W	
R690-697			RK73FB2A221J	CHIP R 220 J 1/10W	
R699			RK73FB2A102J	CHIP R 1.0K J 1/10W	
R710-712			RK73FB2A103J	CHIP R 10K J 1/10W	
R800			RK73FB2A223J	CHIP R 22K J 1/10W	
R801			RK73FB2A103J	CHIP R 10K J 1/10W	
R802			RK73FB2A222J	CHIP R 2.2K J 1/10W	
R803			RK73FB2A271J	CHIP R 270 J 1/10W	
R804			RK73FB2A101J	CHIP R 100 J 1/10W	
R901-902			RK73FB2A101J	CHIP R 100 J 1/10W	
R903-906			RK73FB2A101J	CHIP R 100 J 1/10W	
R908-920			RK73FB2A101J	CHIP R 100 J 1/10W	
R925-928			RK73EB2B221J	CHIP R 220 J 1/8W	
VR2			R12-6417-05	TRIMMING POT. 1K	

Ref. No.	Address	New parts	Parts No.	Description	Destination
VR3			R12-6427-05	TRIMMING POT. 47K	
VR901-904		*	R31-0605-05	VARIABLE RESISTOR 100K	
VR905,906		*	R31-0606-05	VARIABLE RESISTOR 10K	
K1-3			S51-1428-05	RELAY	
K4			S51-1420-05	RELAY	
S800			S31-2420-05	SLIDE SWITCH	
D1-3			LFB01	DIODE	
D4-7			RLS245	DIODE	
D8			1SV128	DIODE	
D10			LFB01	DIODE	
D11			1SV128	DIODE	
D12			RLS135	DIODE	
D13			1SV128	DIODE	
D14			RLS135	DIODE	
D15			1SV128	DIODE	
D16			RLS135	DIODE	
D17			1SV128	DIODE	
D18			RLS135	DIODE	
D19			1SV128	DIODE	
D20			RLS135	DIODE	
D21			1SV128	DIODE	
D22			RLS135	DIODE	
D23			1SV128	DIODE	
D24			RLS135	DIODE	
D25			1SV128	DIODE	
D26			RLS135	DIODE	
D27			1SV128	DIODE	
D28			RLS135	DIODE	
D29			1SV128	DIODE	
D30			RLS135	DIODE	
D31			1SV128	DIODE	
D32			RLS135	DIODE	
D33			1SV128	DIODE	
D35			RLS135	DIODE	
D36			1SV128	DIODE	
D37			RLS135	DIODE	
D38,39			1SV128	DIODE	
D40			RLS135	DIODE	
D41			1SV128	DIODE	
D42,43			DAN235K	DIODE	
D46			HSM88ASR	DIODE	
D47			LFB01	DIODE	
D49			1SV172	DIODE	
D50			RD6.2M(B1)	ZENER DIODE	
D51			B30-2004-05	LED	
D52			RD12M(B2)	ZENER DIODE	
D53,54			1SS355	DIODE	
D55			RD3.0M(B2)	ZENER DIODE	
D56			1SS355	DIODE	
D57			B30-2004-05	LED	
D58			LFB01	DIODE	
D59			1SS355	DIODE	
D60,61			DAN202K	DIODE	
D62-69			1SV128	DIODE	
D70			RD6.2M(B1)	ZENER DIODE	
D71			RD4.7M(B2)	ZENER DIODE	
D72			1SS355	DIODE	
D500			1SV166	DIODE	

PARTS LIST

RF UNIT (X44-3210-00)
FINAL UNIT (X45-351X-XX)

Ref. No.	Address	New parts	Parts No.	Description	Desti-nation
D501			RLS73	DIODE	
D502			1SV166	DIODE	
D503			RLS73	DIODE	
D504			1SV166	DIODE	
D505			RLS73	DIODE	
D506			1SV166	DIODE	
D507			RLS73	DIODE	
D508			1SS181	DIODE	
IC1,2			TC9174F	IC (CMOS I/O EXTENSION)	
IC6			NJM2904M	IC (OP AMP X2)	
IC7			M62363FP	IC (8bit D/A CONVERTER)	
IC8			NJM2902M	IC (OP AMP X4)	
IC9			NJM2903M	IC (COMPARATOR X2)	
IC10			NJM78L05UA	IC (VOLTAGE REGULATOR/ +5V)	
IC500-502			F71022	IC (DDS)	
IC503			UPD74HC390G	IC (DUAL DECADE COUNTER)	
IC505,506			SN16913P	IC (DUBLE BALANCED MIXERS)	
IC507			MB86001PF	IC	
IC508			SN76514N	IC (MIXER)	
IC509			MB86001PF	IC	
IC510			TA78L09F	IC (VOLTAGE REGULATOR/ +9V)	
IC511		*	TA78DS09F	IC	
PL1,2		*	B30-2134-05	LAMP	
Q1			DTA124EK	DIGITAL TRANSISTOR	
Q2			DTC124EK	DIGITAL TRANSISTOR	
Q3			FMA1	TRANSISTOR	
Q5			2SC2954	TRANSISTOR	
Q6			2SC2712(Y)	TRANSISTOR	
Q7-12			FMG4	TRANSISTOR	
Q13			3SK131(M)	FET	
Q14,15		*	2SK2218(5)	FET	
Q16			2SC2954	TRANSISTOR	
Q17-20			2SK520(K44)	FET	
Q21			2SD1624(S)	TRANSISTOR	
Q22			2SC2714(Y)	TRANSISTOR	
Q23,24			3SK131(M)	FET	
Q26,27			2SK520(K43)	FET	
Q28-32			2SC2712(Y)	TRANSISTOR	
Q33			3SK131(M)	FET	
Q35,36			3SK184(R)	FET	
Q37-39			3SK131(M)	FET	
Q42			DTC124EK	DIGITAL TRANSISTOR	
Q43,44			2SC2712(Y)	TRANSISTOR	
Q45,46			DTC143TK	DIGITAL TRANSISTOR	
Q47			2SC2712(Y)	TRANSISTOR	
Q48			DTA124EK	DIGITAL TRANSISTOR	
Q49			2SC2712(Y)	TRANSISTOR	
Q50			2SK208(Y)	FET	
Q51			DTC124EK	DIGITAL TRANSISTOR	
Q52			2SC2712(Y)	TRANSISTOR	
Q54			2SC2712(Y)	TRANSISTOR	
Q55			2SB1188(Q,R)	TRANSISTOR	
Q56			DTC124EK	DIGITAL TRANSISTOR	
Q57,58			2SB1188(Q,R)	TRANSISTOR	
Q59,60			DTC143EK	DIGITAL TRANSISTOR	
Q61			FMC3	TRANSISTOR	
Q62			DTA143EK	DIGITAL TRANSISTOR	
Q63			FMC3	TRANSISTOR	
Q64			DTA143EK	DIGITAL TRANSISTOR	

Ref. No.	Address	New parts	Parts No.	Description	Desti-nation
Q65			2SA1162(Y)	TRANSISTOR	
Q66			DTC114EK	DIGITAL TRANSISTOR	
Q70			DTC114EK	DIGITAL TRANSISTOR	
Q71			DTA114EK	DIGITAL TRANSISTOR	
Q500-503			2SC2712(Y)	TRANSISTOR	
Q504,505			2SK508NV(K53)	FET	
Q506-508			2SC2712(Y)	TRANSISTOR	
Q510,511			2SC2712(Y)	TRANSISTOR	
Q512-514			2SC2714(Y)	TRANSISTOR	
Q515			2SC2712(Y)	TRANSISTOR	
Q516-519			DTC114EK	DIGITAL TRANSISTOR	
Q520-523			2SK508NV(K53)	FET	
Q524,525			2SC2714(Y)	TRANSISTOR	
Q526			2SC2996(Y,O)	TRANSISTOR	
Q527-529			2SC3722K(R)	TRANSISTOR	
Q530			2SC2712(Y)	TRANSISTOR	
Q531			2SC2714(Y)	TRANSISTOR	
Q532			2SC2954	TRANSISTOR	
Q533			DTA124EK	DIGITAL TRANSISTOR	
Q534-536			2SC3722K(R)	TRANSISTOR	
Q537			2SD1757K	TRANSISTOR	
Q539			2SC2714(Y)	TRANSISTOR	
Q800			2SC2714(Y)	TRANSISTOR	
TH1			157-101-53019	THERMISTOR 100	
TH2			157-302-53008	THERMISTOR 3K	
TH3			157-101-53019	THERMISTOR 100	
TH4			157-302-53008	THERMISTOR 3K	
S901,902			W02-1687-15	ENCODER (FILTER)	
S903		*	W02-1861-05	ENCODER (RIT/XIT)	
S904			W02-1660-15	ENCODER (M.CH/VFO.CH)	
A501	2F		X58-3390-03	SUB UNIT (VCO2)	

FINAL UNIT (X45-351X-XX) 0-00 : K,P,M,M2,X 2-71 : E,E2,E3,E9

C1			CK73FF1H473Z	CHIP C	0.047UF	Z
C2			CC73FCH1H101J	CHIP C	100PF	J
C3			CC45FCH2H030C	CERAMIC	3.0PF	C
C4			CC73FCH1H560J	CHIP C	56PF	J
C5			CK73FF1H473Z	CHIP C	0.047UF	Z
C6			CE04EW1H010M	ELECTRO	1.0UF	50WV
C7			CK73FB1H103K	CHIP C	0.010UF	K
C8-18			CK73FB1H102K	CHIP C	1000PF	K
C19-33			CK73FB1H103K	CHIP C	0.010UF	K
C101			CM93D2H102J	MICA	1000PF	J
C102			CC45FSL2H331J	CERAMIC	330PF	J
C103			CC45FSL2H271J	CERAMIC	270PF	J
C104,105			CM93D2H102J	MICA	1000PF	J
C106			CC45FSL2H151J	CERAMIC	150PF	J
C107			CM93D2H222J	MICA	2200PF	J
C108		*	CC45FSL2H181J	CERAMIC	180PF	J
C109			CC45FSL2H101J	CERAMIC	100PF	J
C110			CM93D2H102J	MICA	1000PF	J
C111			CM93D2H561J	MICA	560PF	J
C112			CC45FSL2H471J	CERAMIC	470PF	J
C113,114		*	CC45FSL2H181J	CERAMIC	180PF	J
C115			CC45FSL2H391J	CERAMIC	390PF	J
C116			CC45FSL2H471J	CERAMIC	470PF	J

PARTS LSIT

FINAL UNIT (X45-351X-XX)

Ref. No.	Address	New parts	Parts No.	Description			Destination
C117			CC45FSL2H271J	CERAMIC	270PF	J	
C118			CC45FSL2H391J	CERAMIC	390PF	J	
C119			CC45FSL2H471J	CERAMIC	470PF	J	
C120		*	CC45FSL2H181J	CERAMIC	180PF	J	
C121			CC45FSL2H331J	CERAMIC	330PF	J	
C122			CC45FSL2H820J	CERAMIC	82PF	J	
C123			CC45FSL2H331J	CERAMIC	330PF	J	
C124			CC45FSL2H121J	CERAMIC	120PF	J	
C125			CC45FSL2H270J	CERAMIC	27PF	J	
C126			CC45FSL2H151J	CERAMIC	150PF	J	
C127			CC45FSL2H471J	CERAMIC	470PF	J	
C128			CC45FSL2H270J	CERAMIC	27PF	J	
C129			CC45FSL2H220J	CERAMIC	22PF	J	
C130			CC45FSL2H331J	CERAMIC	330PF	J	
C131			CC45FSL2H471J	CERAMIC	470PF	J	
C132			CC45FSL2H680J	CERAMIC	68PF	J	
C133			CC45FSL2H560J	CERAMIC	56PF	J	
C134			CC45FSL2H151J	CERAMIC	150PF	J	
C135			CC45FSL2H471J	CERAMIC	470PF	J	
C136			CC45FSL2H560J	CERAMIC	56PF	J	
C137			CC45FSL2H151J	CERAMIC	150PF	J	
C138			CC45FSL2H331J	CERAMIC	330PF	J	
C139			CC45FSL2H330J	CERAMIC	33PF	J	
C140,141			CC45FSL2H221J	CERAMIC	220PF	J	
C142			CC45FSL2H101J	CERAMIC	100PF	J	
C143,144			CC45FSL2H151J	CERAMIC	150PF	J	
C145			CC45FSL2H120J	CERAMIC	12PF	J	
C146			CC45FSL2H271J	CERAMIC	270PF	J	
C147			CC45FSL2H390J	CERAMIC	39PF	J	
C148,149			CC45FSL2H820J	CERAMIC	82PF	J	
C150			CC45FSL2H100D	CERAMIC	10PF	D	
C151			CC45FSL2H121J	CERAMIC	120PF	J	
C152			CC45FSL2H470J	CERAMIC	47PF	J	
C153			CC45FSL2H330J	CERAMIC	33PF	J	
C154			CC45FSL2H820J	CERAMIC	82PF	J	
C161			CC45FSL2H100D	CERAMIC	10PF	D	
C162		*	CC45FSL2H090D	CERAMIC	9.0PF	D	
C163			CC45FSL2H270J	CERAMIC	27PF	J	
C301,302			CK73FB1H103K	CHIP C	0.010UF	K	
C304			CC73FCH1H101J	CHIP C	100PF	J	
C305			CC73FCH1H181J	CHIP C	180PF	J	
C306			CC73FCH1H390J	CHIP C	39PF	J	
C401			CE04EW1C470M	ELECTRO	47UF	16WV	
C402			CE04EW1C100M	ELECTRO	10UF	16WV	
C405			CE04EW1E470M	ELECTRO	47UF	25WV	
C406,407			CK73FB1E104K	CHIP C	0.10UF	K	
C408			CE04EW1E470M	ELECTRO	47UF	25WV	
C409			CK73FB1E104K	CHIP C	0.10UF	K	
C410			CE04EW1C470M	ELECTRO	47UF	16WV	
C411			CK73FB1H103K	CHIP C	0.010UF	K	
C412,413			CK73FB1H222K	CHIP C	2200PF	K	
C414			CE04EW1C330M	ELECTRO	33UF	16WV	
C415,416			CE04EW1C101M	ELECTRO	100UF	16WV	
C417			CK73FB1H103K	CHIP C	0.010UF	K	
C418-420			CK73FB1H102K	CHIP C	1000PF	K	
C421			CK73FB1H103K	CHIP C	0.010UF	K	
C422			CE04EW1E470M	ELECTRO	47UF	25WV	
C431-433			CK73FB1H103K	CHIP C	0.010UF	K	
C435			CK73FB1E104K	CHIP C	0.10UF	K	

Ref. No.	Address	New parts	Parts No.	Description			Destination
C436			CK73FB1H102K	CHIP C	1000PF	K	
C437			CK73FB1H103K	CHIP C	0.010UF	K	
C438			CE04EW1H010M	ELECTRO	1.0UF	50WV	
C439			CK73FB1H103K	CHIP C	0.010UF	K	
C450			CK73FB1H103K	CHIP C	0.010UF	K	
C452-454			CK73FB1H103K	CHIP C	0.010UF	K	
C455			CK73FB1H102K	CHIP C	1000PF	K	
C456-458			CK73FB1H103K	CHIP C	0.010UF	K	
C461			CC73FSL1H221J	CHIP C	220PF	J	
C465			CK73FB1E104K	CHIP C	0.10UF	K	
C466-471			CK73FF1C105Z	CHIP C	1.0UF	Z	
C472,473			CK73FB1E104K	CHIP C	0.10UF	K	
C479			CE04EW1H010M	ELECTRO	1.0UF	50WV	
C480-485			CK73FB1H103K	CHIP C	0.010UF	K	
C486-488			CK73FB1E104K	CHIP C	0.10UF	K	
C489			CC73FCH1H470J	CHIP C	47PF	J	
C490,491			CK73FB1H103K	CHIP C	0.010UF	K	
C492			CK73FB1E104K	CHIP C	0.10UF	K	
C493			CK73FB1H103K	CHIP C	0.010UF	K	
C494-496			CK73FB1E104K	CHIP C	0.10UF	K	
C497-499			CK73FB1H103K	CHIP C	0.010UF	K	
C502			CK73FB1E473K	CHIP C	0.047UF	K	
C503			CK73FB1H102K	CHIP C	1000PF	K	
C504,505			CK73FB1E473K	CHIP C	0.047UF	K	
C506			CK73FB1E223K	CHIP C	0.022UF	K	
C507			CK73FB1H681K	CHIP C	680PF	K	
C508,509			CK73FB1E473K	CHIP C	0.047UF	K	
C510,511			CK73FB1E223K	CHIP C	0.022UF	K	
C512			CE04EW1C100M	ELECTRO	10UF	16WV	
C513			CC45FSL2H151J	CERAMIC	150PF	J	
C514,515			CK73FB1E223K	CHIP C	0.022UF	K	
C516			CE04EW1E101M	ELECTRO	100UF	25WV	
C517			CM93D2H681J	MICA	680PF	J	
C518,519			C91-1004-05	CHIP C	6800PF	J	
C520			CK73FB1H102K	CHIP C	1000PF	K	
C521			CK73FB1E473K	CHIP C	0.047UF	K	
C522			CE04EW1C100M	ELECTRO	10UF	16WV	
C523			CK73FB1E223K	CHIP C	0.022UF	K	
C524			CE04EW1E470M	ELECTRO	47UF	25WV	
C525			CM73F2H122J	CHIP C	1200PF	J	
C526			CC45FSL2H151J	CERAMIC	150PF	J	
C527			CE04EW1E101M	ELECTRO	100UF	25WV	
C528,529			CK73FB1E104K	CHIP C	0.10UF	K	
C533			CM73F2H561J	CHIP C	560PF	J	
C550			CK73FB1E104K	CHIP C	0.10UF	K	
C551			CK73FB1H103K	CHIP C	0.010UF	K	
C552,553			CK73FB1H102K	CHIP C	1000PF	K	
C554			CK73FB1H223K	CHIP C	0.022UF	K	
C557			CK73FB1H102K	CHIP C	1000PF	K	
C558			CK73FB1H103K	CHIP C	0.010UF	K	
C559			CK73FB1E104K	CHIP C	0.10UF	K	
C560-563		*	C91-1171-05	HV C	0.01UF	1KWV	
C601			CK73FB1H103K	CHIP C	0.010UF	K	
C602			CE04EW1E102M	ELECTRO	1000UF	25WV	
C603			CK73FB1H103K	CHIP C	0.010UF	K	
C605,606			CK73FB1H103K	CHIP C	0.010UF	K	
C608,609			CK73FB1E104K	CHIP C	0.10UF	K	
C610,611			CK73FB1E473K	CHIP C	0.047UF	K	
C612,613			CE04EW1E470M	ELECTRO	47UF	25WV	

PARTS LIST

FINAL UNIT (X45-351X-XX)

Ref. No.	Address	New parts	Parts No.	Description	Destination
C614			CE04EW1E102M	ELECTRO 1000UF 25WV	
C620			CK73FF1E104Z	CHIP C 0.10UF Z	
C621,622			CE04EW1E470M	ELECTRO 47UF 25WV	
C623			CK73FF1E104Z	CHIP C 0.10UF Z	
C701-711			CK73FB1H103K	CHIP C 0.010UF K	
C712			CE04EW1C471M	ELECTRO 470UF 16WV	
C713			CK73FB1E103K	CHIP C 0.010UF K	
C901			CK73FB1H103K	CHIP C 0.010UF K	
C903			CE04EW1H2R2M	ELECTRO 2.2UF 50WV	
TC1			C05-0030-15	TRIMMER CAPACITOR 20PF	
CN1,2			E04-0191-05	RF COAXIAL CABLE SOCKET	
CN3			E40-5469-05	FLAT CABLE CONNECTOR (12P)	
CN4			E40-5068-05	PIN CONNECTOR (11P)	
CN5			E23-0996-05	TERMINAL (TEST)	
CN301			E40-3238-05	PIN CONNECTOR (3P)	
CN302-305			E04-0191-05	RF COAXIAL CABLE SOCKET	
CN306,307			E23-0996-05	TERMINAL (TEST)	
CN401			E23-5745-05	FLAT CABLE CONNECTOR (20P)	
CN402			E40-5469-05	FLAT CABLE CONNECTOR (12P)	
CN403			E40-3242-05	PIN CONNECTOR (7P)	
CN404			E40-3237-05	PIN CONNECTOR (2P)	
CN405			E40-3239-05	PIN CONNECTOR (4P)	
CN406			E40-5470-05	FLAT CABLE CONNECTOR (13P)	
CN407			E40-3240-05	PIN CONNECTOR (5P)	
CN410			E04-0154-05	RF COAXIAL CABLE SOCKET	
CN411			E40-3239-05	PIN CONNECTOR (4P)	
CN412			E04-0154-05	RF COAXIAL CABLE SOCKET	
CN413			E40-3238-05	PIN CONNECTOR (3P)	
CN501,502			E04-0191-05	RF COAXIAL CABLE SOCKET	
CN503			E40-3240-05	PIN CONNECTOR (5P)	
CN504			E40-3238-05	PIN CONNECTOR (3P)	
CN505-507			E23-0996-05	TERMINAL (TEST)	
CN601			E40-3238-05	PIN CONNECTOR (3P)	
CN602			E40-3239-05	PIN CONNECTOR (4P)	
CN603			E40-5470-05	FLAT CABLE CONNECTOR (13P)	
CN604			E40-3240-05	PIN CONNECTOR (5P)	
CN605			E40-3237-05	PIN CONNECTOR (2P)	
W1	1J,2K	*	E37-0539-05	LEAD WIRE WITH CONNECTOR	
W501	1J,2J	*	E37-0525-05	LEAD WIRE WITH TERMINALR	
W502	2J		E37-0067-05	LEAD WIRE WITH MINIPIN PLUG	
202	2G		F29-0014-05	INSULATING BUSH	
F401			F06-4029-05	FUSE (4A 250V) : C/5	
F601			F53-0093-05	FUSE (5A 125V) : D/5	
A401,402			J13-0075-05	FUSE CLIP : C/5	
CF451			L72-0319-05	CERAMIC FILTER (455KHZ)	
CF452			L72-0333-05	CERAMIC FILTER (455KHZ)	
CF453			L72-0366-05	CERAMIC FILTER (455KHZ)	
L1			L40-2221-33	SMALL FIXED INDUCTOR	
L2			L39-0480-15	TROIDAL COIL	
L3			L40-2221-33	SMALL FIXED INDUCTOR	
L4-10			L40-1015-48	SMALL FIXED INDUCTOR (100UH)	
L101			L39-0491-05	TROIDAL COIL (CORE : L92-0107-05)	
L102			L39-0492-05	TROIDAL COIL (CORE : L92-0107-05)	
L103			L39-0493-05	TROIDAL COIL (CORE : L92-0107-05)	
L104			L39-1223-05	TROIDAL COIL (CORE : L92-0107-05)	
L105			L39-1224-05	TROIDAL COIL (CORE : L92-0107-05)	
L106			L39-1225-05	TROIDAL COIL (CORE : L92-0107-05)	
L107			L39-1222-05	TROIDAL COIL (CORE : L92-0107-05)	

Ref. No.	Address	New parts	Parts No.	Description	Destination
L108			L39-1223-05	TROIDAL COIL (CORE : L92-0107-05)	
L109,110			L39-1221-05	TROIDAL COIL (CORE : L92-0108-05)	
L111			L34-1279-05	COIL	
L112			L34-1281-05	COIL	
L113			L34-1279-05	COIL	
L114			L34-1280-05	COIL	
L115			L34-1281-05	COIL	
L116			L34-1282-05	COIL	
L301,302			L40-1015-48	SMALL FIXED INDUCTOR (100UH)	
L303,304			L34-1035-05	COIL	
L401			L40-1015-48	SMALL FIXED INDUCTOR (100UH)	
L450			L40-2215-48	SMALL FIXED INDUCTOR (220UH)	
L451			L34-0943-05	COIL	
L452			L34-4255-05	COIL	
L453		*	L40-4711-15	SMALL FIXED INDUCTOR	
L454			L40-2221-33	SMALL FIXED INDUCTOR	
L455,456			L34-4254-05	COIL	
L457,458			L34-4255-05	COIL	
L460			L40-3395-48	SMALL FIXED INDUCTOR (3.3UH)	
L461-465			L40-1092-12	SMALL FIXED INDUCTOR	
L466			L40-1592-15	SMALL FIXED INDUCTOR	
L501		*	L40-1505-48	SMALL FIXED INDUCTOR (15UH)	
L502			L40-3395-48	SMALL FIXED INDUCTOR (3.3UH)	
L503			L39-0481-05	TROIDAL COIL	
L504			L33-0617-15	CHOKE COIL	
L505,506			L33-0699-05	CHOKE COIL	
L507			L39-1257-05	TROIDAL COIL	
L508,509			L33-0617-15	CHOKE COIL	
L510			L39-0482-05	TROIDAL COIL	
L511			L33-0651-05	CHOKE COIL	
L512			L33-0617-15	CHOKE COIL	
L513			L39-1209-25	TROIDAL COIL	
L514		*	L40-1505-48	SMALL FIXED INDUCTOR (15UH)	
L515,516		*	L92-0150-05	TROIDAL CORE (W501)	
L520			L40-3985-48	SMALL FIXED INDUCTOR (390NH)	
L601			L40-1005-48	SMALL FIXED INDUCTOR (10UH)	
L602			L40-1092-12	SMALL FIXED INDUCTOR	
R	2G,2H		N67-3010-46	PAN HEAD SEMS SCREW	
K	2G,2H		N87-3006-46	BRAZIER HEAD TAPTITE SCREW	
R1			RK73FB2A100J	CHIP R 10 J 1/10W	
R2-5			RK73FB2A330J	CHIP R 33 J 1/10W	
R6-9			RK73FB2A270J	CHIP R 27 J 1/10W	
R10			RK73FB2A181J	CHIP R 180 J 1/10W	
R11-13			RK73FB2A101J	CHIP R 100 J 1/10W	
R14			RK73FB2A473J	CHIP R 47K J 1/10W	
R15			RK73FB2A103J	CHIP R 10K J 1/10W	
R20			RK73FB2A393J	CHIP R 39K J 1/10W	
R21			RK73FB2A223J	CHIP R 22K J 1/10W	
R22			RK73FB2A104J	CHIP R 100K J 1/10W	
R301-304			RK73FB2A104J	CHIP R 100K J 1/10W	
R305			RK73FB2A473J	CHIP R 47K J 1/10W	
R401			RK73FB2A100J	CHIP R 10 J 1/10W	
R402			RK73FB2A272J	CHIP R 2.7K J 1/10W	
R403,404			RK73FB2A273J	CHIP R 27K J 1/10W	
R405			RK73FB2A473J	CHIP R 47K J 1/10W	
R406			RK73FB2A150J	CHIP R 15 J 1/10W	
R407			RK73FB2A221J	CHIP R 220 J 1/10W	
R408			RK73FB2A101J	CHIP R 100 J 1/10W	

PARTS LSIT

FINAL UNIT (X45-351X-XX)

Ref. No.	Address	New parts	Parts No.	Description	Destination
R409,410			R92-1332-05	CHIP R 160 J 1W	
R411			RK73FB2A182J	CHIP R 1.8K J 1/10W	
R415			RK73FB2A101J	CHIP R 100 J 1/10W	
R416			RK73FB2A220J	CHIP R 22 J 1/10W	
R417			RK73FB2A101J	CHIP R 100 J 1/10W	
R418			RK73FB2A102J	CHIP R 1.0K J 1/10W	
R419			RK73FB2A104J	CHIP R 100K J 1/10W	
R420			RK73FB2A102J	CHIP R 1.0K J 1/10W	
R421			RK73FB2A393J	CHIP R 39K J 1/10W	
R422			RK73FB2A220J	CHIP R 22 J 1/10W	
R423,424			RK73FB2A331J	CHIP R 330 J 1/10W	
R425			RK73FB2A220J	CHIP R 22 J 1/10W	
R426			RK73FB2A103J	CHIP R 10K J 1/10W	
R427			RK73FB2A102J	CHIP R 1.0K J 1/10W	
R428			RK73FB2A222J	CHIP R 2.2K J 1/10W	
R429			RK73FB2A102J	CHIP R 1.0K J 1/10W	
R439			RK73FB2A470J	CHIP R 47 J 1/10W	
R440			RK73FB2A152J	CHIP R 1.5K J 1/10W	
R441,442			RK73FB2A332J	CHIP R 3.3K J 1/10W	
R443,444			RK73FB2A101J	CHIP R 100 J 1/10W	
R445,446			RK73FB2A472J	CHIP R 4.7K J 1/10W	
R447,448			RK73FB2A101J	CHIP R 100 J 1/10W	
R449,450			RK73FB2A222J	CHIP R 2.2K J 1/10W	
R451,452			RK73FB2A101J	CHIP R 100 J 1/10W	
R453			RK73FB2A152J	CHIP R 1.5K J 1/10W	
R454,455			RK73FB2A332J	CHIP R 3.3K J 1/10W	
R456			RK73FB2A333J	CHIP R 33K J 1/10W	
R457,458			RK73FB2A104J	CHIP R 100K J 1/10W	
R459			RK73FB2A471J	CHIP R 470 J 1/10W	
R460			RK73FB2A220J	CHIP R 22 J 1/10W	
R461			RK73FB2A102J	CHIP R 1.0K J 1/10W	
R462			RK73FB2A101J	CHIP R 100 J 1/10W	
R463,464			RK73FB2A151J	CHIP R 150 J 1/10W	
R465,466			RK73FB2A471J	CHIP R 470 J 1/10W	
R467-470			RK73FB2A330J	CHIP R 33 J 1/10W	
R471			RK73FB2A102J	CHIP R 1.0K J 1/10W	
R472			RK73FB2A104J	CHIP R 100K J 1/10W	
R473			RK73FB2A473J	CHIP R 47K J 1/10W	
R474			RK73FB2A104J	CHIP R 100K J 1/10W	
R475			RK73FB2A473J	CHIP R 47K J 1/10W	
R476			RK73FB2A472J	CHIP R 4.7K J 1/10W	
R480			RK73FB2A470J	CHIP R 47 J 1/10W	
R481			RK73FB2A471J	CHIP R 470 J 1/10W	
R482			RK73FB2A330J	CHIP R 33 J 1/10W	
R483			RK73FB2A221J	CHIP R 220 J 1/10W	
R484			RK73FB2A223J	CHIP R 22K J 1/10W	
R485			RK73FB2A822J	CHIP R 8.2K J 1/10W	
R486			RK73FB2A560J	CHIP R 56 J 1/10W	
R487-489			RK73FB2A223J	CHIP R 22K J 1/10W	
R490			RK73FB2A681J	CHIP R 680 J 1/10W	
R491,492			RK73FB2A471J	CHIP R 470 J 1/10W	
R501			RK73FB2A101J	CHIP R 100 J 1/10W	
R502			RK73FB2A331J	CHIP R 330 J 1/10W	
R503			RK73FB2A681J	CHIP R 680 J 1/10W	
R504			RK73FB2A331J	CHIP R 330 J 1/10W	
R505,506			RK73FB2A6R8J	CHIP R 6.8 J 1/10W	
R507			RK73FB2A681J	CHIP R 680 J 1/10W	
R508,509			R92-0696-05	CHIP R 33 J 1/4W	
R510			RK73FB2A331J	CHIP R 330 J 1/10W	

Ref. No.	Address	New parts	Parts No.	Description	Destination
R511			RK73FB2A151J	CHIP R 150 J 1/10W	
R512,513			R92-1318-05	CHIP R 100 J 1W	
R514-517			RS14DB3A5R6J	FL-PROOF RS 5.6 J 1W	
R518,519			RS14DB3A150J	FL-PROOF RS 15 J 1W	
R520			RK73FB2A561J	CHIP R 560 J 1/10W	
R521,522			RS14DB3A5R6J	FL-PROOF RS 5.6 J 1W	
R530		*	R92-2543-05	FIXED RESISTOR 6.8 1/2W	
R601			RK73FB2A472J	CHIP R 4.7K J 1/10W	
R701			RK73FB2A103J	CHIP R 10K J 1/10W	
R702			RK73FB2A101J	CHIP R 100 J 1/10W	
R703-705			RK73FB2A562J	CHIP R 5.6K J 1/10W	
R706			RK73FB2A472J	CHIP R 4.7K J 1/10W	
R707			RK73FB2A821J	CHIP R 820 J 1/10W	
R708			RK73FB2A272J	CHIP R 2.7K J 1/10W	
R709			RK73FB2A333J	CHIP R 33K J 1/10W	
R710			R92-1282-05	CHIP R 10 J 1W	
R712			R92-1316-05	CHIP R 39 J 1W	
R713			RK73FB2A471J	CHIP R 470 J 1/10W	
R714			RK73FB2A153J	CHIP R 15K J 1/10W	
VR1			R12-6730-05	TRIMMING POT. 220	
VR501,502			R12-6734-05	TRIMMING POT. 1K	
W301			R92-0150-05	JUMPER REST 0 OHM (ANT1)	
W303			R92-0150-05	JUMPER REST 0 OHM (ANT2)	
K1-14			S51-1420-05	RELAY	
K301			S51-2417-05	RELAY	
K302			S51-1429-05	RELAY	
K601			S51-2423-05	RELAY	
D1,2			1SS101	DIODE	
D3			RLZJ5.1B	ZENER DIODE	
D4-10			LFB01	DIODE	
D11			DAP202K	DIODE	
D301,302			DSA301LA	DIODE	
D303,304			LFB01	DIODE	
D401			1SS226	DIODE	
D402		*	RD9.1M(B2)	ZENER DIODE	
D450			DAN235K	DIODE	
D451-456			1SV128	DIODE	
D457			DAN235K	DIODE	
D501			MA27T-B	DIODE	
D502,503			SV03YS	DIODE	
D504			SG-5L(R)	DIODE	
D601			LFB01	DIODE	
D701			DAN202K	DIODE	
D702			LFB01	DIODE	
IC1			TC9174F	IC (CMOS I/O EXTENSION)	
IC402			UPC7805H	IC (VOLTAGE REGULATOR/ +5V)	
IC601,602			UPC7808H	IC (VOLTAGE REGULATOR/ +8V)	
IC701			NJM2904M	IC (OP AMP X2)	
Q1-4			FMA7	TRANSISTOR	
Q5			DTC114EK	DIGITAL TRANSISTOR	
Q6			FMC2	TRANSISTOR	
Q10-16			DTB143EK	DIGITAL TRANSISTOR	
Q401			2SA1162(Y)	TRANSISTOR	
Q402,403			2SC2712(Y)	TRANSISTOR	
Q404			2SD1624(S)	TRANSISTOR	
Q405			2SD1406(Y)	TRANSISTOR	
Q460,461			3SK131(M)	FET	
Q470,471			3SK131(M)	FET	

PARTS LIST

FINAL UNIT (X45-351X-XX)
AT UNIT (X53-3340-02)

Ref. No.	Address	New parts	Parts No.	Description	Destination
Q472			2SC2712(Y)	TRANSISTOR	
Q475			3SK131(M)	FET	
Q501			2SC1971	TRANSISTOR	
Q502,503			2SC3133	TRANSISTOR	
Q504			2SD1406(Y)	TRANSISTOR	
Q505,506			2SC2879	TRANSISTOR	
Q507			2SD1406(Y)	TRANSISTOR	
Q601			DTC143TK	DIGITAL TRANSISTOR	
Q701			DTC114TK	DIGITAL TRANSISTOR	
Q702,703			DTD114EK	DIGITAL TRANSISTOR	
TH452			157-502-53002	THERMISTOR 5K	
TH701			5TP-41S	THERMISTOR	
AT UNIT (X53-3340-02)					
C1			CC45FSL2H330J	CERAMIC 33PF J	
C2-8			CK73FB1E103K	CHIP C 0.010UF K	
C9,10			CK73FB1H102K	CHIP C 1000PF K	
C11			CK73FB1E103K	CHIP C 0.010UF K	
C12			CE04EW1C470M	ELECTRO 47UF 16WV	
C13-15			CK73FB1E103K	CHIP C 0.010UF K	
C16			CK73EF1E474Z	CHIP C 0.47UF Z	
C17-19			CK73FB1E103K	CHIP C 0.010UF K	
C20			CE04EW1C101M	ELECTRO 100UF 16WV	
C21-23			CK73FB1E103K	CHIP C 0.010UF K	
C24			CK73EF1E474Z	CHIP C 0.47UF Z	
C25			CK73FB1E103K	CHIP C 0.010UF K	
C26			CE04EW1C101M	ELECTRO 100UF 16WV	
C27-37			CK73FB1E103K	CHIP C 0.010UF K	
C38			CK73FB1H103K	CHIP C 0.010UF K	
C101-103			CK73FB1H103K	CHIP C 0.010UF K	
C105-108			CK73FB1H103K	CHIP C 0.010UF K	
TC1			C05-0031-15	TRIMMER CAPACITOR 10PF	
VC1,2	2L		C02-0023-05	VARIABLE CAPACITOR 300PF	
A5	3L		D40-0633-15	GEAR ASSY	
CN1,2			E04-0157-05	RF COAXIAL CABLE SOCKET	
CN3			E40-3239-05	PIN CONNECTOR (4P)	
CN4			E40-3240-05	PIN CONNECTOR (5P)	
CN5			E40-3238-05	PIN CONNECTOR (3P)	
CN6			E40-3237-05	PIN CONNECTOR (2P)	
CN7			E40-5068-05	PIN CONNECTOR (11P)	
CN101			E40-5066-05	PIN CONNECTOR (9P)	
–			F20-1081-04	INSULATING SHEET	
A1	2M		F11-1142-22	SHIELDING CASE	
A2	2M		F10-1401-23	SHIELDING PLATE	
A3	1M		F11-1143-14	SHIELDING COVER	
A4	2M		F11-1144-14	SHIELDING COVER	
A6	1M	*	F10-2192-04	SHIELDING COVER	
–			J61-0307-05	BAND	
L1			L39-0496-05	COIL	
L2			L39-0415-25	COIL	
L3-6			L40-1011-13	SMALL FIXED INDUCTOR	
L7-11			L40-1011-14	SMALL FIXED INDUCTOR	
L12-14			L40-1011-13	SMALL FIXED INDUCTOR	
L101-103			L40-1011-14	SMALL FIXED INDUCTOR	

Ref. No.	Address	New parts	Parts No.	Description	Destination
L105-108			L40-1011-14	SMALL FIXED INDUCTOR	
L109			L34-1276-15	COIL	
L110			L39-0479-05	COIL	
L111			L39-0495-05	COIL	
L112			L39-0494-15	COIL	
T110-112			L92-0117-05	TROIDAL CORE	
K	1M,2M		N87-3006-46	BRAZIER HEAD TAPTITE SCREW	
S	1M,2M		N88-3006-46	FLAT HEAD TAPTITE SCREW	
R1,2			RD14BB2E101J	RD 100 J 1/4W	
R3			RK73FB2A102J	CHIP R 1.0K J 1/10W	
R4			RD14BB2E560J	RD 56 J 1/4W	
R5,6			RK73FB2A181J	CHIP R 180 J 1/10W	
R7-10			RK73FB2A103J	CHIP R 10K J 1/10W	
R11			RK73FB2A563J	CHIP R 56K J 1/10W	
R12			RK73FB2A121J	CHIP R 120 J 1/10W	
R13			RK73FB2A101J	CHIP R 100 J 1/10W	
R14			RK73FB2A563J	CHIP R 56K J 1/10W	
R15			RK73FB2A121J	CHIP R 120 J 1/10W	
R16			RK73FB2A101J	CHIP R 100 J 1/10W	
R17			RK73FB2A330J	CHIP R 33 J 1/10W	
R18			RK73FB2A103J	CHIP R 10K J 1/10W	
R19			RK73FB2A330J	CHIP R 33 J 1/10W	
R20-23			RK73FB2A103J	CHIP R 10K J 1/10W	
R24,25			RD14BB2E100J	RD 10 J 1/4W	
R26-30			RK73FB2A103J	CHIP R 10K J 1/10W	
R31			RK73FB2A472J	CHIP R 4.7K J 1/10W	
R32			RK73FB2A103J	CHIP R 10K J 1/10W	
R33			RD14BB2E101J	RD 100 J 1/4W	
R34			RK73FB2A472J	CHIP R 4.7K J 1/10W	
VR101,102	3L		R01-3435-05	POTENTIOMETER 10K	
W12-17			R92-0679-05	CHIP R 0 OHM	
W18-28			R92-0670-05	CHIP R 0 OHM	
W29-31			R92-0679-05	CHIP R 0 OHM	
W32			R92-0670-05	CHIP R 0 OHM	
W34			R92-0670-05	CHIP R 0 OHM	
W35,36			R92-0679-05	CHIP R 0 OHM	
W37			R92-0670-05	CHIP R 0 OHM	
W40	2B	*	E33-1984-05	PROCESSED WIRE KIT (to FIL:CN4)	
W40	2B	*	E33-1984-05	PROCESSED WIRE KIT (to CONT:CN4)	
W40	2B	*	E33-1984-05	PROCESSED WIRE KIT (to RL:AT1)	
W40	2B	*	E33-1984-05	PROCESSED WIRE KIT (to RL:AT2)	
K1			S51-2407-05	RELAY	
K101-103			S76-0401-05	RELAY	
K105-108			S76-0401-05	RELAY	
M1,2	3L		T42-0453-05	DC MOTOR	
D1,2			1SS101	DIODE	
D3-8			1SS226	DIODE	
D10			1S1555	DIODE	
D101-103			1S1555	DIODE	
D105-108			1S1555	DIODE	
D109,110			RLS73	DIODE	
IC1			SN74S74N	IC (ONE SHOT MULTI)	
IC2,3			TC4066BP	IC (ANALOG/ DIGITAL SW)	
IC4,5			BA6109U2	IC (MOTOR DRIVER)	
IC6			NJM2903S	IC (DUAL COMPALATOR)	
IC7			MC78L05M	IC (VOLTAGE REGULATOR/ +5V)	

PARTS LSIT

AT UNIT (X53-3340-02)
CONTROL UNIT (X53-356X-XX)

Ref. No.	Address	New parts	Parts No.	Description	Destination
Q1,2			2SC2714(Y)	TRANSISTOR	
Q3			DTC114EK	DIGITAL TRANSISTOR	
Q4			2SA1204(Y)	TRANSISTOR	
Q5			DTC114EK	DIGITAL TRANSISTOR	
CONTROL UNIT (X53-356X-XX) 0-11 : K,P 0-21 : M 0-22 : M2 0-71 : X 2-71 : E 2-72 : E2 2-73 : E3 2-74 : E9					
C1,2			CK73GB1H102K	CHIP C 1000PF K	
C3			C92-0044-05	CHIP-ELE 47UF 10WV	
C4			CK73GB1H102K	CHIP C 1000PF K	
C5			C92-0032-05	CHIP-ELE 4.7UF 25WV	
C6,7			CK73GF1E104Z	CHIP C 0.10UF Z	
C8			C92-0037-05	CHIP-ELE 10UF 16WV	
C9			C92-0032-05	CHIP-ELE 4.7UF 25WV	
C10,11			CK73GF1E104Z	CHIP C 0.10UF Z	
C12			C92-0037-05	CHIP-ELE 10UF 16WV	
C13			C92-0032-05	CHIP-ELE 4.7UF 25WV	
C14,15			CK73GF1E104Z	CHIP C 0.10UF Z	
C16			C92-0037-05	CHIP-ELE 10UF 16WV	
C17-41			CK73GB1H102K	CHIP C 1000PF K	
C42			CK73GB1H103K	CHIP C 0.010UF K	
C43,44			CK73GB1H102K	CHIP C 1000PF K	
C45			C92-0044-05	CHIP-ELE 47UF 10WV	
C46,47			CK73GB1H103K	CHIP C 0.010UF K	
C48,49			CC73GCH1H330J	CHIP C 33PF J	
C50-54			CK73GB1H103K	CHIP C 0.010UF K	
C55			C92-0044-05	CHIP-ELE 47UF 10WV	
C56,57			CK73GF1E104Z	CHIP C 0.10UF Z	
C58			CK73GB1H103K	CHIP C 0.010UF K	
C59			C92-0044-05	CHIP-ELE 47UF 10WV	
C60			CK73GB1H103K	CHIP C 0.010UF K	
C61			C92-0044-05	CHIP-ELE 47UF 10WV	
C62-77			CC73GCH1H101J	CHIP C 100PF J	
C78-80			CK73GB1H103K	CHIP C 0.010UF K	
C81-88			CC73GCH1H101J	CHIP C 100PF J	
C89-93			CK73GB1H103K	CHIP C 0.010UF K	
C94-96			C92-0037-05	CHIP-ELE 10UF 16WV	
C97			C92-0044-05	CHIP-ELE 47UF 10WV	
C98-102			CK73GB1H103K	CHIP C 0.010UF K	
C103,104			CC73GCH1H220J	CHIP C 22PF J	
C105-107			CK73GB1H103K	CHIP C 0.010UF K	
C108			C92-0044-05	CHIP-ELE 47UF 10WV	
C109,110			CK73GB1H103K	CHIP C 0.010UF K	
C111-113			C92-0023-05	CHIP-ELE 1.0UF 50WV	
C114			CK73GB1H103K	CHIP C 0.010UF K	
C115			C92-0023-05	CHIP-ELE 1.0UF 50WV	
C116,117			CK73GB1H103K	CHIP C 0.010UF K	
C118-124			CK73GB1H102K	CHIP C 1000PF K	
C125,126			CK73GB1H103K	CHIP C 0.010UF K	
C127-141			CC73GCH1H101J	CHIP C 100PF J	
C142-147			CK73GB1H102K	CHIP C 1000PF K	
C148-150			CC73GCH1H101J	CHIP C 100PF J	
C152			CC73GCH1H101J	CHIP C 100PF J	
C153-175			CK73GB1H102K	CHIP C 1000PF K	
C177-183			CK73GB1H102K	CHIP C 1000PF K	
C184-187			CK73GB1H103K	CHIP C 0.010UF K	
C188-223			CK73GB1H102K	CHIP C 1000PF K	
C224,225			CC73GSL1H471J	CHIP C 470PF J	

Ref. No.	Address	New parts	Parts No.	Description	Destination
C226,227			CK73GB1H103K	CHIP C 0.010UF K	
C228,229			CK73GB1H102K	CHIP C 1000PF K	
C230			CK73GB1H103K	CHIP C 0.010UF K	
C231-233			CK73GB1H102K	CHIP C 1000PF K	
C501-509			CK73GB1H103K	CHIP C 0.010UF K	
C511-521			CK73GB1H103K	CHIP C 0.010UF K	
C522			CK73GB1H102K	CHIP C 1000PF K	
C523			CK73GF1E104Z	CHIP C 0.10UF Z	
C601-604			CK73GB1H103K	CHIP C 0.010UF K	
C605			CK73GF1E104Z	CHIP C 0.10UF Z	
C606			CK73GB1H102K	CHIP C 1000PF K	
401	1D		E23-0623-04	EARTH LUG	
CN1,2		*	E40-5744-05	FLAT CABLE CONNECTOR (20P)	
CN3			E40-3239-05	PIN CONNECTOR (4P)	
CN4		*	E40-5763-05	PIN CONNECTOR (12P)	
CN5		*	E40-5744-05	FLAT CABLE CONNECTOR (20P)	
CN6			E40-5761-05	FLAT CABLE CONNECTOR (26P)	
CN7		*	E40-5742-05	FLAT CABLE CONNECTOR (13P)	
CN8		*	E40-5739-05	FLAT CABLE CONNECTOR (10P)	
CN9,10		*	E40-5740-05	FLAT CABLE CONNECTOR (20P)	
CN11		*	E40-5744-05	FLAT CABLE CONNECTOR (20P)	
CN12			E02-2015-05	SOCKET FOR IC	
CN501		*	E40-5740-05	FLAT CABLE CONNECTOR (20P)	
CN601			E40-3251-05	PIN CONNECTOR (7P)	
J601			E06-0858-15	CYLINDRICAL RECEPTACLE (8P MIC)	
A1	3G	*	F01-1007-04	HEAT SINK	
402	3G		G02-0574-04	FLAT SPRING	
403	2A	*	J19-1570-05	HOLDER (BATT)	
L1-3			L40-4705-48	SMALL FIXED INDUCTOR (47UH)	
L4,5			L40-1292-18	SMALL FIXED INDUCTOR	
L6,7			L40-4705-48	SMALL FIXED INDUCTOR (47UH)	
L8			L40-1292-18	SMALL FIXED INDUCTOR	
L11-25			L40-4705-48	SMALL FIXED INDUCTOR (47UH)	
L26,27			L40-1005-48	SMALL FIXED INDUCTOR (10UH)	
L28			L40-4705-48	SMALL FIXED INDUCTOR (47UH)	
X1		*	L77-1589-05	CRYSTAL RESONATOR (11.0592MHZ)	
X2			L78-0325-05	RESONATOR (2.0MHZ)	
G	3G		N32-2606-46	FLAT HEAD MACHIN SCREW	
R1,2			RK73GB1J101J	CHIP R 100 J 1/16W	
R3,4			RK73GB1J102J	CHIP R 1.0K J 1/16W	
R5			RK73GB1J101J	CHIP R 100 J 1/16W	
R6			RK73GB1J473J	CHIP R 47K J 1/16W	
R7-9			RK73GB1J102J	CHIP R 1.0K J 1/16W	
R10-28			RK73GB1J101J	CHIP R 100 J 1/16W	
R29			RK73GB1J105J	CHIP R 1.0M J 1/16W	
R30-37			RK73GB1J101J	CHIP R 100 J 1/16W	
R39			RK73GB1J102J	CHIP R 1.0K J 1/16W	
R40			RK73GB1J471J	CHIP R 470 J 1/16W	
R41			RK73GB1J103J	CHIP R 10K J 1/16W	
R42			RK73GB1J222J	CHIP R 2.2K J 1/16W	
R43,44			RK73GB1J104J	CHIP R 100K J 1/16W	
R45			RK73GB1J472J	CHIP R 4.7K J 1/16W	
R46			RK73GB1J102J	CHIP R 1.0K J 1/16W	
R47			RK73GB1J473J	CHIP R 47K J 1/16W	
R48			RK73GB1J102J	CHIP R 1.0K J 1/16W	X

PARTS LIST

CONTROL UNIT (X53-356X-XX)

Ref. No.	Address	New parts	Parts No.	Description	Destination
R49			RK73GB1J473J	CHIP R 47K J 1/16W	
R51			RK73GB1J473J	CHIP R 47K J 1/16W	
R52			RK73GB1J103J	CHIP R 10K J 1/16W	
R53			RK73GB1J102J	CHIP R 1.0K J 1/16W	E3E9M
R54			RK73GB1J473J	CHIP R 47K J 1/16W	
R55,56			RK73GB1J103J	CHIP R 10K J 1/16W	
R57			RK73GB1J102J	CHIP R 1.0K J 1/16W	EE2E3E9
R58			RK73GB1J473J	CHIP R 47K J 1/16W	
R59-68			RK73GB1J103J	CHIP R 10K J 1/16W	
R69			RK73GB1J102J	CHIP R 1.0K J 1/16W	E2MM2
R70			RK73GB1J473J	CHIP R 47K J 1/16W	
R71,72			RK73GB1J103J	CHIP R 10K J 1/16W	
R73			RK73GB1J102J	CHIP R 1.0K J 1/16W	E
R74			RK73GB1J473J	CHIP R 47K J 1/16W	
R75-85			RK73GB1J103J	CHIP R 10K J 1/16W	
R86,87			RK73GB1J472J	CHIP R 4.7K J 1/16W	
R88			RK73GB1J153J	CHIP R 15K J 1/16W	
R89			RK73GB1J334J	CHIP R 330K J 1/16W	
R90-92			RK73GB1J153J	CHIP R 15K J 1/16W	
R93			RK73GB1J103J	CHIP R 10K J 1/16W	
R94,95			RK73GB1J153J	CHIP R 15K J 1/16W	
R96			RK73GB1J105J	CHIP R 1.0M J 1/16W	
R97			RK73GB1J102J	CHIP R 1.0K J 1/16W	
R98			RK73GB1J473J	CHIP R 47K J 1/16W	
R99			RK73GB1J102J	CHIP R 1.0K J 1/16W	
R100-105			RK73GB1J105J	CHIP R 1.0M J 1/16W	
R107			RK73GB1J105J	CHIP R 1.0M J 1/16W	
R108-119			RK73GB1J104J	CHIP R 100K J 1/16W	
R120-130			RK73GB1J101J	CHIP R 100 J 1/16W	
R131			RK73GB1J102J	CHIP R 1.0K J 1/16W	
R132,133			RK73GB1J103J	CHIP R 10K J 1/16W	
R134-137			RK73GB1J101J	CHIP R 100 J 1/16W	
R138-140			RK73GB1J101J	CHIP R 100 J 1/16W	
R141-144			RK73GB1J102J	CHIP R 1.0K J 1/16W	
R145			RK73GB1J223J	CHIP R 22K J 1/16W	
R146,147			RK73GB1J473J	CHIP R 47K J 1/16W	
R148-150			RK73GB1J101J	CHIP R 100 J 1/16W	
R152-169			RK73GB1J101J	CHIP R 100 J 1/16W	
R170			RK73GB1J474J	CHIP R 470K J 1/16W	
R171			RK73GB1J102J	CHIP R 1.0K J 1/16W	
R172-177			RK73GB1J101J	CHIP R 100 J 1/16W	
R179-201			RK73GB1J101J	CHIP R 100 J 1/16W	
R202			RK73GB1J473J	CHIP R 47K J 1/16W	
R203-214			RK73GB1J101J	CHIP R 100 J 1/16W	
R215			RK73GB1J473J	CHIP R 47K J 1/16W	
R216-222			RK73GB1J101J	CHIP R 100 J 1/16W	
R223			RK73GB1J333J	CHIP R 33K J 1/16W	
R224			RK73GB1J101J	CHIP R 100 J 1/16W	
R225			RK73GB1J473J	CHIP R 47K J 1/16W	
R226			RK73GB1J104J	CHIP R 100K J 1/16W	
R227-234			RK73GB1J103J	CHIP R 10K J 1/16W	
R235-237			RK73GB1J102J	CHIP R 1.0K J 1/16W	
R238-240			RK73GB1J101J	CHIP R 100 J 1/16W	
R241			RK73GB1J473J	CHIP R 47K J 1/16W	
R242,243			RK73GB1J102J	CHIP R 1.0K J 1/16W	
R244			RK73GB1J101J	CHIP R 100 J 1/16W	KPMXE
R244			RK73GB1J101J	CHIP R 100 J 1/16W	E2E3E9
R245			RK73GB1J473J	CHIP R 47K J 1/16W	
R501-504			RK73GB1J473J	CHIP R 47K J 1/16W	

Ref. No.	Address	New parts	Parts No.	Description	Destination
R505			RK73GB1J391J	CHIP R 390 J 1/16W	
R506			RK73GB1J271J	CHIP R 270 J 1/16W	
R507			RK73GB1J473J	CHIP R 47K J 1/16W	
R508			RK73GB1J391J	CHIP R 390 J 1/16W	
R509			RK73GB1J271J	CHIP R 270 J 1/16W	
R510			RK73GB1J391J	CHIP R 390 J 1/16W	
R511			RK73GB1J271J	CHIP R 270 J 1/16W	
R512			RK73GB1J391J	CHIP R 390 J 1/16W	
R513			RK73GB1J271J	CHIP R 270 J 1/16W	
R514			RK73GB1J473J	CHIP R 47K J 1/16W	
R515			RK73GB1J391J	CHIP R 390 J 1/16W	
R516			RK73GB1J271J	CHIP R 270 J 1/16W	
R517			RK73GB1J391J	CHIP R 390 J 1/16W	
R518			RK73GB1J271J	CHIP R 270 J 1/16W	
R519			RK73GB1J391J	CHIP R 390 J 1/16W	
R520			RK73GB1J271J	CHIP R 270 J 1/16W	
R521-523			RK73GB1J473J	CHIP R 47K J 1/16W	
R524			RK73GB1J102J	CHIP R 1.0K J 1/16W	
R525			RK73GB1J473J	CHIP R 47K J 1/16W	
R526-527			RK73GB1J101J	CHIP R 100 J 1/16W	
R528			RK73GB1J391J	CHIP R 390 J 1/16W	
R529			RK73GB1J271J	CHIP R 270 J 1/16W	
R530			RK73GB1J391J	CHIP R 390 J 1/16W	
R531			RK73GB1J271J	CHIP R 270 J 1/16W	
R532			RK73GB1J391J	CHIP R 390 J 1/16W	
R533			RK73GB1J271J	CHIP R 270 J 1/16W	
R534			RK73GB1J391J	CHIP R 390 J 1/16W	
R535			RK73GB1J271J	CHIP R 270 J 1/16W	
R536-539			RK73GB1J101J	CHIP R 100 J 1/16W	
R540			RK73GB1J473J	CHIP R 47K J 1/16W	
R541,542			RK73GB1J101J	CHIP R 100 J 1/16W	
R543-546			RK73GB1J473J	CHIP R 47K J 1/16W	
R547,548			RK73GB1J103J	CHIP R 10K J 1/16W	
R549-555			RK73GB1J473J	CHIP R 47K J 1/16W	
R556			RK73GB1J103J	CHIP R 10K J 1/16W	
S1			S62-0412-05	SLIDE SWITCH	
S501-545		*	S70-0439-05	TACT SWITCH	
S546-551		*	S70-0439-05	TACT SWITCH	
D1-3			1SS355	DIODE	
D4		*	RD7.5M(B3)	ZENER DIODE	
D5-12			1SS355	DIODE	
D501			B30-2036-05	LED (RED)	
D502		*	B30-2146-05	LED (ORANGE)	
D510-519		*	B30-2146-05	LED (ORANGE)	
IC1,2			UPC7805H	IC (VOLTAGE REGULATOR/ +5V)	
IC3			TA78L08F	IC (VOLTAGE REGULATOR)	
IC4			AT2402N10SI2.7	IC (2kbit SERIAL EEPROMM)	
IC5			MB3780A	IC (BATTERY BACKUP)	
IC6		*	M37702S4BFP	IC	
IC7			TC7S04F	IC (2CH NAND GATE)	
IC8			LC3564QMF-10	IC	
IC9			TC4052BF	IC (4CH MPX/DE-MPX)	
IC10			TC7S04F	IC (2CH NAND GATE)	
IC11		*	TC74VHC32F	IC	
IC12		*	27C512RJLVC	IC	
IC13			TC4052BF	IC (4CH MPX/DE-MPX)	
IC14		*	TC74VHC08F	IC	
IC15		*	TC74VHC245F	IC	

PARTS LSIT

CONTROL UNIT (X53-356X-XX)
TX-RX UNIT (X57-4620-00)

Ref. No.	Address	New parts	Parts No.	Description	Destination
IC16			CXD1095Q	IC (I/O EXPANDER)	
IC17,18		*	TC74VHC138F	IC	
IC19		*	TC74VHC573F	IC	
IC20,21			LZ92K371	IC (ENCODER PROCESSOR)	
IC22,23			CXD1095Q	IC (I/O EXPANDER)	
IC24		*	68HC05G2419553	IC	
IC25,26			TC4584BF	IC (BUFF)	
IC27		*	ADM232LAR	IC	
IC28			NJM2904M	IC (OP AMP X2)	
IC29			TC7S32F	IC (2CH NAND GATE)	
IC501-504			UPD6345GS	IC	
Q1			DTA143EK	DIGITAL TRANSISTOR	
Q2			DTC143EK	DIGITAL TRANSISTOR	
Q3,4			DTC114EK	DIGITAL TRANSISTOR	
Q5			DTC143EK	DIGITAL TRANSISTOR	
Q6-11			DTC114EK	DIGITAL TRANSISTOR	
Q12,13			DTA143EK	DIGITAL TRANSISTOR	
Q14-22			DTC143EK	DIGITAL TRANSISTOR	
Q23,24			DTA143EK	DIGITAL TRANSISTOR	
Q27,28			DTC114EK	DIGITAL TRANSISTOR	
Q29-31			DTC143TK	DIGITAL TRANSISTOR	
Q33			DTC143EK	DIGITAL TRANSISTOR	
Q501,502			DTC114EK	DIGITAL TRANSISTOR	

TX-RX UNIT (X57-4620-00)

C1			C90-2045-05	ELECTRO	2.2UF	25WV
C2,3			CK73FF1E104Z	CHIP C	0.10UF	Z
C4,5			CC73FCH1H330J	CHIP C	33PF	J
C6			C90-2045-05	ELECTRO	2.2UF	25WV
C7,8			CK73FF1E104Z	CHIP C	0.10UF	Z
C9-14			CC73FCH1H330J	CHIP C	33PF	J
C15			CC73FSL1H152J	CHIP C	1500PF	J
C16			CC73FCH1H101J	CHIP C	100PF	J
C17			CC73FSL1H152J	CHIP C	1500PF	J
C18			CC73FCH1H101J	CHIP C	100PF	J
C19-22			CK73FF1E104Z	CHIP C	0.10UF	Z
C23			C90-2045-05	ELECTRO	2.2UF	25WV
C24			CK73FB1H223K	CHIP C	0.022UF	K
C25			CK73FF1E104Z	CHIP C	0.10UF	Z
C26,27			CK73FB1H223K	CHIP C	0.022UF	K
C28			C90-2045-05	ELECTRO	2.2UF	25WV
C29			CK73FF1E104Z	CHIP C	0.10UF	Z
C30			CK73GB1H102K	CHIP C	1000PF	K
C31			CK73FB1H471K	CHIP C	470PF	K
C32			CK73FF1E104Z	CHIP C	0.10UF	Z
C33			CK73GB1H102K	CHIP C	1000PF	K
C34			C90-2045-05	ELECTRO	2.2UF	25WV
C36			CC73GCH1H330J	CHIP C	33PF	J
C37			CK73GB1H102K	CHIP C	1000PF	K
C38			CK73GB1H103K	CHIP C	0.010UF	K
C39,40			CK73FB1H102K	CHIP C	1000PF	K
C41			C90-2045-05	ELECTRO	2.2UF	25WV
C42			CK73FB1H103K	CHIP C	0.010UF	K
C44			CK73GB1H102K	CHIP C	1000PF	K
C45			CC73FCH1H121J	CHIP C	120PF	J
C46			CK73GB1H102K	CHIP C	1000PF	K
C50			CK73GB1H102K	CHIP C	1000PF	K

Ref. No.	Address	New parts	Parts No.	Description			Destination
C52			CE04EW1C470M	ELECTRO	47UF	16WV	
C53			CK73GB1E223K	CHIP C	0.022UF	K	
C54			CQ92M1H154K	MYLAR	0.15UF	K	
C55			CK73FB1H102K	CHIP C	1000PF	K	
C56			CE04EW1C101M	ELECTRO	100UF	16WV	
C57			CC73ECH1H202J	CHIP C	2000PF	J	
C58			CK73FB1H103K	CHIP C	0.010UF	K	
C59			CC73GCH1H680J	CHIP C	68PF	J	
C60			CC73GCH1H180J	CHIP C	18PF	J	
C61			CC73GCH1H060D	CHIP C	6.0PF	D	
C62			CC73GCH1H470J	CHIP C	47PF	J	
C63			CK73GB1H103K	CHIP C	0.010UF	K	
C64			CE04EW1C101M	ELECTRO	100UF	16WV	
C65,66			CK73GB1H102K	CHIP C	1000PF	K	
C67			CE04EW1C470M	ELECTRO	47UF	16WV	
C68,69			CK73GB1H102K	CHIP C	1000PF	K	
C100			CE04EW1C100M	ELECTRO	10UF	16WV	
C101			CK73FF1E104Z	CHIP C	0.10UF	Z	
C103			CE04EW1H010M	ELECTRO	1.0UF	50WV	
C104			CE04EW1C100M	ELECTRO	10UF	16WV	
C105			CK73GB1H102K	CHIP C	1000PF	K	
C106			CC73FCH1H102J	CHIP C	1000PF	J	
C107			CK73FF1E104Z	CHIP C	0.10UF	Z	
C108			CE04EW1C100M	ELECTRO	10UF	16WV	
C109			CK73FF1E104Z	CHIP C	0.10UF	Z	
C112			CC73FCH1H102J	CHIP C	1000PF	J	
C113,114			CQ92FM1H223K	MYLAR	0.022UF	K	
C116			CC73FCH1H102J	CHIP C	1000PF	J	
C118,119			CC73GCH1H271J	CHIP C	270PF	J	
C120			CE04EW1C100M	ELECTRO	10UF	16WV	
C121			CE04EW1H010M	ELECTRO	1.0UF	50WV	
C122			CC73FSL1H152J	CHIP C	1500PF	J	
C123			CC73GCH1H101J	CHIP C	100PF	J	
C124			CC73GCH1H221J	CHIP C	220PF	J	
C125			CK73GB1E223K	CHIP C	0.022UF	K	
C126			CE04EW1C100M	ELECTRO	10UF	16WV	
C127			CK73GB1H103K	CHIP C	0.010UF	K	
C128			CC73FSL1H221J	CHIP C	220PF	J	
C129			CC73FCH1H101J	CHIP C	100PF	J	
C130			CE04EW1C100M	ELECTRO	10UF	16WV	
C131			CK73FF1E104Z	CHIP C	0.10UF	Z	
C132			CE04EW1C100M	ELECTRO	10UF	16WV	
C133			CC73GCH1H101J	CHIP C	100PF	J	
C134			CK73GB1E223K	CHIP C	0.022UF	K	
C135			CE04EW1C100M	ELECTRO	10UF	16WV	
C136			CK73GB1E223K	CHIP C	0.022UF	K	
C137			CC73FCH1H102J	CHIP C	1000PF	J	
C138			CC73GCH1H221J	CHIP C	220PF	J	
C139			CC73GCH1H271J	CHIP C	270PF	J	
C140,141			CK73GB1E223K	CHIP C	0.022UF	K	
C142			CE04EW1C100M	ELECTRO	10UF	16WV	
C143			CK73GB1E223K	CHIP C	0.022UF	K	
C144		*	CQ92FM1H683K	MYLAR	0.068UF	K	
C145			CK73FB1E104K	CHIP C	0.10UF	K	
C146,147			CC73FCH1H102J	CHIP C	1000PF	J	
C150			CK73GB1E223K	CHIP C	0.022UF	K	
C151			CE04EW1C100M	ELECTRO	10UF	16WV	
C152			CC73FCH1H102J	CHIP C	1000PF	J	
C153			CC73GCH1H271J	CHIP C	270PF	J	

PARTS LIST

TX-RX UNIT (X57-4620-00)

Ref. No.	Address	New parts	Parts No.	Description			Destination
C154			CK73GB1E223K	CHIP C	0.022UF	K	
C155			CE04EW1C100M	ELECTRO	10UF	16WV	
C156			CK73FF1E104Z	CHIP C	0.10UF	Z	
C157			CK73GB1E223K	CHIP C	0.022UF	K	
C158			C90-2045-05	ELECTRO	2.2UF	25WV	
C159,160			CK73FF1E104Z	CHIP C	0.10UF	Z	
C161			CK73GB1E223K	CHIP C	0.022UF	K	
C162			CE04EW1C100M	ELECTRO	10UF	16WV	
C163			CK73FF1E104Z	CHIP C	0.10UF	Z	
C164			CE04EW1C100M	ELECTRO	10UF	16WV	
C165			CK73FF1E104Z	CHIP C	0.10UF	Z	
C166,167			CE04EW1C100M	ELECTRO	10UF	16WV	
C168,169			CK73FF1E104Z	CHIP C	0.10UF	Z	
C170			CK73GB1H103K	CHIP C	0.010UF	K	
C171-176			CE04EW1C100M	ELECTRO	10UF	16WV	
C177			CQ92M1H103K	MYLAR	0.010UF	K	
C178,179			CC73FSL1H152J	CHIP C	1500PF	J	
C180,181			CC73ECH1H202J	CHIP C	2000PF	J	
C182			CC73GCH1H331J	CHIP C	330PF	J	
C183-185			CC73FSL1H152J	CHIP C	1500PF	J	
C186			CE04EW1C100M	ELECTRO	10UF	16WV	
C187			CC73GCH1H331J	CHIP C	330PF	J	
C188			CK73GB1H562K	CHIP C	5600PF	K	
C189			CE04EW1C100M	ELECTRO	10UF	16WV	
C190			CC73GCH1H331J	CHIP C	330PF	J	
C191,192			CE04NW1C100M	ELECTRO	10UF	16WV	
C193			CK73GB1H103K	CHIP C	0.010UF	K	
C194			CE04NW1C100M	ELECTRO	10UF	16WV	
C195			CE04EW1H010M	ELECTRO	1.0UF	50WV	
C196,197			CE04NW1C100M	ELECTRO	10UF	16WV	
C198			CE04EW1C100M	ELECTRO	10UF	16WV	
C199,200			CE04NW1C220M	ELECTRO	22UF	16WV	
C201,202			CK73GF1E104Z	CHIP C	0.10UF	Z	
C203,204			CE04NW1E4R7M	ELECTRO	4.7UF	25WV	
C205			CE04EW1C100M	ELECTRO	10UF	16WV	
C206,207			CK73GF1E104Z	CHIP C	0.10UF	Z	
C208			CK73GB1E223K	CHIP C	0.022UF	K	
C209,210			CE04NW1C100M	ELECTRO	10UF	16WV	
C212,213			CE04NW1H010M	ELECTRO	1.0UF	50WV	
C214			CK73GB1H472K	CHIP C	4700PF	K	
C215,216			CE04EW1C100M	ELECTRO	10UF	16WV	
C218,219			CK73EF1E474Z	CHIP C	0.47UF	Z	
C221,222			CK73FB1H102K	CHIP C	1000PF	K	
C223			CE04EW1C471M	ELECTRO	470UF	16WV	
C224			CE04EW1C100M	ELECTRO	10UF	16WV	
C225			CE04EW1C470M	ELECTRO	47UF	16WV	
C226			CE04EW1C101M	ELECTRO	100UF	16WV	
C227			CE04EW1C100M	ELECTRO	10UF	16WV	
C228			CE04EW1C101M	ELECTRO	100UF	16WV	
C229			CE04EW1C100M	ELECTRO	10UF	16WV	
C230			CE04EW1C471M	ELECTRO	470UF	16WV	
C231,232			CK73EF1E474Z	CHIP C	0.47UF	Z	
C233			CQ92M1H154K	MYLAR	0.15UF	K	
C235,236			CK73FB1H102K	CHIP C	1000PF	K	
C237			CE04EW1E471M	ELECTRO	470UF	25WV	
C240			CC73FSL1H152J	CHIP C	1500PF	J	
C241			CE04EW1H010M	ELECTRO	1.0UF	50WV	
C300,301			CC73FCH1H101J	CHIP C	100PF	J	
C302			CC73GCH1H101J	CHIP C	100PF	J	

Ref. No.	Address	New parts	Parts No.	Description			Destination
C303,304			CC73FCH1H101J	CHIP C	100PF	J	
C305			CC73GCH1H101J	CHIP C	100PF	J	
C306,307			CC73FCH1H101J	CHIP C	100PF	J	
C308			CC73GCH1H101J	CHIP C	100PF	J	
C309,310			CC73FCH1H101J	CHIP C	100PF	J	
C312,313			CC73FCH1H101J	CHIP C	100PF	J	
C314			CC73GCH1H101J	CHIP C	100PF	J	
C315			CC73FCH1H101J	CHIP C	100PF	J	
C316-320			CK73FB1H102K	CHIP C	1000PF	K	
C321			CC73FSL1H471J	CHIP C	470PF	J	
C326,327			CK73GB1H102K	CHIP C	1000PF	K	
C330-333			CK73FB1H102K	CHIP C	1000PF	K	
C334			CK73GB1E223K	CHIP C	0.022UF	K	
C335			CC73GCH1H331J	CHIP C	330PF	J	
C336-340			CK73GB1E223K	CHIP C	0.022UF	K	
C341			CK73FF1E104Z	CHIP C	0.10UF	Z	
C342			CC73FSL1H152J	CHIP C	1500PF	J	
C343			CK73FB1H562K	CHIP C	5600PF	K	
C344			CK73GB1H472K	CHIP C	4700PF	K	
C345			CK73GB1E223K	CHIP C	0.022UF	K	
C346-348			CC73FCH1H101J	CHIP C	100PF	J	
C349,350			CK73FF1E104Z	CHIP C	0.10UF	Z	
C351			CK73GB1E223K	CHIP C	0.022UF	K	
C355			CE04NW1C100M	ELECTRO	10UF	16WV	
C356			CE04EW1HR47M	ELECTRO	0.47UF	50WV	
C357			CE04EW1C100M	ELECTRO	10UF	16WV	
C358-361			CK73FB1H103K	CHIP C	0.010UF	K	
C363			CK73GB1H103K	CHIP C	0.010UF	K	
C364			C90-2045-05	ELECTRO	2.2UF	25WV	
C365-375			CK73FB1H471K	CHIP C	470PF	K	
C376			CK73GB1E223K	CHIP C	0.022UF	K	
C377-379			CK73FB1H471K	CHIP C	470PF	K	
C381,382			CK73FB1H103K	CHIP C	0.010UF	K	
C383			CK73GB1H102K	CHIP C	1000PF	K	
C384			CK73FB1H102K	CHIP C	1000PF	K	
C385			CK73GB1H103K	CHIP C	0.010UF	K	
C386			CK73FB1H103K	CHIP C	0.010UF	K	
C387			CK73GB1H103K	CHIP C	0.010UF	K	
C388			CK73FB1H471K	CHIP C	470PF	K	
C389,390			CK73GB1H471K	CHIP C	470PF	K	
C391-394			CK73FB1H103K	CHIP C	0.010UF	K	
C395			CK73GB1H103K	CHIP C	0.010UF	K	
C400			CC73FSL1H471J	CHIP C	470PF	J	
C401			CK73FB1H103K	CHIP C	0.010UF	K	
C402			C90-2167-05	ELECTRO	100UF	16WV	
CN1			E40-3239-05	PIN CONNECTOR (4P)			
CN3			E40-3239-05	PIN CONNECTOR (4P)			
CN4			E40-3242-05	PIN CONNECTOR (7P)			
CN5		*	E40-5747-05	PIN CONNECTOR (11P)			
CN6			E40-3243-05	PIN CONNECTOR (8P)			
CN7			E40-5736-05	FLAT CABLE CONNECTOR (26P)			
CN8		*	E40-5740-05	FLAT CABLE CONNECTOR (20P)			
CN9			E40-3240-05	PIN CONNECTOR (5P)			
CN10			E40-3238-05	PIN CONNECTOR (3P)			
CN11		*	E40-5741-05	FLAT CABLE CONNECTOR (8P)			
CN12			E40-3237-05	PIN CONNECTOR (2P)			
CN13			E04-0191-05	RF COAXIAL CABLE SOCKET			
CN14-16			E02-2015-05	SOCKET FOR IC			
CN17			E40-5067-05	PIN CONNECTOR (10P)			

PARTS LSIT

TX-RX UNIT (X57-4620-00)

Ref. No.	Address	New parts	Parts No.	Description	Destination
J1			E11-0455-05	PHONE JACK (3.5D)	
J2			E11-0431-05	PHONE JACK	
J4			E63-0401-05	PHONO JACK	
J5			E06-1352-05	DIN SOCKET	
J6			E11-0455-05	PHONE JACK (3.5D)	
J7		*	E58-0428-05	SUB PLUG (D) 9P	
W1		*	E37-0536-05	LEAD WIRE WITH MINIPIN PLUG	
A1	4G	*	F01-1005-04	HEAT SINK	
A2	4F		F11-1127-04	SHIELDING CASE	
A3,4	4G		G02-0574-04	FLAT SPRING	
A5	4G		G02-0719-04	FLAT SPRING	
CF1,2			L72-0374-05	CERAMIC FILTER (455KHZ)	
CF3			L72-0366-05	CERAMIC FILTER (455KHZ)	
L1			L40-2285-48	SMALL FIXED INDUCTOR (220NH)	
L2			L40-4785-48	SMALL FIXED INDUCTOR	
L3			L40-1011-15	SMALL FIXED INDUCTOR	
L4		*	L34-4397-05	COIL	
L5			L40-1011-15	SMALL FIXED INDUCTOR	
L8		*	L40-4711-15	SMALL FIXED INDUCTOR	
L9			L40-1011-15	SMALL FIXED INDUCTOR	
L10			L40-1092-12	SMALL FIXED INDUCTOR	
L11-17			L40-1011-15	SMALL FIXED INDUCTOR	
L18			L40-1001-15	SMALL FIXED INDUCTOR	
L19,20		*	L39-1245-05	COIL	
L21		*	L40-2711-33	SMALL FIXED INDUCTOR	
L22,23			L40-2201-12	SMALL FIXED INDUCTOR	
L24,25			L40-1092-12	SMALL FIXED INDUCTOR	
L26			L40-1001-15	SMALL FIXED INDUCTOR	
R1			RK73FB2A103J	CHIP R 10K J 1/10W	
R2,3			RK73GB1J103J	CHIP R 10K J 1/16W	
R4-6			RK73GB1J101J	CHIP R 100 J 1/16W	
R7			RK73FB2A103J	CHIP R 10K J 1/10W	
R8			RK73GB1J682J	CHIP R 6.8K J 1/16W	
R9			RK73GB1J222J	CHIP R 2.2K J 1/16W	
R10			RK73GB1J330J	CHIP R 33 J 1/16W	
R11			RK73GB1J183J	CHIP R 18K J 1/16W	
R12			RK73FB2A103J	CHIP R 10K J 1/10W	
R13			RK73GB1J101J	CHIP R 100 J 1/16W	
R16			RK73GB1J680J	CHIP R 68 J 1/16W	
R17,18			RK73FB2A222J	CHIP R 2.2K J 1/10W	
R19			RK73GB1J101J	CHIP R 100 J 1/16W	
R21-24			RK73FB2A103J	CHIP R 10K J 1/10W	
R50			RK73GB1J682J	CHIP R 6.8K J 1/16W	
R51			RK73FB2A104J	CHIP R 100K J 1/10W	
R52			RK73GB1J392J	CHIP R 3.9K J 1/16W	
R53			RK73GB1J221J	CHIP R 220 J 1/16W	
R54			RK73GB1J152J	CHIP R 1.5K J 1/16W	
R55,56			RK73GB1J103J	CHIP R 10K J 1/16W	
R57			RK73GB1J334J	CHIP R 330K J 1/16W	
R58			RK73GB1J470J	CHIP R 47 J 1/16W	
R59			RK73GB1J151J	CHIP R 150 J 1/16W	
R60			RK73GB1J152J	CHIP R 1.5K J 1/16W	
R61			RK73GB1J333J	CHIP R 33K J 1/16W	
R62			RK73GB1J223J	CHIP R 22K J 1/16W	
R63			RK73GB1J102J	CHIP R 1.0K J 1/16W	
R64,65			RK73GB1J470J	CHIP R 47 J 1/16W	
R66			RK73GB1J221J	CHIP R 220 J 1/16W	

Ref. No.	Address	New parts	Parts No.	Description	Destination
R100			RK73FB2A100J	CHIP R 10 J 1/10W	
R101			RK73GB1J472J	CHIP R 4.7K J 1/16W	
R103			RK73GB1J102J	CHIP R 1.0K J 1/16W	
R104			RK73GB1J472J	CHIP R 4.7K J 1/16W	
R105			RK73GB1J102J	CHIP R 1.0K J 1/16W	
R106			RK73GB1J154J	CHIP R 150K J 1/16W	
R109			RK73GB1J102J	CHIP R 1.0K J 1/16W	
R110			RK73GB1J223J	CHIP R 22K J 1/16W	
R111			RK73GB1J222J	CHIP R 2.2K J 1/16W	
R113			RK73GB1J104J	CHIP R 100K J 1/16W	
R114			RK73GB1J472J	CHIP R 4.7K J 1/16W	
R117			RK73GB1J823J	CHIP R 82K J 1/16W	
R118			RK73GB1J222J	CHIP R 2.2K J 1/16W	
R119,120			RK73GB1J223J	CHIP R 22K J 1/16W	
R121,122			RK73GB1J123J	CHIP R 12K J 1/16W	
R123			RK73GB1J223J	CHIP R 22K J 1/16W	
R124			RK73GB1J103J	CHIP R 10K J 1/16W	
R126			RK73GB1J183J	CHIP R 18K J 1/16W	
R127,128			RK73GB1J103J	CHIP R 10K J 1/16W	
R129			RK73GB1J472J	CHIP R 4.7K J 1/16W	
R130			RK73GB1J223J	CHIP R 22K J 1/16W	
R131			RK73GB1J101J	CHIP R 100 J 1/16W	
R132			RK73GB1J472J	CHIP R 4.7K J 1/16W	
R133			RK73GB1J103J	CHIP R 10K J 1/16W	
R134,135			RK73GB1J152J	CHIP R 1.5K J 1/16W	
R136			RK73GB1J331J	CHIP R 330 J 1/16W	
R137			RK73FB2A102J	CHIP R 1.0K J 1/10W	
R138			RK73GB1J152J	CHIP R 1.5K J 1/16W	
R139			RK73GB1J223J	CHIP R 22K J 1/16W	
R140			RK73GB1J470J	CHIP R 47 J 1/16W	
R141			RK73GB1J392J	CHIP R 3.9K J 1/16W	
R142,143			RK73GB1J222J	CHIP R 2.2K J 1/16W	
R144			RK73GB1J101J	CHIP R 100 J 1/16W	
R145			RK73GB1J472J	CHIP R 4.7K J 1/16W	
R146,147			RK73GB1J101J	CHIP R 100 J 1/16W	
R148			RK73GB1J471J	CHIP R 470 J 1/16W	
R149			RK73GB1J101J	CHIP R 100 J 1/16W	
R150			RK73GB1J471J	CHIP R 470 J 1/16W	
R151			RK73GB1J472J	CHIP R 4.7K J 1/16W	
R152			RK73GB1J152J	CHIP R 1.5K J 1/16W	
R153,154			RK73GB1J331J	CHIP R 330 J 1/16W	
R155			RK73GB1J222J	CHIP R 2.2K J 1/16W	
R156			RK73GB1J332J	CHIP R 3.3K J 1/16W	
R157			RK73GB1J222J	CHIP R 2.2K J 1/16W	
R158,159			RK73GB1J472J	CHIP R 4.7K J 1/16W	
R160			RK73GB1J103J	CHIP R 10K J 1/16W	
R161			RK73GB1J222J	CHIP R 2.2K J 1/16W	
R162,163			RK73GB1J331J	CHIP R 330 J 1/16W	
R164			RK73GB1J222J	CHIP R 2.2K J 1/16W	
R165			RK73GB1J331J	CHIP R 330 J 1/16W	
R166			RK73GB1J392J	CHIP R 3.9K J 1/16W	
R167			RK73GB1J472J	CHIP R 4.7K J 1/16W	
R168			RK73GB1J100J	CHIP R 10 J 1/16W	
R169			RK73GB1J471J	CHIP R 470 J 1/16W	
R170			RK73GB1J101J	CHIP R 100 J 1/16W	
R171,172			RK73FB2A100J	CHIP R 10 J 1/10W	
R173			RK73GB1J101J	CHIP R 100 J 1/16W	
R174			RK73GB1J123J	CHIP R 12K J 1/16W	
R175			RK73FB2A123J	CHIP R 12K J 1/10W	

PARTS LIST

Ref. No.	Address	New parts	Parts No.	Description	Destination
R176			RK73FB2A183J	CHIP R 18K J 1/10W	
R177			RK73GB1J183J	CHIP R 18K J 1/16W	
R178			RK73FB2A153J	CHIP R 15K J 1/10W	
R179			RK73GB1J103J	CHIP R 10K J 1/16W	
R180			RK73GB1J821J	CHIP R 820 J 1/16W	
R181			RK73GB1J222J	CHIP R 2.2K J 1/16W	
R182			RK73GB1J103J	CHIP R 10K J 1/16W	
R183			RK73FB2A153J	CHIP R 15K J 1/10W	
R184			RK73GB1J272J	CHIP R 2.7K J 1/16W	
R185			RK73GB1J153J	CHIP R 15K J 1/16W	
R186			RK73FB2A222J	CHIP R 2.2K J 1/10W	
R187			RK73GB1J223J	CHIP R 22K J 1/16W	
R188			RK73GB1J101J	CHIP R 100 J 1/16W	
R189,190			RK73GB1J153J	CHIP R 15K J 1/16W	
R191,192			RK73GB1J222J	CHIP R 2.2K J 1/16W	
R193,194			RK73GB1J223J	CHIP R 22K J 1/16W	
R196			RK73FB2A472J	CHIP R 4.7K J 1/10W	
R197			RK73GB1J103J	CHIP R 10K J 1/16W	
R198,199			RK73GB1J104J	CHIP R 100K J 1/16W	
R200			RK73FB2A101J	CHIP R 100 J 1/10W	
R201			RK73GB1J221J	CHIP R 220 J 1/16W	
R202,203			RK73GB1J104J	CHIP R 100K J 1/16W	
R204			RK73GB1J222J	CHIP R 2.2K J 1/16W	
R205			RK73GB1J272J	CHIP R 2.7K J 1/16W	
R206			RK73GB1J224J	CHIP R 220K J 1/16W	
R207			RK73GB1J222J	CHIP R 2.2K J 1/16W	
R208			RK73GB1J123J	CHIP R 12K J 1/16W	
R209			RK73GB1J563J	CHIP R 56K J 1/16W	
R215			RK73GB1J681J	CHIP R 680 J 1/16W	
R220			RK73GB1J103J	CHIP R 10K J 1/16W	
R300			RK73FB2A100J	CHIP R 10 J 1/10W	
R301			RK73GB1J101J	CHIP R 100 J 1/16W	
R303-319			RK73GB1J101J	CHIP R 100 J 1/16W	
R320			RK73GB1J102J	CHIP R 1.0K J 1/16W	
R323			RK73GB1J101J	CHIP R 100 J 1/16W	
R325			RK73FB2A473J	CHIP R 47K J 1/10W	
R330			RK73GB1J470J	CHIP R 47 J 1/16W	
R331			RK73GB1J102J	CHIP R 1.0K J 1/16W	
R332			RK73GB1J222J	CHIP R 2.2K J 1/16W	
R334			RK73GB1J331J	CHIP R 330 J 1/16W	
R335			RK73GB1J101J	CHIP R 100 J 1/16W	
R336			RK73GB1J102J	CHIP R 1.0K J 1/16W	
R337,338			RK73GB1J124J	CHIP R 120K J 1/16W	
R339,340			RK73GB1J334J	CHIP R 330K J 1/16W	
R343			RK73GB1J471J	CHIP R 470 J 1/16W	
R344			RK73FB2A2R2J	CHIP R 2.2 J 1/10W	
R345-347			RK73GB1J101J	CHIP R 100 J 1/16W	
R348,349			RK73GB1J473J	CHIP R 47K J 1/16W	
R350,351			RK73FB2A473J	CHIP R 47K J 1/10W	
R352-354			RK73GB1J473J	CHIP R 47K J 1/16W	
R355			RK73GB1J103J	CHIP R 10K J 1/16W	
R356			RK73GB1J473J	CHIP R 47K J 1/16W	
R357			RK73GB1J103J	CHIP R 10K J 1/16W	
R358			RK73GB1J473J	CHIP R 47K J 1/16W	
R359			RK73GB1J101J	CHIP R 100 J 1/16W	
R364,365			RK73GB1J222J	CHIP R 2.2K J 1/16W	
R366			R92-1252-05	CHIP R 0 OHM	
R367,368			RK73FB2A473J	CHIP R 47K J 1/10W	
R369			RK73GB1J473J	CHIP R 47K J 1/16W	

TX-RX UNIT (X57-4620-00)

Ref. No.	Address	New parts	Parts No.	Description	Destination
R371-374			RK73GB1J473J	CHIP R 47K J 1/16W	
R376			RK73GB1J473J	CHIP R 47K J 1/16W	
R377,378			RK73FB2A473J	CHIP R 47K J 1/10W	
R379			RK73GB1J473J	CHIP R 47K J 1/16W	
R380-418			RK73FB2A103J	CHIP R 10K J 1/10W	
R419-428			RK73GB1J101J	CHIP R 100 J 1/16W	
R429			RK73FB2A103J	CHIP R 10K J 1/10W	
R430			RK73GB1J472J	CHIP R 4.7K J 1/16W	
R431,432			RK73GB1J103J	CHIP R 10K J 1/16W	
R433			RK73GB1J102J	CHIP R 1.0K J 1/16W	
R434			RK73GB1J470J	CHIP R 47 J 1/16W	
R435,436			RK73GB1J472J	CHIP R 4.7K J 1/16W	
VR1,2			R12-6732-05	TRIMMING POT. 470	
VR3			R12-6742-05	TRIMMING POT. 22K	
D1-4			RLS73	DIODE	
D5			1SV166	DIODE	
D7			DAP202K	DIODE	
D8			RLS73	DIODE	
IC1,2		*	DSP56002FC40	IC	
IC3		*	MBCG24173-6173	IC (GATE ARRAY)	
IC4		*	27C256PCJJTC-K	IC	
IC5		*	27C256PCJJUC-K	IC	
IC6		*	27C256PCJJVC-K	IC	
IC7		*	MCM56824AFN20	IC	
IC7		*	MCM56824AFN25	IC	
IC9		*	7032LC44JLQA	IC	
IC15			MB86001PF	IC	
IC16			AK4318-VS	IC	
IC17			NJM2100M	IC (OP AMPLIFIER)	
IC18			MC74HC4053F	IC (ANALOG SW)	
IC19-21			NJM4560M	IC (OP AMP X2)	
IC22		*	AD822AR	IC	
IC23			MC74HC4052F	IC (HPF)	
IC24			NJM2100M	IC (OP AMPLIFIER)	
IC25			AK5340-VS	IC (AD CONVERTER (18 Bit))	
IC26			M62363FP	IC (8bit D/A CONVERTER)	
IC27			AK4318-VS	IC	
IC28			NJM2100M	IC (OP AMPLIFIER)	
IC29			M51131L	IC (ELECTRO VOLUME)	
IC30			NJM2100M	IC (OP AMPLIFIER)	
IC31			M51131L	IC (ELECTRO VOLUME)	
IC33			LA4422	IC (AF POWER AMP/ 5.8W)	
IC34			PCM69AU	IC (18bit D/A CONVERTOR)	
IC35		*	AD822AR	IC	
IC36			NJM4560M	IC (OP AMP X2)	
IC37,38			UPC7805H	IC (VOLTAGE REGULATOR/ +5V)	
IC39			NJM78L05UA	IC (VOLTAGE REGULATOR/ +5V)	
IC40			NJM78L08UA	IC (VOLTAGE REGULATOR/ +8V)	
IC41,42			NJM3404AM	IC (OP AMP X2)	
IC43			NJM5532M	IC (OP AMP)	
IC44			TC7S04F	IC (2CH NAND GATE)	
Q1			DTC124EK	DIGITAL TRANSISTOR	
Q2,3			2SC2714(Y)	TRANSISTOR	
Q4			DTC124EK	DIGITAL TRANSISTOR	
Q5-7			2SC3324(G)	TRANSISTOR	
Q8			2SK210(GR)	FET	
Q9,10			2SC2714(Y)	TRANSISTOR	
Q12			2SC2712(Y)	TRANSISTOR	
Q13-17			2SC2412K(S)	TRANSISTOR	

PARTS LSIT

TX-RX UNIT (X57-4620-00)
VCO2 (X58-3390-03)

Ref. No.	Address	New parts	Parts No.	Description	Destination
Q22			DTC124EK	DIGITAL TRANSISTOR	
Q23			2SC2712(Y)	TRANSISTOR	
Q25			DTA143EK	DIGITAL TRANSISTOR	
Q26			DTC124XK	DIGITAL TRANSISTOR	
Q27			DTC143EK	DIGITAL TRANSISTOR	
VCO2 (X58-3390-03)					
–			B42-2437-04	S/NO LABEL	
C1			CK73FB1H102K	CHIP C 1000PF K	
C2			CC73FSL1H101J	CHIP C 100PF J	
C3			CC73FCH1H070D	CHIP C 7.0PF D	
C4			CC73FCH1H070D	CHIP C 7.0PF D	
C4			CC73FCH1H220J	CHIP C 22PF J	
C6			CC73FCH1H180J	CHIP C 18PF J	
C7			CC73FCH1H120J	CHIP C 12PF J	
C8,9			CK73FB1H102K	CHIP C 1000PF K	
C10			CC73FCH1H010C	CHIP C 1.0PF C	
C11			CK73FB1H102K	CHIP C 1000PF K	
TC1			C05-0331-15	TRIMMER CAPACITOR 10PF	
TP1 3			E23-0464-05	TERMINAL	
–			F11-1085-04	SHIELDING CASE	
–			F11-1086-14	SHIELDING COVER	
–			G13-0904-04	CUSHION (COVER)	
L1			L33-0690-05	CHOKE COIL (3.3UH)	
L2			L34-2353-05	COIL	
T	2F		N30-2604-41	PAN HEAD MACHIN SCREW	
R1			RK73FB2A682J	CHIP R 6.8K J 1/10W	
R2			RK73FB2A271J	CHIP R 270 J 1/10W	
R3			RK73FB2A330J	CHIP R 33 J 1/10W	
R4,5			RK73FB2A472J	CHIP R 4.7K J 1/10W	
R6			RK73FB2A471J	CHIP R 470 J 1/10W	
R7			RK73FB2A560J	CHIP R 56 J 1/10W	
D1			1SV164	DIODE	
Q1			2SK508NV(K52)	FET	
Q2			2SC2714(Y)	TRANSISTOR	

EXPLODED VIEW

H	M3 x 6 (F)	: N32-3006-46
I	M3 x 6 (OC)	: N33-3006-41
J	M2.6 x 6 (Br-Tap)	: N87-2606-46
K	M3 x 6 (Br-Tap)	: N87-3006-46
M	M2.6 x 8 (F-Tap)	: N88-2608-46
P	M3 x 10 (TP-T)	: N91-3010-46

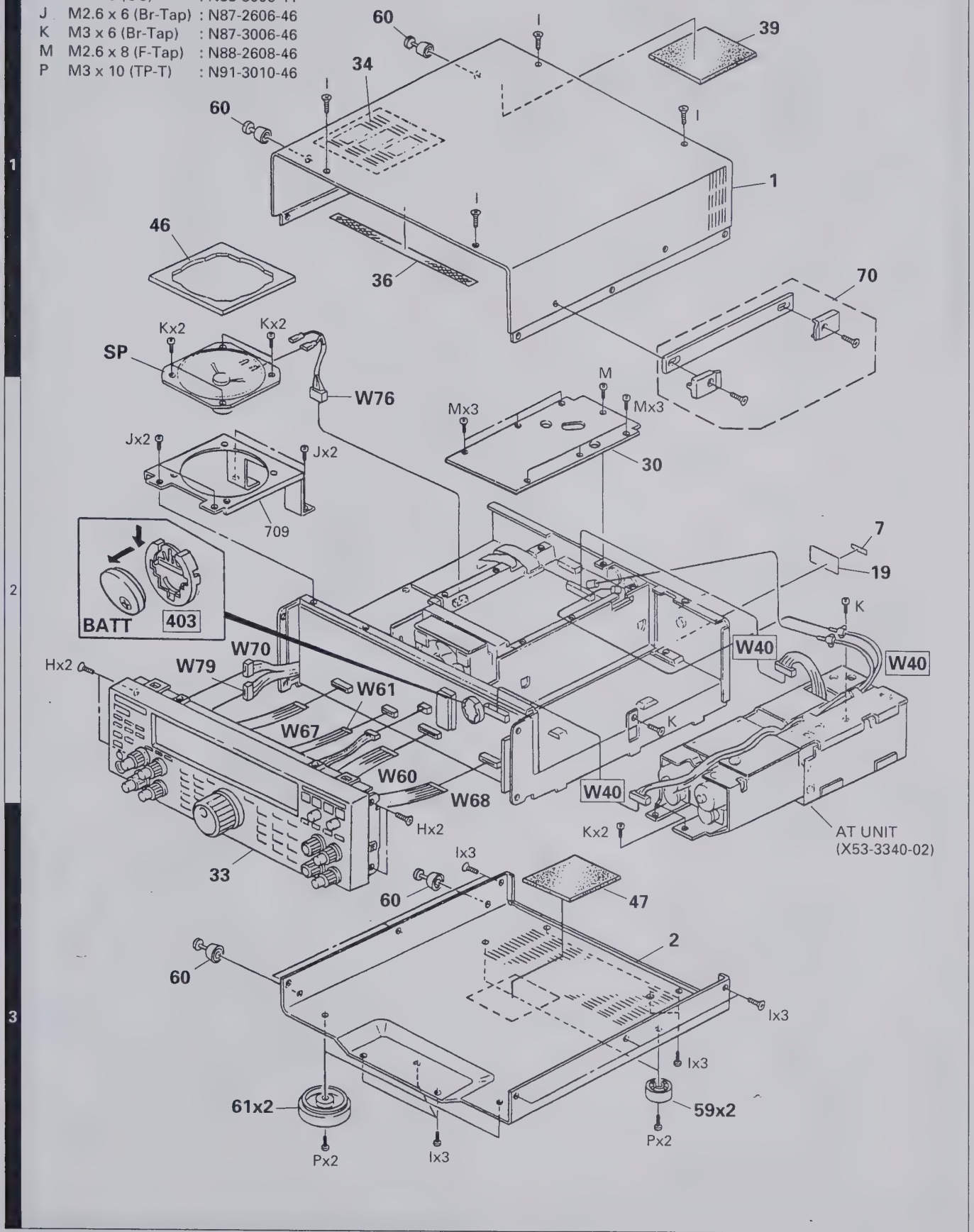

Parts with the exploded numbers larger than 700 are not supplied.

EXPLODED VIEW

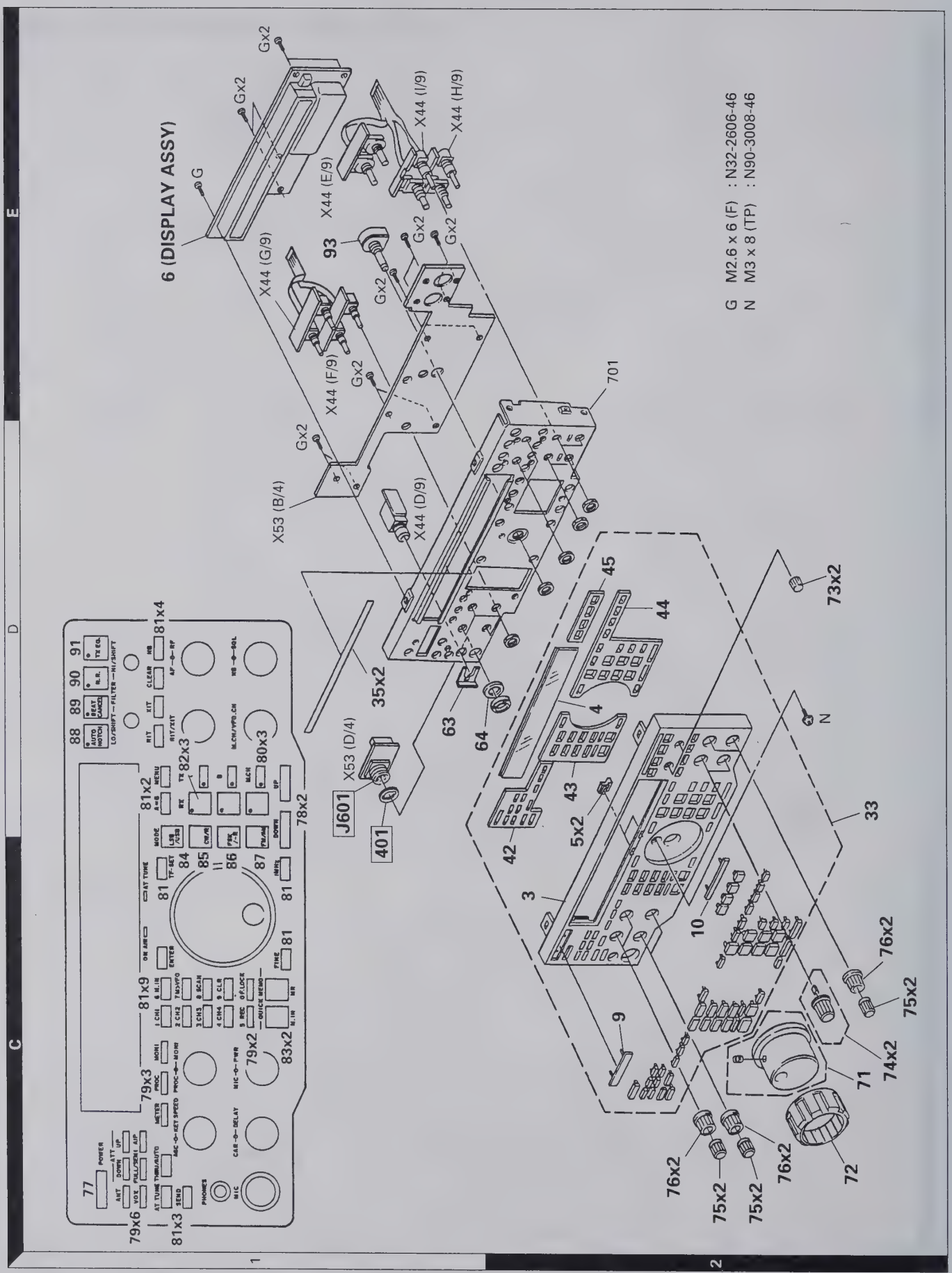

Parts with the exploded numbers larger than 700 are not supplied.

EXPLODED VIEW

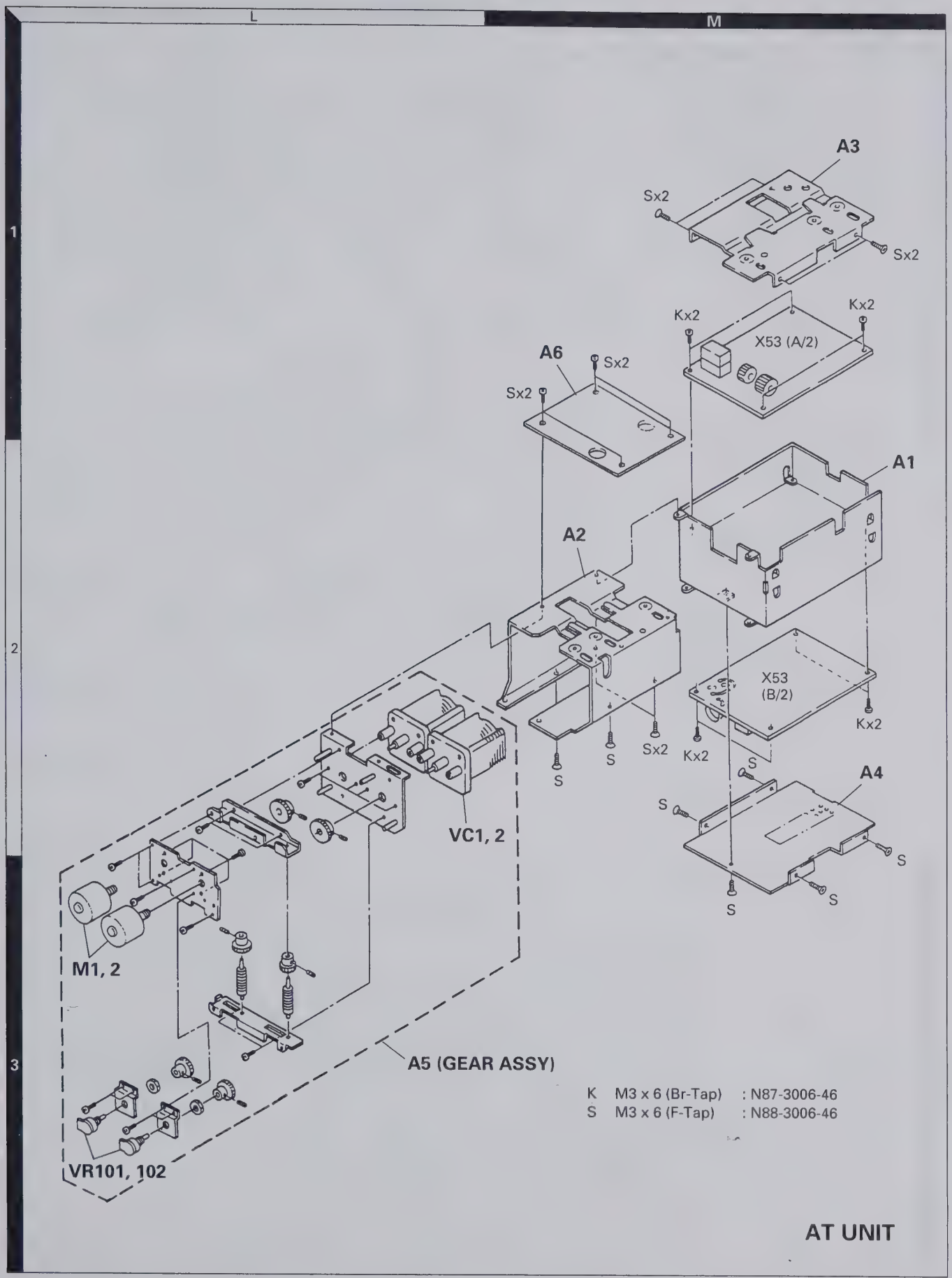

PACKING

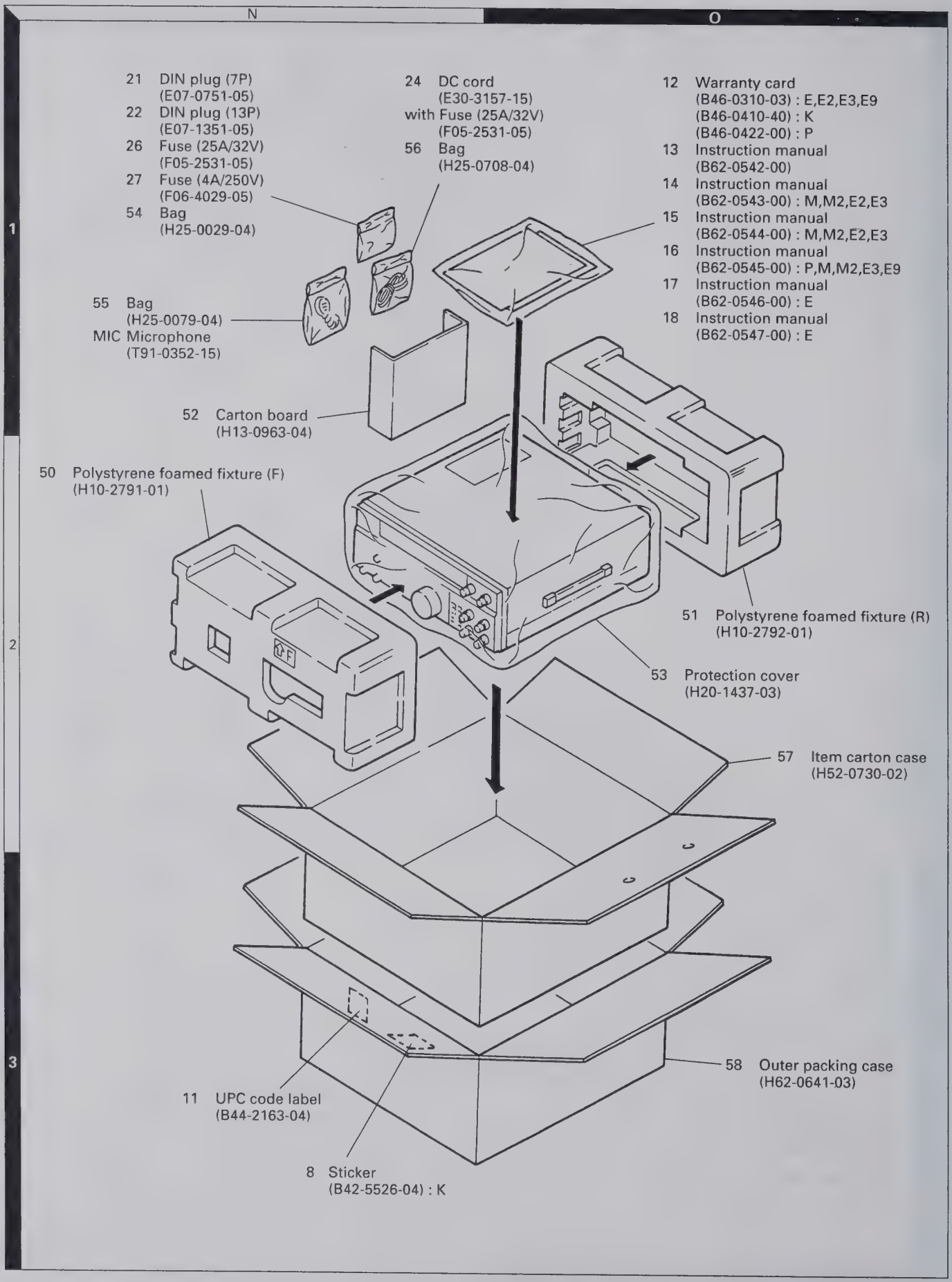
N
O
1
2
3
21 DIN plug (7P)
(E07-0751-05)
22 DIN plug (13P)
(E07-1351-05)
26 Fuse (25A/32V)
(F05-2531-05)
27 Fuse (4A/250V)
(F06-4029-05)
54 Bag
(H25-0029-04)
24 DC cord
(E30-3157-15)
with Fuse (25A/32V)
(F05-2531-05)
56 Bag
(H25-0708-04)
12 Warranty card
(B46-0310-03) : E,E2,E3,E9
(B46-0410-40) : K
(B46-0422-00) : P
13 Instruction manual
(B62-0542-00)
14 Instruction manual
(B62-0543-00) : M,M2,E2,E3
15 Instruction manual
(B62-0544-00) : M,M2,E2,E3
16 Instruction manual
(B62-0545-00) : P,M,M2,E3,E9
17 Instruction manual
(B62-0546-00) : E
18 Instruction manual
(B62-0547-00) : E
55 Bag
(H25-0079-04)
MIC Microphone
(T91-0352-15)
52 Carton board
(H13-0963-04)
50 Polystyrene foamed fixture (F)
(H10-2791-01)
51 Polystyrene foamed fixture (R)
(H10-2792-01)
53 Protection cover
(H20-1437-03)
57 Item carton case
(H52-0730-02)
58 Outer packing case
(H62-0641-03)
11 UPC code label
(B44-2163-04)
8 Sticker
(B42-5526-04) : K

ADJUSTMENT

Required Test Equipment

1. DC Voltmeter (DC V.M)
1) Input resistance : More than 1MΩ
2) Voltage range : 1.5 to 1000V AC/DC
Note : A high-recision multimeter may be used. However, accurate readings can not be obtained for high-impedance circuits.

2. DC Ammeter
1) Current range : 100mA, 1.5A, 15A, high-precision ammeter may be used.

3. RF VTVM (RF V.M)
1) Input impedance : 1MΩ and less than 3pF, min.
2) Voltage range : 10mV to 300V
3) Frequency range : 10kHz to 500MHz

4. AF Voltmeter (AF V.M)
1) Frequency range : 50Hz to 10kHz
2) Input resistance : 1MΩ or greater
3) Voltage range : 10mV to 30V

5. AF Generator (AG)
1) Frequency range : 200Hz to 5kHz
2) Output : 1mV or less to 1V, low distortion

6. AF Dummy Load (DM. SP)
1) Impedance : 8Ω
2) Dissipation : 3W or greater

7. Oscilloscope
Requires high sensitivity, and external synchronization capability (150MHz or greater).

8. Sweep Generator (Sweep G.)
1) Center frequency : 50kHz to 90MHz
2) Frequency deviation : Maximum ±35kHz
3) Output voltage : 100mV or greater

9. Standard Signal Generator (SSG)
1) Frequency range : 50kHz to 50MHz
2) Output : –133dBm/0.05μV to 7dBm/500mV
3) Output impedance : 50Ω
4) AM and FM modulation can be possible
Note : Generator must be frequency stable.

10. Frequency Counter (f. counter)
1) Minimum input voltage : 50mV
2) Frequency range : 150MHz or greater

11. Noise Generator (Noise G.)
Must generate ignition noise containing harmonics beyond 30MHz.

12. RF Dummy Load
1) Impedance : 150Ω and 50Ω
2) Dissipation : 150W or greater

13. Linear Detector
1) Frequency range : 30MHz

14. Power Meter
1) Impedance : 50Ω
2) Dissipation : 300W continuous or greater
3) Frequency limits : 60MHz or greater

15. Spectrum Analyzer
1) Frequency range : 100kHz to 110MHz or greater
2) Bandwidth : 1kHz to 3MHz

16. Detector
1) For adjustment of BPF

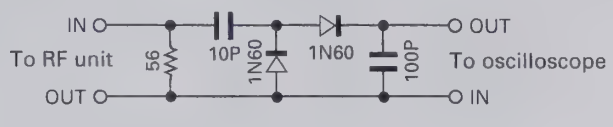

2) For adjustment of PLL/VCO BPF

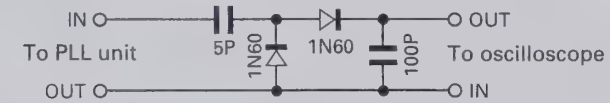

17. Directional Coupler

18. Monitor Receiver
R-1000 class

19. Microphone
MC-43S or MC-60S8

20. Tracking Generator

21. Distortion Meter

22. Double Signal Pad (50Ω)

ADJUSTMENT

Preparation

Unless otherwise specified, knobs and switches should be set as follows.

POWER	ON	PROCESSOR	Center
ATT	0	MIC	Center
AGC	Center	PWR	MAX
NB LEVEL	Center	CAR	Center
SQL	0		
AF	0		
RF	MAX		

Front Panel

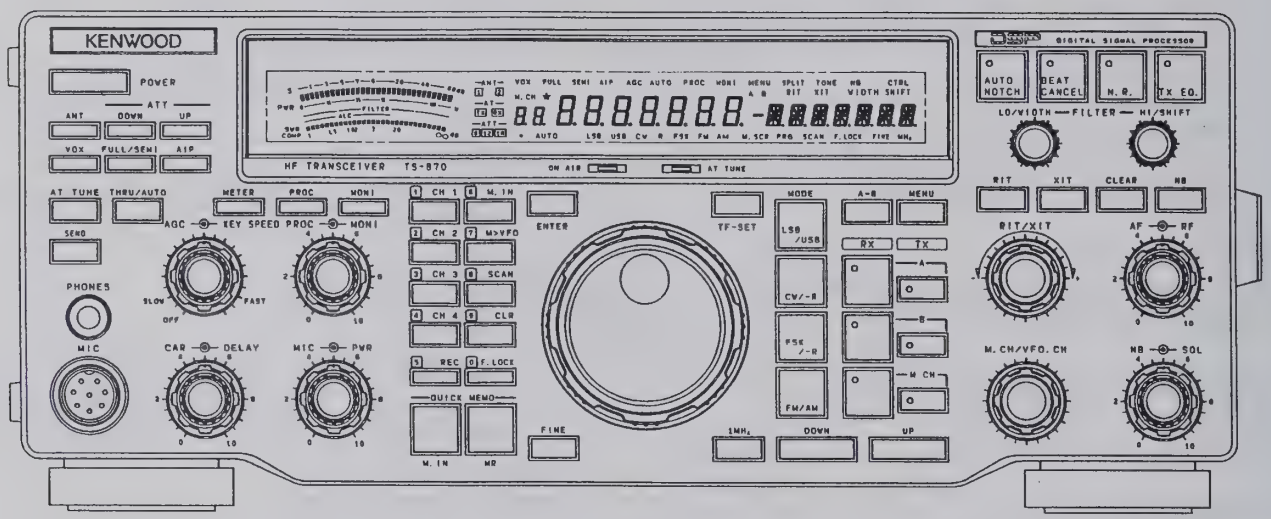

Rear Panel

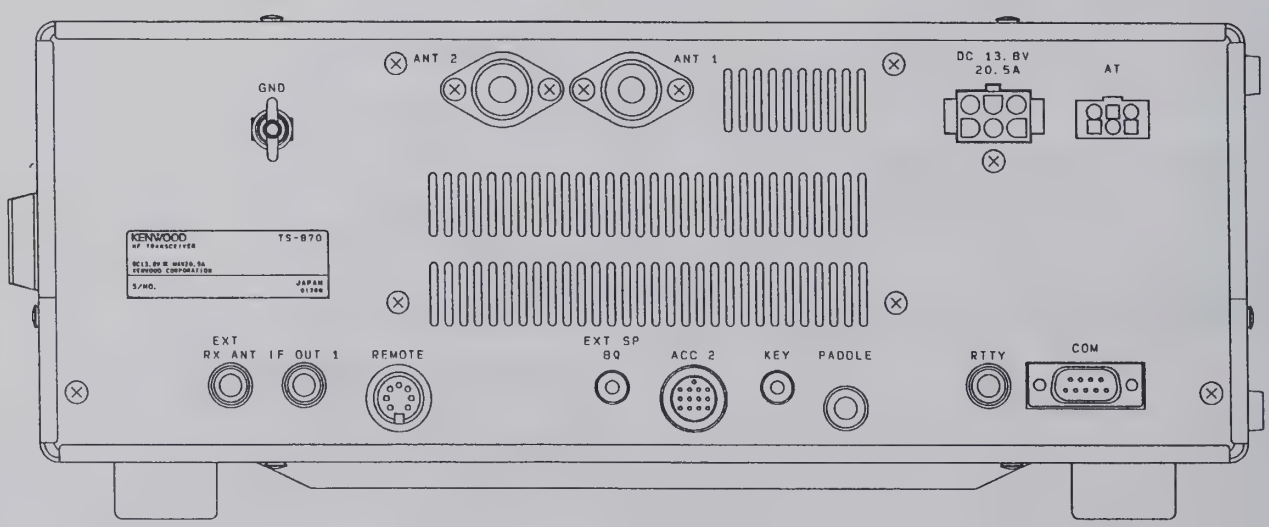

ADJUSTMENT

Service Jig

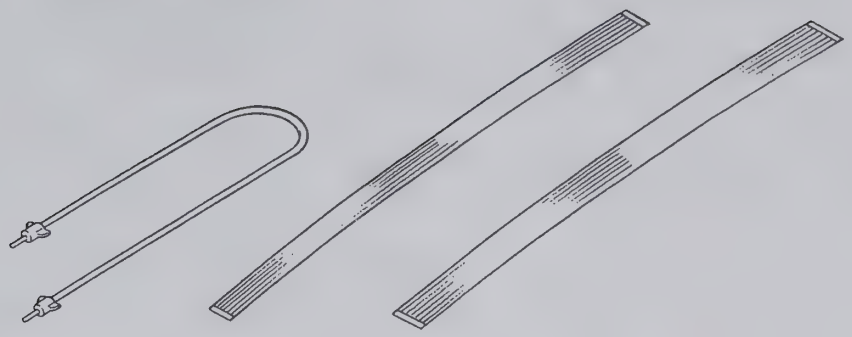

A. Lead wire with minipin plug
(E37-0064-05)
About 27cm

B . Flat cable (8P)
(E37-0581-05)
About 25cm

C. Flat cable (12P)
(E37-0580-05)
About 25cm

How to Use

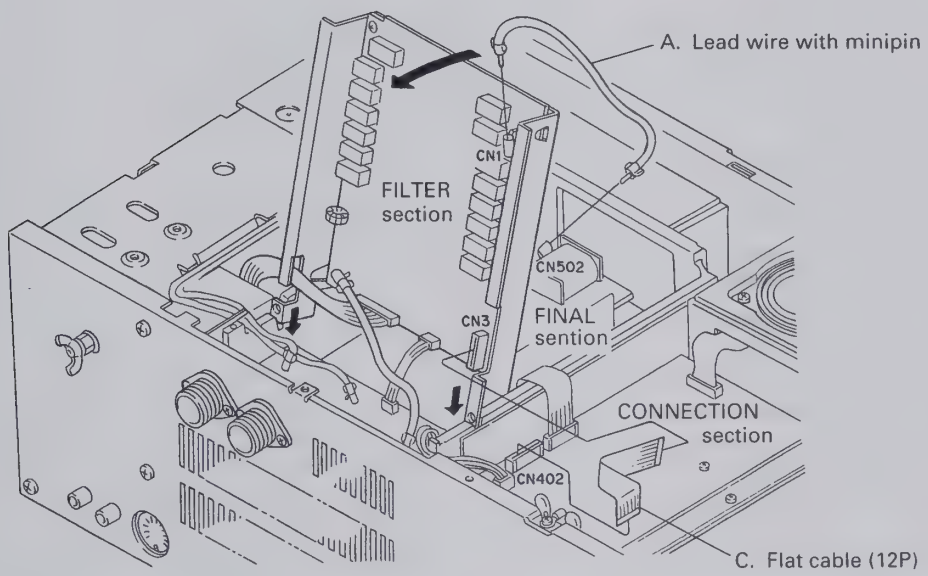

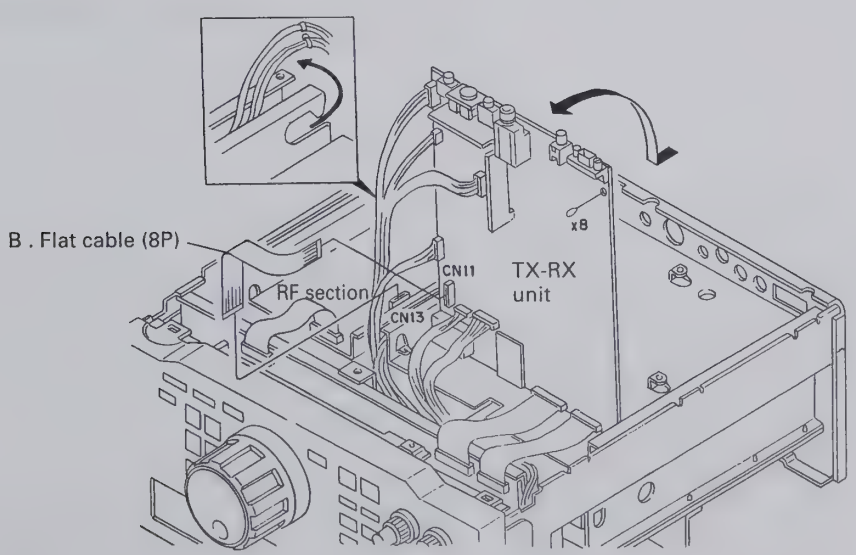

ADJUSTMENT

Service Adjustment Mode

■ Outline

- The TS-870S is adjusted by the normal method and by another method using the service adjustment mode.
- In the adjustment mode, there are 28 menu numbers A0 to BB. All adjustment data items are saved in the EEPROM.
- When the service adjustment mode is entered, data is read from the EEPROM and placed in the CPU RAM so that settings can be modified.
- The EEPROM is updated only when data is written in Menu No. BA.

  Note : Transmission is possible in reception-related adjustment modes.

■ Operation procedure

1. Adjustment mode start
   Hold down the [N.R.] key and [LSB/USB] key, and turn the [POWER] switch ON to enter the adjustment mode. The menu number will appear in M. CH on the display.
2. Adjustment mode menu number selection
   When the [M. CH/VFO. CH] control is turned, the menu number changes.
3. Adjustment mode data writing
   Press the [UP]/[DOWN] key or the microphone [UP]/[DOWN] key in MENU No. BA.
4. Adjustment mode cancel
   When the [CLR] key is pressed, the normal memory-channel display returns.

   Note : If the power is switched OFF in the adjustment mode, it is canceled.

Service Adjustment Mode Menu

Menu No.	Adjustment function	Description
A0	System	Checksum display (Program version confirmation)
A1	ALC	ALC reference voltage adjustment
A2	S-meter (SSB)	Start level setting
A3		S9 level setting
A4		Full-scale level setting
A5	Filter	8.83MHz IF filter center frequency correction
A6		455kHz IF filter center frequency correction
A7	Power adjustment	100W adjustment (With power meter curve)
A8		50W adjustment (With power meter curve)
A9		25W adjustment (With power meter curve)
AA		10W adjustment (With power meter curve)
AB	TX gain	1.9MHz band
AC		3.5MHz band
AD		7MHz band
AE		10MHz band
AF		14MHz band
B0		18MHz band
B1		21MHz band
B2		24.5MHz band
B3		29MHz band
B4	ALC meter	Stare level setting
B5		Maximum zone level setting
B6		Full-scale level setting
B7	SWR protection	Protection operation setting
B8	SWR meter	VSWR=3 level setting
B9	FM	FM deviation setting
BA	System	Writing into EEPROM
BB	Display	All LCD segments light (Not light ON AIR lamp)

ADJUSTMENT

Display Check

Item	Condition	Measurement			Adjustment			Specifications/Remarks
		Test-equipment	Unit	Terminal	Unit	Parts	Method	
1. All reset	1) DC IN : DC 13.8V Pushing [A=B] key down, [POWER] : ON.				Front panel	Display	After displaying HELLO, the display is reset as follows: DISP f. : 14.000.00 MODE : USB METER : ALC ANT : 1 AGC	Display should be normal. Should be at the reset frequency.
2. All LCD segments lignt	1) Menu No. : BB						Check	All LCD segments light.

PLL Section

Item	Condition	Measurement			Adjustment			Specifications/Remarks
		Test-equipment	Unit	Terminal	Unit	Parts	Method	
1. 20MHz frequency adj.	1) [POWER] : ON MODE : FM Receive	f. counter	PLL	CN510 (TP)	PLL	TC800	Frequency adjust.	20.000MHz ± 20Hz
2. 20MHz peak adj.	1) Display f. : 14.000MHz MODE : USB Receive	RF V.M		CN503		L528	MAX.	
3. 60MHz BPF adj.	1) MODE : FM Receive			IC506 2 pin		L529 L530	Repeat for MAX.	
4. 55MHz BPF adj. and frequency check	1) Display f. : 14.000MHz MODE : FM Receive			IC508 11 pin		L518 L519 L520	Repeat for MAX.	
	2) Display f. : 14.000MHz	f. counter					Frequency check	55.299~55.301MHz
5. Lock voltage adj. & check VCO1	1) Display f. : 30kHz	DC V.M		TP501	PLL	TC506	1.8V	1.8 ± 0.03V
	2) Display f. : 7.489MHz						Voltage check	4.5~7.0V
6. Lock voltage adj. & check VCO2	1) Display f. : 7.500MHz				PLL	TC507	1.8V	1.8 ± 0.03V
	2) Display f. : 14.489MHz						Voltage check	4.5~7.0V
7. Lock voltage adj. & check VCO3	1) Display f. : 14.490MHz				PLL	TC508	1.8V	1.8 ± 0.03V
	2) Display f. : 21.489MHz						Voltage check	4.5~7.0V
8. Lock voltage adj. & check VCO4	1) Display f. : 21.490MHz				PLL	TC509	1.8V	1.8 ± 0.03V
	2) Display f. : 30.000MHz						Voltage check	4.5~7.0V
9. Lock voltage adj. LO2A (VCO2) X58-3390-03	1) Display f. : 30.000MHz			TP502	VCO2 X58-3390	TC1	5.0V	5.0 ± 0.03V

ADJUSTMENT

Item	Condition	Measurement			Adjustment			Specifications/Remarks
		Test-equipment	Unit	Terminal	Unit	Parts	Method	
10. Output level check LO1 (CN504)	1) Display f. : 14.000MHz MODE : USB Receive			CN504			Output level check	–5~+2dBm
LO2A (CN505)	Meaturement condition : 50Ω terminated			CN505				–1~+6dBm (64.220MHz)
LO3 (CN502)				CN502				–6~+0dBm (8.375MHz)
20MHz (CN503)				CN503				–10~+0dBm (20.0000MHz)
LO4 (CN501)		Oscilloscope		CN501				–10~+0dBm (10.0kHz)
11. 20MHz frequency (Final check)	1) MODE : USB Receive	f. counter		CN510 (TP)	PLL	TC800	Check	20.000MHz ± 20Hz

Receiver Section

Item	Condition	Measurement			Adjustment			Specifications/Remarks
		Test-equipment	Unit	Terminal	Unit	Parts	Method	
1. DSP PLL lock voltage adj.	1) Display f. : 14.000MHz MODE : USB	DC V.M	TX-RX	TP1	TX-RX	L4	3.50V	±0.1V
2. AGC voltage adj.	1) Display f. : 14.000MHz MODE : CW [RF] GAIN : MAX [AGC] : OFF			TP2		VR2	3.00V	±0.1V
3. MCF adj.	1) Display f. : 14.000MHz MODE : USB [AGC] : OFF Spectrum analyzer setting Center f. : 73.050MHz Frequency span : 50kHz ATT : –10dBm VBW, RBW : 1kHz V.REF : 2dB/DIV	Spectrum analyzer Tracking generator	RF	CN16 CN17	RF	L65 L67 L70 L72	Adjust so that gain is max. and band shown at right becomes flat.	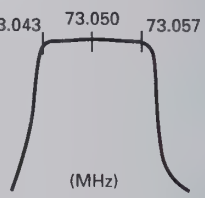
4. BPF adj.	1) Display f. : 7.000MHz MODE : USB [AGC] : OFF [AIP] : OFF Spectrum analyzer setting Center f. : 7.100MHz Frequency span : 2MHz	Spectrum analyser Tracking generator	Rear panel RF	ANT CN15	RF	L28 L29 L30 L31	Waveform is as shown in the figure at the right.	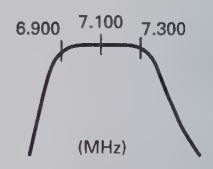
	2) Display f. : 14.000MHz Spectrum analyzer setting Center f. : 14.000MHz Frequency span : 5MHz					L38 L39 L40		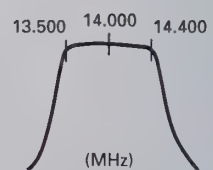
	3) Display f. : 21.000MHz Spectrum analyzer setting Center f. : 21.200MHz Frequency span : 10MHz					L44 L45 L46		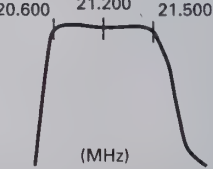

ADJUSTMENT

Item	Condition	Measurement			Adjustment			Specifications/Remarks
		Test-equipment	Unit	Terminal	Unit	Parts	Method	
(28MHz BPF adj.)	1) Display f. : 29.800MHz MODE : USB [AGC] : FAST SSG frequency : 22.101MHz SSG output : –113dBm	SSG AF V.M Oscilloscope DM. SP	Rear panel	ANT EXT. SP	RF	L50 L52	Adjust so that the gain is MAX.	MAX.
5. RX IF AMP adj.	1) Display f. : 14.100MHz MODE : USB [AGC] : OFF [AIP] : OFF AF output : 0.63V/8Ω SSG frequency : 14.101MHz SSG output : –119dBm	SSG AF V.M Oscilloscope DM. SP	Rear panel	ANT EXT. SP	RF Connection	L75 L77 L451 L452 L458	Repeat 2~3 times for MAX AF output reading.	
• Item 6 to 10 below are adjusted in the adjustment mode. To terminate the adjustment menu in the middle, save your settings with Menu No. BA.								
6. Checksum check	1) Menu No. : A0				Front panel	Display	Check	Display : E7b9
7. ALC voltage adj.	1) Menu No. : A1	DC V.M	RF	TP2	Front panel	[RIT/XIT] knob	2.70V	±0.02V
8. S-meter adj.	1) Menu No. : A2 SSG frequency : 14.101MHz SSG output : –110dBm	SSG AF V.M Oscilloscope DM. SP	Rear panel	ANT EXT. SP	TX-RX	VR1	Display : 05	±02
S1	2) Menu No. : A2 SSG output : –107dBm				Front panel	[UP] key	[UP] key : Push once time	Reference display : 12±06
S9	3) Menu No. : A3 SSG output : –81dBm							Reference display : 45±10
Full-scale	4) Menu No. : A4 SSG output : –23dBm							Reference display : 80±20
9. 8.83MHz IF filter adj.	1) Menu No. : A5 SSG1 f. : 1.79980MHz SSG1 output : –60dBm SSG2 f. : 1.80260MHz SSG2 output : –60dBm	SSG1 SSG2 Double signal pad Oscilloscope (10:1 probe)	Rear panel Connection	ANT TP401	Front panel	[RIT/XIT] knob	The waveforms must cross.	OK 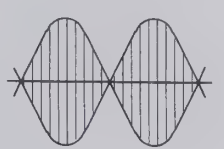
10. 455kHz IF filter adj.	1) Menu No. : A6			TP402				NG 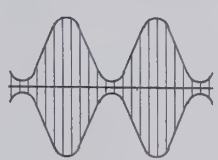
• Writing data : After items 6 to 10 have been adjusted: 1) Menu No. : BA 2) [UP] key : Push once time Display "rEAdy" → "good" (If "nG" is displayed, enter data again.) 3) [CLR] key : Push once time (Adjustment mode terminated)								

ADJUSTMENT

Item	Condition	Measurement			Adjustment			Specifications/Remarks
		Test-equipment	Unit	Terminal	Unit	Parts	Method	
11. ATT check	1) Display f. : 14.100MHz SSG frequency : 14.101MHz SSG output : –107dBm [AGC] : OFF [AIP] : OFF AF output : 1V/8Ω	SSG AF V.M Oscilloscope DM. SP	Rear panel	ANT EXT. SP	Front panel	ATT SW (UP/DOWN)	AF output should be lowered 6dB at time.	AF output ± 3dB
	a. ATT : 0dB						1.0V	ATT display : None
	b. ATT [UP] key : 6dB						0.5V	ATT display : 6
	c. ATT [UP] key : 12dB						0.25V	ATT display : 12
	d. ATT [UP] key : 18dB						0.125V	ATT display : 18
	e. ATT [DOWN] key : 12dB						0.25V	ATT display : 12
	f. ATT [DOWN] key : 6dB						0.5V	ATT display : 6
	g. ATT [DOWN] key : 0dB						1.0V	ATT display : None
12. S/N check	1) Display f. : Indicated below AF VR : 0.63V/8Ω SSG f. : Indicated below However, USB : +1kHz LSB : –1kHz	SSG AF V.M Oscilloscope Distortion meter DM. SP	Rear panel	ANT EXT. SP				Note : If the frequency is 7.5MHz or less, AIP turns ON automatically. Turn AIP OFF with the AIP switch before starting measurement.
	Frequency / MODE / SSG output / SSG MOD / DEV							
	100kHz AM –87dBm 1kHz 60%						S/N measurement	10dB or more.
	1.500MHz AM –77dBm 1kHz 60%							
	1.8MHz LSB –119dBm OFF OFF						MAX sensitivity measurement	0.7V/8Ω or more.
	3.5MHz LSB –119dBm OFF OFF							
	5.5MHz LSB –119dBm OFF OFF							
	7.1MHz LSB –119dBm OFF OFF							
	10.1MHz USB –119dBm OFF OFF							
	12.5MHz USB –119dBm OFF OFF							
	14.1MHz USB –119dBm OFF OFF ←						[AIP] : ON	Sensitivity down 5~15dB.
	18.1MHz USB –119dBm OFF OFF							
	21.1MHz USB –119dBm OFF OFF							
	24.8MHz USB –123dBm OFF OFF							
	29.8MHz USB –123dBm OFF OFF							
	29.8MHz FM –119dBm 1kHz 3kHz ←						SINAD sentitivity measurement	12dB SINAD or more.
13. SSB squelch check	1) Display f. : 14.100MHz MODE : USB [AGC] : OFF SSG frequency : 14.101MHz SSG output : OFF	SSG AF V.M Oscilloscope DM. SP	Rear panel	ANT EXT. SP	Front panel	[SQL] VR	Set to the point noise disappeared.	Knob position 10 : 00~14 : 00
	2) SSG output : –101dBm						Check	Squelch should open.
	3) [SQL] VR : Fully clockwise							Squelch should close.
	4) SSG output : –83dBm							Squelch should open.
14. FM squelch check	1) Display f. : 29.8MHz MODE : FM SSG output : OFF				Front panel	[SQL] VR	Set o the point noise disappeared.	Knob position 8 : 00~12 : 00
	2) SSG output : –119dBm SSG MOD : 1kHz SSG DEV : 3kHz						Check	Squelch should open.
	3) [SQL] VR : Fully clockwise							Squelch should close.
	4) SSG output : –100dBm							Squelch should open.

ADJUSTMENT

Item	Condition	Measurement			Adjustment			Specifications/Remarks
		Test-equipment	Unit	Terminal	Unit	Parts	Method	
15. NB adj.	1) Display f. : 14.100MHz MODE : USB SSG frequency : 14.101MHz SSG output : –90dBm	SSG AF V.M Oscilloscope DM. SP DC V.M	Rear panel RF	ANT EXT. SP TP1	RF	L81 L82	Voltage minimum	
	2) [NB] key : ON [NB] VR : Center	Noise G.	Rear panel	ANT			Adjust output of noise generator to small input (S1) and large input (S9) and check each.	Noise should disappear.
16. S-meter check	1) Display f. : 14.175MHz MODE : USB [AGC] : FAST [RF] GAIN : MAX SSG frequency : 14.176MHz SSG output : –107dBm	SSG AF V.M Oscilloscope DM. SP	Rear panel	ANT EXT. SP	Front panel	Display	S-meter level : S1	–111~–101dBm
	2) SSG output : –83dBm						S-meter level : S9	–89~–77dBm
	3) [NB] key : ON						S-meter level check	Same as when [NB] key off.
17. Auto notch check	1) Display f. : 14.175MHz MODE : USB SSG frequency : 14.1765MHz SSG output : –73dBm [AUTO NOTCH] key : Push (ON)	SSG	Rear panel	ANT	Front panel	Display	S-meter level check	S-meter off.
18. Voice check (equipped on VS-2)	1) [AF] VR : Arbitrary [MENU] key : Push (ON) [M.CH/VFO.CH] knob : Menu No. 48 [UP] key : Step 73 [MENU] key : Push (OFF) [FINE] key : Push (ON)						Check	The displayed frequency can be heard vocally.

Transmitter Section

Item	Condition	Measurement			Adjustment			Specifications/Remarks
		Test-equipment	Unit	Terminal	Unit	Parts	Method	
1. TX MCF adj.	1) Display f. : 14.200MHz MODE : USB Transmit Spectrum analyzer setting TG output : –10dBm Center f. : 8.83MHz Span : 10kHz V.REF : 2dB/DIV	Tracking generator Spectrum analyzer	RF	CN10 TP3	RF	L100	MAX.	
2. TX IF AMP adj.	1) Display f. : 14.200MHz MODE : CW [CAR] VR : Center Disconnect CN4 from the RF unit and connect a 50Ω dummy load. Transmit	50Ω dummy Oscilloscope	RF	CN4	RF Connection	L99,98 L95,94 L92,91 L89 VR3 L457 L456 L455	Repeat 2 or 3 times for MAX.	Reference value 2.5Vp-p or more
	2) After adjustment, set [CAR] VR to MAX for confirmation.							

ADJUSTMENT

Item	Condition	Measurement			Adjustment			Specifications/Remarks
		Test-equipment	Unit	Terminal	Unit	Parts	Method	
3. Final base current	1) Display f. : 14.200MHz MODE : USB [MIC] VR : MIN [CAR] VR : MIN Final unit VR501,502 : MIN Connect ammeter + : External power supply – : Power connector Adjust to minimum current with VR501 and VR502 in the final unit. Transmit	Ammeter			Final	VR501	Current drain (Minimum current) +250mA	First adjust VR501 and VR502 for minimum. Adjust VR501 for an increase of 250mA when switched to TX. Then adjust VR502 for 250mA over this reading.
						VR502	Current drain (Minimum current) + driver current (250mA) + 250mA.	
• Item 4 to 13 below are adjusted in the adjustment mode. To terminate the adjustment menu in the middle, save your settings with Menu No. BA.								
4. ALC adj.	1) Menu No. : A7 Transmit	Power meter	Rear panel	ANT	Front panel	[RIT/XIT] knob	100W	±5.0W
5. NULL adj.	1) Menu No. : A7 Transmit	Power meter DC V.M	Rear panel Filter	ANT CN5	Filter	TC1	MIN.	Reference value 0.5V or less
6. ALC frequency response adj.	1) TX [M.CH] key : Push Display f. : 29.700MHz MODE : CW Transmit	Power meter	Front panel	ANT	Filter	VR1	95W	±5.0W
	2) TX [M.CH] key : Push Menu No. : A7 Transmit						100W power check	100W ± 5W When unable to be set within the range, ALC and frequency response to be adjusted.
7. TX power adj. The power meter on the display is also calibrat--ed at the same time.	1) 50W Menu No. : A8 Transmit After adjustment, [UP] key : Push	Power meter	Rear panel	ANT	Front panel	[RIT/XIT] knob	50W	±3.0W
	2) 25W Menu No. : A9 Transmit After adjustment, [UP] key : Push						25W	±2.0W
	3) 10W Menu No. : AA Transmit After adjustment, [UP] key : Push						11W	±2.0W
8. TX gain adj.	1) 1.9MHz band Menu No. : AB Transmit	Power meter	Rear panel	ANT	Front panel	[UP] key	Press the [UP] key after the beep sounds for two or three seconds.	
	2) 3.5MHz band Menu No. : AC Transmit							
	3) 7.0MHz band Menu No. : AD Transmit							
	4) 10.1MHz band Menu No. : AE Transmit							
	5) 14.1MHz band Menu No. : AF Transmit							

ADJUSTMENT

Item	Condition	Measurement			Adjustment			Specifications/Remarks
		Test-equipment	Unit	Terminal	Unit	Parts	Method	
	6) 18.0MHz band Menu No. : B0 Transmit	Power meter	Rear panel	ANT	Front panel	[UP] key	Press the [UP] key after the beep sounds for two or three seconds.	
	7) 21.0MHz band Menu No. : B1 Transmit							
	8) 24.9MHz band Menu No. : B2 Transmit							
	9) 29.7MHz band Menu No. : B3 Transmit							
9. ALC meter adj.	1) 1 dot Menu No. : B4 Transmit	Power meter	Rear panel	ANT	Front panel	[UP] key	[UP] key : Push	
	2) Zone MAX Menu No. : B5 Transmit							
	3) Full Menu No. : B6 Transmit							
10. SWR protection adj.	1) Nenu No. : B7 Transmit After adjustment, [UP] key : Push	Through type power meter 150Ωdummy	Rear panel	ANT	Front panel	[RIT/XIT] knob	40W	±3.0W
11. SWR meter adj.	1) Menu No. : B8 Transmit					[UP] key	[UP] key : Push	
12. FM DEV adj.	1) Menu No. : B9 AG output : 1kHz/30mV Transmit	Power meter Linear detector AG	Rear panel Front panel	ANT MIC	Front panel	[RIT/XIT] knob	4.6kHz	±0.1kHz
13. FM MIC sense check	1) Menu No. : B9 AG output : 1kHz/3mV **E,X** AG output : 1kHz/5mV **K,P,M**						Check	3.0kHz ± 0.5kHz
• Writing data : After items 4 to 13 have been adjusted: 1) Menu No. : BA 2) [UP] key : Push once time Display "rEAdy" → "good" (If "nG" is displayed, enter data again.) 3) [CLR] key : Push once time (Adjustment mode terminated)								
14. Spurious adj.	1) Display f. : 24.900MHz MODE : CW Transmit	Power meter Spectrum analyzer	Rear panel	ANT	RF	VR2	±1.65MHz spurious level MIN.	−60dB or less
15. Monitor level check	1) Display f. : 21.100MHz MODE : USB [MONI] key : ON [MONI] VR : Center [MIC] VR : Center [AF] VR : MIN AG output : 1kHz/10mV Transmit	Power meter AF V.M Oscilloscope DM. SP AG AF V.M	Rear panel Front panel	ANT EXT. SP MIC	Front panel	Display	Check	0.2V ± 0.05V

ADJUSTMENT

Item	Condition	Measurement			Adjustment			Specifications/Remarks
		Test-equipment	Unit	Terminal	Unit	Parts	Method	
16. Processor check	1) Display f. : 14.200MHz MODE : USB [MIC] VR : Center [PROC] key : ON [METER] : COMP AG output : 1kHz/10mV	Power meter AG AF V.M	Rear panel Front panel	ANT MIC	Front panel	Display	Check	COMP meter : 15~25dB
	2) AG output : 1kHz/1mV							COMP meter : 1dot light
17. Sidetone check	1) Display f. : 14.200MHz MODE : CW [MONI] VR : Center Key down	AF V.M Oscilloscope DM. SP Electronic keyer jig	Rear panel	EXT. SP KEY			Check	0.63V ± 0.3V
18. CW break-in check	1) Display f. : 14.200MHz MODE : CW [VOX] key : ON [FULL/SEMI] key : FULL	Power meter Oscilloscope Electronic keyer jig	Rear panel	ANT KEY			Electronic keyer jig : Key down	Full break-in operation (When the key is turned OFF, the receive mode returns immediately.)
	2) [FULL/SEMI] key : SEMI [DELAY] knob : Center							Semi break-in operation (When the key is turned OFF, the receive mode returns after a while.)
19. DRU check (equipped on DRU-3)	1) Connect a microphone to the MIC jack. MODE : USB/LSB [MIC] VR : Center [REC] key : Push						Hold down the [CH1], and talk into the microphone.	Can be recorded for about 15 seconds.
							Release and press the [CH1] key again.	The recorded voice must be played back.
20. Sub tone check	1) Display f. : 29.100MHz MODE : FM MIC jack : 600Ω terminated [A=B], [TX-B] key : Push [M.IN] key : Push two times [RX-M.CH] : Push Transmit	Power meter Linear detector Oscilloscope f. counter Microphone	Rear panel Front panel	ANT MIC			Check	DEV : ±0.5~1.0kHz Tone f. : 88.2~88.7Hz
21. TX frequency check	1) Display f. : 29.100MHz MODE : CW Transmit							29.100.000MHz ± 145Hz
22. TX frequency characteristic check	1) Display f. : 14.200MHz MODE : USB/LSB MIC jack : Connect to AG AG output : 1kHz/5mV 400Hz/5mV 2.6kHz/5mV Transmit	Power meter Oscilloscope AG AF V.M	Rear panel Front panel	ANT MIC			a. Set AG to 1.0kHz and turn the [MIC] VR to set to 100W. b. Change the AG frequency and measure the difference between the power levels at 1.0kHz and at another frequency. c. Take a measurement for each USB and LSB.	Within 6dB

ADJUSTMENT

Item	Condition	Measurement			Adjustment			Specifications/Remarks
		Test-equipment	Unit	Terminal	Unit	Parts	Method	
23. Processor check	1) Display f. : 14.200MHz MODE : USB [PROC] key : ON [METER] key : Push [PROC] VR : MIN MIC jack : Connect to AG AG output : 1.0kHz/1mV Transmit						Change [PROC] VR so that the first segment on the COMP meter lights.	
	2) AG output : 1.0kHz /10mV (20dB UP) Transmit						Check	COMP meter : within 15~25dB
24. AT	1) Display f. : Indicated below MODE : CW [METER] : SWR [THRU/AUTO] : AUTO Transmit After checked retuen to receive mode.	Through type power meter 150Ωdummy	Rear panel	ANT	Front panel	Display	Check	ON AIR LED light. AT TUNE LED light. When tuning completed, LEDs off.
	2) [AT TUNE] key : ON	Frequency 1.910MHz 3.500 3.700 7.000 10.100 14.000 18.100 21.000 24.900 29.700			AT	TC1	Note : When 29.700MHz and SWR 1.0 to 1.3, variiable capacitor has flutters so that it does not stop, adjust the TC1 at which SWR 1.2 or less is acceptable.	Begins AT tuning after entering the transmission state. This should stop within roughly 6 seconds. SWR : 1.2 or less Power : 70W or more

Adjustment Points

■ Side view

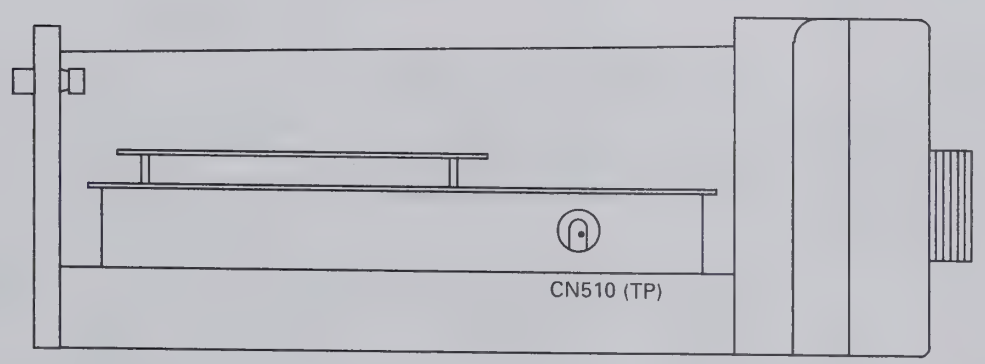

ADJUSTMENT

■ Upper view

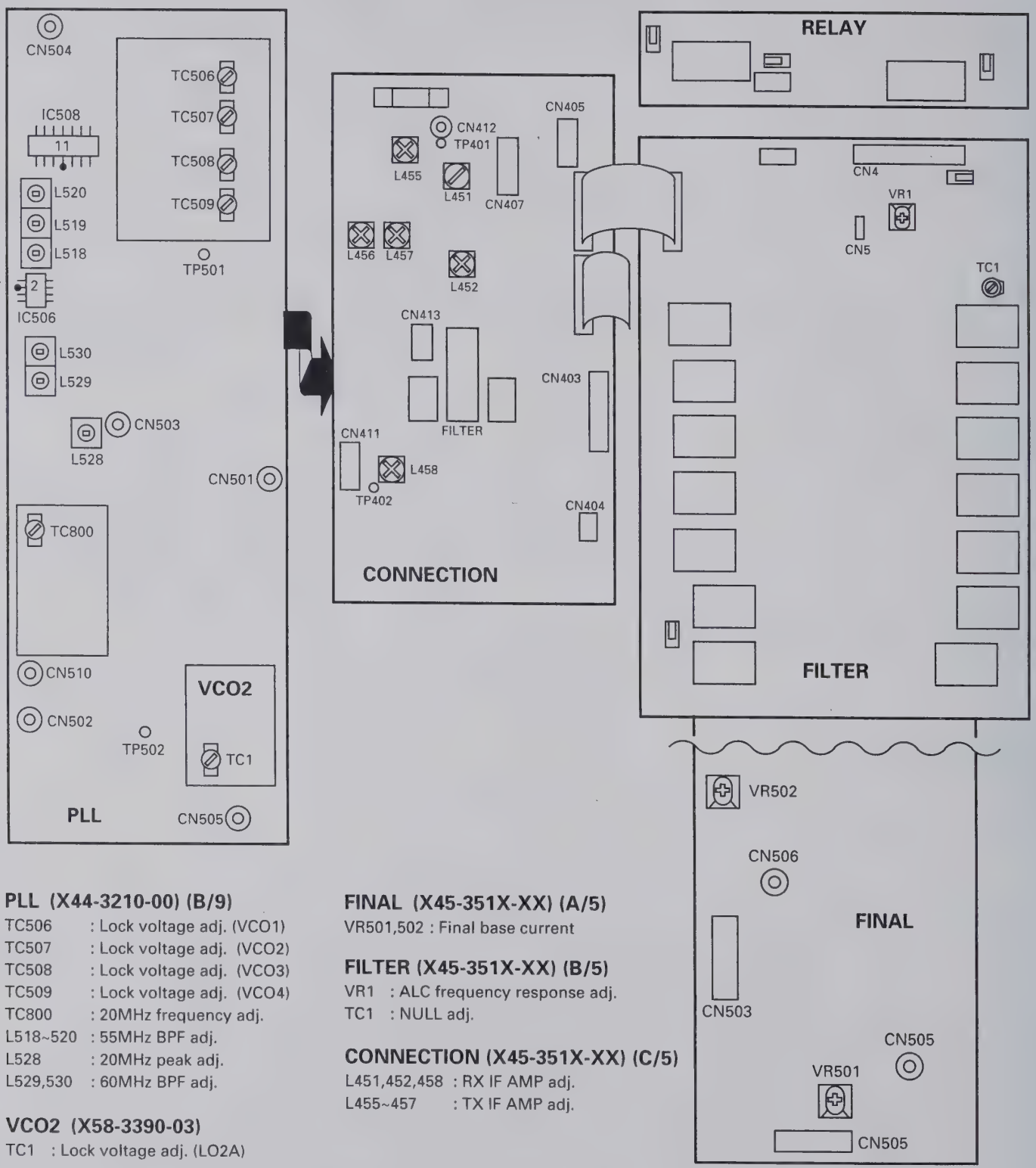

PLL (X44-3210-00) (B/9)

TC506 : Lock voltage adj. (VCO1)
TC507 : Lock voltage adj. (VCO2)
TC508 : Lock voltage adj. (VCO3)
TC509 : Lock voltage adj. (VCO4)
TC800 : 20MHz frequency adj.
L518~520 : 55MHz BPF adj.
L528 : 20MHz peak adj.
L529,530 : 60MHz BPF adj.

VCO2 (X58-3390-03)

TC1 : Lock voltage adj. (LO2A)

FINAL (X45-351X-XX) (A/5)

VR501,502 : Final base current

FILTER (X45-351X-XX) (B/5)

VR1 : ALC frequency response adj.
TC1 : NULL adj.

CONNECTION (X45-351X-XX) (C/5)

L451,452,458 : RX IF AMP adj.
L455~457 : TX IF AMP adj.

ADJUSTMENT

■ **Lower view**

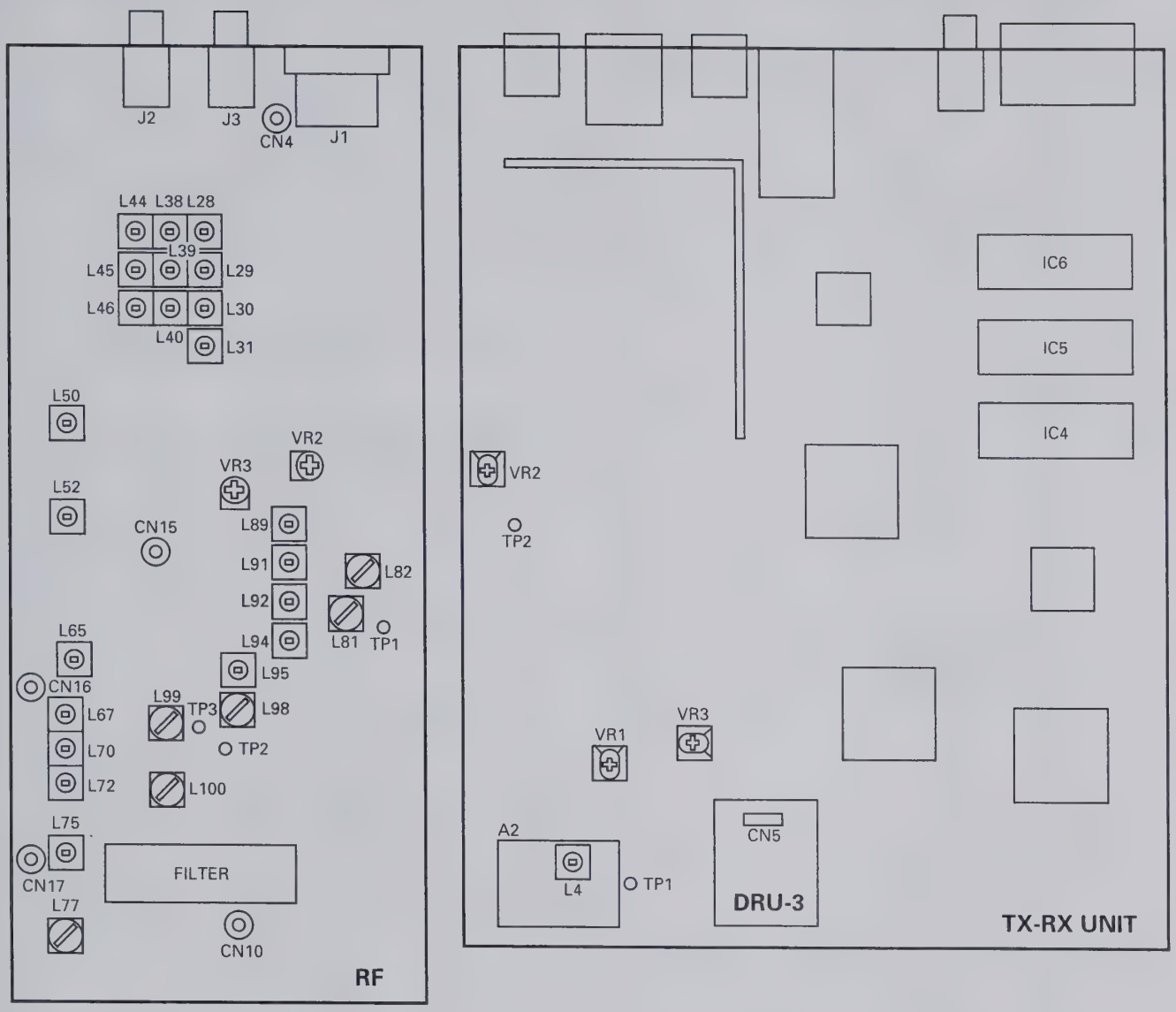

RF (X44-3210-00) (A/9)

VR2	: Spurious adj.
VR3,L89,91,92,94,95,98,99	: TX IF AMP adj.
L28~31,38~40,44~46,50,52	: BPF adj.
L65,67,70,72	: MCF adj.
L75,77	: RX IF AMP adj.
L81,82	: NB adj.
L100	: TX MCF adj.

TX-RX UNIT (X57-4620-00)

VR1	: S-meter adj.
VR2	: AGC voltage adj.
VR3	: DRU-3 recording level adj. (Adjusted to the mechanical center)
L4	: DSP PLL lock voltage adj.

TERMINAL FUNCTION

CN No.	Pin No.	Name	Function
RF UNIT (X44-3210-00) (A/9) : RF			
CN2	Coaxial	RAT	RX signal
CN4	Coaxial	DRV	TX drive signal
CN5	Coaxial	LO1	1st local oscillation 73.08~103.05MHz
CN6	Coaxial	LO2A	2nd local oscillation 64.22MHz
CN7	1	TXB	TX 8V
	2	RXB	RX 8V
	3	AGC	AGC voltage
CN10	Coaxial	TR88	RX IF output/TX IF input 8.83MHz
CN13	1	SPO	Speaker signal
	2	CKY	Keying signal
	3	AGC	AGC voltage
	4	TXC	TX : "H"
	5	RXC	RX : "H"
	6	8A	Analog 8V
	7	14S	14V-switched
	8	GND	GND
CN14	1	15K	Filter selection 15kHz
	2	3K	Filter selection 3kHz
	3	6K	Filter selection 6kHz
	4	VSF	Forward wave detection voltage
	5	VSF	Reflected wave detection voltage
	6	ALM	ALC meter output
	7	THP	Thermal protection
	8	NC	
	9	UCK2	RF serial/parallel convert clock
	10	UDA2	RF serial/parallel convert data
	11	ENR1	RF serial/parallel convertor IC1 enable
	12	ENR2	RF serial/parallel convertor IC2 enable
	13	ENR3	DAC enable
	14	NC	
	15	RBK	RF blank signal
	16	–6	–6V
	17	GND	GND
	18	NC	
	19	SS	TX/RX control signal TX : "L"
	20	NC	
J1	1	SPO	Speaker signal
	2	COM	Relay common terminal
	3	SS	TX/RX control signal
	4	MKE	TX relay close
	5	BRK	TX relay open
	6	ALC	ALC input
	7	RL	13V output when TX
J2		EXT RX	External receiver output
J3		IF OUT	SM-230
RF UNIT (X44-3210-00) (B/9) : PLL			
CN500	1	GND	GND
	2	NFMT	FM modulation on/off signal (FM TX : "L")
	3	VB3	21.489~30MHz } VCO select signal Active "H"
	4	VB2	14.489~21.489MHz
	5	VB1	7.489~14.489MHz
	6	VB0	0~7.489MHz
	7	UNL	Unlock detection output (Unlock : "H")
	8	GND	GND
	9	PLE2	PLL2 enable signal (LO2A)
	10	PLE1	PLL1 enable signal (LO1)
	11	PCK	Clock
	12	PDA	PLL, DDS data
	13	14D	14V
	14	DLE3	DDS3 enable signal (LO4)
	15	DLE2	DDS2 enable signal (LO3)
	16	DLE1	DDS1 enable signal (LO1)
	17	TXC	PLL DDS latch select signal (TX : "H")
	18	GND	GND
	19	9P	9V
	20	5P	5V
CN501	1	GND	GND
	2	LO4	DDS3 output
CN502	Coaxial	LO3	DDS2 output (8.375MHz)
CN503	Coaxial	REF	Reference signal output for TX-RX unit (20MHz)
CN504	Coaxial	LO1	LO1 output (73.08~103.05MHz)
CN505	Coaxial	LO2A	LO2A output (64.22MHz)
CN506	1	FMD	FM modulation signal
	2	GND	GND
	3	GND	GND
RF UNIT (X44-3210-00) (D/9) : PHONE			
CN901	1	SPI1	Phone jack through
	2	SPG	GND
	3	SPO1	Phone jack output
RF UNIT (X44-3210-00) (E, F, G, H, I/9) : VR			
CN903	1	DGND	Digital GND
	2	VPWR	MIC/PWR VR 1
	3	VMIC	MIC/PWR VR 2
	4	VDLY	CAR/DELAY VR 1
	5	VCAR	CAR/DELAY VR 2
	6	5D	5V
CN904	1	DGND	Digital GND
	2	VMON	PROC/MONI VR 1
	3	VPRC	PROC/MONI VR 2
	4	VKEY	AGC/KEY VR 1
	5	VAGC	AGC/KEY VR 2
	6	5D	5V
CN905	1	NC	
	2	WENB	Width encoder B
	3	WENA	Width encoder A
	4	SENB	Shift encoder B
	5	SENA	Shift encoder A
	6	GND	GND
CN906	1	GND	GND
	2	VRF	AF/RF VR 1
	3	VAF	AF/RF VR 2
	4	RENA	RIT encoder A
	5	RENB	RIT encoder B
	6	5D	5V
CN907	1	GND	GND
	2	VSQL	NB/SQL VR 1
	3	VNB	NB/SQL VR 2
	4	CENA	M.CH encoder A
	5	CENB	M.CH encoder B
	6	5D	5V
FINAL UNIT (X45-351X-XX) (A/5) : FINAL			
CN501	Coaxial	DRV	Drive input (From RF)
CN502	Coaxial	PO	TX signal output (To FILTER)
CN503	1	14S	13.8V
	2	14S	13.8V
	3	TXB	TX 13.8V
	4	GND	GND
	5	GND	GND
CN504	1	14V	13.8V
	2	14V	13.8V
	3	GND	GND

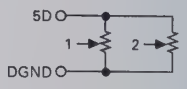

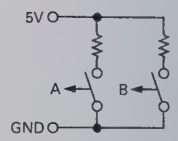

TERMINAL FUNCTION

CN No.	Pin No.	Name	Function
W501	Board in	14F	Power supply 13.8V connecting harness
		14F	Power supply 13.8V connecting harness
		GND	Power supply 13.8V connecting harness
		GND	Power supply 13.8V connect ing harness
FIANL UNIT (X45-351X-XX) (B/5) : FILTER			
CN1	Coaxial	PO	Filter input signal
CN2	Coaxial	ATO	TX output signal (To AT)
CN3	1	8A	8V
	2	GND	GND
	3	GND	GND
	4	14S	14V
	5	14S	14V
	6	UCK2	Shift register clock
	7	UDA2	Shift register data
	8	ENF1	Shift register enable
	9	DGND	Digital GND
	10	TXB	TX power 8V
	11	VSF	Forward wave detection voltage
	12	VSR	Reflected wave detection voltage
CN4	1	ATA	Make for AT through/on relay
	2	28AT	24.5~30MHz
	3	25AT	21.5~24.5MHz
	4	18AT	18.5~21.5MHz
	5	14AT	14.5~18.5MHz
	6	10AT	10.5~14.5MHz
	7	7AT	4.0~7.5MHz
	8	4AT	2.5~4.0MHz
	9	GND	GND
	10	14S	14V
	11	GND	GND
W1	1	RL	TX/RX select signal output
	2	ANTS	ANT 1/2 select signal output
	3	GND	GND
FINAL UNIT (X45-351X-XX) (C/5) : CONNECTION			
CN401	1	15K	455kHz filter select "L" : Filter on
	2	3K	455kHz filter select "L" : Filter on
	3	6K	455kHz filter select "L" : Filter on
	4	TT	External AT tuning control (Pass through)
	5	TS	External AT tuning control (Pass through)
	6	UCK2	Pass through
	7	UDA2	Pass through
	8	ENF1	Pass through
	9	VSF	Pass through
	10	VSR	Pass through
	11	THP	Pass through
	12	14D	14V
	13	14D	14V
	14	14V	14V
	15	14V	14V
	16	PWS	Power switch on : "H"
	17	9P	PLL power 9V
	18	5P	PLL power 5V
	19	–6	–6V output
	20	GND	GND
CN402	1	8A	8V
	2	GND	GND
	3	GND	GND
	4	14S	13.8V
	5	14S	13.8V
	6	UCK2	Pass through
	7	UDA2	Pass through
	8	ENF1	Pass through
	9	DGND	Digital GND
	10	TXB	TX power 8V
	11	VSF	Pass through
	12	VSR	Pass through
CN403	1	14A	13.8V
	2	14S	13.8V
	3	8D	Digital 8V
	4	8A	Analog 8V
	5	APG	GND
	6	SPO3	Speaker output signal input
	7	SPG	Speaker GND
CN404	1	SPG	Speaker GND
	2	SP	Speaker output signal
CN405	1	14S	13.8V
	2	14S	13.8V
	3	AGND	Analog GND
	4	AGND	Analog GND
CN406	1	THP	Pass through
	2	TXB	Pass through
	3	14D	13.8V
	4	8D	Digital 8V
	5	14D	13.8V
	6	8A	Analog 8V
	7	GND	GND
	8	GND	GND
	9	14S	13.8V
	10	14S	13.8V
	11	14S	13.8V
	12	PSW	Power switch on : "H"
	13	14V	13.8V
CN407	1	14S	13.8V
	2	AGND	Analog GND
	3	TT	Pass through
	4	TS	Pass through
	5	GND	GND
CN410	Coaxial	LO3	Local LO3 8.375MHz (From PLL)
CN411	1	TIF	TX IF input
	2	GND	GND
	3	RIF	RX IF output
	4	GND	GND
CN412	Coaxial	TR88	8.83MHz
CN413	1	TXB	TX power 8V
	2	RXB	RX power 8V
	3	AGC	AGC line
FINAL UNIT (X45-351X-XX) (D/5) : AVR			
CN601	1	14V	13.8V
	2	14V	13.8V
	3	GND	GND
CN602	1	14S	13.8V
	2	14S	13.8V
	3	AGND	Analog GND
	4	AGND	Analog GND
CN603	1	THP	Thermal protection on : "H"
	2	TXB	TX 13.8V
	3	14D	13.8V
	4	8D	Digital 8V
	5	14D	Digital 13.8V
	6	8A	Analog 8V
	7	GND	GND
	8	GND	GND
	9	14S	13.8V
	10	14S	13.8V

AT coil tap band data

TERMINAL FUNCTION

CN No.	Pin No.	Name	Function
	11	14S	13.8V
	12	PSW	Power switch on : "H"
	13	14V	13.8V
CN604	1	14S	13.8V
	2	14S	13.8V
	3	TXB	TX 13.8V
	4	GND	GND
	5	GND	GND
CN605	1	MOT+	Moter drive +
	2	MOT –	Motor drive –
FINAL UNIT (X45-351X-XX) (E/5) : RELAY			
CN301	1	RL	TX/RX select signal input
	2	ANTS	ANT 1/2 select signal input
	3	GND	GND
CN302	Coaxial	ATO	TX signal input (From FILTER)
CN303	Coaxial	RAT	RX signal output (To RF)
CN304	Coaxial	AT1	Input/output to AT (RX : Output, TX : Input)
CN305	Coaxial	AT2	Input/output to AT (RX : Input, TX : Output)
CN306	TP		ANT1 GND
CN307	TP		ANT2 GND
W301	TP		ANT1 signal line
W303	TP		ANT2 signal line
AT UNIT (X53-3340-02)			
CN1	Coaxial	AT1	AT input
CN2	Coaxial	AT2	AT output
CN3	1	VRE	+5V reference voltage for A/D
	2	POD2	VC2 position detection, VR101 output
	3	GND	GND
	4	POD1	VC1 position detection, VR102 output
CN4	1	NC	
	2	M2–	Motor 2 drive –
	3	M2+	Motor 2 drive +
	4	M1–	Motor 1 drive –
	5	M1+	Motor 1 drive +
CN5	1	NC	
	2	F15	Power line 11~14V
	3	GND	GND
CN6	1	ATA	Make for AT through/on relay "L" : On
	2	NC	
CN7	1	ATG	GND for discriminating that is connected to microcomputer
	2	SPED	Motor speed control pulse
	3	APRE	Control selection "H" : Preset type, "L" : Auto tuning type
	4	VRE	+5V reference voltage for A/D
	5	PR22	Motor 2 control signal
	6	PR21	Motor 2 control signal
	7	POD2	VC2 position detection
	8	PR12	Motor 1 control signal
	9	PR11	Motor 1 control signal
	10	POD1	VC1 position detection
	11	GND	GND
CN101	1	28AT	24.5~30MHz
	2	15AT	21.5~24.5MHz
	3	NC	
	4	18AT	18.5~21.5MHz
	5	14AT	14.5~18.5MHz
	6	10AT	10.5~14.5MHz
	7	7AT	4.0~7.5MHz
	8	4AT	2.5~4.0MHz

AT coil tap band data

CN No.	Pin No.	Name	Function
	9	GND	GND
CONTROL UNIT (X53-356X-XX) (A/4) : CONTROL			
CN1	1	GND	GND
	2	NFMT	Not FM TX signal
	3	VB3	VCO selest signal
	4	VB2	VCO select signal
	5	VB1	VCO select signal
	6	VB0	VCO select signal
	7	UNL	PLL unlock signal
	8	GND	GND
	9	PLE2	PLL2 enable signal
	10	PLE1	PLL1 enable signal
	11	PCK	PLL serial clock
	12	PDA	PLL serial data
	13	14D	Digital 13.8V
	14	DLE3	DDS3 enable signal
	15	DLE2	DDS2 enable signal
	16	DLE1	DDS1 enable signal
	17	TXC	TX control signal
	18	GND	GND
	19	9P	PLL power 9V (Pass through)
	20	5P	PLL power 5V (Pass through)
CN2	1	GND	GND
	2	–6	–6V (Pass through)
	3	5P	PLL power 5V (Pass through)
	4	9P	PLL power 9V (Pass through)
	5	PSW	Power control signal
	6	14V	13.8V
	7	14V	13.8V
	8	14D	Digital 13.8V
	9	14D	Digital 13.8V
	10	THP	Thermal protection
	11	VSR	Reflected wave analog voltage
	12	VSF	Forward wave analog voltage
	13	ENF1	Enable for IC1 on FILTER board
	14	UDA2	Serial data for IC1 on FILTER board
	15	UCK2	Serial clock for IC1 on FILTER board
	16	TS	AT-300 control signal
	17	TT	AT-300 control signal
	18	6K	6kHz filter select signal
	19	3K	3kHz filter select signal
	20	15K	15kHz filter select signal
CN3	1	5D	Digital 5V
	2	MENA	Main encoder pulse A
	3	MENB	Main encoder pulse B
	4	DGND	Digital GND
CN4	1	NC	
	2	NC	
	3	SPED	Internal AT speed control signal
	4	APRE	Internal AT control select signal
	5	VRE	Reference voltage for A/D convertor
	6	PR22	Motor 2 control signal
	7	PR21	Motor 2 control signal
	8	POD2	Motor 2 position voltage
	9	PR12	Motor 1 control signal
	10	PR11	Motor 1 control signal
	11	POD1	Motor 1 position voltage
	12	GND	GND
CN5	1	GND	GND
	2	CTS	Communication inhibit signal from TS-870S
	3	RTS	Communication inhibit signal from personal computer
	4	RXD	TX data from TS-870S
	5	TXD	RX data from personal computer

TERMINAL FUNCTION

CN No.	Pin No.	Name	Function
	6	KEYS	Key jack sensing signal
	7	DASH	Electronic keyer dash signal
	8	DOT	Electronic keyer dot signal
	9	GND	GND
	10	H0	DSP control data bus
	11	H1	DSP control data bus
	12	H2	DSP control data bus
	13	H3	DSP control data bus
	14	H4	DSP control data bus
	15	H5	DSP control data bus
	16	H6	DSP control data bus
	17	H7	DSP control data bus
	18	HENA	DSP A enable signal
	19	HENB	DSP B enable signal
	20	HRW	DSP read/write control signal
CN6	1	GND	GND
	2	HA0	DSP control address bus
	3	HA1	DSP control address bus
	4	HA2	DSP control address bus
	5	GND	GND
	6	BEEP	Beep control signal
	7	MD	Microphone down signal
	8	MU	Microphone up signal
	9	SS	Standby switch
	10	GND	GND
	11	KEY	Key down signal
	12	DRST	DSP reset signal
	13	CKY	TX wave control signal
	14	RXC	RX control signal
	15	TXC	TX control signal
	16	AMUT	AF mute signal
	17	VCEN	TX-RX unit IC26 enable
	18	UCK2	TX-RX unit serial clock
	19	UDA2	TX-RX unit serial data
	20	DREN	DRU-3 control enable signal
	21	PLUL	TX-RX unit PLL unlock signal
	22	PLEN	TX-RX unit PLL control enable signal
	23	EOM	DRU-3 end of message
	24	VBSY	VS-2 busy signal
	25	STR	VS-2 synthesize control signal
	26	GND	GND
CN7	1	5D	Digital 5V
	2	VAGC	AGC VR analog voltage
	3	VKEY	KEY VR analog voltage
	4	VPRC	PROC VR analog voltage
	5	VMON	MONI VR analog voltage
	6	DGND	Digital GND
	7	NC	
	8	5D	Digital 5V
	9	VCAR	CAR VR analog voltage
	10	VDLY	DELAY VR analog voltage
	11	VMIC	MIC VR analog voltage
	12	VPWR	PWR VR analog voltage
	13	DGND	Digital GND
CN8	1	5D	Digital 5V
	2	14D	Digital 13.8V
	3	14D	Digital 13.8V
	4	ENL2	LCD driver control enable signal
	5	ENL3	LCD driver control enable signal
	6	UDA1	LCD driver control serial data
	7	UCK1	LCD driver control serial clock
	8	BLANK	LCD goes off control signal
	9	DIM	LCD dimmer control signal
	10	GND	GND

CN No.	Pin No.	Name	Function
CN9	1	BLNK	LED goes off control signal
	2	K0	Key input 0
	3	K1	Key input 1
	4	K2	Key input 2
	5	K3	Key input 3
	6	K4	Key input 4
	7	K5	Key input 5
	8	K6	key input 6
	9	K7	Key input 7
	10	PSW	Power switch input signal
	11	ENL4	Enable for IC501 on SW board
	12	ENL1	Enable for IC502~504 on SW board
	13	UDA1	Serial data for SW board
	14	UCK1	Serial clock for SW board
	15	LATC	AT tune LED control signal
	16	TXC	TX control signal (TX LED control)
	17	RES	IC501~504 reset signal
	18	5V	5V
	19	5D	Digital 5V
	20	DGND	Digital GND
CN10	1	NC	
	2	WENB	Width encoder pulse B
	3	WEBA	Width encoder pulse A
	4	SENB	Shift encoder pulse B
	5	SENA	Shift encoder pulse A
	6	GND	GND
	7	NC	
	8	5D	Digital 5V
	9	RENB	RIT encoder pulse B
	10	RENA	RIT encoder pulse A
	11	VAF	AF VR analog voltage
	12	VRF	RF VR analog voltage
	13	GND	GND
	14	NC	
	15	5D	Digital 5V
	16	CENB	Click encoder pulse B
	17	CENA	Click encoder pulse A
	18	VNB	NB VR analog voltage
	19	VSQL	SQL VR analog voltage
	20	GND	GND
CN11	1	NC	
	2	SS	Standby switch
	3	NC	
	4	GND	GND
	5	–6	–6V
	6	RBK	RF mute signal
	7	NC	
	8	ENR3	Enable for IC7 on RF board
	9	ENR2	Enable for IC2 on RF board
	10	ENR1	Enable for IC1 on RF board
	11	UDA2	Serial data for RF board
	12	UCK2	Serial clock for RF board
	13	NC	
	14	THP	Thermal protection
	15	ALM	ALC meter analog voltage
	16	VSR	Reflected wave analog voltage
	17	VSF	Forward wave analog voltage
	18	6K	6kHz filter select signal
	19	3K	3kHz filter select signal
	20	15K	15kHz filter select signal

CONTROL UNIT (X53-356X-XX) (B/4) : SW

CN501	1	DGND	Digital GND
	2	5D	Digital 5V

TERMINAL FUNCTION

CN No.	Pin No.	Name	Function
	3	5V	5V
	4	RES	IC501~504 reset signal
	5	TXC	TX control signal (TX LED control)
	6	LATC	AT tune LED control signal
	7	UCK1	Serial clock
	8	UDA1	Serial data
	9	ENL1	IC502~504 enable
	10	ENL4	IC501 enalbe
	11	PSW	Power switch output signal
	12	K7	Key output 7
	13	K6	Key output 6
	14	K5	Key output 5
	15	K4	Key output 4
	16	K3	Key output 3
	17	K2	Key output 2
	18	K1	Key output 1
	19	K0	Key output 0
	20	BLNK	LED goes off control signal
CONTROL UNIT (X53-356X-XX) (D/4) : MIC			
CN902	1	SS	Standby switch
	2	MD	Microphone down signal
	3	MU	Microphone up signal
	4	8M	8V for microphone
	5	MCG	GND
	6	MSG	MIC GND
	7	MIC	Microphone signal output
TX-RX UNIT (X57-4620-00)			
CN1	1	TIF	TX IF output (455kHz)
	2	GND	TIF GND
	3	RIF	RX IF input (455kHz)
	4	GND	RIF GND
CN3	1	LO4	Local 4 input (466kHz)
	2	GND	LO4 GND
	3	FMD	FM modulation output (To PLL)
	4	GND	FMD GND
CN4	1	MIC	Microphone signal input
	2	MSG	MIC GND
	3	MCG	GND
	4	SS	Microphone standby switch
	5	MU	Microphone up
	6	MD	Microphone down
	7	8M	8V for microphone
CN5	1	GND	GND
	2	DRMG	MIC GND
	3	DRM	Microphone signal output
	4	DRO	DRU-3 playback signal input
	5	5D	Digital 5V for DRU-3
	6	GND	GND
	7	EOM	End of message (End : "H")
	8	OVF	Over flow signal (Over flow : "L")
	9	DREN	DRU-3 enable
	10	SD	DRU-3 serial data
	11	SCK	DRU-3 clock
CN6	1	VO	Audio signal
	2	GND	GND
	3	SD	VS-2 control data
	4	SCK	VS-2 control data clock
	5	BSY	VS-2 busy
	6	STR	VS-2 synthesize control
	7	5C	5V for VS-2
	8	GND	GND
CN7	1	GND	GND

CN No.	Pin No.	Name	Function
	2	HA0	DSP data address
	3	HA1	DSP data address
	4	HA2	DSP data address
	5	GND	GND
	6	BEEP	Beep control signal
	7	MD	Microphone down signal
	8	MU	Microphone up signal
	9	SS	Standby switch
	10	GND	GND
	11	KEY	Key down signal
	12	DRST	DSP reset signal
	13	CKY	TX wave control signal
	14	RXC	RX control signal
	15	TXC	TX control signal
	16	AMUT	AF mute signal
	17	VCEN	IC26 enable
	18	UCK2	Serial clock for TX-RX unit
	19	UDA2	Serial data for TX-RX unit
	20	DREN	DRU-3 enable
	21	PLUL	TX-RX unit PLL unlock signal output
	22	PLEN	TX-RX unit PLL enable
	23	EOM	DRU-3 end of message signal output
	24	VBSY	VS-2 busy signal
	25	STR	VS-2 synthesize control signal
	26	GND	GND
CN8	1	GND	GND
	2	CTS	TX inhibit signal from TS-870S
	3	RTS	TX inhibit signal from personal computer
	4	RXD	TX data from TS-870S
	5	TXD	RX data from personal computer
	6	KEYS	Key jack sensing signal
	7	DASH	Electronic keyer dash signal
	8	DOT	Electronic keyer dot signal
	9	GND	GND
	10	H0	DSP data bus
	11	H1	DSP data bus
	12	H2	DSP data bus
	13	H3	DSP data bus
	14	H4	DSP data bus
	15	H5	DSP data bus
	16	H6	DSP data bus
	17	H7	DSP data bus
	18	HENA	DSP A enable signal
	19	HENB	DSP B enable signal
	20	HRW	DSP read/write control signal
CN9	1	14A	Analog 13.8V
	2	8D	Digital 8V
	3	14S	13.8V
	4	8A	Analog 8V
	5	APG	GND
CN10	1	SPI1	AF input when headphone through
	2	SPG	GND
	3	SPO1	Headphone AF output
CN11	1	GND	GND
	2	14S	13.8V
	3	8A	Analog 8V
	4	RXC	RX : "L"
	5	TXC	TX : "H"
	6	AGC	AGC voltage
	7	CKY	Keying signal
	8	SPO1	Speaker signal output
CN12	1	SPO3	Internal speaker AF output
	2	SPG	GND

TERMINAL FUNCTION

CN No.	Pin No.	Name	Function
CN13	Coaxial	REF	20MHz reference signal for PLL, DPS (From PLL)
J1	1	GND	GND
EXT.SP	2	NC	
	3	NC	
	4		External speaker signal output
	5		Signal input when external speaker not connected
J2	1	GND	GND
Paddle	2	NC	
	3	NC	
	4	NC	
	5	DASH	Electronic keyer dash signal
	6	DOT	Electronic keyer dot signal
	7	NC	
	8	NC	
	9	NC	
	10	KEYS	Key switch signal
	11	KEYS	Open when using paddle
J4	1		GND
RTTY	2		RTTY signal
	3		GND
	4		RTTY signal
J5	1	NC	
ACC2	2	NC	
	3	ANO	RX audio output
	4	GND	ANO GND
	5	PSQ	Squelch open : GND, Squelch close : open
	6	SMET	S-meter voltage output
	7	NC	
	8	GND	GND
	9	PKS	Standby switch when using PKD input (Front panel microphone input is muted)
	10	NC	
	11	PKD	TX input
	12	GND	PKD GND
	13	SS	Standby switch

CN No.	Pin No.	Name	Function
J6	1	GND	GND
KEY	2	GND	GND
	3	KEYS	Key jack sensing signal
	4	NC	
	5	KEY	Key down signal
J7	1	GND	GND
COM	2	NC	
	3	TXD	RX data from personal computer
	4	RXD	TX data from TS-870S
	5	NC	
	6	NC	
	7	CTS	TX inhibit signal from TS-870S
	8	RTS	TX inhibit signal from personal computer
	9	NC	
LCD ASSY (B38-0736-05)			
CN1	1	GND	GND
	2	DIM	LCD dimmer control signal
	3	BLANK	LCD goes off control signal
	4	UCK1	LCD driver control serial clock
	5	UDA1	LCD driver control serial data
	6	ENL3	LCD driver control enable signal
	7	ENL2	LCD driver control enable signal
	8	14D	Digital 13.8V
	9	14D	Digital 13.8V
	10	5D	Digital 5V

TS-870S PC BOARD VIEWS

LCD ASSY (B38-0736-05)
Component side view

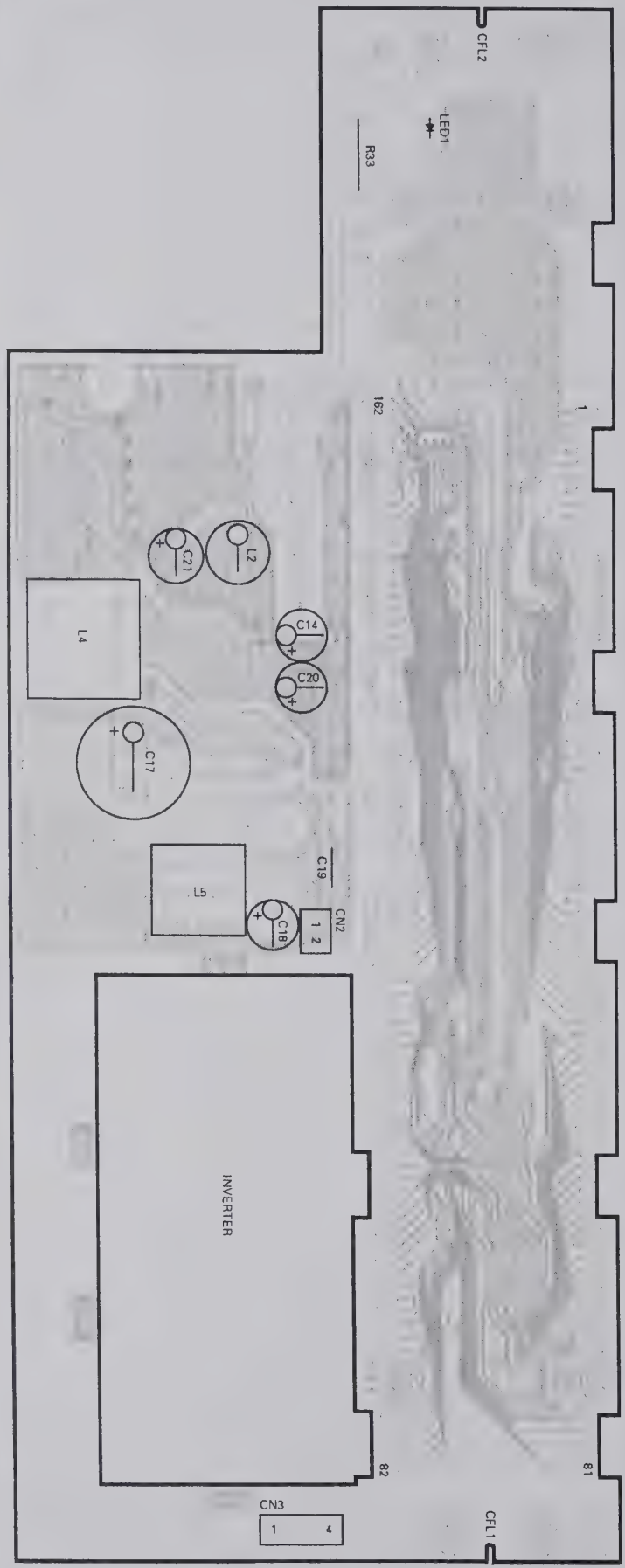

LCD ASSY (B38-0736-05)
Foil side view

RF UNIT (X44-3210-00) (C/9)
Component side view

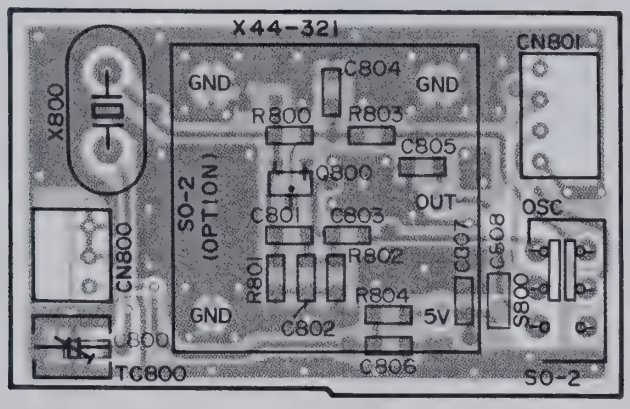

RF UNIT (X44-3210-00) (C/9)
Foil side view

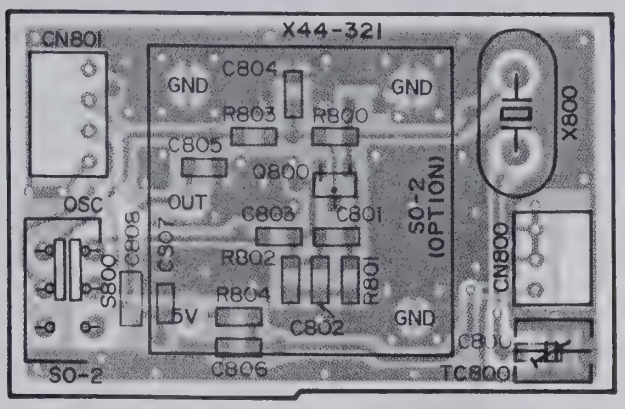

Component side
Foil side

VCO2 (X58-3390-03)
Component side view

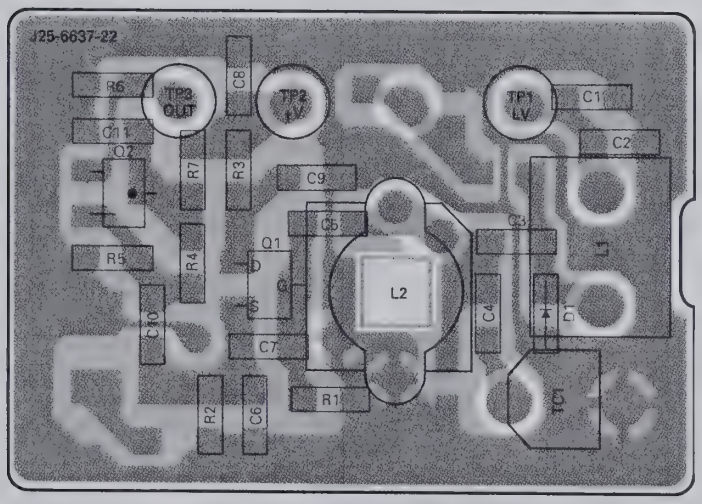

VCO2 (X58-3390-03)
Foil side view

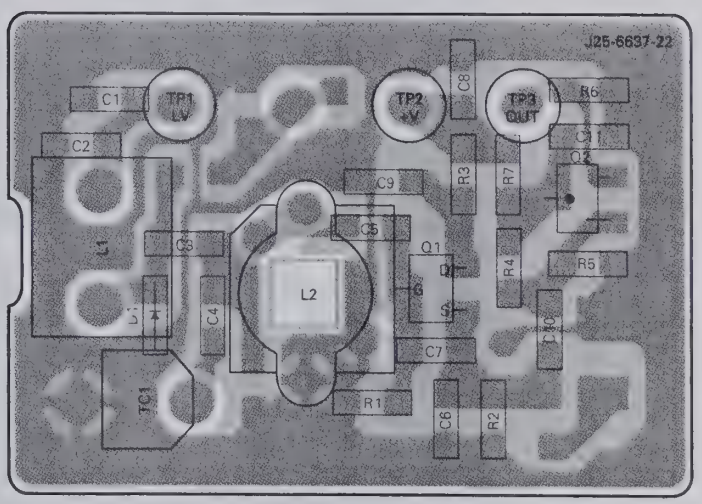

FINAL UNIT (X45-351X-XX) (A/5) : FINAL

Component side view

0-00 : K,P,M,M2,X

2-71 : E,E2,E3,E9

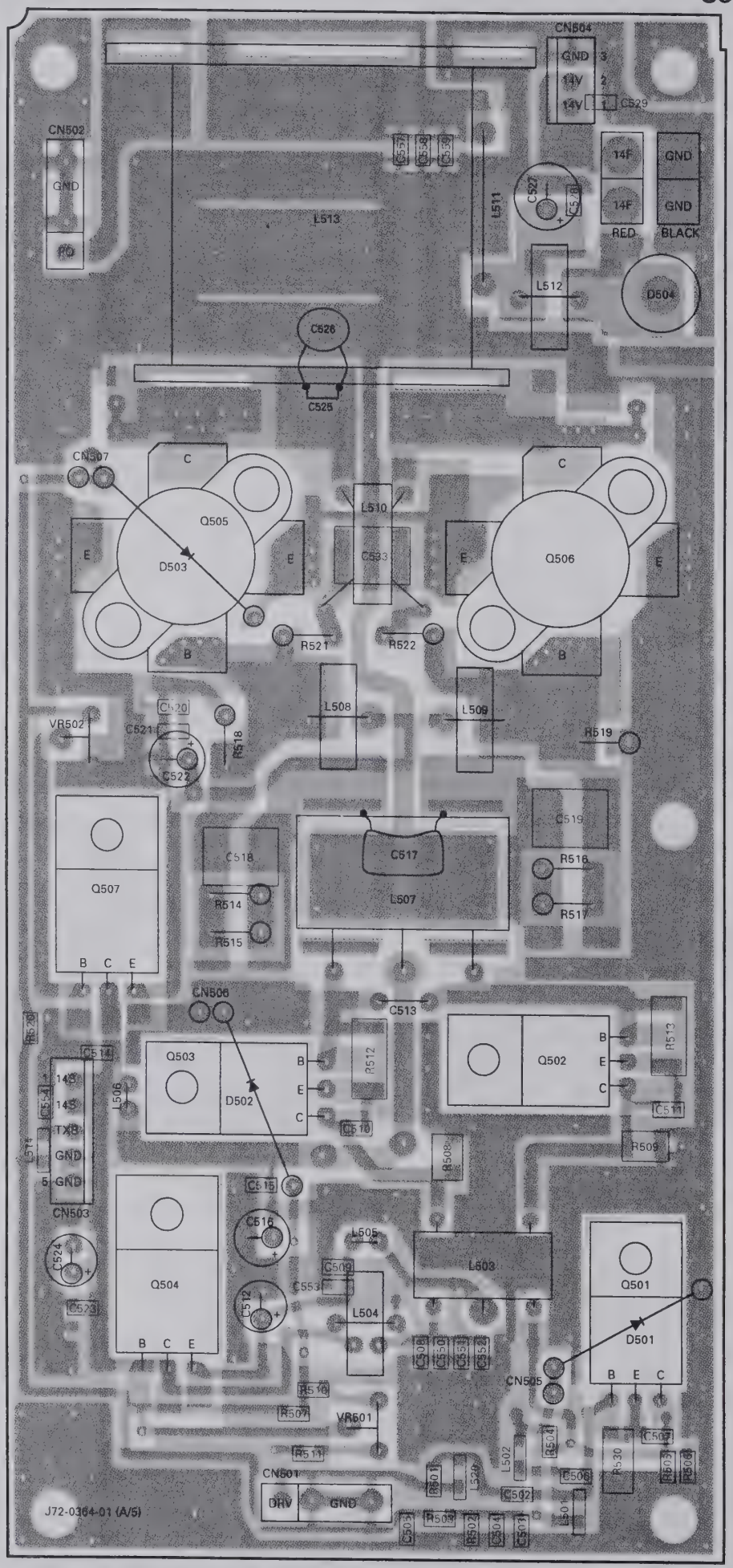

Component side

Foil side

FINAL UNIT (X45-351X-XX) (A/5) : FINAL

Foil side view

0-00 : K,P,M,M2,X

2-71 : E,E2,E3,E9

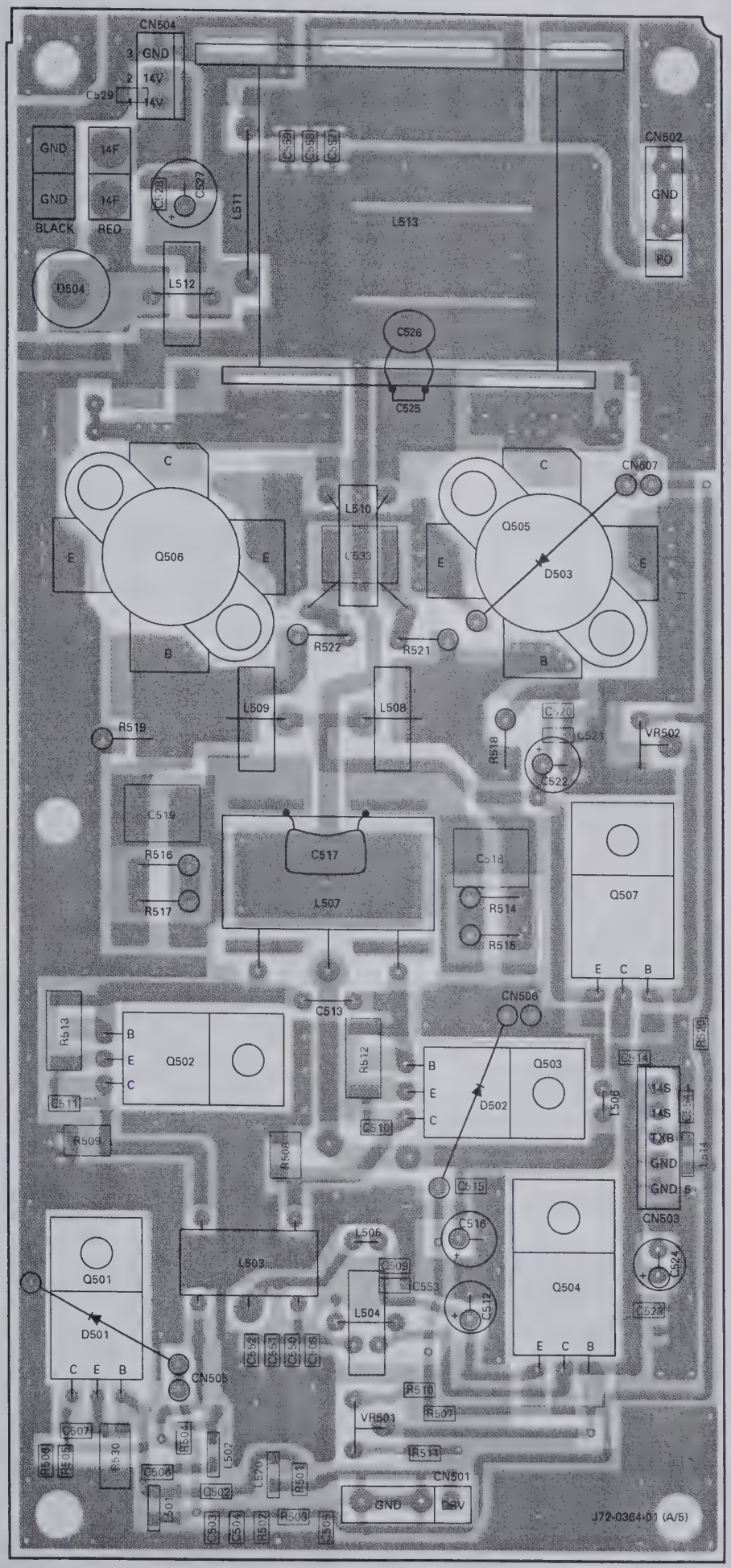

Component side

Foil side

TS-870S PC BOARD VIEW

FINAL UNIT (X45-351X-XX) (B/5) : FILTER

Component side

Foil side

Component side view 0-00 : K,P,M,M2,X 2-71 : E,E2,E3,E9

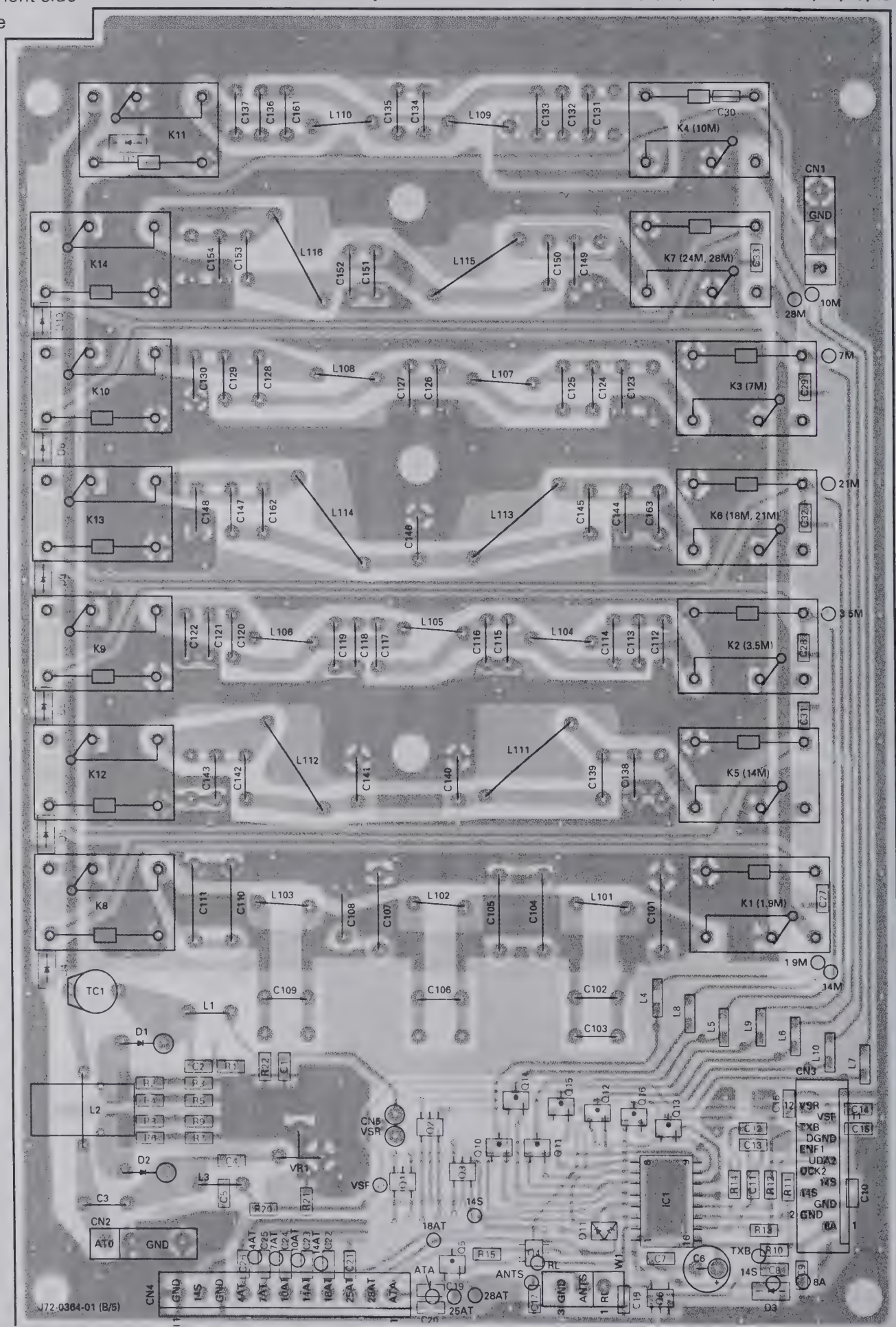

FINAL UNIT (X45-351X-XX) (B/5) : FILTER

Foil side view 0-00 : K,P,M,M2,X 2-71 : E,E2,E3,E9

Component side
Foil side

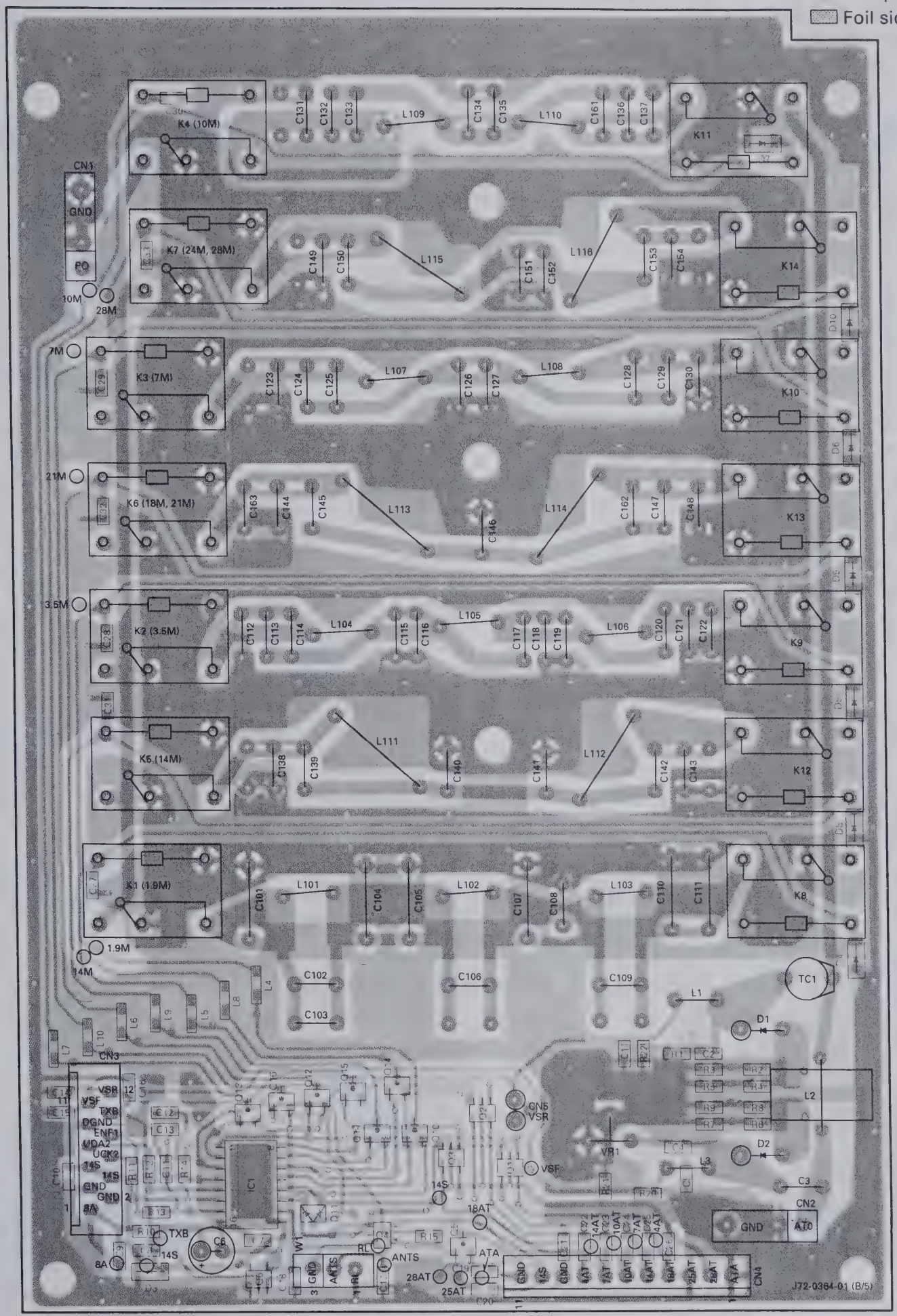

TS-870S PC BOARD VIEWS

FINAL UNIT
(X45-351X-XX) (D/5) : AVR
Component side view
0-00 : K,P,M,M2,X
2-71 : E,E2,E3,E9

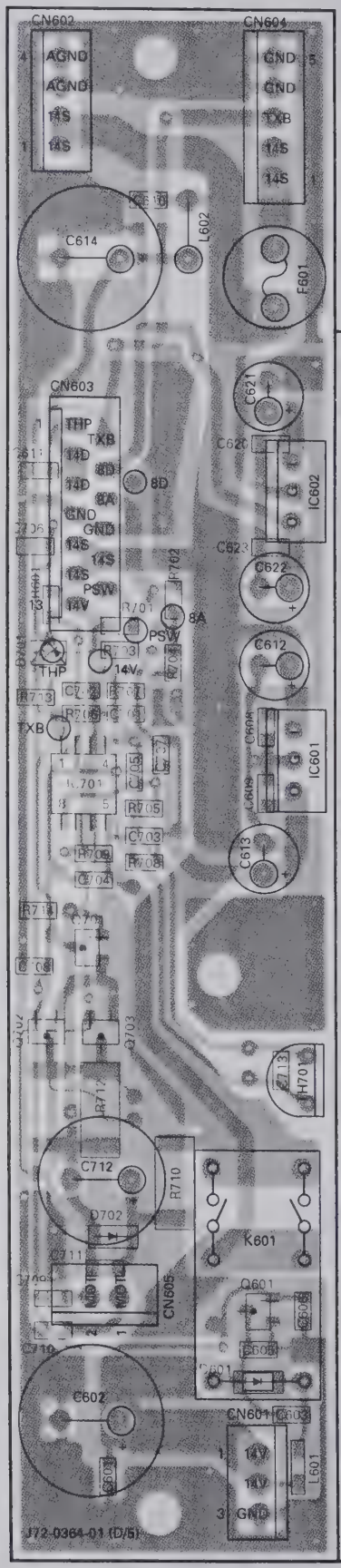

FINAL UNIT
(X45-351X-XX) (E/5)
: RELAY
Component side view
0-00 : K,P,M,M2,X
2-71 : E,E2,E3,E9

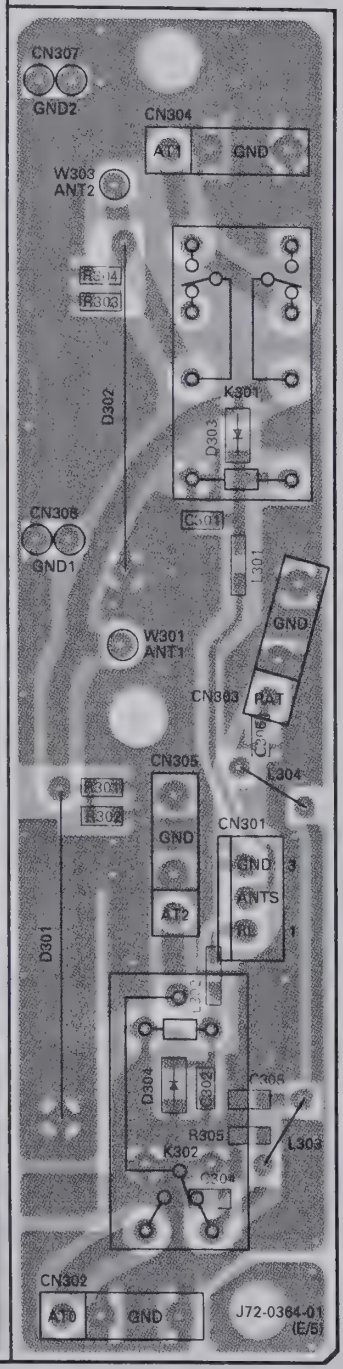

FINAL UNIT
(X45-351X-XX) (E/5)
: RELAY
Foil side view
0-00 : K,P,M,M2,X
2-71 : E,E2,E3,E9

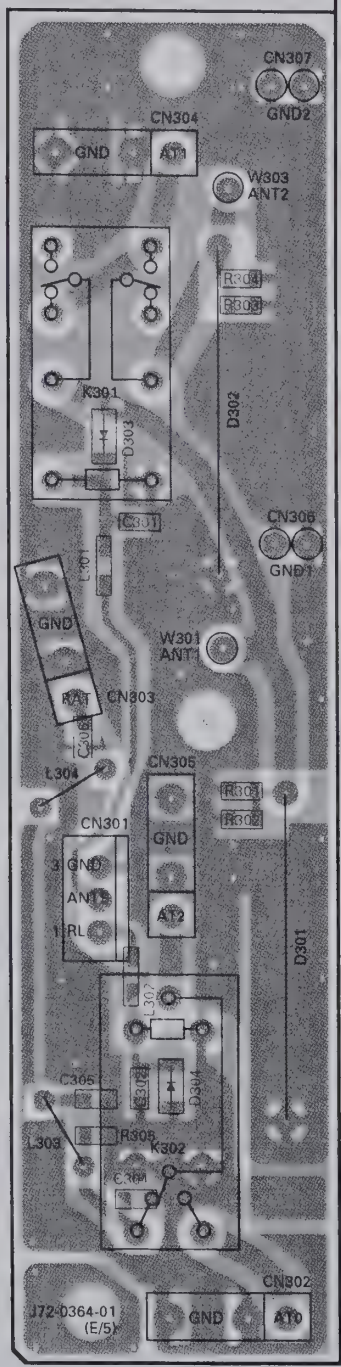

FINAL UNIT
(X45-351X-XX) (D/5) : AVR
Foil side view
0-00 : K,P,M,M2,X
2-71 : E,E2,E3,E9

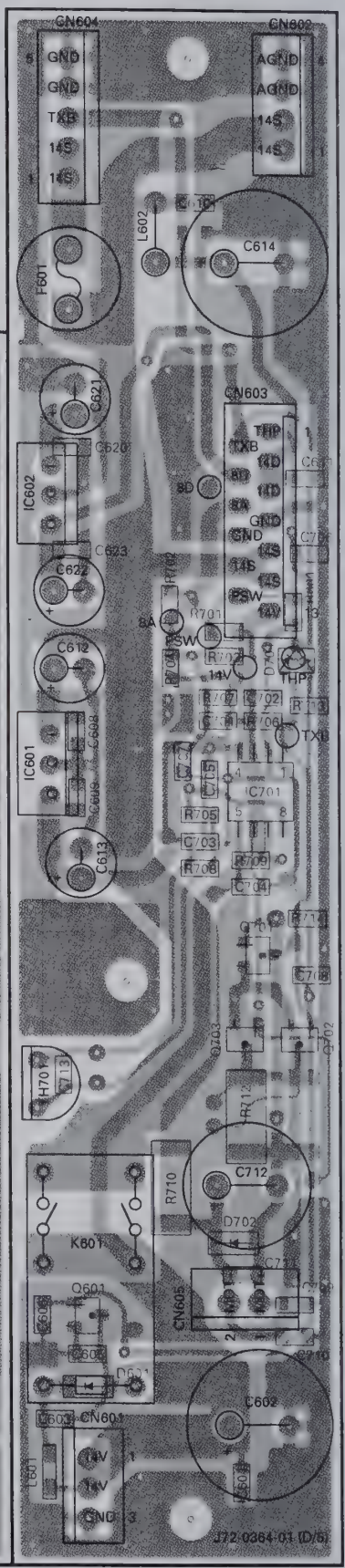

Component side
Foil side

TS-870S PC BOARD VIEWS

CONTROL UNIT (X53-356X-XX) (D/4) : MIC
Component side view
0-11 : K,P 0-21 : M 0-22 : M2 0-71 : X
2-71 : E 2-72 : E2 2-73 : E3 2-74 : E9

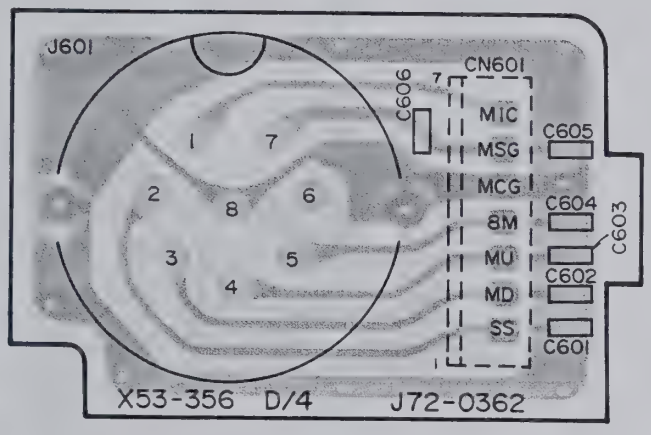

CONTROL UNIT (X53-356X-XX) (D/4) : MIC
Foil side view
0-11 : K,P 0-21 : M 0-22 : M2 0-71 : X
2-71 : E 2-72 : E2 2-73 : E3 2-74 : E9

Component side
Foil side

PC BOARD VIEW TS-870S

FINAL UNIT (X45-351X-XX) (C/5)
: CONNECTION Foil side view

0-00 : K,P,M,M2,X
2-71 : E,E2,E3,E9

2SA1162
2SC2712

2SD1406

2SD1624

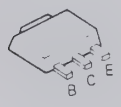

3SK131

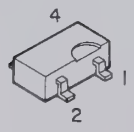

UPC7805H

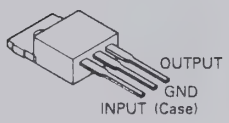

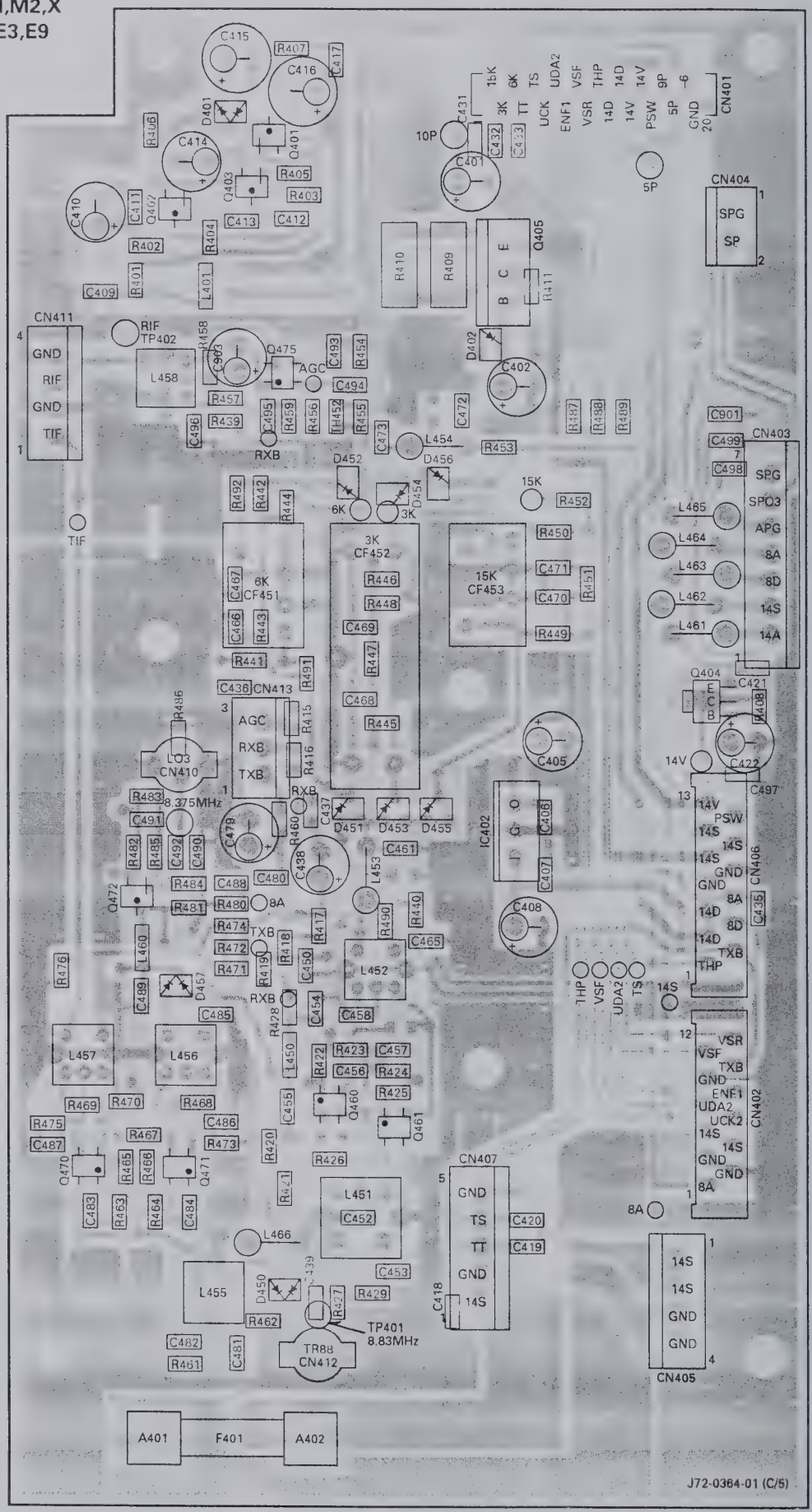

Component side
Foil side

DRU-3 (DIGITAL RECORDING UNIT)

DRU-3 Circuit Diagram

X43-3090-20

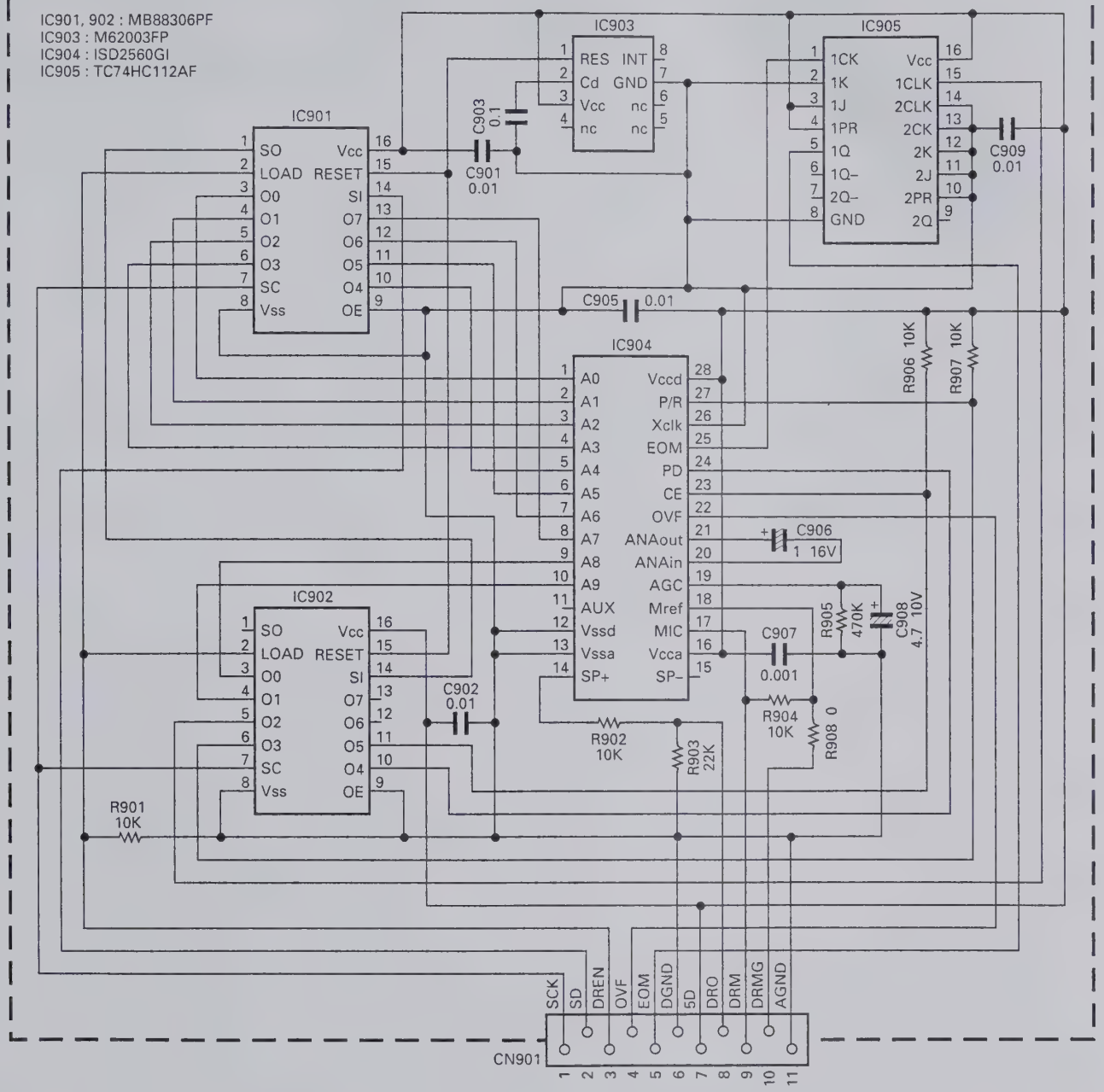

PG-2Z (DC CABLE)

PG-2Z External View

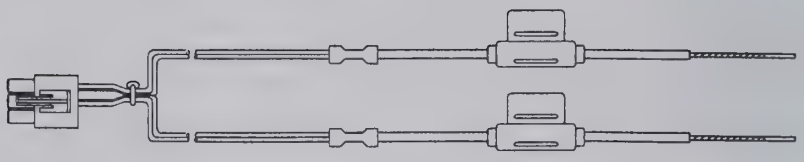

PG-2Z Parts List

Parts No.	New parts	Description
E30-3157-15		DC cable assy
F05-2531-05		Fuse (25A/32V)

SPECIFICATIONS

	Item			Rating
GENERAL	Mode			J3E (LSB, USB), A1A (CW), A3E (AM), F3E (FM), F1D (FSK)
	Number of memory channels			100
	Antenna impedance			50Ω (With Antenna Tuner 20 to 150Ω)
	Supply voltage			DC 13.8V ± 15%
	Grounding method			Negative ground
	Current	Transmit (Max.)		20.5A
		Receive (No signal)		2A
	Usable temperature range			–10°C to +50°C (+14°F to +122°F)
	Frequency stability (–10°C to +50°C)			Within ±10PPM
	Frequency accuracy (At room temperature)			Within ±10PPM
	Dimensions [W x H x D] (Projections included)			330 x 120 x 334 mm/13.0 x 4.72 x 13.1 in (339 x 135 x 375 mm/13.3 x 5.31 x 14.8 in)
	Weight			Approx. 11.5kg (25lbs)
TRANSMITTER	Frequency range	160m band		1.8*1 to 2.0*2MHz
		80m band		3.5 to 4.0*3MHz
		40m band		7.0 to 7.3*4MHz
		30m band		10.1 to 10.15MHz
		20m band		14.0 to 14.35MHz
		17m band		18.068 to 18.168MHz
		15m band		21.0 to 21.45MHz
		12m band		24.89 to 24.99MHz
		10m band		28.0 to 29.7MHz
	Output power*5	SSB, CW, FSK, FM	Max.	100W
			Min.	20W or less
		AM	Max.	25W
			Min.	20W or less
	Modulation	SSB		Balanced
		FM		Reactance
		AM		Low level
	Spurious emissions			–60dB or less
	Carrier suppression			50dB or more
	Unwanted sideband suppression (Modulation frequency 1.0kHz)			50dB or more
	Maximum frequency deviation (FM)	Wide		±5kHz or less
		Narrow		±2.5kHz or less
	Transmit frequency characteristics (–6dB) (TX lower cutoff : 300Hz, TX bandwidth : 2.3kHz)			300 to 2600Hz
	XIT shift frequency range			±9.99kHz
	Microphone imppedance			600Ω

*1 1.81MHz : Europe, France, Holland; 1.83MHz : Belgium, Spain

*2 1.85MHz : Belgium, France, Holland, Spain

*3 3.8MHz : Europe, Belgium, France, Holland, Spain

*4 7.1MHz : Europe, Belgium, France, Holland, Spain

*5 Belgium, Spain : 10W fixed on 160m band

TS-870S

SPECIFICATIONS

	Item			Rating
RECEIVER	Circuit type			Quadruple conversion superheterodyne
	Frequency range			100kHz to 30MHz
	Intermediate frequency			1st : 73.05MHz, 2nd : 8.83MHz, 3rd : 455kHz, 4th : 11.3kHz
	Sensitivity	SSB, CW, FSK (At 10dB (S+N)/N)	100kHz to 500kHz	1μV or less
			500kHz to 1.62MHz*6	4μV or less
			1.62MHz*6 to 24.5MHz	0.2μV or less
			24.5MHz to 30MHz	0.13μV or less
		AM (At 10dB (S+N)/N)	100kHz to 500kHz	2μV or less
			500kHz to 1.62MHz*6	31.6μV or less
			1.62MHz*6 to 24.5MHz	2μV or less
			24.5MHz to 30MHz	2μV or less
		FM (At 12dB SINAD)	28MHz to 30MHz	0.25μV or less
	Selectivity	SSB Lo : 300Hz, Hi : 2600Hz		–6dB : 2.3kHz, –60dB : 3.3kHz
		CW Width : 200Hz		–6dB : 200Hz, –60dB : 450Hz
		FSK Width : 500Hz		–6dB : 500Hz, –60dB : 1000Hz
		AM Lo : 100Hz, Hi : 4000Hz		–6dB : 9kHz, –60dB : 12kHz
		FM Width : 14kHz		–6dB : 14kHz, –60dB : 18kHz
	Image rejection (1.8MHz to 30MHz)			80dB or more
	1st IF rejection (1.8MHz to 30MHz)			80dB or more
	Notch filter atteneuation			40dB or more
	RIT shift frequency range			±9.99kHz
	Squelch sensitivity	SSB, CW, FSK, AM	100kHz to 500kHz	2μV or less
			500kHz to 1.62MHz*6	20μV or less
			1.62MHz*6 to 30MHz	2μV or less
		FM	28MHz to 30MHz	0.25μV or less
	Audio output (8Ω, 10% distortion)			1.5W or more
	Audio output impedance			8Ω

*6 1.705MHz : Canada, U.S.A.

Specifications are subject to change without notice or obligation due to ongoing technological developments.

KENWOOD CORPORATION
14-6, Dogenzaka 1-chome, Shibuya-ku, Tokyo 150, Japan

KENWOOD SERVICE CORPORATION
P.O. BOX 22745, 2201 East Dominguez Street, Long Beach, CA 90801-5745, U.S.A.

KENWOOD ELECTRONICS LATIN AMERICA S.A.
P.O. BOX 55-2791 Piso 6 Plaza Chase Cl. 47 y Aquilino de la Guardio Panama, Republic of Panama

KENWOOD ELECTRONICS CANADA INC.
6070 Kestrel Road, Mississauga, Ontario, Canada L5T 1S8

KENWOOD ELECTRONICS DEUTSCHLAND GMBH
Rembrücker Str. 15, 63150 Heusenstamm, Germany

KENWOOD ELECTRONICS BENELUX N.V.
Mechelsesteenweg 418 B-1930 Zaventem, Belgium

TRIO-KENWOOD FRANCE S.A.
13, Boulevard Ney, 75018 Paris, France

TRIO-KENWOOD U.K. LIMITED
KENWOOD House, Dwight Road, Watford, Herts., WD1 8EB United Kingdom

KENWOOD ELECTRONICS NEDERLAND B.V.
Amsterdamseweg 35, 1422 AC Uithoorn, The Netherlands

KENWOOD ELECTRONICS ITALIA S.p.A.
Via G. Sirtori, 7/9 20129 Milano, Italy

KENWOOD IBERICA S.A.
Bolivia, 239-08020 Barcelona, Spain

KENWOOD ELECTRONICS AUSTRALIA PTY. LTD.
(A.C.N. 001 499 074)
P.O. Box 504, 8 Figtree Drive, Australia Centre, Homebush, N.S.W. 2140, Australia

KENWOOD & LEE ELECTRONICS, LTD.
Unit 3712-3724, Level 37, Tower one Metroplaza, 223 Hing Fong Road, Kwai Fong, N.T., Hong Kong

HF TRANSCEIVER

TS-870S

SERVICE MANUAL

KENWOOD

© 1995-8 PRINTED IN JAPAN
B51-8296-00(N)1360

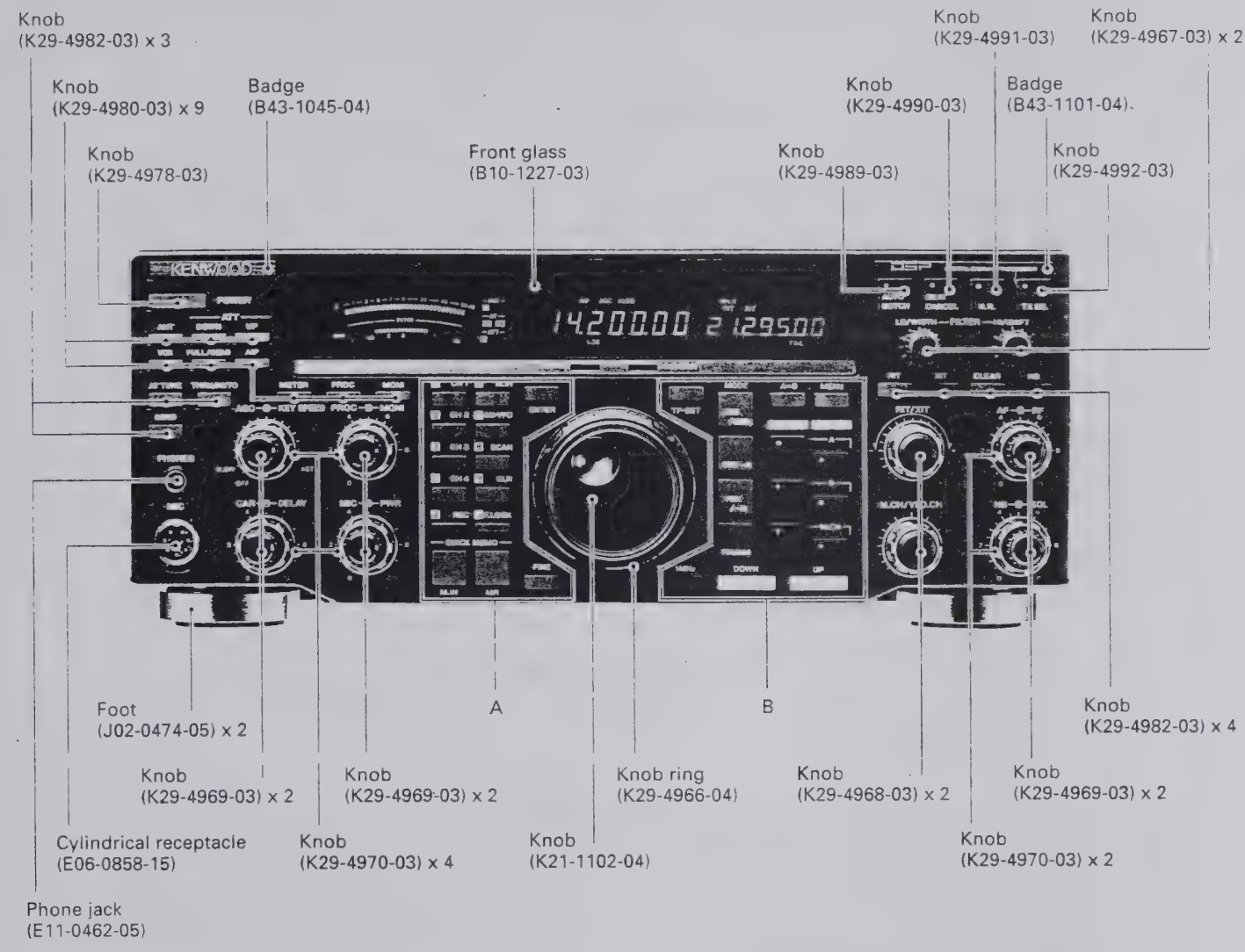

A

Knob (K29-4982-03)	Knob (K29-4982-03)	Knob (K29-4982-03)
Knob (K29-4982-03)	Knob (K29-4982-03)	
Knob (K29-4982-03)	Knob (K29-4982-03)	
Knob (K29-4982-03)	Knob (K29-4982-03)	
Knob (K29-4980-03)	Knob (K29-4980-03)	
Knob (K29-4984-03)	Knob (K29-4984-03)	Knob (K29-4982-03)

B

Knob (K29-4982-03)	Knob (K29-4985-03)	Knob (K29-4982-03)	Knob (K29-4982-03)
	Knob (K29-4986-03)	Knob (K29-4983-03)	Knob (K29-4981-03)
	Knob (29-4987-03)	Knob (K29-4983-03)	Knob (K29-4981-03)
	Knob (K29-4988-03)	Knob (K29-4983-03)	Knob (K29-4981-03)
Knob (K29-4982-03)	Knob (K29-4979-03)		Knob (K29-4979-03)

CONTENTS

CIRCUIT DESCRIPTION 3
DESCRIPTION OF COMPONENTS 45
SEMICONDUCTOR DATA 53
PARTS LIST 58
EXPLODED VIEW 81
PACKING 88
ADJUSTMENT 89
TERMINAL FUNCTION 104
CIRCUIT DIAGRAMS / PC BOARD VIEWS
- LCD ASSY (B38-0736-05) 110
- RF UNIT (X44-3210-00) (A/9) : RF 113
- RF UNIT (X44-3210-00) (B/9) : PLL 117
- RF UNIT (X44-3210-00) (C/9) 127
- VCO2 (X58-3390-03) 127
- FINAL UNIT (X45-351X-XX) (A/5) : FINAL 128
- FINAL UNIT (X45-351X-XX) (B/5) : FILTER 130
- FINAL UNIT (X45-351X-XX) (D/5) : AVR 132
- FINAL UNIT (X45-351X-XX) (E/5) : RELAY 132
- AT UNIT (X53-3340-02) (A/2) 137
- AT UNIT (X53-3340-02) (B/2) 139
- CONTROL UNIT (X53-356X-XX) (A/4) : CONTROL 143
- CONTROL UNIT (X53-356X-XX) (B/4) : SW 147
- TX-RX UNIT (X57-4620-00) 155
- RF UNIT (X44-3210-00) (D/9) 169
- RF UNIT (X44-3210-00) (E/9) 169
- RF UNIT (X44-3210-00) (F/9) 170
- RF UNIT (X44-3210-00) (G/9) 170
- RF UNIT (X44-3210-00) (H/9) 171
- RF UNIT (X44-3210-00) (I/9) 171
- FINAL UNIT (X45-351X-XX) (C/5) : CONNECTION 172
- CONTROL UNIT (X53-356X-XX) (D/4) : MIC 174

SCHEMATIC DIAGRAM 175
BLOCK DIAGRAM 179
LEVEL DIAGRAM 183
DRU-3 (DIGITAL RECORDING UNIT) 185
PG-2Z (DC CABLE) 188
SPECIFICATIONS 189

CIRCUIT DESCRIPTION

Frequency Configuration

The TS-870S is quadruple conversion in receive mode. As a transmitter, it is quadruple conversion in non-FM modes and double conversion in FM mode.

The fourth 11.3kHz IF signal is converted from analog to digital, connected to the DSP in receive mode, and decoded. In transmit mode, the microphone input signal is converted from analog to digital and applied to the DSP. It is converted from digital to analog, passed through a mixer, and becomes the 455kHz TIF signal. In FM mode, however, only 455kHz carriers are output from the DSP.

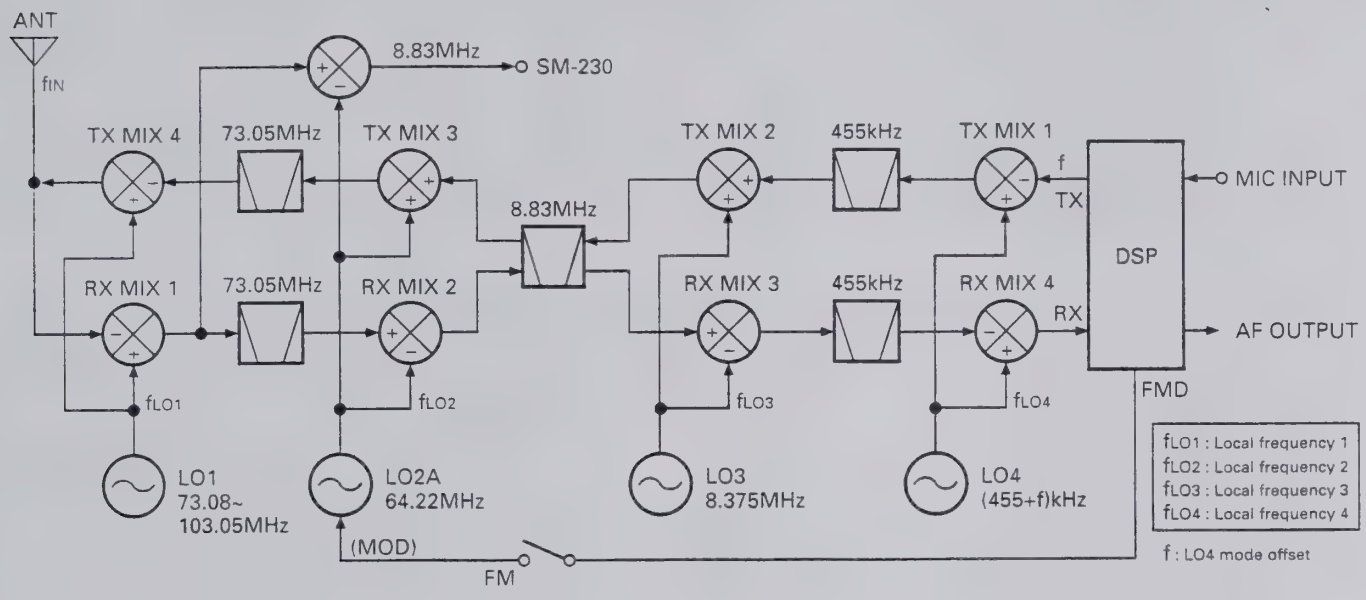

Fig. 1 Frequency configutation

■ Frequency configuration

When the receiver frequency by fIN from the antenna in SSB mode is zero beat (namely, at zero to the SSB signal with a carrier point of fIN), the relationship between these signals is expressed by the following equation.

$$f_{IN} = f_{LO1} - f_{LO2} - f_{LO3} - f_{LO4} + f \quad \ldots . (1)$$

Since all these frequencies are generated by the PLL or DDS circuits as shown in the PLL block diagram in Figure 2, the receiver frequency is determined only by the reference frequency fSTD, the PLL dividing ratio and DDS data. Therefore, the reference frequency accuracy equals the operating frequency accuracy.

The accuracy of the reference oscillator used in the TS-870S is 10ppm (–10 to +50°C). If the temperature-compensated crystal oscillator (TCXO) SO-2 is used, the accuracy becomes 0.5ppm (–10 to +50°C).

The TS-870S local oscillator and CAR DDS are independent of each other. However, they can be operated like a cancel loop configuration by changing the CAR and local oscillator PLL data simultaneously via a microprocessor. This function allows a shift (fLO1, fLO3, fLO4) by the mode change to be performed and the band width of the slope tune to be varied (fLO1, fLO3, fLO4).

When used as a transmitter in SSB mode or in other modes, likewise the frequency is determined by the reference frequency fSTD and dividing ratio. The display frequencies in the modes are listed in Table 1. In the FSK mode, the TS-870S displays the mark transmitter frequency.

In CW mode, the TS-870S receiving pitch can be changed to the required frequency in 50Hz steps with the desired signal remaining in the center of the IF filter band-pass (Variable CW pitch system). Since the receiving pitch varies along with the transmitter side tone, it is possible to zero-beat by receiving the desired signal at the same pitch as the side tone.

FM transmission is obtained in this system by modulating the f_{LO2} via application of the audio signal from the microphone to the VCO2.

Mode	Display frequency
USB, LSB	Carrier point frequency
CW	Transmission carrier frequency
FSK	Mark transmitter frequency
AM, FM	IF filter center frequency

Table 1 Display frequency in each mode

PLL Circuit

The TS-870S PLL circuit consists of a PLL loop that includes DDS covering a frequency range between 30kHz to 30MHz in 10Hz or 1Hz steps in accordance with the 20kHz reference frequency; DDS that generates other local oscillators (LO3, LO4); and a PLL loop that produces LO2A.

The dividing ratio data to each PLL loop and the DDS data are controlled by a microprocessor. Each loop is controlled by a single crystal frequency control system according to the reference frequency f_{STD}. (See the PLL block diagram in Figure 2.)

■ Reference signal generation circuit

The reference frequency f_{STD} used for frequency control is determined by the 20MHz crystal oscillator (X800 and Q800 : 2SC2714). One reference frequency is output as the reference signal f_{REF} for the PLL and DDS in the PLL section. The other is sent to the TX-RX unit and used as the PLL reference signal for the PLL and DSP.

The crystal oscillator may be replaced by an optional TCXO (SO-2), and the TCXO may be switched to with slide switch S800.

If the optional TCXO (SO-2) is installed, the S800 switch must be set to the SO-2 position.

■ LO2 (PLL section)

Q1 : 2SK508NV in VCO2 (A501 : X58-3390-03) generates 64.22MHz. The 20MHz reference frequency f_{REF} is applied to pin 15 of IC509 : MB86001PF, and is divided internally by a factor of 1000 (4000 in FM mode) to produce a 20kHz (5kHz in FM mode) comparison frequency.

The VCO2 output is applied to pin 6 of IC509 : MB86001PF, and is internally divided by a factor of 3211 (12844 in FM mode). It is compared with the 20kHz (5kHz in FM mode) signal using the phase comparator. The VCO2 frequency is locked. The division ratio is transmitted from the control unit.

The output from PLL2 is passed through buffer Q539, amplified by amplifier Q532, passed through a low-pass filter, its impedance is converted, and is then output to the RF section as LO2A.

■ LO1 (PLL loop)

Four VCOs and uses Q520 to Q523 : 2SK508NV x 4 to generate 73.08MHz to 103.05MHz. The 20MHz reference frequency f_{REF} is applied to pin 15 of PLL IC IC507 : MB86001PF, and is internally divided by a factor of 20 to produce a 1MHz comparison frequency. The output is passed through amplifier Q524, and a band-pass filter. One output is passed through buffer Q526 : 2SC2996 and a low-pass filter and goes to the RF section.

The other output signal is passed through buffer Q525 : 2SC2714 and applied to pin 5 of mixer IC508 : SN76514. A signal of 54.54 to 55.54MHz is input to pin 11 of IC508 and converted to a signal of 18.0 to 48.0MHz. This signal is output from pin 13. The signal is passed through a high-pass filter, a low-pass filter, and amplifier Q531 : 2SC2714 and Q530 : 2SC2712, and goes to pin 6 of PLL IC IC507 : MB86001PF.

This signal is internally divided by N, and compared with the 1MHz signal using the phase comparator. The mixer output frequency is locked in 1MHz steps. The division ratio N is transmitted from the control unit as data (N : 18 to 48) corresponding to 0MHz to 30MHz in 1MHz steps. One of the four VCOs is selected according to the VCO change signal (VB0 to VB3) sent from the control unit.

CIRCUIT DESCRIPTION

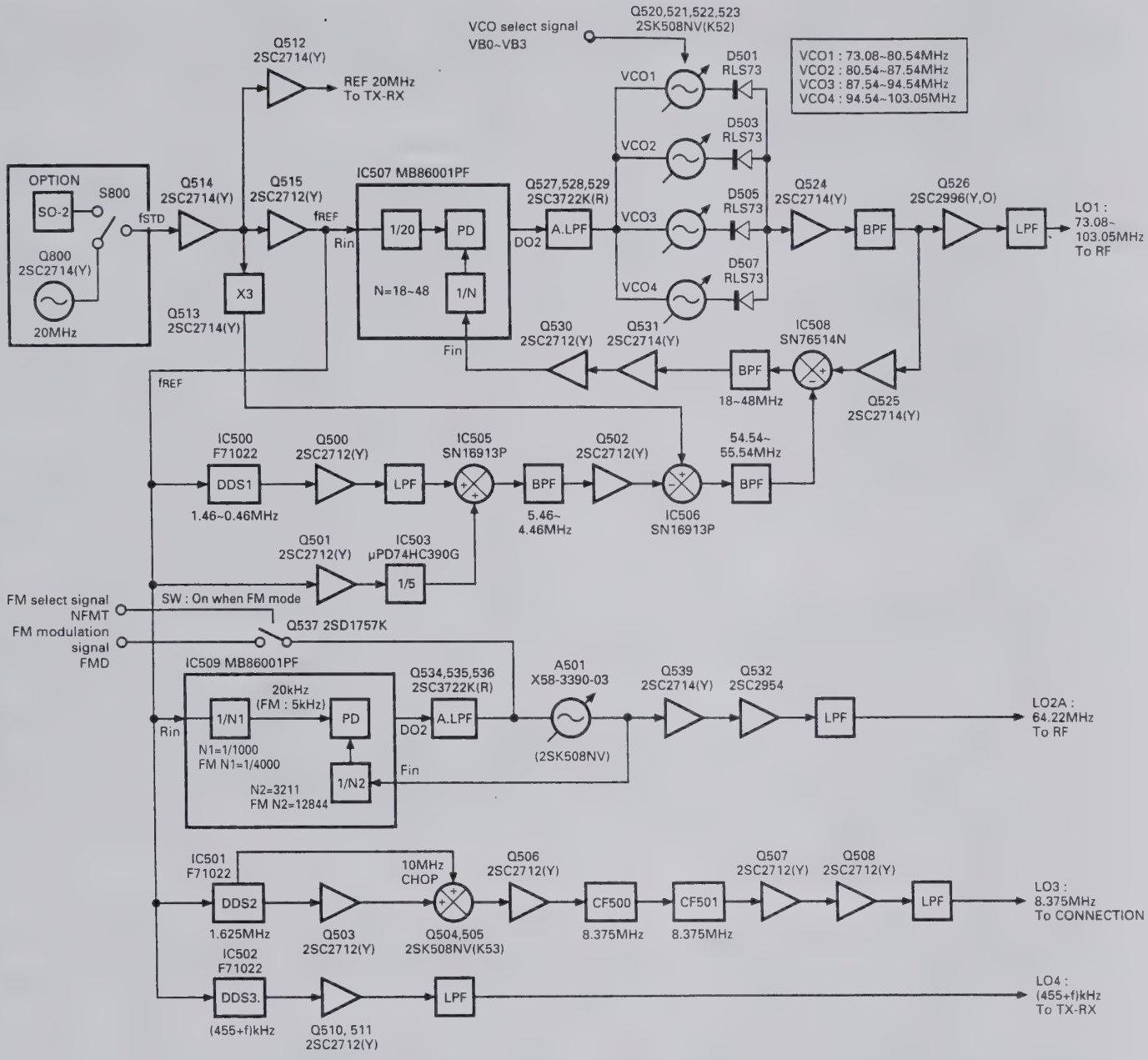

Fig. 2 PLL block diagram

CIRCUIT DESCRIPTION

DDS1 (IC500 : F71022) generates 1.46 to 0.46MHz digital signals. They are converted to analog signals by a digital to analog converter (consisting of CP500, CP501, and Q500), passed through a low-pass filter, and fed to pin 5 of mixer IC505 : SN16913P. The 4MHz signal produced by division of 20MHz reference frequency fREF by divider IC503 : UPD74HC390G by a factor of 5 is input to pin 2 of the mixer IC505, and a 5.46 to 4.46MHz signal is output from pin 1. The output signal is passed through a band-pass filter and buffer Q502, and input to pin 5 of mixer IC506 : SN16913P. The 60MHz signal obtained by tripling 20MHz reference frequency fREF via multiplying circuit Q515 is mixed, and a 54.54 to 55.54MHz signal is output. This signal is passed through a band-pass filter, and goes to pin 13 of mixer IC508.

DDS1 sweeps the 1.46 to 0.46MHz digital signal output in 10 or 1Hz steps, and LO1 covers the 73.08 to 103.05MHz signal in 10 or 1Hz steps and is output to the RF section.

■ LO3 generation

DDS2 (IC501 : F71022) generates a digital signal of the 1.625MHz basic frequency. It is converted to an analog signal by a digital-to-analog converter (consisting of CP502, CP503, and Q503), and chopped by a circuit consisting of Q503 to Q505 so as to extract an 8.375MHz primary harmonic component. Unwanted components are removed by a ceramic filter consisting of CF500 and CF501. The resulting signal is passed through amplifier Q507, buffer Q508, and a low-pass filter, and output to the connection section (final unit) as the LO3 signal.

■ LO4 generation

DDS3 (IC502 : F71022) generates a (455+f) kHz digital signal. It is converted to an analog signal by a digital to analog converter (consisting of CP504, CP505, and Q510), passed through buffer Q511 and a low-pass filter, and output to the TX-RX unit as the LO4 signal.

The LO4 signal is a local oscillator signal used to generate a DSP processing signal f from 455kHz. The f frequency is described in the local signal section (page 14).

■ Subtone generation

During FM transmission, the DSP generates a signal to which a subtone is added and is then sent to the main unit as it is.

■ PLL data

The TS-870S has three PLLs to which the main CPU sends PLL data based on the displayed frequency.

- PLL comprising a VFO (PLL section)
- Local oscillator PLL for frequency conversion (PLL section)
- PLL that generates timing clocks for digital signal processing (TX-RX unit)

The VCOs change with the following conditions.

- Main encoder change → VCO1 (PLL section)
- Mode change → VCO2 (PLL section)

Each PLL IC outputs an unlock signal. If any PLL is unlocked, the main display indicates ". . . . . " (dots). If the unlocked PLL is the TX-RX unit, the sub-display shows "Err-FD", and if it is the PLL unit, it shows "Err-FE" to indicate that it is unlocked.

The unlocking of each PLL is output to pin 11 (UL) of PLL IC : MB86001PF as unlock data (UNLOCK : LOW).

Loop	VCO No.	IC No.	Comparison frequency/divide ratio	Variable divide ratio	Frequency (MHz)
LO1	VCO1	IC507	1MHz/20	18~48	73.08~103.05
LO2	VCO2	IC509	20kHz/1000 5kHz/4000 : FM	3211 12844 : FM	64.22

CIRCUIT DESCRIPTION

■ DDS circuit configuration

The DDS IC has been developed with standard cells to implement a high-speed operation circuit and large-capacity ROM at a low cost.

1) IC configuration

The IC consists of the following components:

Two 28 bit registers for setting frequency data, one 28 bit frequency shift register for addition to the frequency register, a 23 bit parallel signal input section for frequency modulation with a parallel signal, and a data entry and selection section.

Frequency modulation section comprised of a 28 bit adder that adds frequency data and frequency modulation data

Phase data operation section that adds data from the frequency modulation section with the 28 bit phase data register

SIN-ROM that converts phase data to sine data.

2) Frequency/shift data setting

Using serial signals synchronized with clock pulses, a total of 30 bits (2 bits that specify the destination to which data are set and 28 bits for frequency data) are set in three internal registers.

3) Frequency register selection

The data set in the two frequency registers are selected by the SLAB input of the DDS IC. This pin handles the TXC signal. This function eliminates the need for the TS-870S microprocessor to set frequency data for each transmission and reception.

4) Frequency data selection

The SPSL input of the DDS IC selects whether to use the data in the internal frequency shift register or the data from parallel input as frequency modulation data.

5) Frequency modulation

The MDEN input of the DDS IC enables or disables frequency modulation. When frequency modulation is enabled, frequency data is added, and the result is input to the phase data operation section.

6) Phase data operation

The target frequency phase data is output by accumulating 28 bit frequency data in the 28 bit phase accumulator.

$Fout = Fs/2^{28} \cdot Dsum$

Fs : DDS IC input frequency/2

Dsum : Frequency data+Frequency modulation data

If 2^{25} is set for Dsum when 1/8 Fs is output, the phase data must be increased by $\pi/8$.

A 28 bit absolute value operation has been used here, but a 28 bit signed operation can also be used, assuming that the MSB is a sign. If complement data of 8000000 to FFFFFFFF (hex) is set, the phase moves in the negative direction for the positive data.

7) SIN-ROM

Phase data from the phase data operation section is converted to sine data of 0000 to FFFF (hex) in the 16 bit offset binary format.

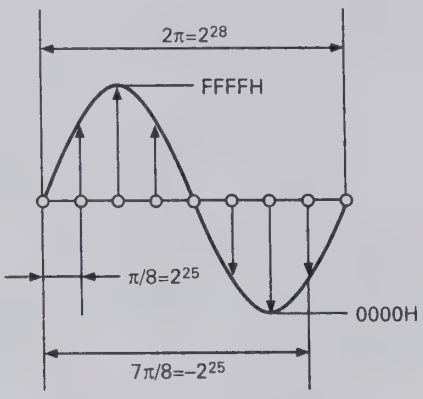

CIRCUIT DESCRIPTION

Receiver Circuit

The basic configuration of the receiver circuit is quadruple conversion. After the frequency is converted to the 11.3kHz fourth IF, the DSP carries out AGC, filtering, detection, and signal processing. Figure 3 is a receiver block diagram.

The signal coming from the antenna connector is passed through the antenna switching relay (K301) in the final unit (E/5 relay section), the antenna tuner unit, and the transmit/receive changeover relay (K302) within the relay section, and then goes to the CN2 (RAT) of the RF unit (A/9 RF section).

The signal input to the RF unit is passed through protection lamp PL1 for strong signal input, external receiver power distribution circuit L1 and L2 and switching circuit K1, and is input to the ATT (–6dB, –12dB) circuit. This distribution circuit is switched when the EXT RX (function that distributes the signals from the antenna to the external receiver), which is set from menu No.53, is turned ON. When this function is ON, the signal from the antenna is attenuated by about 4dB and output to the receiver section in the subsequent stage and the EXT RX terminal on the rear. The signal to the EXT RX terminal is passed through lamp PL2 for protection during transmission. The lamp turns OFF when about 10W is input.

The signal is passed through the ATT switching circuit, then goes to the BC band attenuation circuit (L7 to L9, C19 to C22). The BC band signal is attenuated by 5 to 10dB to prevent power saturation of the band-pass filter switching diode resulting from interference from a proximate station. The band-pass filter consists of two low-pass filters and 10 band-pass filters, and passes signals during transmission. The pin diode (1SV128) is used to change the input to raise the signal saturation level when a HIGH signal is input.

The RF amplifier circuit functions as a low-gain amplifier using Q14 and Q15 : 2SK2218(5) x 2 when the frequency is 21.49MHz or lower, and it functions as a high-gain amplifier using Q13 : 3SK131(M) when the frequency is higher than 21.49MHz. It is bypassed when AIP is ON.

The 73.05MHz first IF signal is generated by quad mixer Q17 to Q20 : 2SK520(K44) x 4. It is passed through XF1 73.05MHz MCF, Q24 : 3SK131(M) first mixer amplifier, and Q26 and Q27 : 2SK520(K43) mixer to produce a 8.83MHz second IF signal. The second IF signal is divided into two signals, one of which is branched to the noise blanker, amplified by amplifier Q28, and then goes to the NB circuit. The other signal is input to the second IF signal amplifier, and serves as a blanking gate by the NB and RBK signals. The amplified second IF signal is passed through the 8.83MHz IF filter, and output to the final unit (C/5 connection section) from CN10. This signal is switched with the diode switch D62 and D68, and functions as a second IF signal output during reception and a third IF signal input during transmission.

The second IF signal input to CN412 in the final unit (C/5 connection section) is routed to the receiver circuit by D450, and input to the mixer Q460 and Q461 to generate a 455kHz third IF signal. It is passed through the 455kHz IF filter, amplified by third IF amplifier Q475, and output by CN411 to the TX-RX unit as RIF signal. The total gain of the receiver unit is adjusted by VR1 in the TX-RX unit.

CIRCUIT DESCRIPTION

■ IF filter

The IF filter consists of a DSP digital filter. If there is a HIGH signal outside the DSP filter band, the analog to digital converter input level may be saturated, and the filter does not work properly. Thus, an analog filter is inserted between the second IF (8.83MHz) and the third IF (455kHz) so that it does not impair the DSP filter properties. To operate each filter properly, there are three kinds of filters for each IF signal and also slope tuning is carried out.

1) Filters characteristics

Item	Rating
Nominal center frequency	73.05MHz
Pass bandwidth	±7.5kHz or more at 3dB
Attenuation bandwidth	±30kHz or less at 40dB
Ripple	1.0dB or less
Insertion loss	3.0dB or less
Guaranteed attenuation	70dB or more at fo + (500 to 1000kHz) 70dB or more at fo – (200 to 1000kHz)
Center frequency deviation	Within ±1.5kHz at 3dB
Terminating impedance	2kΩ ± 10%

MCF (L71-0401-05) : RF unit XF1

Item	Rating
Nominal center frequency	8830kHz
Center frequency deviation	Within ±150Hz at 6dB
Pass bandwidth	±1.5kHz or more at 6dB
Attenuation bandwidth	±1.9kHz or less at 20dB ±2.75kHz or less at 60dB ±3.5kHz or less at 80dB
Ripple	2dB or less
Insertion loss	6dB or less
Guaranteed attenuation	80dB or more in the range ±3.5kHz to ±1MHz
Terminating impedance	600Ω / 15pF

MCF (L71-0235-05) : RF unit XF2

Item	Rating
Nominal center frequency	8830kHz
Pass bandwidth	±3.0kHz or more at 6dB
Attenuation bandwidth	±16.0kHz or less at 60dB ±13.0kHz or less at 50dB
Guaranteed attenuation	70dB or more with in fo ± 1MHz (Without spurious in the range fo to fo+500kHz)
Ripple	Within 1.0dB
Insertion loss	Within 1.5dB
Terminating impedance	1850kΩ / 2pF

MCF (L71-0266-05) : RF unit XF3

Item	Rating
Nominal center frequency	8.400MHz
3dB attenuation bandwidth	Within 180 ± 40kHz
20dB attenuation bandwidth	400kHz or less
Insertion loss	9.0dB or less Formula : 20 x log [E1÷ (2 x E2)]
Ripple	1.0dB or less (within 3dB band)
Spurious attenuation	25dB or more (6.0 to 10.0MHz)
Voltage capacity	50V DC (1 minute)
Insulating resistance	100MΩ or more (100V DC)
Input and output impedance	330Ω

Ceramic filter (L72-0343-05) : RF unit CF500, 501

Item	Rating
Nominal center frequency	455kHz
6dB bandwidth	±3kHz (455kHz)
50dB bandwidth	±9kHz (455kHz)
Ripple	2dB or less (within 455+2kHz)
Insertion loss	6dB or less
Guaranteed attenuation	60dB or more (within 455±100kHz)
Input and output impedance	2.0kΩ

Ceramic filter (L72-0319-05) : Final unit CF451

Item	Rating
Center frequency	455±0.20kHz
6dB bandwidth	2.9 to 3.2kHz
60dB bandwidth	4.7kHz or less
Guaranteed attenuation	60dB or more at 0.1 to 1MHz
Spurious	40dB or more at 600 to 700kHz
6dB band ripple	2dB or less
Insertion loss	6dB or less
Input and output impedance	2kΩ

Ceramic filter (L72-0333-05) : Final unit CF452

Item	Rating
Nominal center frequency	455kHz
6dB bandwidth	±7.5kHz or more (455kHz)
50dB bandwidth	±15kHz or less (455kHz)
Ripple	3dB or less (within 455+5kHz)
Insertion loss	6dB or less
Guaranteed attenuation	35dB or more (within 455±100kHz)
Input and output impedance	1.5kΩ

Ceramic filter (L72-0366-05) : Final unit CF453

CIRCUIT DESCRIPTION

Receiver Circuit

The basic configuration of the receiver circuit is quadruple conversion. After the frequency is converted to the 11.3kHz fourth IF, the DSP carries out AGC, filtering, detection, and signal processing. Figure 3 is a receiver block diagram.

The signal coming from the antenna connector is passed through the antenna switching relay (K301) in the final unit (E/5 relay section), the antenna tuner unit, and the transmit/receive changeover relay (K302) within the relay section, and then goes to the CN2 (RAT) of the RF unit (A/9 RF section).

The signal input to the RF unit is passed through protection lamp PL1 for strong signal input, external receiver power distribution circuit L1 and L2 and switching circuit K1, and is input to the ATT (–6dB, –12dB) circuit. This distribution circuit is switched when the EXT RX (function that distributes the signals from the antenna to the external receiver), which is set from menu No.53, is turned ON. When this function is ON, the signal from the antenna is attenuated by about 4dB and output to the receiver section in the subsequent stage and the EXT RX terminal on the rear. The signal to the EXT RX terminal is passed through lamp PL2 for protection during transmission. The lamp turns OFF when about 10W is input.

The signal is passed through the ATT switching circuit, then goes to the BC band attenuation circuit (L7 to L9, C19 to C22). The BC band signal is attenuated by 5 to 10dB to prevent power saturation of the band-pass filter switching diode resulting from interference from a proximate station. The band-pass filter consists of two low-pass filters and 10 band-pass filters, and passes signals during transmission. The pin diode (1SV128) is used to change the input to raise the signal saturation level when a HIGH signal is input.

The RF amplifier circuit functions as a low-gain amplifier using Q14 and Q15 : 2SK2218(5) x 2 when the frequency is 21.49MHz or lower, and it functions as a high-gain amplifier using Q13 : 3SK131(M) when the frequency is higher than 21.49MHz. It is bypassed when AIP is ON.

The 73.05MHz first IF signal is generated by quad mixer Q17 to Q20 : 2SK520(K44) x 4. It is passed through XF1 73.05MHz MCF, Q24 : 3SK131(M) first mixer amplifier, and Q26 and Q27 : 2SK520(K43) mixer to produce a 8.83MHz second IF signal. The second IF signal is divided into two signals, one of which is branched to the noise blanker, amplified by amplifier Q28, and then goes to the NB circuit. The other signal is input to the second IF signal amplifier, and serves as a blanking gate by the NB and RBK signals. The amplified second IF signal is passed through the 8.83MHz IF filter, and output to the final unit (C/5 connection section) from CN10. This signal is switched with the diode switch D62 and D68, and functions as a second IF signal output during reception and a third IF signal input during transmission.

The second IF signal input to CN412 in the final unit (C/5 connection section) is routed to the receiver circuit by D450, and input to the mixer Q460 and Q461 to generate a 455kHz third IF signal. It is passed through the 455kHz IF filter, amplified by third IF amplifier Q475, and output by CN411 to the TX-RX unit as RIF signal. The total gain of the receiver unit is adjusted by VR1 in the TX-RX unit.

CIRCUIT DESCRIPTION

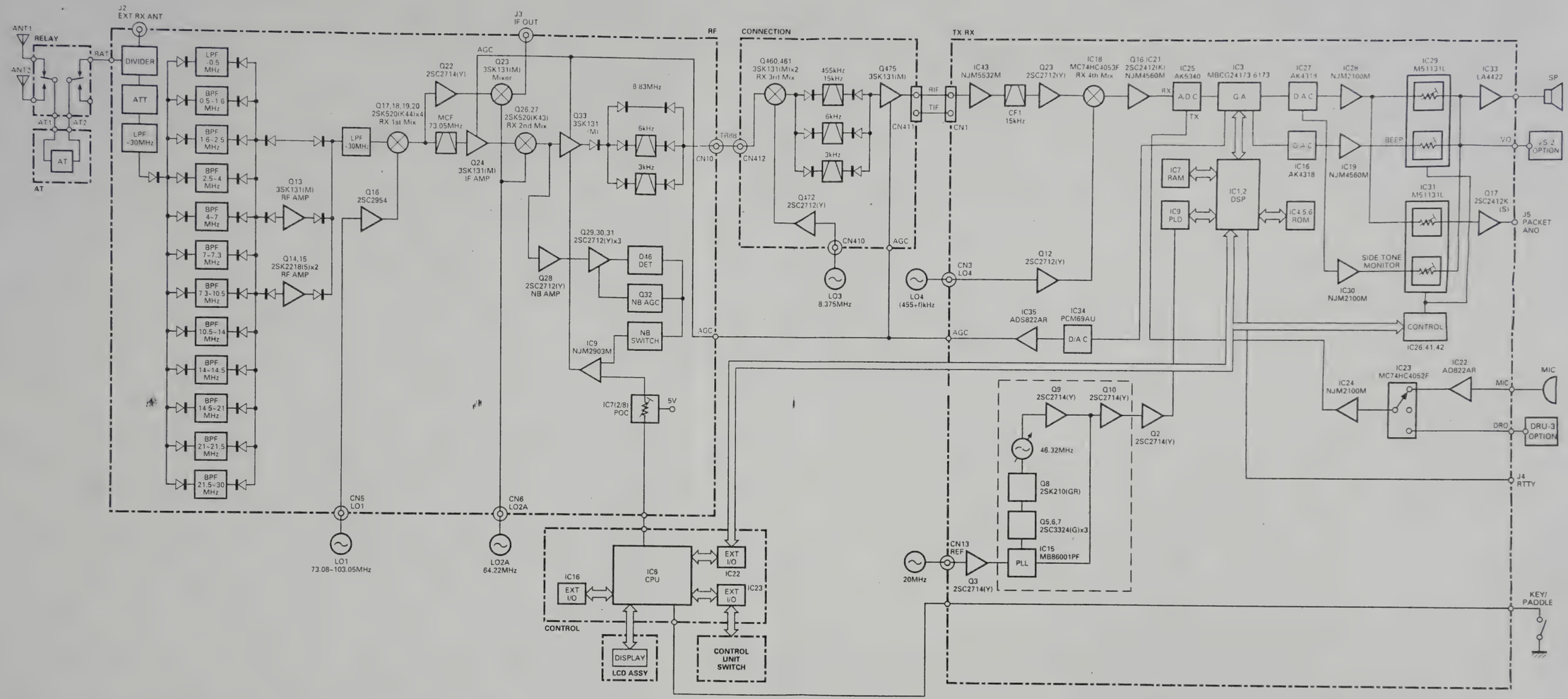

Fig. 3 Receiver block diagram

CIRCUIT DESCRIPTION

■ IF gain correction

The total gain changes when the AIP is turned ON or OFF or the band is 21.49MHz or higher. To limit the changes, the DSP corrects the IF gain. Table 2 lists the corrections. When the "AIP S-meter correction" on menu No.11 is turned ON, the S-meter is corrected when the AIP is turned ON. And since the IF gain is corrected greatly, the receiver internal noise output becomes large.

Frequency	Correction (dB)			Pre-amp gain (dB) reference
	AIP			
	OFF	ON1 (Menu 11 OFF)	ON2 (Menu 11 ON) SSB, CW, FSK only	
30kHz~ 21.49MHz	–2	0	+12	15
21.49MHz~ 30.MHz	–7	0	+12	21

Table 2 IF gain corrections

■ NB circuit

The noise blanker, like the conventional one, branches the signal before the narrow-band filter of the 8.83MHz second IF, and detects noise, and performs blanking using the second IF amplifier as a gate. The signal is amplified by Q28, detected by the AGC amplification and noise detection circuit consisting of Q29 to Q32 and D46, and then a blanking pulse is generated by the IC9 comparator. The noise detection circuit Q29 to Q32 and D46 is separated into segments by a jumper in the unit to prevent sneak path.

■ Slope tune

The operating principle of SSB-SLOPE-TUNE is explained first. When f_{LO1}, f_{LO3}, and f_{LO4} in Figure 4 are at their normal frequencies, the synthesized bandwidth is indicated by A. If the f_{LO1} frequency is increased by $\Delta f1$ and the f_{LO3} frequency is decreased by $\Delta f1$, the filter of the 8.83MHz band shifts to position B. The synthesized bandwidth is indicated by the section overlapped by A and B. When the frequencies of f_{LO1} and f_{LO3} are lowered by $\Delta f2$, only the 455kHz second IF filter shifts to position C. The synthesized bandwidth is indicated by the section overlapped by B and C.

Therefore, high frequencies are cut off by increasing the f_{LO1} frequency and decreasing the f_{LO3} frequency. Low frequencies are cut off by decreasing the f_{LO3} and f_{LO4} frequencies. The TS-870S enables these operations using the DSP filter.

In SSB mode, slope tune high cut/low cut is switched by using the filter select control : in CW mode, the WIDTH (bandwidth)/SHIFT (center frequency) is changed, and in FSK mode, the WIDTH (bandwidth) is changed. The microcomputer in the control unit sends filter select data to the DSP, and slope tuning is carried out by changing frequency data given to the PLL and DDS. The second IF (8.83MHz) and third IF (455kHz) filters are selected to carry out slope tuning effectively. Tables 3 and 4 list filter selections, slope tuning and analog filter high cut/low cut amounts. Slope tuning low cut/high cut can be switched in AM mode, and the WIDTH can be switched in FM mode by using DSP filters only, and the analog filter is fixed to 15kHz.

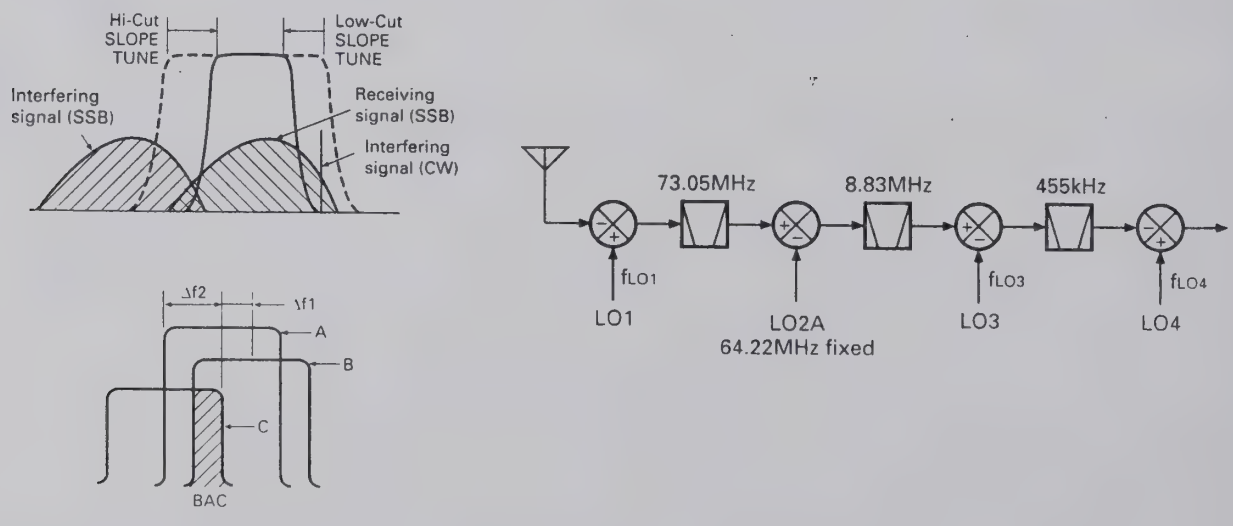

Fig. 4 SSB slope tune operating principle

CIRCUIT DESCRIPTION

	1.4k	1.6k	1.8k	2.0k.	2.2k	2.4k	2.6k	2.8k	3.0k	3.4k	4.6k	6.0k
0 (Hz)	1.0k	0.8k	0.6k	0.4k	0.2k	0.0k	1.4k	1.2k	1.0k	0.6k	0.0k	0.0k
50	↑	↑	↑	↑	↑	↑	↑	↑	↑	↑	↑	↑
100	↑	↑	↑	↑	↑	↑	↑	↑	↑	↑	↑	↑
200	↑	↑	↑	↑	↑	↑	–0.2k	↑	↑	↑	↑	↑
300	↑	↑	↑	↑	↑	↑	↑	↑	↑	↑	↑	↑
400	↑	↑	↑	↑	↑	↑	↑	–0.4k	↑	↑	↑	↑
500	↑	↑	↑	↑	↑	↑	↑	↑	↑	↑	↑	↑
600	↑	↑	↑	↑	↑	↑	↑	↑	–0.6k	↑	↑	↑
800	↑	↑	↑	↑	↑	↑	↑	↑	↑	↑	–0.6k	↑
1000	↑	↑	↑	↑	↑	↑	↑	↑	↑	–1.0k	↑	↑

← High cut position

Filter selection
- 3kHz filter
- 6kHz filter
- 15kHz filter
- Default

↑
Low cut posotion
(455kHz filter) Low cut amount

(8.83MHz filter) High cut amount

Table 3 SSB slop tuning and analog filter high/low cut (Hz)

	400	450	500	550	600	650	700	750	800	850	900	950	1000
50 (Hz)	375	425	475	525	575	625	675	725	775	825	875	925	975
100	350	400	450	500	550	600	650	700	750	800	850	900	950
200	300	350	400	450	500	550	600	650	700	750	800	850	900
400	200	250	300	350	400	450	500	550	600	650	700	750	800
600	100	150	200	250	300	350	400	450	500	550	600	650	700
1000	–100	–50	0	50	100	150	200	250	300	350	400	450	500

← Filter center position

Default

↑
Filter width

Table 4-1 CW WIDTH/SHIFT low cut amount (Hz)

	400	450	500	550	600	650	700	750	800	850	900	950	1000
50 (Hz)	1975	1925	1875	1825	1775	1725	1675	1625	1575	1525	1475	1425	1375
100	1950	1900	1850	1800	1750	1700	1650	1600	1550	1500	1450	1400	1350
200	1900	1850	1800	1750	1700	1650	1600	1550	1500	1450	1400	1350	1300
400	1800	1750	1700	1650	1600	1550	1500	1450	1400	1350	1300	1250	1200
600	1700	1650	1600	1550	1500	1450	1400	1350	1300	1250	1200	1150	1100
1000	1500	1450	1400	1350	1300	1250	1200	1150	1100	1050	1000	950	900

← Filter center position

Default

↑
Filter width

Table 4-2 CW WIDTH/SHIFT high cut amount (Hz)

■ IF filter

The IF filter consists of a DSP digital filter. If there is a HIGH signal outside the DSP filter band, the analog to digital converter input level may be saturated, and the filter does not work properly. Thus, an analog filter is inserted between the second IF (8.83MHz) and the third IF (455kHz) so that it does not impair the DSP filter properties. To operate each filter properly, there are three kinds of filters for each IF signal and also slope tuning is carried out.

1) Filters characteristics

Item	Rating
Nominal center frequency	73.05MHz
Pass bandwidth	±7.5kHz or more at 3dB
Attenuation bandwidth	±30kHz or less at 40dB
Ripple	1.0dB or less
Insertion loss	3.0dB or less
Guaranteed attenuation	70dB or more at fo + (500 to 1000kHz) 70dB or more at fo – (200 to 1000kHz)
Center frequency deviation	Within ±1.5kHz at 3dB
Terminating impedance	2kΩ ± 10%

MCF (L71-0401-05) : RF unit XF1

Item	Rating
Nominal center frequency	8830kHz
Center frequency deviation	Within ±150Hz at 6dB
Pass bandwidth	±1.5kHz or more at 6dB
Attenuation bandwidth	±1.9kHz or less at 20dB ±2.75kHz or less at 60dB ±3.5kHz or less at 80dB
Ripple	2dB or less
Insertion loss	6dB or less
Guaranteed attenuation	80dB or more in the range ±3.5kHz to ±1MHz
Terminating impedance	600Ω / 15pF

MCF (L71-0235-05) : RF unit XF2

Item	Rating
Nominal center frequency	8830kHz
Pass bandwidth	±3.0kHz or more at 6dB
Attenuation bandwidth	±16.0kHz or less at 60dB ±13.0kHz or less at 50dB
Guaranteed attenuation	70dB or more with in fo ± 1MHz (Without spurious in the range fo to fo+500kHz)
Ripple	Within 1.0dB
Insertion loss	Within 1.5dB
Terminating impedance	1850kΩ / 2pF

MCF (L71-0266-05) : RF unit XF3

Item	Rating
Nominal center frequency	8.400MHz
3dB attenuation bandwidth	Within 180 ± 40kHz
20dB attenuation bandwidth	400kHz or less
Insertion loss	9.0dB or less Formula : 20 x log [E1÷ (2 x E2)]
Ripple	1.0dB or less (within 3dB band)
Spurious attenuation	25dB or more (6.0 to 10.0MHz)
Voltage capacity	50V DC (1 minute)
Insulating resistance	100MΩ or more (100V DC)
Input and output impedance	330Ω

Ceramic filter (L72-0343-05) : RF unit CF500, 501

Item	Rating
Nominal center frequency	455kHz
6dB bandwidth	±3kHz (455kHz)
50dB bandwidth	±9kHz (455kHz)
Ripple	2dB or less (within 455+2kHz)
Insertion loss	6dB or less
Guaranteed attenuation	60dB or more (within 455±100kHz)
Input and output impedance	2.0kΩ

Ceramic filter (L72-0319-05) : Final unit CF451

Item	Rating
Center frequency	455±0.20kHz
6dB bandwidth	2.9 to 3.2kHz
60dB bandwidth	4.7kHz or less
Guaranteed attenuation	60dB or more at 0.1 to 1MHz
Spurious	40dB or more at 600 to 700kHz
6dB band ripple	2dB or less
Insertion loss	6dB or less
Input and output impedance	2kΩ

Ceramic filter (L72-0333-05) : Final unit CF452

Item	Rating
Nominal center frequency	455kHz
6dB bandwidth	±7.5kHz or more (455kHz)
50dB bandwidth	±15kHz or less (455kHz)
Ripple	3dB or less (within 455+5kHz)
Insertion loss	6dB or less
Guaranteed attenuation	35dB or more (within 455±100kHz)
Input and output impedance	1.5kΩ

Ceramic filter (L72-0366-05) : Final unit CF453

■ IF gain correction

The total gain changes when the AIP is turned ON or OFF or the band is 21.49MHz or higher. To limit the changes, the DSP corrects the IF gain. Table 2 lists the corrections. When the "AIP S-meter correction" on menu No.11 is turned ON, the S-meter is corrected when the AIP is turned ON. And since the IF gain is corrected greatly, the receiver internal noise output becomes large.

Frequency	Correction (dB)			Pre-amp gain (dB) reference
	AIP			
	OFF	ON1 (Menu 11 OFF)	ON2 (Menu 11 ON) SSB, CW, FSK only	
30kHz~ 21.49MHz	–2	0	+12	15
21.49MHz~ 30.MHz	–7	0	+12	21

Table 2 IF gain corrections

■ NB circuit

The noise blanker, like the conventional one, branches the signal before the narrow-band filter of the 8.83MHz second IF, and detects noise, and performs blanking using the second IF amplifier as a gate. The signal is amplified by Q28, detected by the AGC amplification and noise detection circuit consisting of Q29 to Q32 and D46, and then a blanking pulse is generated by the IC9 comparator. The noise detection circuit Q29 to Q32 and D46 is separated into segments by a jumper in the unit to prevent sneak path.

■ Slope tune

The operating principle of SSB-SLOPE-TUNE is explained first. When f_{LO1}, f_{LO3}, and f_{LO4} in Figure 4 are at their normal frequencies, the synthesized bandwidth is indicated by A. If the f_{LO1} frequency is increased by $\Delta f1$ and the f_{LO3} frequency is decreased by $\Delta f1$, the filter of the 8.83MHz band shifts to position B. The synthesized bandwidth is indicated by the section overlapped by A and B. When the frequencies of f_{LO1} and f_{LO3} are lowered by $\Delta f2$, only the 455kHz second IF filter shifts to position C. The synthesized bandwidth is indicated by the section overlapped by B and C.

Therefore, high frequencies are cut off by increasing the f_{LO1} frequency and decreasing the f_{LO3} frequency. Low frequencies are cut off by decreasing the f_{LO3} and f_{LO4} frequencies. The TS-870S enables these operations using the DSP filter.

In SSB mode, slope tune high cut/low cut is switched by using the filter select control : in CW mode, the WIDTH (bandwidth)/SHIFT (center frequency) is changed, and in FSK mode, the WIDTH (bandwidth) is changed. The microcomputer in the control unit sends filter select data to the DSP, and slope tuning is carried out by changing frequency data given to the PLL and DDS. The second IF (8.83MHz) and third IF (455kHz) filters are selected to carry out slope tuning effectively. Tables 3 and 4 list filter selections, slope tuning and analog filter high cut/low cut amounts. Slope tuning low cut/high cut can be switched in AM mode, and the WIDTH can be switched in FM mode by using DSP filters only, and the analog filter is fixed to 15kHz.

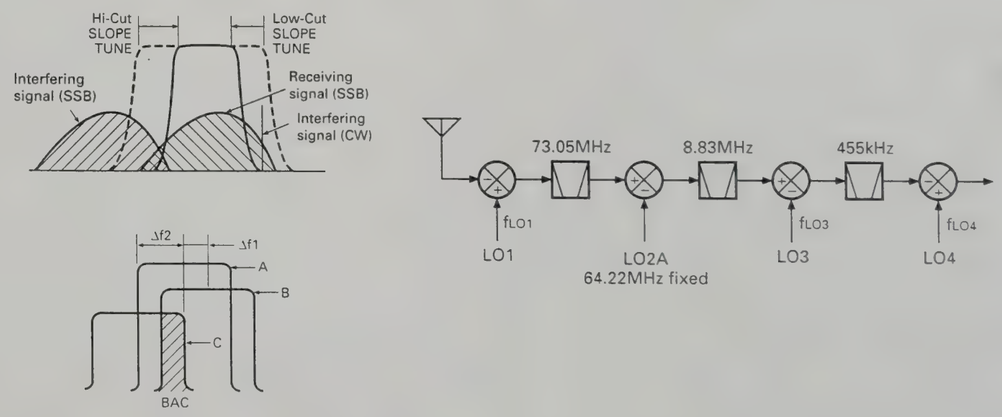

Fig. 4 SSB slope tune operating principle

CIRCUIT DESCRIPTION

	1.4k	1.6k	1.8k	2.0k	2.2k	2.4k	2.6k	2.8k	3.0k	3.4k	4.6k	6.0k
0 (Hz)	1.0k	0.8k	0.6k	0.4k	0.2k	0.0k	1.4k	1.2k	1.0k	0.6k	0.0k	0.0k
50	↑	↑	↑	↑	↑	↑	↑	↑	↑	↑	↑	↑
100	↑	↑	↑	↑	↑	↑	↑	↑	↑	↑	↑	↑
200	↑	↑	↑	↑	↑	↑	–0.2k	↑	↑	↑	↑	↑
300	↑	↑	↑	↑	↑	↑	↑	↑	↑	↑	↑	↑
400	↑	↑	↑	↑	↑	↑	↑	–0.4k	↑	↑	↑	↑
500	↑	↑	↑	↑	↑	↑	↑	↑	↑	↑	↑	↑
600	↑	↑	↑	↑	↑	↑	↑	↑	–0.6k	↑	↑	↑
800	↑	↑	↑	↑	↑	↑	↑	↑	↑	↑	–0.6k	↑
1000	↑	↑	↑	↑	↑	↑	↑	↑	↑	–1.0k	↑	↑

← High cut position

Filter selection
- 3kHz filter
- 6kHz filter
- 15kHz filter
- Default

↑
Low cut posotion
(455kHz filter) Low cut amount

(8.83MHz filter) High cut amount

Table 3 SSB slop tuning and analog filter high/low cut (Hz)

	400	450	500	550	600	650	700	750	800	850	900	950	1000
50 (Hz)	375	425	475	525	575	625	675	725	775	825	875	925	975
100	350	400	450	500	550	600	650	700	750	800	850	900	950
200	300	350	400	450	500	550	600	650	700	750	800	850	900
400	200	250	300	350	400	450	500	550	600	650	700	750	800
600	100	150	200	250	300	350	400	450	500	550	600	650	700
1000	–100	–50	0	50	100	150	200	250	300	350	400	450	500

← Filter center position

Default

↑
Filter width

Table 4-1 CW WIDTH/SHIFT low cut amount (Hz)

	400	450	500	550	600	650	700	750	800	850	900	950	1000
50 (Hz)	1975	1925	1875	1825	1775	1725	1675	1625	1575	1525	1475	1425	1375
100	1950	1900	1850	1800	1750	1700	1650	1600	1550	1500	1450	1400	1350
200	1900	1850	1800	1750	1700	1650	1600	1550	1500	1450	1400	1350	1300
400	1800	1750	1700	1650	1600	1550	1500	1450	1400	1350	1300	1250	1200
600	1700	1650	1600	1550	1500	1450	1400	1350	1300	1250	1200	1150	1100
1000	1500	1450	1400	1350	1300	1250	1200	1150	1100	1050	1000	950	900

← Filter center position

Default

↑
Filter width

Table 4-2 CW WIDTH/SHIFT high cut amount (Hz)

CIRCUIT DESCRIPTION

■ Local signals (LO1, LO3, LO4)

1) LO1

Table 5 lists LO1 frequency configuration.

DDS1 varies from 0.46 to 1.46MHz, and when the display frequency is multiple MHz (for example, 14.000MHz), 0.96MHz is output. When the display frequency is increased, the DDS1 frequency is reduced by the amount of change. When the DDS1 frequency is reduced to 0.46MHz, the frequency is switched to 1.46MHz, and when it is increased to 1MHz, the frequency returns to 0.96MHz (Figure 5). By changing the 1MHz band in synchronization with the display frequency, the 1MHz comparison PLL circuit is locked and LO1 is generated.

In Table 5, the 0.96MHz base indicates the DDS output when the frequency is multiple MHz. The frequency (UNV) indicates the decimal digits of the MHz frequency. (If the display frequency is 14.2MHz, (UNV) = 0.2MHz.) DDS is switched by 500kHz, so – 0.5MHz ≤ (UNV) < 0.5MHz.

As described in the slope tuning section, slope tuning high-cutting is corrected for LO1, so the correction is added to the DDS output. SSB H in Table 5 indicates the correction. Table 3 shows the actual correction of SSB H. (For example, when the high frequency is 2.2kHz, the correction SSB H is 0.2kHz.)

Since RIT and XIT change the receive and transmit frequencies by the preset amount, it needs to be corrected. They are D RIT and D XIT in Table 5.

The "8.83MHz window-joining" (D 883) in Table 5 is determined during adjustment. For example, the equation for calculating the DDS output frequency for 14.2MHz USB. The high-cut frequency is assumed to be 2.6kHz. (D 833 is zero.)

DDS1 : 0.96M – (UNV) – (OFS SSB) + (SSB H)
= 0.96M – 0.2M – 1.2k – 0.2k
= 758.6kHz
0.96M : Base
UNV : 14.2M – 14.0M = 0.2M
OFS SSB (Filter offset) : 1.2k
SSB H (Slope HI) : –0.2k (See table 3.)

The LO1 output frequency f_{LO1} is calculated from the frequency configuration in Figure 6.

$f_{LO1} = f_{PLL\ IN} + 60MHz - (4MHz + f_{DDS1})$
$= 32MHz + 60MHz - (4MHz + 758.6kHz)$
$= 87.2414MHz$

Where $f_{PLL\ IN}$ is the PLL input frequency and f_{DDS1} is the DDS1 output frequency.

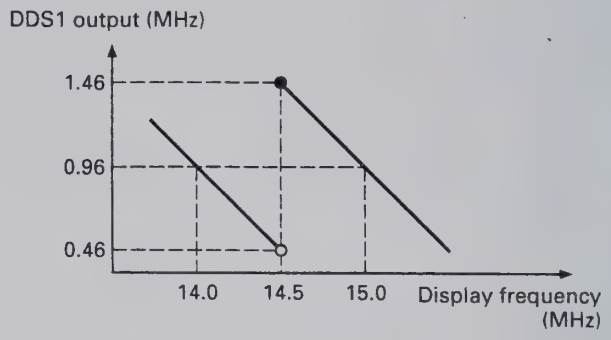

Fig. 5 Relationship between display frequency and DDS output frequency

2) LO3

Table 6 lists the LO3 frequency configuration.

The LO3 frequency is 8.375MHz, and is generated by the chopper circuit. The DDS2 output frequency is 1.625MHz. For LO3, slope tuning low-cut/high-cut is corrected. SSB H and SSB L in Table 6 indicate the corrections. D 833 and D 455 are values determined during filter window-joining and adjustment.

For example, if USB is 14.2MHz, high-cut frequency is 2.6kHz, and low-cut frequency is 300Hz, the LO3 frequency is calculated as follows. It is assumed that D 833 and D 455 are zero.

$f_{LO3} = 1.625MHz + (SSB\ H) + (SSB\ L)$
$= 1.625MHz + (-0.2kHz) + 300Hz$
$= 1625.1kHz$

CIRCUIT DESCRIPTION

3) LO4

Table 7 lists the LO4 frequency configuration.

For LO4, correction (OFS SSB) is carried out so that a signal passes through a filter according to the mode, and the slope tune low-cut (SSB L) is corrected. The mode offset is the frequency (11.30859375kHz) used for processing by the DSP, and its sign changes with the mode.

For example, if USB is 14.2MHz and the low-cut frequency is 300Hz, the LO4 output frequency is calculated as follows.

f_{LO4} = 455kHz + (mode offset) + (OFS SSB) + (SSB L)
= 455kHz + 11.30859375kHz + 300Hz
= 467.8085938kHz

The filter is corrected according to each mode by LO1 and LO4, slope tuning high-cut is corrected by LO1 and LO3, and low-cut is corrected by LO3 and LO4.

In other modes, each local frequency is determined by the calculation method as shown previously in Tables 5 to 7.

Component	DDS1 (1HZ)															
	LSB		USB		CW		CW-R		FSK		FSK-R		AM		FM	
	RX	TX	RX	TX	RX	TX	RX	TX	RX	TX	RX	TX	RX	TX	RX	TX
BASE	0.96MHz*6															
Frequency (100kHz or less)	– (UNV)															
Mode offset																
Filter offset*1	+ (OFS SSB)	+2k	– (OFS SSB)	–2k	–800		+800									
CW pitch					+ (PITCH)		– (PITCH)									
FSK tone (H/L)																
FSK shift (polarity)																
RIT	– (D RIT)		– (D RIT)		– (D RIT)		– (D RIT)		– (D RIT)		– (D RIT)		– (D RIT)		– (D RIT)	
XIT		– (D RIT)		– (D RIT)		– (D RIT)		– (D RIT)		– (D RIT)		– (D RIT)		– (D RIT)		– (D RIT)
Slope high*2, 3	– (SSB H)		+ (SSB H)		+ (CW H)		– (CW H)		– (FSK H)		+ (FSK H)					
Slope low																
8.83MHz window-joining*4, 5	– (D 883)			+ (D 883)												
455kHz window-joining																

*1 : Although receiver data has an independent value for each mode, the data area for calculation is D OFFSET.
Transmitter data is fixed because the 8.83MHz filter bandwidth is fixed.

*2 : Although it has an independent value for each mode, the data area for calculation is D SLOP L.

*3 : The slope low-cut is carried out at 455kHz and high-cut is carried out at 8.83MHz.

*4 : The LSB and USB may have the same value because the filter bandwidth is wide.

*5 : The positive direction for adjustment is the direction in which the receive carrier frequency increases.

*6 : The DDS1 variable frequency is 1.45MHz and is shifted by 500kHz.

Table 5 LO1 frequency configuration

CIRCUIT DESCRIPTION

Component	DDS2 (LO3)															
	LSB		USB		CW		CW-R		FSK		FSK-R		AM		FM	
	RX	TX	RX	TX	RX	TX	RX	TX	RX	TX	RX	TX	RX	TX	RX	TX
BASE	1.625MHz*6															
Mode offset																
Filter offset																
CW pitch																
FSK tone (H/L)																
FSK shift (polarity)																
RIT/XIT																
Slope high*1, 3	– (SSB H)		+ (SSB H)		+ (CW H)		– (CW H)		– (FSK H)		+ (FSK H)					
Slope low*2, 3	– (SSB L)		+ (SSB L)		+ (CW L)		– (CW L)		– (FSK L)		+ (FSK L)					
8.83MHz window-joining*4, 5	– (D 883)			+ (D 883)												
455kHz window-joining*4, 5	+ (D 455)			– (D 455)												

*1 : Although it has an independent value for each mode.

*2 : Although it has an independent value for each mode.

*3 : The slope low-cut is carried out at 455kHz and high-cut is carried out at 8.83MHz.

*4 : The LSB and USB may have the same value because the filter bandwidth is wide.

*5 : The positive direction for adjustment is the direction in which the receive carrier frequency increases.

*6 : Since the DDS2 output frequency is high, 1.625MHz (10MHz – output frequency (8.375MHz)) is output to the DDS.

Table 6 LO3 frequency configuration

Component	DDS3 (LO4)															
	LSB		USB		CW		CW-R		FSK		FSK-R		AM		FM	
	RX	TX	RX	TX	RX	TX	RX	TX	RX	TX	RX	TX	RX	TX	RX	TX
BASE	455kHz															
Mode offset (kHz)	–11.30859375		+11.30859375		+11.30859375		–11.30859375		–11.30859375		+11.30859375		+11.30859375		+11.30859375	
Filter offset*1	– (OFS SSB)	–2k	+ (OFS SSB)	+2k	+800		–800									
CW pitch																
FSK tone (H/L)									–2125 /–1275		+2125 /+1275					
FSK shift (polarity)											+ (FSK S)	+ (FSK S)				
RIT/XIT																
Slope high																
Slope low*2, 3	– (SSB L)		+ (SSB L)		+ (CW L)		– (CW L)		– (FSK L)		+ (FSK L)					
8.83MHz window-joining																
455kHz window-joining*4, 5	– (D 455)			+ (D 455)												

*1 : Although receiver data has an independent value for each mode.
Transmitter data is fixed because the 8.83MHz filter bandwidth is fixed.

*2 : Although it has an independent value for each mode.

*3 : The slope low-cut is carried out at 455kHz and high-cut is carried out at 8.83MHz.

*4 : The LSB and USB may have the same value because the filter bandwidth is wide.

*5 : The positive direction for adjustment is the direction in which the receive carrier frequency increases.

Table 7 LO4 frequency configuration

CIRCUIT DESCRIPTION

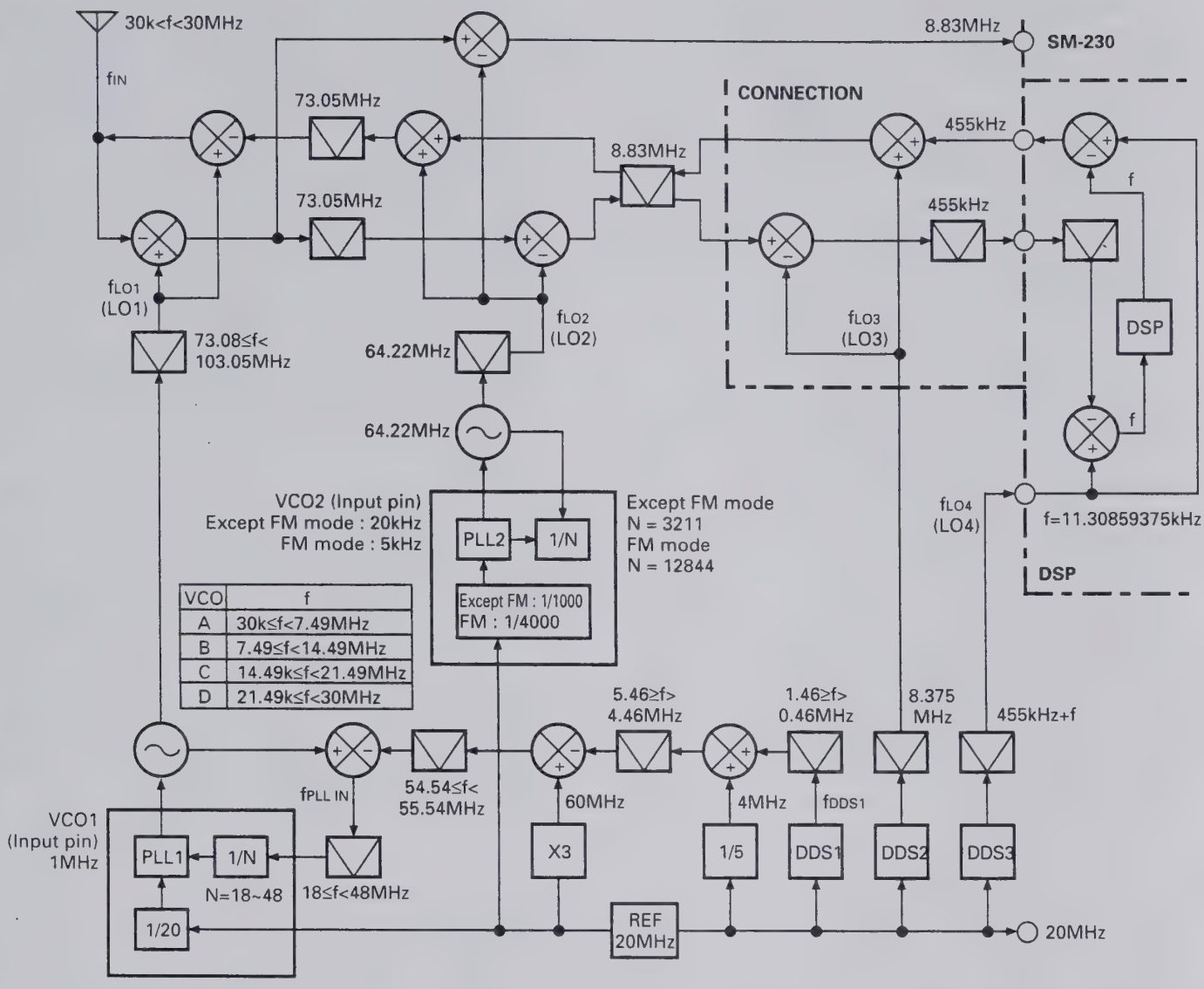

Fig. 6 Frequency configuration

CIRCUIT DESCRIPTION

Transmitter Circuit

The transmitter system block diagram is shown in Figure 7.

The TS-870S has the same frequency configuration as the TS-850 after the DSP generates the IF signal and converts it to 455kHz as a basic configuration.

A difference from the conventional model other than DSP modulation is that the TS-870S uses a digital-to-analog converter and a microcomputer for various controls. This allows for fine control and reduces the number of controls needed for adjustment.

The TIF (second IF) signal output from the TX-RX unit goes to the final unit (C/5 connection section). The signal is converted from 455kHz to 8.83MHz. The 8.83MHz third IF signal converted by the Q470 and Q471: 3SK131(M) mixer is switched to the transmitter by the D450 diode switch, and output from CN412 to the RF unit (A/9 RF section) as TR88 signal.

The signal input to CN10 of the RF unit is passed through the 8.83MHz IF filter used for both transmission and reception. During transmission, XF3 BW: 5kHz is selected by D69 and D67 and the filter attenuates the components outside the band. The transmit signal switched by D68 is amplified and ALC-controlled by the Q39 ALC amplifier, and the resulting signal goes to the D49 TX gain control circuit. This circuit controls the gain at the transmission stage according to the given voltage via a variable attenuator of a pin diode. The control voltage is controlled by a microprocessor, and is used to set the gain for each band or set the gain with the PWR knob and mode.

The third IF signal is then converted to the 73.05MHz fourth IF signal by the Q37 and Q38 : 3SK131(M) mixer. The signal is passed through the LC filter, and is converted to the target frequency by the final local oscillator LO1 at the Q35 and Q36 : 3SK184(R) mixer. The signal is passed through the radiation filter and the band-pass filter used by both the transmitter and receiver sections to attenuate the spurious outside the band. The band-pass filter output is amplified by Q5 : 2SC2954, and output to the final unit (A/5 final section) from CN4 as the drive signal.

■ TX-AGC

The DSP controls the input level until it starts modulation. It is like AGC applied to the microphone amplifier, and when the input level exceeds the certain level, the amplifier gain decreases to keep the modulator input level constant, i.e., to keep the IF output constant.

The MIC gain control in SSB and AM modes is used to adjust the maximum gain of the AGC amplifier in the 40dB range. Even if the control is set maximum, the input level to the modulator is kept constant. If the PROC is OFF in SSB mode, the CAR level (TIF output level) is fixed, and the ALC effect is limited. If the PROC is ON in SSB mode, the ALC effect is adjusted by the CAR control. The microphone amplifier gain is fixed, but the speech processor input level is controlled by the AGC and then becomes the level set by the PROC control.

In FM mode, the microphone amplifier sensitivity can be changed to high or low by using Menu No.61. Since the frequency deviation is limited by the TX-AGC, it is not distorted extremely like in the clipper method. In AM mode, the sensitivity is controlled so that modulation does not exceed 70%.

The TX-AGC is required to stabilize the DSP modulator operation. The modulator may operate without using the AGC by reduction of the gain and input level, but it cannot be completely turned OFF. Care must therefore be taken when measuring the ALC properties and frequency characteristics.

CIRCUIT DESCRIPTION

AT Unit (Auto Antenna Tuner)

When the AUTO/THROUGH switch is set to AUTO, ATA goes LOW, the AUTO/THROUGH switching relay K1 is executed, and AT is inserted to prepare for tuning. If "RX AT ON" is set in menu No.8, AT is inserted during reception. If the position of variable capacitor VC1 or VC2 is not the preset position of the band, presetting is performed. The AT tune and transmission do not occur until presetting ends.

When AT TUNE is turned on with this condition, ATS goes HIGH, the CW mode is set, and the transmission output becomes about 10W. If the SWR is lower than 1.2, the tuning is completed and auto antenna tuning ends. If the SWR is greater than 1.2, the motor control pulse duty (described later) is controlled according to the SWR.

The SWR can be set to 1.6 after AT tuning by turning menu No. 33 "TUNE WIDE" ON.

The motor speed is determined by a microcomputer. Its direction is controlled by phase comparator IC1 and amplitude comparator IC6 if the APRE is LOW, and controlled by the microcomputer if the APRE is HIGH.

■ Auto tuning mode

The transmission power from the final section via the filter section is passed through the current/voltage detection transformer L1 and L2, which use a troidal core. The current and voltage components detected here are rectified by the waveform rectification circuit consisting of D4, D7, Q1, and Q2, and then the phase is compared by IC1. The output signals ($\overline{Q}$ and Q) from pins 8 and 9 of IC1 are passed through the switch by IC2 and are applied to motor drive IC IC4. Variable capacitor VC1 is rotated by the motor M1 so that the phase difference of the voltage and current components decreases.

The voltage and current components detected by L1 and L2 are rectified by diodes D1 and D2 and are applied to the comparator of voltage comparison circuit IC6 as the amplitude component. The comparator output is passed through switch IC3. Motor M2 is driven by another motor drive IC IC5 and variable capacitor VC2 is rotated in the direction that decreases the amplitude difference of the voltage and current components.

Variable capacitor VC1 for capacity adjustment is therefore controlled so that the current and voltage phases match. Variable capacitor VC2 for resistance adjustment is controlled so that the current and voltage amplitude difference decreases. SWR becomes 1 when the phases match and the amplitude difference is zero.

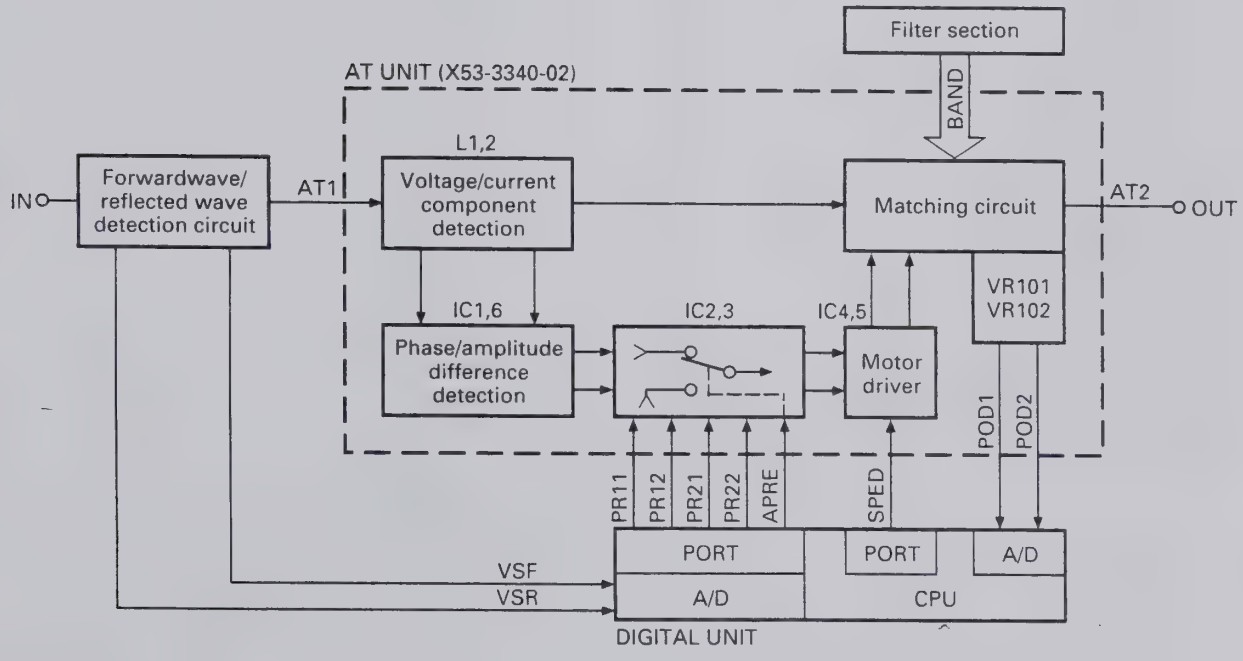

Fig. 9 AT unit block diagram

CIRCUIT DESCRIPTION

The speeds of motors M1 and M2 are determined by the duty cycle of the pulse input to control input pin 8 of IC4 and IC5, and controlled by the standing wave ratio (SWR) calculated by the control unit CPU.

Pulse signal SPED output from the control unit is passed through Q5 : DTC114EK, amplified by Q4, and input to IC4 and IC5 as a control pulse.

If the SWR is 2 or more, the duty cycle of the motor drive voltage pulse is 100%. If the SWR is 1.5 to 2, the duty cycle becomes approx. 80%. If the SWR is less than 1.5, the duty ratio becomes approx. 50% and the motor runs at low speed.

The matching circuit is T type, and the tap position from 1.8 to 30MHz is switched by seven relays K101 to K103 and K105 to K108.

Position detection volumes VR101 and VR102 are linked to the rotation axes of variable capacitors VC1 and VC2 with a gear ratio of 1 : 1. The voltages of 0 to 5V (POD1 and POD2) are generated according to the capacities of the variable capacitors. This position voltage data is sent to the microprocessor in the control unit through the analog to digital converter, and is used as the reference voltage in the feedback control system, such as for preset tuning. The same signal is also used for presetting data and end-detection.

The volume used by the TS-870S is a normal one, not an endless one. Since the rotation angle of this volume is limited, the rotation range is from the minimum capacity to the maximum capacity plus allowance.

By this control, like the preset tuning, which will be described later, POD1 and POD2 are monitored by the microprocessor. If the lower limit voltage of 0.6V or the upper limit voltage of 4.2V is reached, the microprocessor detects that the voltage is close to a limit. To return the voltage to the opposite side, APRE is made HIGH. If the variable capacitor is VC1, and the voltage is close to the lower limit in respect to POD1, the voltage near the upper limit is output. If the voltage is close to the upper limit in respect to POD1, the voltage near the lower limit is output.

The other variable capacitor VC2 outputs the voltage read by POD2 as it is. If the variable capacitor voltage exceeds the specified limit, it returns to the other limit. The other variable capacitor remains in the same position.

If the APRE is HIGH, the motor rotation direction is determined by the CPU unless auto tuning is performed.

The logic for PR11 to PR22 is the same as for IC4 and IC5 : BA6109U2. The signal output from the digital unit passes through IC2 and IC3 : TC4066BP and enters IC4 and IC5.

		PR11	PR12	PR21	PR22
Motor 1	Normal rotation	H	L	–	–
	Reverse rotation	L	H	–	–
Motor 2	Normal rotation	–	–	H	L
	Reverse rotation	–	–	L	H

■ Preset tuning

When tuning ends, the position of the variable capacitor is stored in memory by the microprocessor as preset data for that band.

When the band is changed after tuning is performed in another band, APRE goes HIGH, the motor is controlled by the microprocessor, and preset tuning is performed. During preset tuning, auto tuning or signal transmission is inhibited even if the AT TUNE switch is pressed or transmission becomes ready.

The initial preset-data when the microprocessor is reset includes standard data for a 50-ohm load on each band.

■ Preset memory band

30kHz ≤ f
1.850MHz ≤ f
2.010MHz ≤ f
3.525MHz ≤ f
3.575MHz ≤ f
3.725MHz ≤ f
4.490MHz ≤ f
7.030MHz ≤ f
7.100MHz ≤ f
7.490MHz ≤ f
10.490MHz ≤ f
14.100MHz ≤ f
14.490MHz ≤ f
20.990MHz ≤ f
21.150MHz ≤ f
21.990MHz ≤ f
25.490MHz ≤ f
29.000MHz ≤ f

CIRCUIT DESCRIPTION

Standby Control and Timing

Standby control and timing are carried out by using software for the main CPU in the control unit (X53-356X-XX). The control signals for the control unit are listed below. (See Figure 10 for each timing chart.)

SS : Standby switch input signal. Active LOW.
KEY : Keying input signal from the keyer. Active LOW.
TXC : Transmission output signal. Active HIGH. Same timing as TXB.
RXC : Reception output signal. Active HIGH. Same timing as RXB.
CKY : Output signal. Active HIGH.

With the SS line

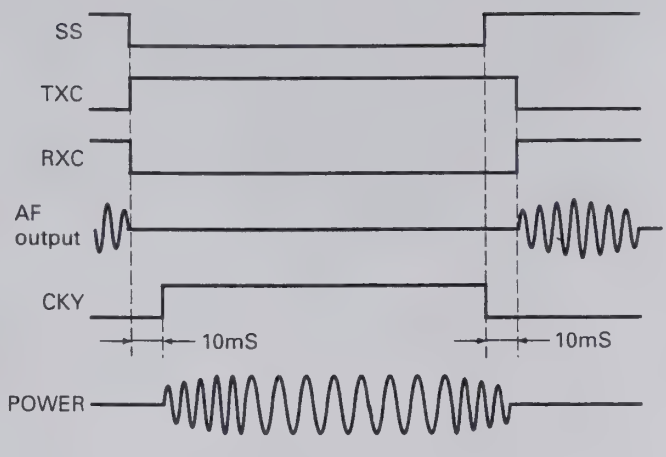

By full break-in

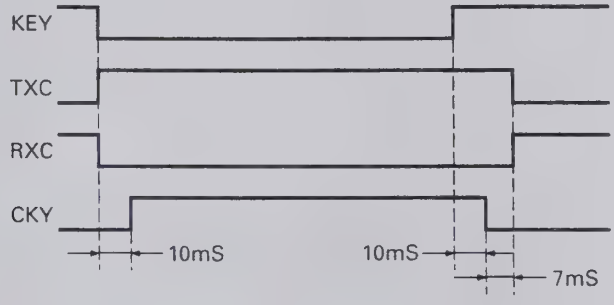

by semi break-in

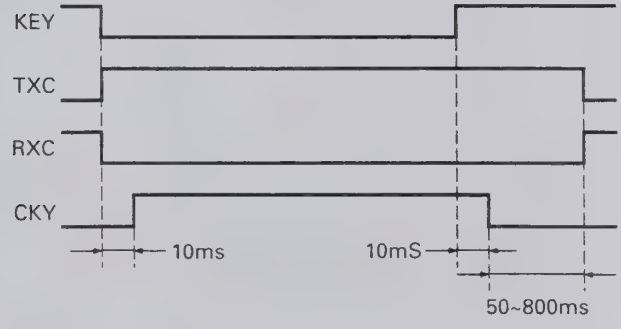

Fig. 10 Transmit/receive signal timing chart

CIRCUIT DESCRIPTION

Digital Control Unit

The TS-870S digital control circuit has a multiple chip configuration centered around the main CPU (IC6 : M37702S4BFP), and consists of a 64K ROM (IC12 : 27C512RJLVC), an 8K RAM (IC8 : LC3564QME-10), and an extended I/O (IC16, IC22, IC23 : CXD1095Q). This circuit controls about 60 different input and about 80 different output signals.

Figure 11 is a digital control block diagram.

■ Address control

The main CPU operates in the microprocessor mode in which the external ROM is used. The memory is configured as shown in the memory map, and the main CPU A12 to A15 and D0 signals and IC14, IC17, IC18, and IC19 are used to generate a chip select (CS) signal to select and access an IC. (Figure 12)

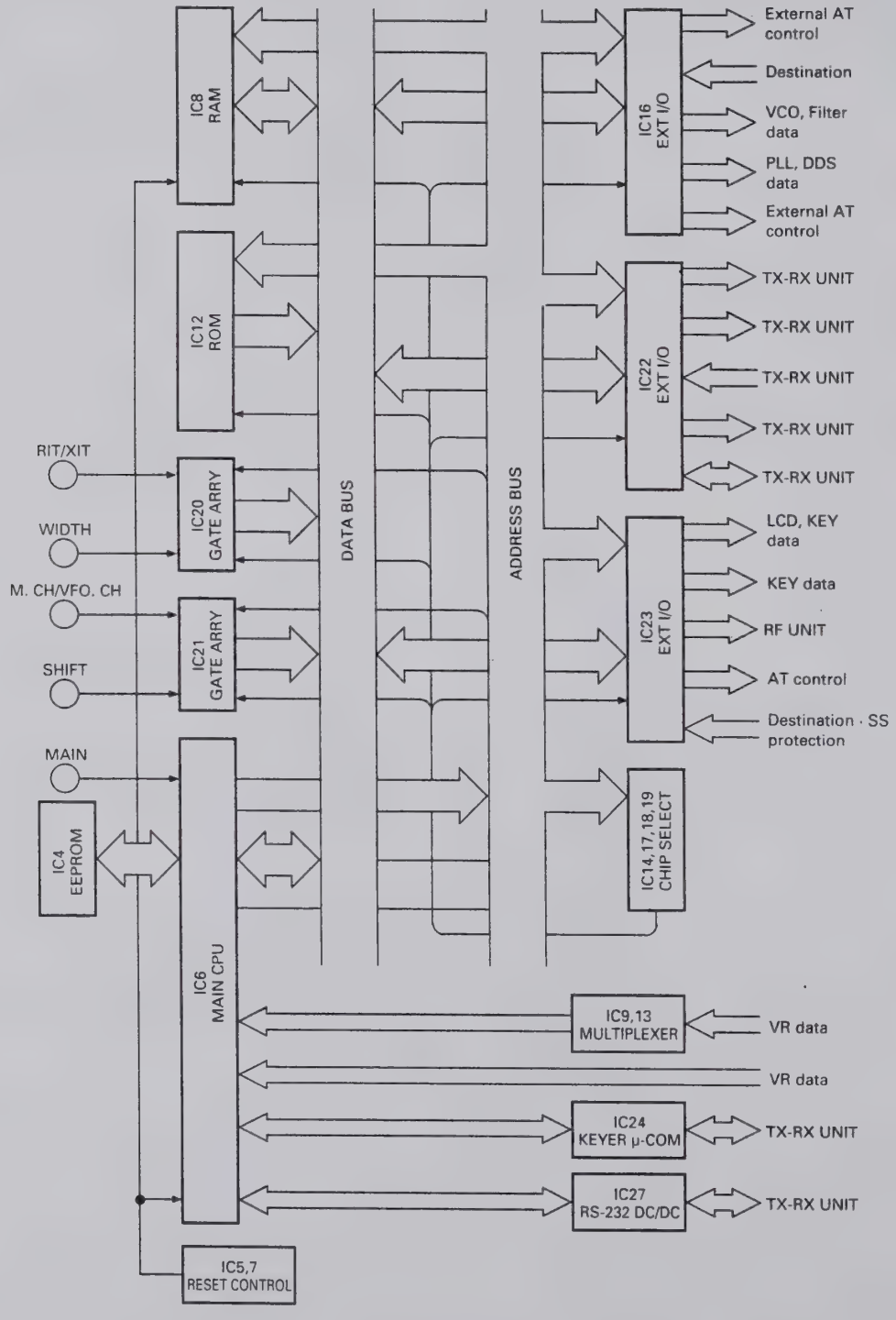

Fig. 11 Digital control block diagram

CIRCUIT DESCRIPTION

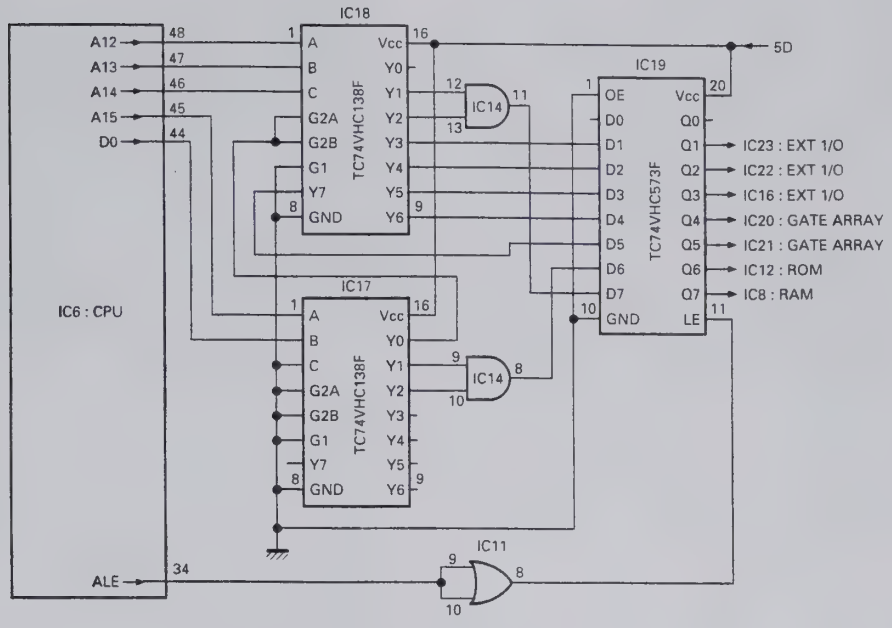

Fig. 12 Address control circuit

■ Encoder circuit

The main encoders are magnetic rotary encoders, and the click, RIT, SHIFT, and WIDTH encoders are contact-type rotary encoders.

The main encoder pulses are read directly by the main CPU.

The other encoder pulses enter the gate array (IC20 and IC21 : LZ92K371), and are read through the main CPU data bus. The gate array is selected by the latch (IC19 : TC74VHC573F) Q4 and Q5. The CK1, CK2 or CK3, CK4 encoder is selected by A0 of the gate array. Encoder data is output to D0 to D7 by making the read signal (RD) LOW when the chip select (CS) signal is LOW. IC25 and IC26 absorb encoder pulse chattering. (Figure 13)

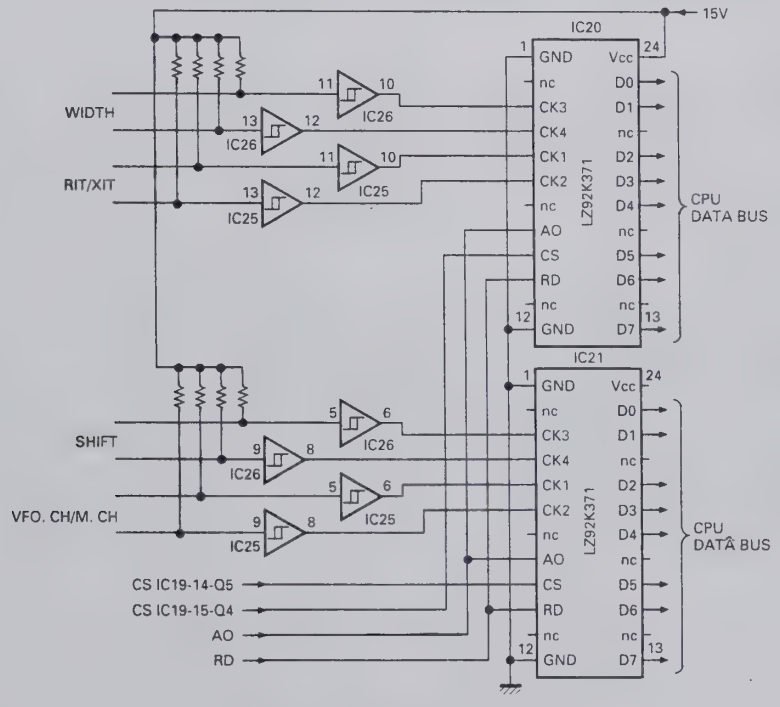

Fig. 13 Encoder circuit

CIRCUIT DESCRIPTION

■ System reset and RAM backup

The power monitor circuit (Q1, Q2, D4, D5, R6) monitors the power supply voltage. If the voltage is LOW, the circuit outputs a LOW signal to the INT1 port of the main CPU and the IRQ2 port of the microprocessor in order for the electronic keyer to stop operation. At the same time, the battery backup IC (IC5 : MB3780A) backs up the RAM with a lithium battery.

If the power supply voltage becomes normal, a HIGH signal is input to the INT1 port and the IRQ2 port, and the main CPU is initialized by the battery backup IC after the time constant set by C56 and C57. The operation resumes and power is supplied to the RAM from the outlet. (Figure 14)

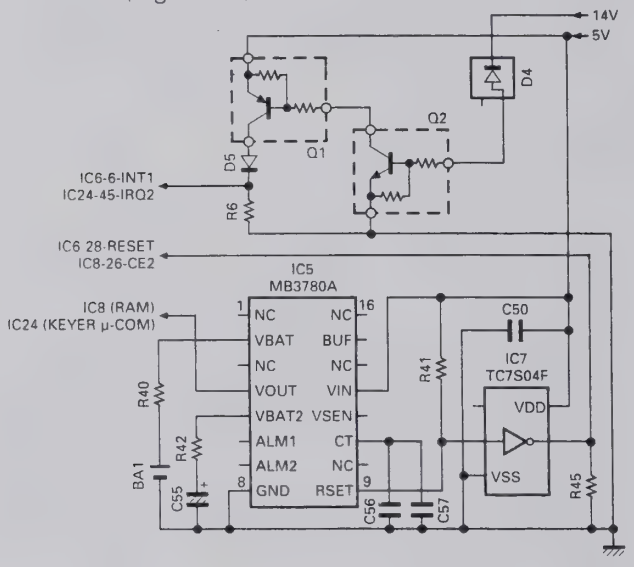

Fig. 14 System reset and RAM backup

■ Analog Signal Input

The main CPU incorporates an 8-channel analog-to-digital (A/D) converter, and in addition, has a multiplexer (IC9 and IC13 : TC4052BF) for entering 16-channel analog signals. Incoming analog signals are converted by the main CPU to digital values, which are used as digital data.

■ Display

Since the TS-870S uses a negative LCD and a fluorescent display tube.

The LCD is lighted with half a duty by the LCD driver, and the fluorescent display tube is lighted by an inverter.

The LCD driver data is set by the clock signal (UCK1), data signal (UDA1), and enable signals (ENL2, ENL3). The blanking signal (BLANK) turns the LCD driver OFF, and the dimmer signal (DIM) changes the inverter duty for dimmer.

■ Key scan

The PB0 and PB7 of IC23 and O2 to O8 of IC501 form a keyboard matrix. A key scan signal (a negative pulse) is output from the O2 to O8. One column corresponding to the PB0 and PB7 is selected, and the state of that switch is read. When the switch at the intersection of the matrix is pressed, the PBx port bit goes LOW. Thus, which switch is pressed can be detected. The key chattering is eliminated by software. (Figure 15)

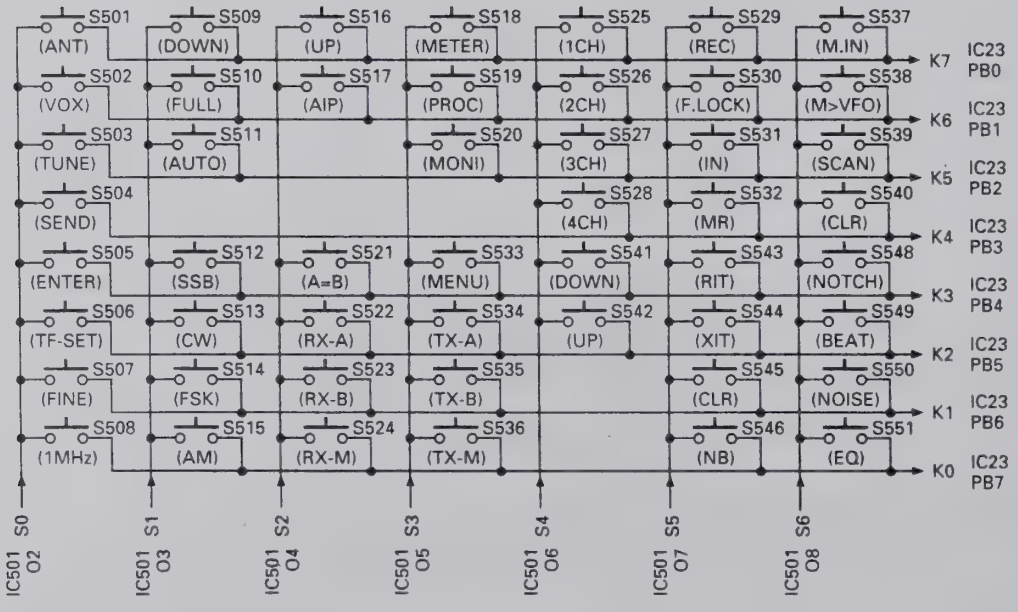

Fig. 15 Key scan circuit

CIRCUIT DESCRIPTION

■ PLL and DDS data

The TS-870S has three PLLs and three DDSs in the PLL section in the RF unit. The main CPU sends data to the PLL ICs and DDS ICs according to the displayed frequency. The PLL ICs provide unlock (UNL) signals. If one of the PLLs should unlock, the display indicates that the PLL is unlocked (Err-FE).

The TX-RX unit also has a PLL IC, to which the main CPU sends 46.32MHz data. The PLL IC also outputs an unlock signal (PLUL), and if a PLL is unlocked, an unlock message (Err-FD) is displayed.

■ AT control

The AT control inputs the variable capacitor position data (POD1, POD2, analog data input), forward wave voltage and reflected wave voltage (VSF, VSR, analog data input) for SWR calculation in the main CPU, and outputs the motor normal/reverse rotation control (PR11, PR12, PR21, PR22), motor speed control signal (SPED), and motor control switching signal (APRE).

SPED switches the motor rotation ON and OFF during AT tune and presetting by PWM with the duty cycle related to the SWR value.

APRE changes the motor normal/reverse rotation control to analog control for AT tune, and to digital control for presetting.

PR11 to PR22 control the motor normal/reverse rotations and stop when the motor normal/reverse control signal is controlled digitally. (Figure 16)

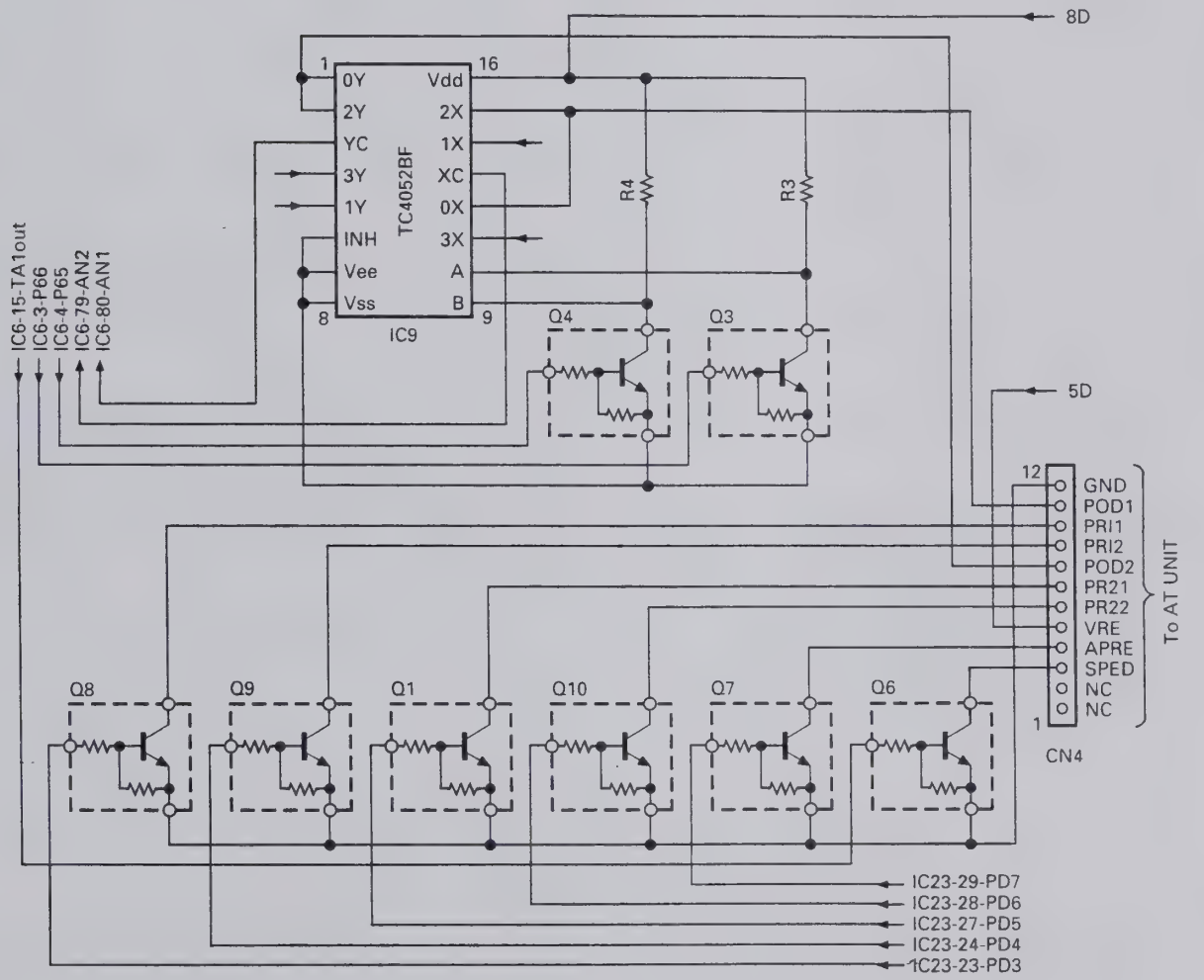

Fig. 16 AT control

CIRCUIT DESCRIPTION

■ IF filter switching

The IF filter switching signal from the control unit is controlled by PC0 to PC2 (pins 11 to 13) of IC23 and sent to the RF unit and final unit connection section.

The RF unit selects the 8.83MHz IF filter, and the final unit connection section selects the 455kHz IF filter.

The IF filter select signal is automatically interlocked with the WIDTH control.

SSB		CW		FSK		AM		FM	
WIDTH	IF FILTER	WIDTH	IF FILTER	WIDTH	IF FILTER	WIDTH	IF FILTER	WIDTH	IF FILTER
1.4k	3k	50	3k	250	3k	5.0k	6k	5.0k	15k
1.6k	↑	200	↑	500	↑	6.0k	15k	6.0k	↑
1.8k	↑	300	↑	1.0k	↑	8.0k	↑	8.0k	↑
2.0k	↑	400	↑	1.5k	↑	10.0k	↑	10.0k	↑
2.2k	↑	600	↑			12.0k	↑	12.0k	↑
2.4k	↑	1.0k	↑			14.0k	↑	14.0k	↑
2.6k	6k								
2.8k	↑								
3.0k	↑								
3.2k	↑								
3.4k	↑								
4.6k	↑								
6.0k	15k								

Table 9 IF filter selection

■ Receive band-pass filter selection

The RF BPF signal from the control unit is sent from PC6 (pin 17) of IC23 to the RF unit as serial data. The serial-to-parallel converter (TC9174F) in the RF unit converts serial data to parallel data and switches between band-pass filters.

■ Transmit low-pass filter selection

The LPF signal from the control unit is sent as serial data from PC1 (pin 12) of IC16 to the final unit filter section via the final unit connection section. The serial-to-parallel converter (TC9174F) in the final unit filter section converts serial data to parallel data and switches between low-pass filters.

■ PLL VCO data

The RF unit PLL section switches between VCOs according to the VCO band data (VB0 to VB3) output from PC4 to PC7 (pins 15 to 18) of IC16 in the control unit.

■ Electronic keyer

The TS-870S uses a dedicated IC (IC24 : 68HC05G2419553) to control the electronic keyer. The main CPU CH1 to CH4 signals switch operations to the electronic keyer IC (keyer microprocessor).

The keyer microprocessor controls the electronic keyer according to KEY SPEED VR data, DOT/DASH signal, and CH1 to CH4 signals switch operation signals from the main CPU.

The keyer microprocessor is normally at the standby mode (power save mode). Each control signal is connected to PB7 (pin 77). When this port is LOW, the standby mode is terminated.

When the standby mode is cancelled, PA7 (pin 30) outputs a HIGH signal. It is used to determine which control signal is active : CH1 to CH4, KEY SPEED VR data, or DOT/DASH signal.

PA2 (pin 25) is an input/output port that inputs KEY SPEED VR data and outputs control signal (HIGH) for VR data determination.

When a HIGH signal is output from PA2 (pin 25), C114 is charged. KEY SPEED VR data is calculated until C114 is discharged and the port goes LOW.

IRQ2 (pin 41) is an interrupt port that detects power supply voltage drop. When this port detects it, the standby mode is entered.

The keyer microprocessor outputs the key down and beep signals. The key down signal is input to IC22 (PC4 : pin 15), and the main CPU controls transmission and reception. The beep signal is input to IC29 (TC7S32F : OR gate) and output to the TX-RX unit as CKY.

The TX-RX unit determines the key jack ON/OFF and CKY level and outputs sidetone.

CIRCUIT DESCRIPTION

■ Band data

Frequency (MHz)		RF BPF (RB)		LPF	VCO				PLL	Frequency (MHz)		RF BPF (RB)		LPF	VCO				PLL
Lower limit	Upper limit	RX	TX		A	B	C	D	N	Lower limit	Upper limit	RX	TX		A	B	C	D	N
0.01	0.49	1	1	1	1	0	0	0	38	15.49	15.99	10	10	6	0	0	1	0	23
0.49	0.99	2	2						38	15.99	16.49								22
0.99	1.705								37	16.49	16.99								22
1.705	2.01	3	3						37	16.99	17.49								21
2.01	2.49			2					36	17.49	17.99								21
2.49	2.99	4	4						36	17.99	18.49								20
2.99	3.49								35	18.49	18.99								20
3.49	3.99								35	18.99	19.49								19
3.99	4.49	5	5						34	19.49	19.99								19
4.49	4.99			3					34	19.99	20.49								18
4.99	5.49								33	20.49	20.99								18
5.49	5.99								33	20.99	21.49	11	11						17
5.99	6.49								32	21.49	21.99	12	12		0	0	0	1	17
6.49	6.99								32	21.99	22.49			7					16
6.99	7.3	6	6						31	22.49	22.99								16
7.3	7.49	7	7						31	22.99	23.49								15
7.49	7.99			4	0	1	0	0	31	23.49	23.99								15
7.99	8.49								30	23.99	24.49								14
8.49	8.99								30	24.49	24.99								14
8.99	9.49								29	24.99	25.49								13
9.49	9.99								29	25.49	25.99			8					13
9.99	10.49								28	25.99	26.49								12
10.49	10.99	8	8	5					28	26.49	26.99								12
10.99	11.49								27	26.99	27.49								11
11.49	11.99								27	27.49	27.99								11
11.99	12.49								26	27.99	28.49								10
12.49	12.99								26	28.49	28.99								10
12.99	13.49								25	28.99	29.49								9
13.49	13.99								25	29.29	29.99								9
13.99	14.35	9	9						24	29.99	30								9
14.35	14.49	10	10						24										
14.49	14.99			6	0	0	1	0	24										
14.49	15.49								23										

CIRCUIT DESCRIPTION

■ Function of IC pins

1) CPU : M37702S4BFP (Control unit IC6)

Pin No.	Port name	Pin name	I/O	Function	Active level	Initial state
1	AN0	ADR0	I	VPRC, VMON, VAGC signal		
2	P67	RES	O	Reset signal output	L	H
3, 4	P66, P65	CTB, CTA	O	Analog switch select control signal B, A	H	H
5	INT2	PSW	I	Power switch inhibit signal	H	
6	INT1	BOVR	I	14V voltage drop inhibit signal		
7	INT0		I	Unused		
8, 9	TA4IN, TA4OUT	EDP1, EDP2	I	Main encoder pulse input		
10, 11	TA3IN, TA3OUT		O	Unused		L
12, 13	TA2IN, TA2OUT		O	Unused		L
14	P53	AMUT	I	AF mute signal	L	H
15	TA1OUT	SPED	O	AT motor speed control	L	H
16	P51	LCD	O	LCD and LED serial data		H
17	P50	LCK	O	LCD and LED serial clock		H
18	P47	BLK	O	LCD all off control signal	H	L
19	P46	RBK	O	RF mute signal	L	L
20	P45	14VSW	O	Power on control signal	H	H
21	P44	ECS	O	EEPROM clock		H
22	P43	EED	I/O	EEPROM data		
23	PHI			Unused		
24	RDY		I	Bus wait cancel	H	
25	HORD		I	Hold state cancel	H	
26	BYTE		I	External data bus width 8 bit setting	H	
27	CNVss		I			
28	RESET		I	Reset signal input	L	
29, 30	Xin, Xout		I	Clock signal input		
31	E		O			
32	Vss		I			
33	HLDA					
34	ALE		O			
35	BHE					
36	R/W		O	Read/write signal		
37~44	D7~D0		I/O	Bus		
45~60	A15~A0		O	Address output		
61~64	P87~P84	PB0~PB3	O	Logic key CPU control 0~3	H	L
65	TXD0	TXD0	O	Personal computer interface serial output		H
66	RXD0	RXD0	I	Personal computer interface serial input		
67	P81	RTS0	O	Personal computer interface RTS	H	L
68	CTS0	CTS0	I	Personal computer interface CTS		
69	Vcc		I			
70	AVcc		I			
71	Vref		I			
72	AVss		I			
73	Vss		I			
74	AN7	ADR7	I	Forward wave voltage (VSF)		
75	AN6	ADR6	I	Reflected wave voltage (VSR)		
76	AN5	ADR5	I	ALC meter analog input		
77	AN4		I	Unused		
78	AN3	ADR3	I	VPWR, VMIC, VDLY, VCAR signal		
79	AN2	ADR2	I	POD2, VRF, POD2, VAF signal		
80	AN1	ADR1	I	POD1, VNB, POD1, VSQL signal		

CIRCUIT DESCRIPTION

2) CPU : 68HC05G2419553 (Control unit IC24)

Pin No.	Port name	Pin name	I/O	Function	Active level	Initial state
1	VDD		I			
2~5	PB3~PB0		I	CH4 to CH1 switch input signal from IC6		
6~13	AD0~AD7		I	Unused		
14	VrefH			Unconnected		
15	VrefL		I			
16	Vss		I			
17	VDD		I			
18, 19	XOSC1, XOSC2		I	Unconnected		
20	RES		I	Reset signal input		
21, 22	OSC1, OSC2		I	Clock input		
23	PA0	DOT	I	DOT input		
24	PA1	DASH	I	Dash input		
25	PA2	SPEED VR	I/O	KEY VR data determine port		
26~29	PA3~PA6		I	Unused		
30	PA7	int contro	O	Inhibit determine control signal	H	
31~33	PG0~PG2		I	Unused		
34	TCMP		I	Unconnected		
35	PG4		I	Unused		
36	PG5	EBSY	I	Unused		
37	PG6	MBSY	I	Unused		
38	PG7		I	Unused		
39~44	PC0~PC5		I	Unused		
45	IRQ2	sleep	I	14V voltage drop determine inhibit port		
46	PC7		I	Unused		
47	VDD		I			
48	PD0		I	Unused		
49	PD1	mbusy	O	Message busy signal		
50	PD2		I	Unused		
51	PD3	pbc	O	Beep output signal		
52	PD4		I	Unused		
53	PD5	KEY	O	Key signal output		
54	PD6		I	Unused		
55	PD7		I	Unconnected		
56~59	PE0~PE3		I	Unused		
60	Vss		I			
61~64	PE4~PE7		I	Unused		
65~72	PH0~PH7		I	Unused		
73~76	PJ0~PJ3		I	Unused		
77	PB7	WAKE UP	I	Wake up inhibit		
78~80	PB6~PB4		I	Unused		

CIRCUIT DESCRIPTION

3) Extended I/O : CXD1095Q (Control unit IC16)

Pin No.	Port name	Pin name	I/O	Function	Active level	Initial state
1, 2	NC					
3~7	PB1~PB5	SHIMO1~SHIMO5	I	Destination determine port	H	
8	PB6	50W	I	50W switch signal	L	
9	PB7	UNL	I	Unlock signal	H	
10	Vss		I			
11	PC0	ENF1	O	Serial/parallel convert enable	H	L
12	PC1	UDA23	O	Serial/parallel convert data	—	L
13	PC2	UCK23	O	Serial/parallel convert clock		L
14	PC3	NFMT	O	Control signal except FM transmit mode	L	H
15, 16	PC4, PC5	VB3, VB2	O	VCO band data	H	L
17	PC6	VB1	O	VCO band data	H	H
18	PC7	VB0	O	VCO band data	H	L
19	NC					
20	PD0	PLE2	O	VCO2 enable	H	L
21	PD1	PLE1	O	VCO1 enable	H	L
22	PD2	PCK	O	PLL clock		L
23	PD3	PDA	O	PLL data		L
24	PD4		O	Unused		L
25	Vss		I			
26	VDD		I			
27	PD5	DLE3	O	DDS3 enable	H	L
28	PD^	DLE2	O	DDS2 enable	H	L
29	PD7	DLE1	O	DDS1 enable	H	L
30~32	D0~D2		I/O	Bus		
33, 34	NC					
35~39	D3~D7		I/O	Bus		
40	CLR		I	Port E output register clear	L	
41	ODEN		I	Output disable	L	
42	Vss		I			
43	WR		I	Write signal	L	
44	RD		I	Read signal	L	
45	CS		I	Chip select signal	L	
46~48	A0~A2		I	Address signal		
49	PE0	P TTI	I	External AT TT input	H	
50	PE1	P TSI	I	External AT TS input	H	
51	NC					
52	PE2	MBSY	I	Electronic keyer busy signal		
53	PE3		I	Unused		
54	PA0	P TTO	O	External AT TT output	H	L
55	PA1	P TSO	O	External AT TS output	H	L
56	PA2		O	Unused		L
57	Vss		I			
58	VDD		I			
59~62	PA3~PA6		O	Unused		L
63	PA7	LOGKEY	O	Electronic keyer reset	H	L
64	PB0	SHIMO0	I	Destination determine port	H	

CIRCUIT DESCRIPTION

4) Extended I/O : CXD1095Q (Control unit IC22)

Pin No.	Port name	Pin name	I/O	Function	Active level	Initial state
1, 2	NC					
3~9	PB1~PB7		I/O	DSP bus		
10	Vss		I			
11	PC0		I	Unused		
12	PC1	KEYS	I	Electronic keyer connecting determine signal	L	
13	PC2	MD	I	Microphone UP switch signal	L	
14	PC3	MU	I	Microphone DOWN switch signal	L	
15	PC4	KEYI	I	Key input signal	L	
16	PC5	PLUL	I	PLL unlock in DSP	L	
17	PC6	EOM	I	DRU-3 EOM signal	H	
18	PC7	VBSY	I	VS-2 busy signal	L	
19	NC					
20	PD0	DRST	O	DSP reset signal Normally "H"	L	H
21	PD1	VCEN	O	Electronic volume DAC enable	L	H
22	PD2	UCK22	O	Serial/parallel convert clock signal		L
23	PD3	UDA22	O	Serial/parallel convert data signal		L
24	PD4	DREN	O	DRU-3 enable signal	L	H
25	Vss		I			
26	VDD		I			
27	PD5	PLEN	O	PLL enable in DSP	H	L
28	PD6	STR	O	VS-2 start signal	H	L
29	PD7		O	Unused		L
30~32	D0~D2		I/O	Bus		
33, 34	NC					
35~39	D3~D7		I/O	Bus		
40	CLR		I	Port E output register clear	L	
41	ODEN		I	Output disable	L	
42	Vss		I			
43	WR		I	Write signal	L	
44	RD		I	Read signal	L	
45	CS		I	Chip select signal	L	
46~48	A0~A2		I	Address signal		
49	PE0	HENA	O	DSP enable A	L	H
50	PE1	HENB	O	DSP enable B	L	H
51	NC					
52	PE2	HRW	O	DSP R/W signal		H
53	PE3		O	Unused		L
54~56	PA0~PA2		O	DSP address signal		L
57	Vss		I			
58	VDD		I			
59	PA3		O	Unused		L
60	PA4	P BEEP	O	Beep output signal	H	L
61	PA5	P CKY	O	Transmit output control signal	H	L
62	PA6	P RXC	O	Receive control signal	H	H
63	PA7	P TXC	O	Transmit control signal	H	L
64	PB0		I/O	DSP bus		

CIRCUIT DESCRIPTION

5) Extended I/O : CXD1095Q (Control unit IC23)

Pin No.	Port name	Pin name	I/O	Function	Active level	Initial state
1, 2	NC					
3~9	PB1~PB7	P K1~P K7	I	Key matrix input	L	
10	Vss		I			
11	PC0	6KFIL	O	Analog filter select signal	H	L
12	PC1	3KFIL	O	Analog filter select signal	H	H
13	PC2	15KFIL	O	analog filter select signal	H	L
14~16	PC3~PC5	P ENR3~P ENR1	O	RF serial/parallel convert enable	H	L
17	PC6	P UDA21	O	Serial/parallel convert data		L
18	PC7	P UCK21	O	Serial/parallel convert clock		L
19	NC					
20~22	PD0~PD2		O	Unused		L
23	PD3	P APRE	O	AT motor control signal		L
24	PD4	P PR22	O	AT motor 2 control signal		L
25	Vss		I			
26	VDD		I			
27	PD5	P PR21	O	AT motor 2 control signal		L
28	PD6	P PR12	O	AT motor 1 control signal		L
29	PD7	P PR11	O	AT motor 1 control signal		L
30~32	D0~D2		I/O	Bus		
33, 34	NC					
35~39	D3~D7		I/O	Bus		
40	CLR		I	Port E output register clear	L	
41	ODEN		I	Output disable	L	
42	Vss		I			
43	WR		I	Write signal	L	
44	RD		I	Read signal	L	
45	CS		I	Chip select signal	L	
46~48	A0~A2		I	Address signal		
49	PE0	P THP	I	Thermal protection signal	H	
50	PE1	P SS	I	Microphone PTT switch signal	L	
51	NC					
52	PE2		I			
53	PE3		O	Unused		L
54	PA0	P DIM	O	Dimmer control signal	H	H
55, 56	PA1, PA2	P ENL3, P ENL2	O	LCD driver enable signal	H	L
57	Vss		I			
58	VDD		I			
59	PA3	P LATC	O	AT LED	H	L
60, 61	PA4, PA5	P ENL1, P ENL4	O	Switch serial/parallel convert enable	H	L
62, 63	PA6, PA7		O	Unused		L
64	PB0	P K0	I	Key matrix input	L	

CIRCUIT DESCRIPTION

TX-RX Unit (DSP Operation)

■ Outline

The TS-870S uses the DSP to carry out various processing as compared with the conventional models. They include the following:

- Modulation and demodulation
- Filter processing
- AGC processing (S-meter data output)
- Mic amplifier AGC processing
- VOX processing
- Voice equalizing processing
- Noise processing (noise reduction, beat cancel, automatic notch)
- Speech processing (COMP meter data output)
- Squelch processing
- Sidetone and beep generation

The commands and data for the microprocessor are listed below (see page 42).

The TX-RX unit circuits are divided into the analog section that processes analog signals and digital section that processes digital data. The interface between the analog and digital sections is the analog-to-digital converter (IC25 : AK5340-VS) and digital to analog converter (IC16 and IC27 : AK4318-VS, IC34 : PCM69AU).

The unit has another digital to analog converter (IC26 : M62363FP) for VCA (electronic volume : M51131L) control. The volume is controlled directly by the microprocessor in the control unit (the volume is not controlled by the DSP).

■ Digital section

The digital section is explained below. Figure 17 is a digital section block diagram.

The digital section consists of two DSPs (IC1 and IC2 : DSP56002FC40), RAM (IC7 : MCM56824AFN2*), three ROMs (IC4, IC5, IC6 : 27C256PCJJ**), and gate array (IC3 : MBCG24173-6173) and PLD (IC9 : 7032LC44JLQ*). The TX-RX unit has a PLL, but it is included in the digital section for convenience. * indicates the version number.

The PLL in the TX-RX unit is controlled directly by the microprocessor in the control unit, and clocks of a fixed frequency of 46.32MHz are generated. This circuit forms a VCO consisting of Q8 : 2SK210(GR), Q9 and Q10 : 2SC2714(Y). Q8 is an oscillator and Q9 and Q10 are buffer amplifiers. Q5, Q6, and Q7 comprise an active low-pass filter. This low-pass filter converts the output from PLL IC IC15 : MB86001PF to DC voltage and sends it to the VCO.

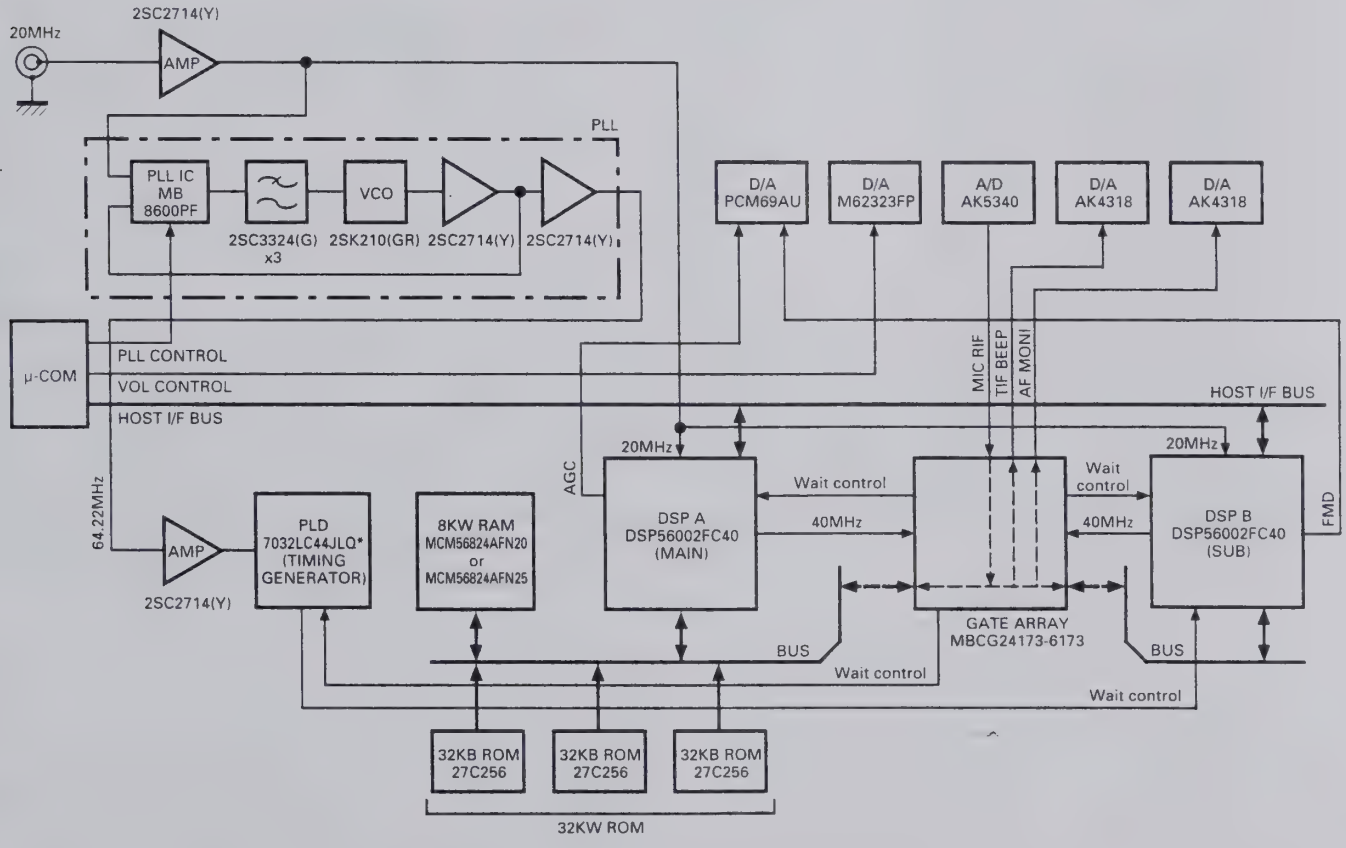

Fig. 17 Digital section block diagram

CIRCUIT DESCRIPTION

Figure 18 is a block diagram of the PLD (Programmable Logic Device). The clock with a sampling frequency fs (45.234375kHz) is generated from the 46.32MHz clock produced by the PLL in the TX-RX unit by the clock divider in the PLD. This clock is used for data transmission and reception between the analog-to-digital and digital to analog converters and gate array and data transmission and reception between the gate array, DSP, and the analog to digital and digital to analog converters. The PLD forms part of the bus control circuit for sharing the RAM and ROM with two DSPs and the circuit that accesses the ROM.

The gate array is used as the interface between the analog to digital and digital to analog converters and the DSP. Data is received from the analog to digital converter, or transmitted to the digital to analog converter, and each DSP is interrupted in the 1/fs sampling intervals. The gate array interfaces two DSPs for communication, and the two other DSPs control the bus for sharing the RAM and ROM.

The DSP has a 24 bit fixed-decimal DSP. It operates with the 40MHz clock, but the external 20MHz clock is given to the DSP. The DSP operates the 40MHz clock generated in the PLL in the IC. The clock is programmed to be output to pin 123 (CKOUT) of the DSP. Transfer of commands with the microprocessor is carried out through the host interface of the DSP.

The ROM and RAM are shared by two DSPs. When one of the DSPs is being accessed, the other DSP waits. It is carried out by the gate array and PLD. Three 8 bit ROMs are used to implement 24 bits.

The analog to digital converter (IC25 : AK5340-VS) is an 18 bit Δ-Σ type ADC for audio equipment. There are two channels, R and L. The R channel is used for the receive signal and the L channel is used for the microphone input signal. The digital to analog converter (IC16 and IC27 : AK4318-VS) is a 18 bit Δ-Σ type DAC for audio equipment. The digital to analog converter has two channels like the analog to digital converter : IC16 uses the R channel for the beep signal and the L channel for the transmit signal, and IC27 uses the R channel for the monitor signal and the L channel for the decode signal. Another digital to analog converter (IC34 : PCM69AU) is an 18 bit DAC for audio equipment, and uses the Rch for AGC and the L channel for audio signals in FM.

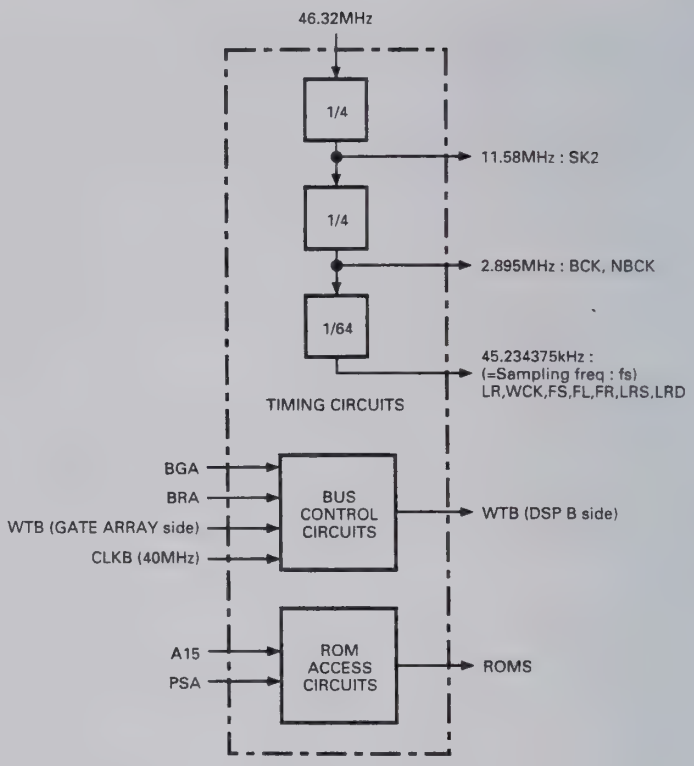

Fig. 18 PLD block diagram

■ Flow of transmit/receive signals

Flow of transmit/receive signals is explained below, together with the analog and digital sections. Flow of receive signals is explained first. See Figure 19.

The receive signal input from pin 3 (RIF) of CN1 is amplified by IC43 : NJM5532M. If a HIGH signal is input to RIF, its amplitude is limited to prevent any signal that exceeds the input range to the analog to digital converter (IC25 : AK5340-VS). The signal is passed through the band-pass filter and buffer amplifier, and its frequency is converted by the mixer (IC18 : MC74HC4053F). The frequency of the receive signal is about 1/4 of sampling frequency fs. The fs/4 frequency is the most stable frequency for digital signal processing. The receive signal of the fs/4 frequency is passed through the buffer amplifier, amplified by amplifier IC21 : NJM4560M, and converted to digital data by the analog to digital converter (IC25).

CIRCUIT DESCRIPTION

This data is read into the gate array (IC3 : MBCG 241873-6173) in sampling intervals 1/fs. The data read into the gate array is fed to the DSP in 1/fs for processing. DSP A (IC1 : DSP56002FC40) carries out auto notching, demodulation, noise processing, and squelch processing, and DSP B carries out AGC and filter processing.

AGC data, one of the DSP B operation results, is sent to the digital to analog converter (IC34 : PCM69AU) from pin 33 of DSP B (IC2: DSP56002 FC40) in 1/fs intervals. AGC data is converted to an analog current by IC34, and converted to an analog voltage by the I-V converter IC35 : AD822AR, and is output to the RF unit as the AGC voltage. The AGC voltage is reversed by the reversing amplifier IC35 : AD822AR, and the S-meter voltage used for packet communication is generated and output from the SMET terminal of ACC2 (J5).

The digital data demodulated by two DSPs is sent to the gate array in 1/fs intervals. The data is sent to the digital to analog converter (IC27 : AK4318-VS) from pin 68 of the gate array in 1/fs intervals and converted to an analog signal. The demodulate signal converted to an analog signal is passed through the third low-pass filter IC28 : NJM2100M. This low-pass filter eliminates the alias components. The demodulate signal then enters the VCA (IC29 : M51131L). The VCA attenuates and outputs the demodulate signal according to the voltage given to pin 8 of IC29. The voltage at pin 8 is the voltage corresponding to the rotational angle of the AF VOL, and is controlled by the microprocessor in the control unit. The demodulate signal is passed through the VCA, amplified by the AF amplifier (IC33 : LA4422), and output to the speaker and headphone.

Demodulation data used for packet communication is passed through low-pass filter IC28 : NJM2100M, then attenuated by the VCA IC31 : M51131L. The attenuation amount is determined by the value set on the menu. The signal is passed through the VCA and ACC2 (J5) through the buffer amplifier Q17 : 2SC 2412K(S), and output to the TNC.

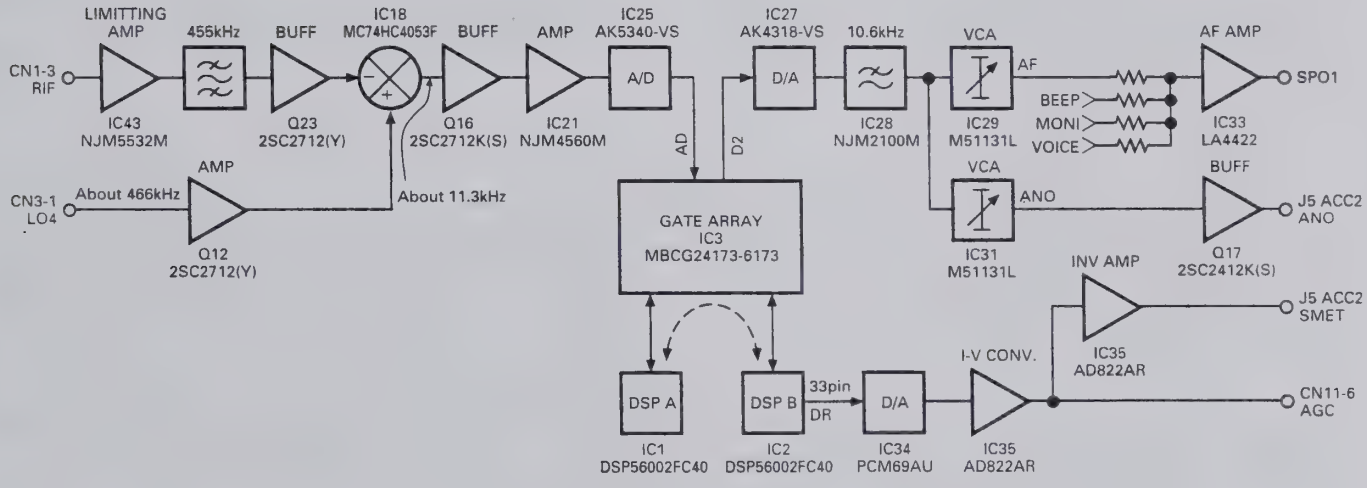

Fig. 19 Flow of receive signal

CIRCUIT DESCRIPTION

Then, flow of transmit signals is explained below. See Figure 20. If the mode is SSB, FM, or AM, the signal from the microphone is input. The signal enters the TX-RX unit through CN4. The signal is amplified by amplifier IC22 : AD822AR, and goes to the multiplexer (IC23 : MC74HC4052F). The multiplexer is used to switch between the microphone signal, the play signal from the DRU-3 (option), and packet signal. The signal passing through the multiplexer is amplified by amplifier IC24 : NJM2100M, and converted to digital data by the analog to digital converter (IC25 : AK5340-VS). The data is read into the two DSPs in the same way as for the receive signal. In transmit mode, DSP A carries out modulation, speech processing, and carrier signal generation in CW, FSK, and FM modes, while DSP B carries out VOX processing, voice equalizing processing, preemphasis processing (in FM mode), and microphone amplifier AGC processing.

The DSP does not perform modulation in FM mode. The DSP sends a 455kHz carrier signal from pin 1 (TIF) of CN1, adds subtone to the carrier signal, preemphasizes sounds, and limits the amplitude. Preemphasized audio data is sent from pin 33 of DSP A (IC1 : DSP56002FC40) to the digital-to-analog converter (IC34 : PCM69AU) in 1/fs intervals, and converted to an analog current. The analog current is converted to the audio signal of the analog voltage by the I-V converter IC36 : NJM4560M. IC36 also serves as the third low-pass filter that eliminates the alias components of the audio signal. The analog audio data signal is output from pin 3 (FMD) of CN3 to the PLL section.

The data modulated by the two DSPs (including FM carrier data) is sent to the gate array in the process as the demodulated signal. The signal is sent from pin 60 of the gate array to the digital to analog converter (IC16 : AK4318-VS) in 1/fs intervals, and converted to an analog signal. The frequency of this signal is fs/4. The analog modulated signal is passed through the third low-pass filter IC17 : NJM2100M to eliminate alias components. The signal is converted to the 455kHz IF signal by the mixer (IC18 : MC74HC4053F) and two ceramic filters (CF2 and CF3), and output from pin 1 (TIF) of CN1.

Monitor data, one of the DSP operation results, is sent to the gate array in the same process as the demodulate signal. Like the demodulate signal, the signal is sent from pin 68 of the gate array to the digital to analog converter (IC27 : AK4318-VS), and converted to an analog signal. The analog sidetone signal is passed through the third low-pass filter IC30 : NJM2100M and attenuated by VCA (IC31 : M51131L). The attenuation is determined by the rotational angle of MONI VOL. The flow of the signal after passing through the VCA is the same as for the demodulate signal.

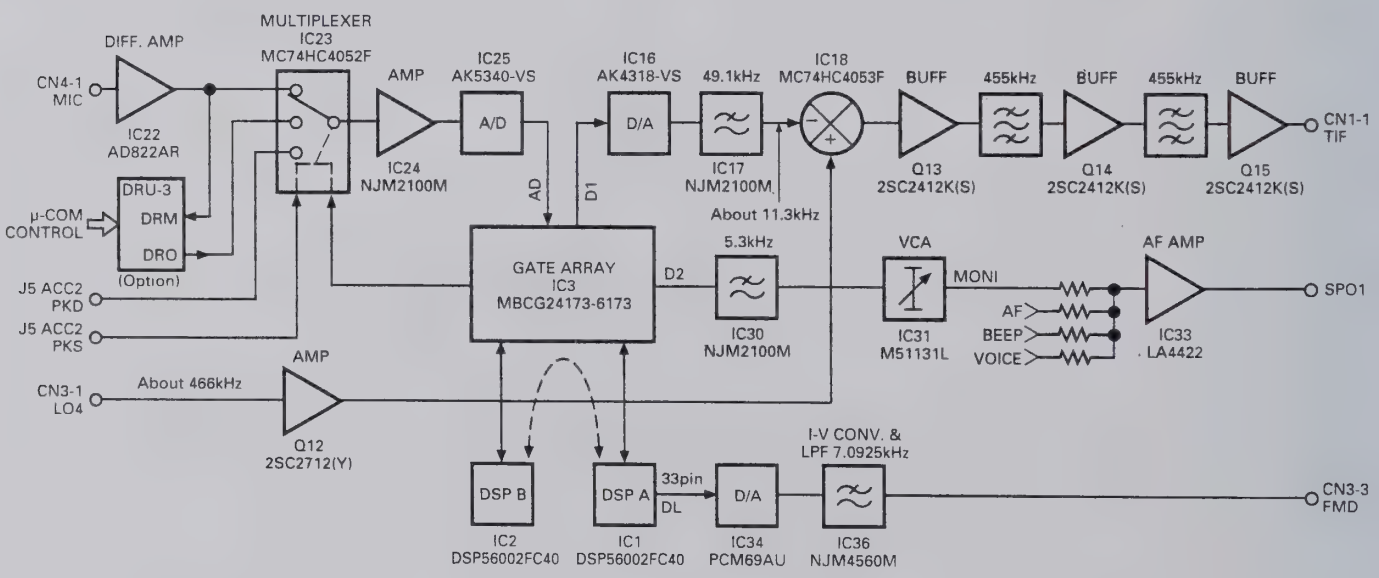

Fig. 20 Flow of transmit signal

CIRCUIT DESCRIPTION

■ Sidetone signal flow

When the electronic keyer is pressed, the sidetone is output. The sidetone is processed by DSP A. Sidetone data, a DSP A operation result, is output to the speaker or headphone in the same process as the monitor data. See Figure 21.

■ FSK tone signal flow

The flow of the FSK tone signal is the same as that of the sidetone. See Figure 21.

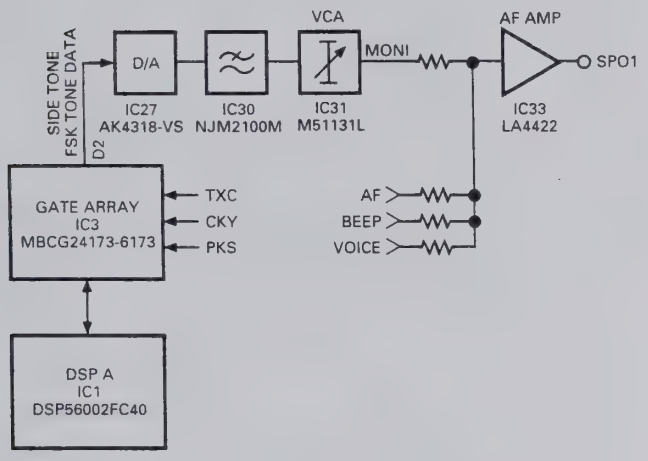

Fig. 21 Sidetone and FSK tone signal flow

■ Beep signal flow

When pin 6 (BEEP) of CN7 goes HIGH, DSP A sends beep data to the gate array in the same process as the demodulate signal. Like modulation data, the signal is sent from pin 60 of the gate array to the digital to analog converter (IC16 : AK4318-VS) in 1/fs intervals, and converted to an analog signal. The analog beep signal is passed through the primary low-pass filter IC19 : NJM4560M, and attenuated by VCA (IC29 : M51131L). The attenuation is determined by the value set on the menu. The flow of the signal after passing through the VCA is the same as for the demodulate signal.

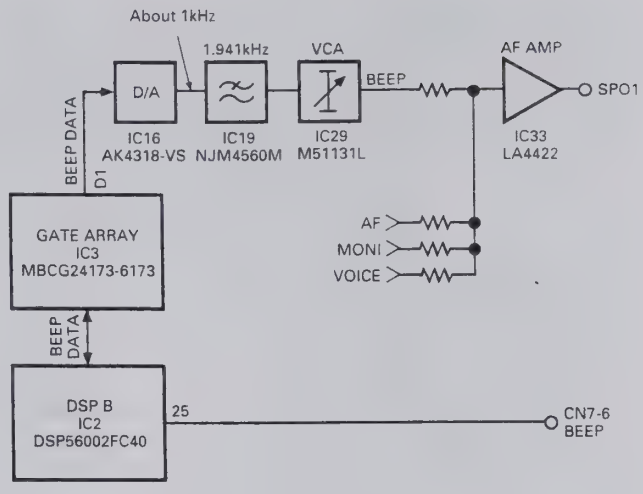

Fig. 22 Beep signal flow

■ DRU-3 recording and playback

The DRU-3 is controlled by the microprocessor in the control unit. During the DRU-3 recording, the MIC signal amplified by the differential amplifier (IC22 : AD822AR) is input to the DRU-3, and recorded. During DRU-3 playback, the playback signal is input to the analog-to-digital converter by switching the multiplexer (IC23 : MC74HC4052F). When the DSP receives a command "VOX ON and DRU playback" from the microcomputer, pin 38 of DSP B (IC2 : DSP56002FC40) goes HIGH and the SS line goes LOW. When the SS line goes LOW, the microprocessor sets the transceiver to transmit mode. This operation does not occur at the playback sound level of the DRU-3. Even if no sound is recorded, the transceiver enters the transmit mode when a DRU playback command arrives while VOX is ON. See Figure 20.

■ VS-2 audio signal flow

The audio signal output from the VS-2 is not processed by the DSP. The signal is amplified by the AF amplifier, and output to the speaker or headphone. The VS-2 is controlled by the microprocessor. See Figure 23.

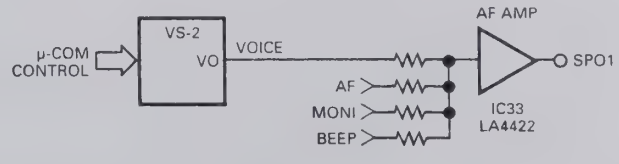

Fig. 23 VS-2 audio signal flow

CIRCUIT DESCRIPTION

■ Commands and data transferred to or from the microprocessor

To understand the DSP processing, the commands sent from the microcomputer to the DSP, and data sent from the DSP to the microcomputer are described below.

For details of error status, see the error list (Table 10).

1) Microprocessor → DSP

- Transmit mode
- Transmit filter
- CW rise (fall) time
- FSK shift width
- Squelch level
- Applicable filter follow speed
- SPAC interrelation time
- Check mode operation setting
- VOX delay time
- AGC release time
- TX AGC release time
- AGC correction
- TX equalizing
- FM modulation
- Processor compression level (LOW)
- Processor compression level (MID)
- Processor compression level (HIGH)
- RX AF AGC gain (AM/FM)
- RX AF AGC gain release time (AM/FM)
- TX AGC gain (packet input)
- Receive mode
- Receive filter
- CW pitch frequency
- FM subtone frequency
- Noise/interference elimination mode setting
- Auto notch follow speed
- Operation flag 1
- VOX gain
- RF gain (AGC)
- TX AGC gain
- AM modulation
- Carrier level
- Operation flag 2

2) DSP → Microprocessor

- S-meter data
- Compression level data
- Squelch status
- Microphone level data
- Error status
- Check mode status

Error No.	Error description
00	TX-RX unit is not connected.
01	Main DSP stack error
02	Main DSP trace error
03	Main DSP software interrupt
04	Main DSP SSI reception
05	Main DSP SSI exceptional reception
06	Main DSP SCI reception
07	Main DSP SCI exceptional reception
08	Main DSP SCI transmission
09	Main DSP SCI line idle detection
0A	Main DSP NMI
0B	Main DSP invalid command detection
0C	Command cannot be transferred from the main DSP to the sub DSP.
10	RAM check error 1
11	RAM check error 2
12	Gate array check error
21	Sub DSP stack error
22	Sub DSP trace error
23	Sub DSP software interrupt
24	Sub DSP SSI reception
25	Sub DSP SSI exceptional reception
26	Sub DSP SCI reception
27	Sub DSP SCI exceptional reception
28	Sub DSP SCI transmission
29	Sub DSP SCI line idle detection
2A	Sub DSP NMI
2B	Reserved
2C	Reserved
2D	Sub DSP invalid command detection
2E	Reserved
F0	Main DSP timeover error
F1	Sub DSP timeover error
FD	PLL unlock (TX-RX unit)
FE	PLL unlock (RF unit PLL section)
FF	Temperature protection error

Table 10 Error list

CIRCUIT DESCRIPTION

■ New function circuit

The TS-870S noise processing, auto notch, line enhancer, SPAC, and beat cancel functions are characteristics of the DSP digital signal processing. These functions and other features are described below.

1) Auto notch

The auto notch corresponds to the IF filter used in the previous models. It is an adaptive filter, and emphasizes weak signals by tracking interfering signals automatically in the AGC loop (the reception gain increases). The notch filter has very good damping and frequency characteristics in the receiving bandwidth.

2) Beat cancel

The "beat cancel" corresponds to the AF filter used in the previous models. It also is an adaptive filter, and finds and removes beat components from the received signal. Unlike the notch filter, this filter removes multiple beats, but it does not emphasize weak signals even if the beat is canceled.

3) Noise reduction

The TS-870S uses a line enhancer or SPAC to reduce noise. One of these two functions should be assigned to the N.R. key on the front panel.

The line enhancer is an adaptive filter which does not attenuate the target signal, but attenuates only noise. If the conditions are not very bad, the S/N ratio can be improved greatly.

Select SPAC to improve the S/N ratio effectively. SPAC stands for "Speech Processing System by use of Auto Correlation function." It takes the periodical signal (target reception signal) and suppresses noise using the Auto Correlation function. Since SPAC takes reception signals with a certain time width, the signals become discontinuous and cause noise.

Since the auto notch, beat cancel, and line enhancer are adaptive filters, their characteristics change according to the input signal. If the automatic tracking is set to OFF on the menu when the filter effect is good under good signal conditions, the effect does not change even if the conditions turn bad.

4) VOX

DSP processes the correlation between the received signal and signal from the microphone, and carries out the conventional anti-VOX processing. Therefore, TS-870S does not have anti-VOX.

5) SSB modulation/demodulation

TS-870S uses the PSN modulation/demodulation used for TS-950 and subsequent models. With the increase in the DSP operation precision, the side-band suppression has been improved in a very wide bandwidth from 25Hz to 6kHz (80dB or more for modulation and 90dB for demodulation). The PSN method does not eliminate all group-delay distortion because the Hilbert converter uses an IIR filter. The TS-870S uses a linear phase shifter with a Hilbert converter containing an FIR filter. As the FIR filter can keep group delay constant, it does not cause group-delay distortion. However, as the group-delay itself increases, if the linear phase shifter is set to ON via the menu, a signal is transmitted several ms after a voice enters the microphone.

■ Analog section and other circuits

The analog section and other circuits were described in the flow of transmission and reception signals. This section describes the circuits that were not explained in the flow of transmission and reception signals.

1) Reference voltage circuit

Since TS-870S does not have a negative power supply, a 2.5V reference voltage, which is half the power supply voltage, is supplied to the OP amplifier to process analog signals linearly. Fig. 24 shows this circuit. 2.5V are produced by dividing the power supply voltage by R129 and R132. This voltage is provided to the circuitry through buffer amplifier IC19 or IC20.

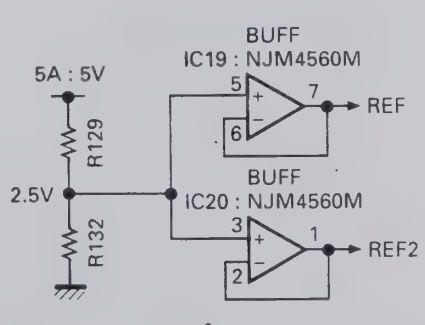

Fig. 24 Reference voltage circuit

CIRCUIT DESCRIPTION

2) Pop mute circuit

The mute circuit shown in Fig. 25 reduces the pop sound when the power is switched ON and OFF. If CN7 pin 16 AMUT is LOW, the mute circuit consisting of IC44 : TC7S04F and Q22 : DTC124EK mutes the AF amplifier (IC33 : LA4422) and suppresses the pop sound when the power is turned ON. A microprocessor controls AMUT and cancels muting at an appropriate time.

When the power is turned OFF, muting is also controlled by AMUT, but is done only if the power switch ON TS-870S is pressed. The circuit comprising Q25 : DTA143EK, Q26 : DTC124XK, and Q27 : DTC143EK suppresses the pop sound when the external power supply switch is turned OFF. When this switch is turned OFF, the voltage of the AF amplifier power supply 14A decreases. When the 14A voltage falls, Q25 becomes active (ON), and then Q26 becomes active (the collector goes LOW to mute the AF amplifier and suppress the pop sound. Q27 prevents muting when the voltage of the AF amplifier power supply 14A falls during transmission.

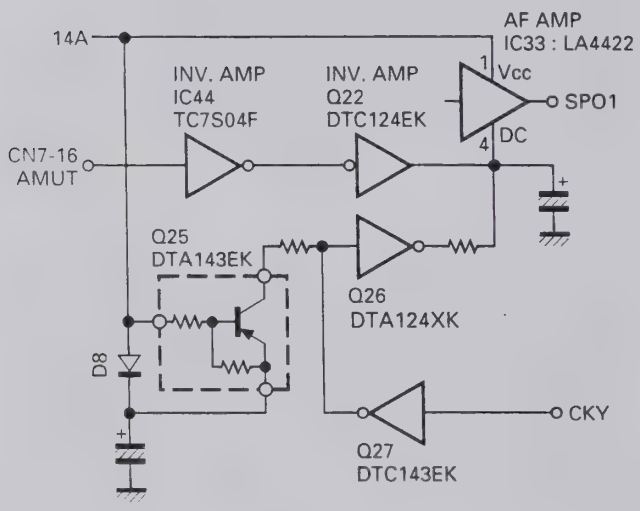

The TS-870S uses AF amplifier IC33: LA4422 pin 4 (DC) as the mute pin.

Fig. 25 Pop mute circuit

■ Transmit/receive frequency characteristics correction circuit

The transmission sound quality has a flat frequency characteristic due to DSP modulation. However, the low-frequency range is also flat to the cut-off frequency, so the model has less clarity compared to the conventional transceivers. A correction circuit is provided to suppress the low-frequency range. It consists of R141, R155, and C145 in the TX-RX unit, and it is –2dB at 300Hz for 1kHz.

To return to the flat frequency characteristic, remove C145 and replace R155 with a 1.8kΩ resistor. (See Figure 26.)

The receive frequency is also flat, as well as the hi-fi sound quality when the filter is widened. When the receive frequency is flat, the volume of the low-frequency range becomes insufficient, so a correction circuit that slightly emphasizes the low-frequency range is provided. It consists of R204, R205, R208, and C208 in the TX-RX unit, and it is +2dB at 1kHz for 3kHz.

To return to the flat frequency characteristic, remove R205. (See Figure 26.)

Transmit side

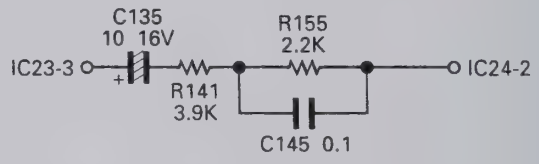

Receive side

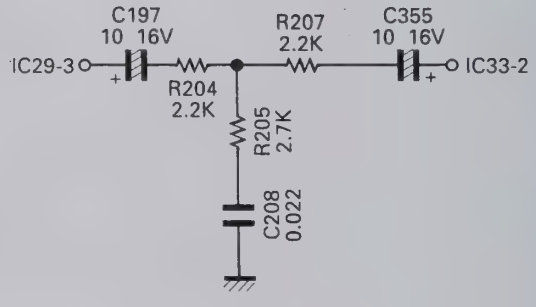

Fig. 26 Transmit/receive frequency characteristics correction circuit

DESCRIPTION OF COMPONENTS

RF UNIT (X44-3210-00) (A/9) : RF

Ref. No.	Use/Function	Operation/Condition
Q1	Switching	On when exit RX on.
Q2	Switching	On when TX.
Q3	Switching	Off when ATT1 or ATT2 on.
Q5	TX RF amplifier	Drive output (TX frequency)
Q6	Switching	DATT on
Q7	Switching	1/2 : 30kHz~490kHz 2/2 : 490kHz~1.62MHz
Q8	Switching	1/2 : 1.62MHz~2.49MHz 2/2 : 2.49MHz~3.99MHz
Q9	Switching	1/2 : 3.99MHz~6.99MHz 2/2 : 7.30MHz~10.49MHz
Q10	Switching	1/2 : 6.99MHz~7.30MHz 2/2 : 13.99MHz~14.49MHz
Q11	Switching	1/2 : 20.99MHz~21.49MHz 2/2 : 21.49MHz~30.00MHz
Q12	Switching	1/2 : 14.49MHz~20.99MHz 2/2 : 10.49MHz~13.99MHz
Q13	RF amplifier	21.49MHz~30.00MHz
Q14, 15	RF amplifier	30kHz~21.49MHz
Q16	Amplifier	LO1 : 73.08MHz~103.05MHz
Q17~20	Mixer	$f_{LO1} - f_{RF} = 73.05MHz$
Q21	Ripple filter	14S
Q22	Amplifier	73.05MHz
Q23	Mixer	73.05MHz – 64.22MHz = 8.83MHz
Q24	Amplifier/AGC	73.05MHz
Q26, 27	Mixer	73.05MHz – 64.22MHz = 8.83MHz
Q28	Amplifier	8.83MHz
Q29~31	Amplifier/AGC	8.83MHz
Q32	AGC	NB (Noise blanker)
Q33	Amplifier/AGC	8.83MHz
Q35, 36	Mixer	73.05MHz → TX f
Q37, 38	Mixer	8.83MHz → 73.05MHz
Q39	Amplifier	TX IF
Q42	Switching	RF blanking
Q43, 44	DC amplifier	ALC
Q45, 46	Switching	On when AM mode.
Q47	DC amplifier	ALC
Q48	Switching	On when AM transmission mode.
Q49	Switching	
Q50	DC amplifier	ALC amplifier
Q51	Switching	Pulse generate when AM transmission mode.
Q52	DC amplifier	ALC amplifier
Q54	Switching	Off when NB.
Q55	Switching	Make relay for linear.
Q56	Switching	On when TX.
Q57, 59	Switching	TXB generate
Q58, 60	Switching	RXB generate
Q61	Switching	On when AIP off (0~21.49MHz).
Q62	Switching	On when AIP off (21.49~30MHz).
Q63	Switching	On when AIP off.
Q64	Switching	On when AIP on.
Q65	Switching	12V when RX.
Q66	Switching	On when RX.
Q70, 71	Switching	CKY
IC1	Serial/Parallel conversion	BPF selection
IC2	Serial/Parallel conversion	
IC6	OP amplifier	ALC meter
IC7	DAC	8 ch
IC8	Meter amplifier	VSF, VSR, ALC and Processor.

DESCRIPTION OF COMPONENTS

Ref. No.	Use/Function	Operation/Condition
IC9	Comparator	NB pulse
IC10	AVR	8V → 5V
D1~3	Relay surge absorption	
D4~7	Large input protection	
D8	RF switch	On when RX.
D10	RF switch	On when TX.
D11~33, 35	RF switch	BPF switch
D36, 37	RF switch	On when AIP on.
D38, 39	RF switch	ON when 21.49MHz or more RF amplifier selection.
D40, 41	RF switch	On when 21.50MHz or less RF amplifier selection.
D42	RF switch	
D43	RF switch	LO2 (64.22MHz) switch
D46	RF switch	Noise detection
D47	RF switch	TGC voltage control
D49	RF switch	Gain control
D50	Zener diode	−6.2V stability
D51	LED	Voltage generate
D52	Zener diode	12V (ALC voltage for linear)
D53	Switch	Pulse generate
D54	Reverse current prevention	
D55	Zener diode	3V (Voltage shift)
D56	Switch	ALC
D57	LED	CKY
D58	Relay surge absorption	
D59	Reverse current prevention	RBK
D60	RF switch	On when 29MHz.
D61	RF switch	On when AIP on.
D62	RF switch	On when RX.
D63, 64	RF switch	8.83MHz filter changeover (15kHz).
D65, 66	RF switch	8.83MHz filter changeover (3kHz).
D67	RF switch	8.83MHz filter changeover (6kHz).
D68	RF switch	On when TX.
D69	RF switch	8.83MHz filter changeover (6kHz).
D70	Zener diode	6.2V (Voltage shift)
D71	Zener diode	4.7V (Voltage stability)
D72	Switch	CKY

RF UNIT (X44-3210-00) (B/9) : PLL

Ref. No.	Use/Function	Operation/Condition
Q500	Buffer	D/A buffer
Q501	Amplifier	20MHz (fSTD)
Q502	Mixer IC506 input buffer	5.46~4.46MHz
Q503	Buffer	D/A buffer
Q504, 505	Switching	Chopper
Q506	Buffer	Output for chopper
Q507	Amplifier	LO3 (8.375MHz)
Q508	Buffer	For LO3 output
Q510	Buffer	D/A buffer
Q511	Buffer	For LO4 output
Q512	Amplifier	REF 20MHz
Q513	Tripled circuit	fSDT x 3 = 60MHz
Q514, 515	Buffer	Reference oscillator 20MHz
Q516	VCO A changeover	
Q517	VCO B changeover	

DESCRIPTION OF COMPONENTS

Ref. No.	Use/Function	Operation/Condition
Q518	VCO C changeover	
Q519	VCO D changeover	
Q520	VCO A	73.08~80.54MHz
Q521	VCO B	80.54~87.54MHz
Q522	VCO C	87.54~94.54MHz
Q523	VCO D	94.54~103.05MHz
Q524	Buffer	VCO A~VCO D output (73.08~103.05MHz)
Q525	Mixer IC508 input buffer	73.08~103.05MHz
Q526	Buffer	For LO1 output
Q527	Active LPF	Comparison 1MHz
Q528, 529	Active LPF	
Q530	Amplifier	PLL IC IC507 input (18~48MHz)
Q531	Amplifier	18~48MHz
Q532	Amplifier	LO2A output (64.22MHz)
Q533	Switching	PLL unlock signal output ("H" : Unlock)
Q534~536	Active LPF	Comparison 20kHz (5kHz in FM mode)
Q537	Switching	FM modulation input on/off
Q539	Buffer	For LO2A outrput
Q800	Reference oscillator	Reference frequency 20MHz oscillation.
IC500	DDS	1.46~0.46MHz for LO1
IC501	DDS	1.625MHz for LO3
IC502	DDS	For LO4
IC503	Divider	20MHz x (1/5) = 4MHz
IC505	Mixer	1.46~0.46MHz → 5.46~4.46MHz
IC506	Mixer	5.46~4.46MHz → 54.54~55.54MHz
IC507	PLL	2~5 : Frequency division ratio input 6 : 18~48MHz input 9 : Lock voltage output 11 : Unlock output (Unlock : "L") 15 : 20MHz input
IC508	Mixer	73.05~103.05 + 54.54~55.54 = 18~48MHz
IC509	PLL	2~5 : Frequency division ratio input 6 : 64.22MHz input 9 : Lock voltage output 11 : Unlock output (Unlock : "L") 15 : 20MHz input
IC510	AVR	13.8V → +9V
IC511	AVR	13.8V → +9V low drop-out
D500	Vari-cap diode	VCO A
D501	Switching	VCO A output
D502	Vari-cap diode	VCO B
D503	Switching	VCO B output
D504	Vari-cap diode	VCO C
D505	Switching	VCO C output
D506	Vari-cap diode	VCO D
D507	Switching	VCO D output
D508	Reverse current prevention	Unlock signal detection

FINAL UNIT (X45-351X-XX) (A/5) : FINAL 0-00 : K,P,M,M2,X 2-71 : E,E2,E3,E9

Ref. No.	Use/Function	Operation/Condition
Q501	Pre-drive amplifier	Wide-band amplification of HF band
Q502, 503	Drive amplifier	Push-pull wide-band amplification of HF band
Q504	Drive bias supply	Temperature compensation of drive
Q505, 506	Final amplifier	Push-pull wide-band amplification of HF band
Q507	Final bias supply	Temperature compensation of final
D501	Temperature compensation	Temperature sensing of pre-drive
D502	Temperature compensation	Temperature sensing of drive
D503	Temperature compensation	Temperature sensing of final
D504	Reverse power connection protection	

DESCRIPTION OF COMPONENTS

FINAL UNIT (X45-351X-XX) (B/5) : FILTER

Ref. No.	Use/Function	Operation/Condition
Q1~5	Relay driver	
Q6	Switch	Antenna tuner through tune
Q10~16	Relay driver	
IC1	Band data decoder	
D1	High-frequency rectification	Reflected wave rectification
D2	High-frequency rectification	Forward wave rectification
D3	Voltage stabilization	5.1V
D4	Relay surge absorption	1.6~2.0MHz LPF relay
D5	Relay surge absorption	2.0~4.0MHz LPF relay
D6	Relay surge absorption	4.0~7.5MHz LPF relay
D7	Relay surge absorption	7.5~10.5MHz LPF relay
D8	Relay surge absorption	10.5~14.5MHz LPF relay
D9	Relay surge absorption	14.5~21.5MHz LPF relay
D10	Relay surge absorption	21.5~30.0MHz LPF relay
D11	Switching	

FINAL UNIT (X45-351X-XX) (C/5) : CONNECTION

Ref. No.	Use/Function	Operation/Condition
Q401~403	DC/DC	–6V
Q404	Ripple filter	14S → 14V
Q405	Ripple filter, AVR	
Q460, 461	Mixer	RX
Q470, 471	Mixer	TX
Q472, 475	Amplifier	TX IF
IC402	5V AVR	8V → 5V (For PLL)
D401	Rectification	
D402	Current stabilization	9V
D450	Reverse current prevention	
D451~456	RF switch	BPF switch
D457	Reverse current prevention	

FINAL UNIT (X45-351X-XX) (D/5) : AVR

Ref. No.	Use/Function	Operation/Condition
Q601	Switch	14S supply when power switch on.
Q701	Switch	On when fan operation
Q702, 703	Switch	Fan motor drive
IC601	8V AVR	13.8V → 8V (Analog 8V : 8A)
IC602	8V AVR	13.8V → 8V (Digital 8V : 8D)
IC701	Comparator	Fan control
D601	Relay surge absorption	
D701	Reverse current prevention	
D702	Surge absorption	

FINAL UNIT (X45-351X-XX) (E/5) : RELAY

Ref. No.	Use/Function	Operation/Condition
D301	Lightning surge protection	ANT1
D302	Lightning surge protection	ANT2
D303	Relay surge absorption	Antenna changeover relay
D304	Relay surge absorption	TX/RX changeover relay

DESCRIPTION OF COMPONENTS

AT UNIT (X53-3340-02)

Ref. No.	Use/Function	Operation/Condition
Q1, 2	Amplifier	Waveform shaping
Q3	Switching	On when APRE is "H".
Q4, 5	Switching	Motor speed control pulse
IC1	DFF	Phase difference detection
IC2	Analog switch	For control changeover motor 1
IC3	Analog switch	For control changeover motor 2
IC4	Motor drive	For motor 1
IC5	Motor drive	For motor 2
IC6	Comparator	Amplification difference detection
IC7	AVR	+5V
D1	Detector	Current component amplification detection
D2	Detector	Voltage component amplification detection
D3~8	Switching	Clipper
D10	Switching	Spike absorption
D101~103	Switching	Spike absorption
D105~108	Switching	Spike absorption
D109, 110	Switching	Band data

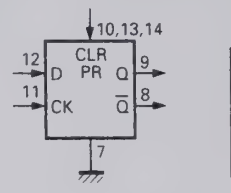

Function table

INPUTS		OUTPUTS	
CLOCK	D	Q	Q
↑	L	L	H
L	X	Qo	$\overline{Qo}$

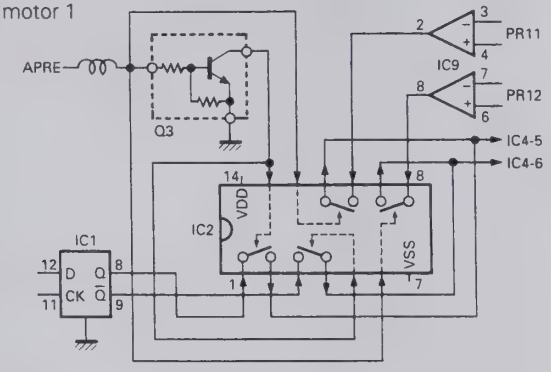

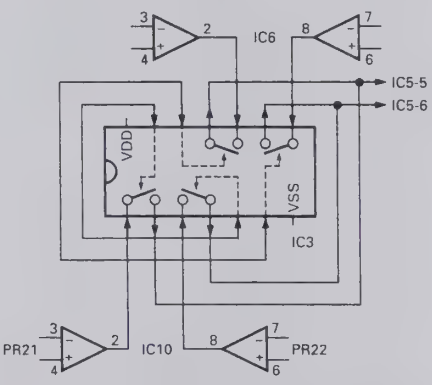

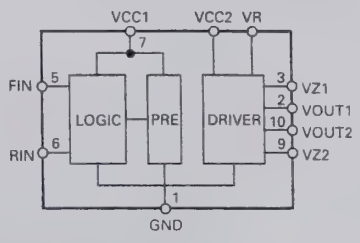

DESCRIPTION OF COMPONENTS

CONTROL UNIT (X53-356X-XX) (A/4) : CONTROL

0-11 : K,P 0-21 : M 0-22 : M2 0-71 : X 2-71 : E 2-72 : E2 2-73 : E3 2-74 : E9

Ref. No.	Use/Function	Operation/Condition
Q1, 2	Switching	Voltage drop changeover
Q3, 4	Switching	Multiplexer changeover
Q5	Switching	EEPROM write control changeover
Q6~11	Switching	AT control (PR11, PR12, PR21, PR22, APRE, SPED)
Q12, 13	Switching	AT-300 control and input (TS, TT)
Q14, 15	Switching	AT-300 control and output (TS, TT)
Q16	Switching	IC24 control (Reset)
Q17~19, 22	Switching	IC24 control (CH1, 2, 3, 4)
Q20, 24	Switching	IC24 control (DOT)
Q21, 23	Switching	IC24 control (DASH)
Q27	Switching	VBSY signal
Q28	Switching	KEY signal
Q29	Switching	Filter changeover (6kHz)
Q30	Switching	Filter changeover (3kHz)
Q31	Switching	Filter changeover (15kHz)
Q33	Switching	BLNK signal
IC1, 2	Regulator	5V output
IC3	Regulator	8V output
IC4	EEPROM	Adjustment data saving
IC5	Reset, Power supply changeover	System reset and Back-up power supply changeover
IC6	CPU	8 bit microcomputer (Main)
IC7, 10	Inverter	Reverse data
IC8	RAM	8K-byte
IC9, 13	Multiplexer	A/D data changeover
IC11	OR gate	RD/WR signal output
IC12	ROM	64K-byte
IC14	AND gate	Chip select combination for RAM and ROM
IC15	Bidirectional buffer	Data bus input/output changeover
IC16, 22, 23	Extended I/O	8 bit x 4, 4 bit x 1
IC17, 18	Decoder	Converts the address signal into a chip select signal for each IC.
IC19	Latch	Chip select signal latch
IC20, 21	Encoder gate array	Encoder pulse count
IC24	CPU	8 bit microcomputer (Electronic keyer)
IC25, 26	Schmitt trigger	Encoder chattering absorption
IC27	Level shift	RS-232 level shift
IC28	OP amplifier	Buffer
IC29	OR gate	CKY signal and BPC signal combination
D1~3	Protection diode	Power supply
D4	Voltage detector	Voltage drop detection (About 10V)
D5	Protection diode	Reverse current prevention
D6	Protection diode	KEYS line
D7	Protection diode	DASH line
D8	Protection diode	DOT line
D9	Protection diode	MD line
D10	Protection diode	MU line
D11	Protection diode	KEY line
D12	Protection diode	SS line

DESCRIPTION OF COMPONENTS

CONTROL UNIT (X53-356X-XX) (B/4) : SW

Ref. No.	Use/Function	Operation/Condition
Q501, 502	LED switch	
IC501~504	Serial/Parallel	Data conversion for tact switch and LED
D501, 502	LED	
D510~519	LED	

TX-RX UNIT (X57-4620-00)

Ref. No.	Use/Function	Operation/Condition
Q1	Switch	Change SS line to low when VOX active.
Q2	Amplifier	64.22MHz
Q3	Amplifier	REF 20MHz
Q4	Switch	On/Off when squelch open/close (For packet).
Q5, 7	Active LPF	
Q6	Active LPF	PLL loop filter
Q8	VCO	46.32MHz oscillation circuit
Q9, 10	VCO	Output buffer
Q12	Amplifier	LO4 466kHz
Q13, 15	Buffer	TX IF 455kHz
Q14	Amplifier	TX IF 455kHz
Q16	Buffer	Receive signal for DSP processing (11.3kHz)
Q17	Buffer	ACC2 audio output
Q22	Switch	Mute signal (Power on/off)
Q23	Buffer	RX IF 455kHz
Q25	Pulse generator	AF mute
Q26	Switch	Mute signal
Q27	Switch	Mute signal absorption (Mute inhibit when TX)
IC1	DSP A	Main DSP
IC2	DSP B	Sub DSP
IC3	Gate array	For interface
IC4	DSP ROM	Low (D0~D7) 32KB
IC5	DSP ROM	Mid (D8~D15) 32KB
IC6	DSP ROM	High (D16~D23) 32KB
IC7	DSP RAM	8K ward
IC9	PLD	Timing generator
IC15	PLL IC	46.32MHz clock generation
IC16	DAC	Rch : BEEP signal (About 1kHz) Lch : Transmission signal (11.3kHz)
IC17	Active filter	TX (fc = 49.1kHz) 3rd LPF
IC18	Mixer	RX : 455kHz → 11.3kHz TX : 11.3kHz → 455kHz
IC19	Voltage follower, Active LPF	Reference voltage buffer, BEEP LPF (fc = 1.9kHz)
IC20	Voltage follower	Reference voltage buffer
IC21	LPF, Buffer	RX IF 11.3kHz
IC22	Amplifier	Microphone amplifier, unbalanced/balanced modulation
IC23	Multiplexer	MIC, DATA, DRU-3 changeover
IC24	LPF, Buffer	TX microphone amplifier, unbalanced/balanced modulation
IC25	ADC	Rch : Reception signal Lch : Microphone input signal
IC26	DAC	VCA control
IC27	DAC	Rch : Monitor signal Lch : De-modulation signal
IC28	Active LPF	De-modulation signal (fc = 10.6kHz)
IC29	VCA (Electronic volume)	De-modulation signal, BEEP
IC30	Active LPF	Monitor signal (fc = 5.3kHz)
IC31	VCA (Electronic volume)	Packet AF, monitor
IC33	AF amplifier	Audio amplifier

DESCRIPTION OF COMPONENTS

Ref. No.	Use/Function	Operation/Condition
IC34	DAC	Rch : AGC signal Lch : FM modulation signal
IC35	I-V converter, Inverter	AGC and S-meter voltage
IC36	I-V converter, Active LPF	FM modulation signal (fc = 7.2kHz)
IC37	AVR	13.8V → Analog 5V
IC38	AVR	Digital 8V → Digital 5V
IC39	AVR	13.8V → 5V for PLL
IC40	AVR	13.8V → 8V for PLL
IC41, 42	Buffer	VCA control
IC43	Clipper amplifier	RX IF 455kHz
IC44	Inverter	Mute (Power on/off)
D1~4	Reverse current prevention	
D5	VCO bari-cap diode for DSP	64.32MHz oscillation
D7, 8	Reverse current prevention	

SEMICONDUCTOR DATA

PLL : MB86001PF (RF Unit IC507, 509, TX-RX Unit IC15)

■ Terminal connection diagram

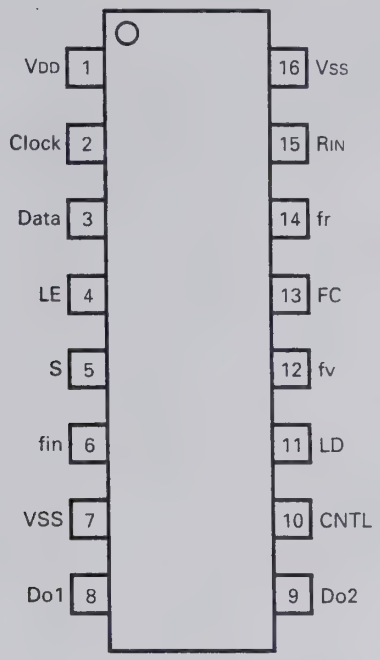

■ Terminal functions

Pin No.	Pin code	I/O	Function
1	VDD	–	Power supply pin.
2	Clock	I	Shift register clock input pin. Serial data is taken in at the rising edge of the clock signal. The input section contains a Schmitt trigger circuit.
3	Data	I	Serial data input pin for setting the divide ratio of each divider. The input section contains a Schmitt trigger circuit.
4	LE	I	Shift register load enable signal input pin. When LE is high, the divider ratio data is transferred to the latch specified by the control bit. This data is used as the divide ratio of each divider. The input section contains a Schmitt trigger circuit.
5	S	I	Switch pin for selecting the latch for setting the divide ratio of each divider. When the S pin is low, latch V1 is selected. When the S pin is high, latch V2 is selected. The divide ratio data is then sent to the divider.
6	fin	I	Divider input pin. The input section contains a bias circuit and an amplifier. Connect the voltage control oscillator (such as a VCO) by AC-coupling.
7	Vss	–	Ground pin.
8	Do1	O	Phase comparator output pin (charge pump). The Do1 output level can be reversed by FC The reference divider output fr and divider output fv are related as follows. On when CNTL is low. fr > fv : High level (FC : Low), Low level (FC : High), fr = fv : High impedance, fr < fv : Low level (FC : Low), High level (FC : High)
9	Do2	O	Phase comparator output pin (charge pump). The relationships between the reference divider output fr and divider output fv are the same as for Do1. On when CNTL is high.
10	CNTL	I	Pin that controls charge pump outputs Do1 and Do2. The relationships between CNTL, Do1 and Do2 are as follows. When CNTL is low, Do1 : Output, Do2 : High impedance. When CNTL is high, Do1 : High impedance, Do2 : Output.
11	LD	O	Phase comparator output pin. When PLL is locked, LD is high. When PLL is unlocked, LD is low.
12	fv	O	Divider division output monitor pin. A signal is output from the pin in monitor mode. Normally, this pin has high impedance.
13	FC	I	Phase comparator input switch pin.
14	fr	O	Reference divider division output monitor pin. A signal is output from this pin in monitor mode. Normally, this pin has high impedance.
15	RIN	I	Reference divider input pin. The input section contains a bias circuit and an amplifier. Connect the reference oscillator (such as TCXO) by AC-coupling.
16	Vss	–	Ground pin.

SEMICONDUCTOR DATA

Bidirectional buffer : TC74VHC245F (COntrol Unit IC15)

■ Terminal connection diagram

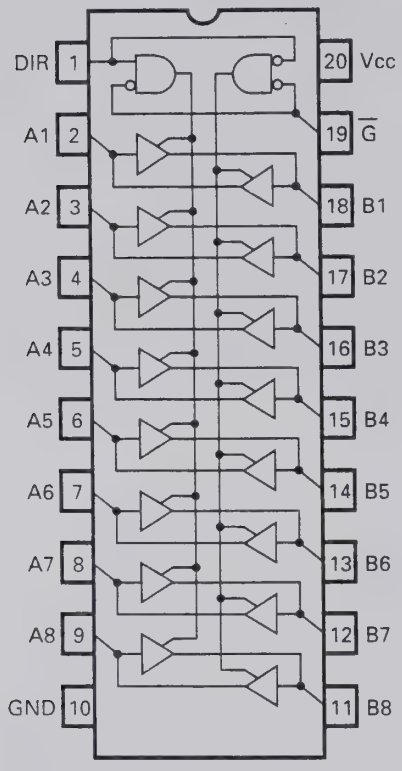

■ Logic diagram

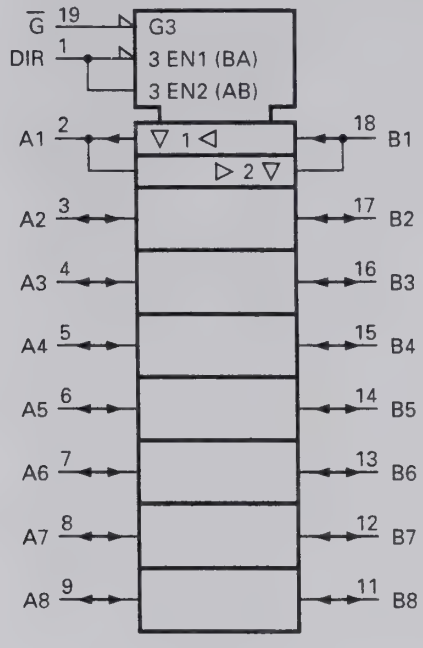

■ Truth table

Input		Function		Output
$\overline{G}$	DIR	A bus	B bus	state
L	L	Output	Input	A=B
L	H	Input	Output	B=A
H	X	High impedance		Z

X : Don't Care Z : High impedance

SEMICONDUCTOR DATA

DC/AC Converter : AK4318-VS (TX-RX Unit IC16, 27)

■ Terminal connection diagram

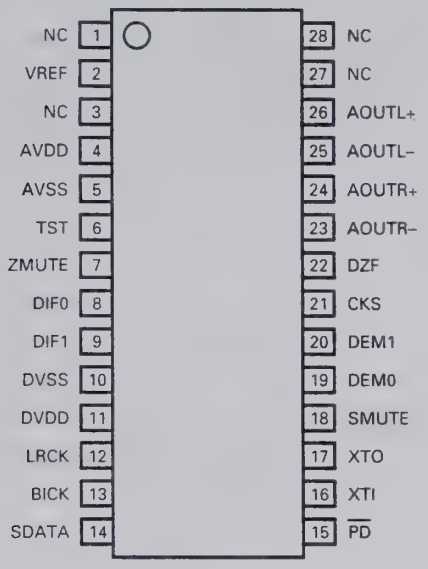

■ Block diagram

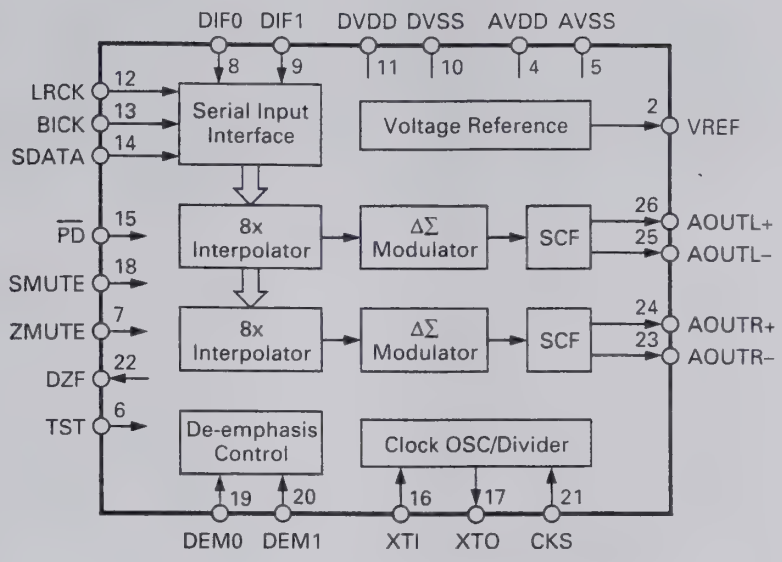

■ Terminal functions

Pin No.	Pin name	I/O	Function
1	NC	–	
2	VREF	O	Reference voltage output pin (AVDD) – 3.75V. The 10µF electrolytic capacitor and 0.1µF ceramic capacitor are connected between VREF and AVDD.
3	NC	–	
4	AVDD	–	Analog power supply pin (+5V).
5	AVSS	–	Analog ground pin.
6	TST	I	Test pin (pull down). Must be open or low.
7	ZMUTE	I	Zero mute pin (pull down). High : Detects zero and mutes output.
8, 9	DIF0, DIF1	I	Input format pin. Supports four modes.
10	DVSS	–	Digital ground pin.
11	DVDD	–	Digital power supply pin (+5V).
12	LRCK	I	L/R clock pin. Determines the input serial data channel.
13	BICK	I	Serial bit clock pin. The clock latches serial data.
14	SDATA	I	Serial data input pin. Number two's complement MSB first.
15	$\overline{PD}$	I	Reset pin. When this pin goes low, the filter and modulator are reset. Make this pin low to reset the filter and modulator when the power is turned on.
16	XTI	I	Clock input pin. Connect a crystal oscillator between XTI and XTO or input the external CMOS clock to XTI. The clock frequency can be selected with the CKS pin.
17	XTO	O	Crystal oscillator output pin. If the crystal oscillator is used, connect it between the XTO and XTI pins. If the external clock is used, open this pin.
18	SMUTE	I	Soft mute pin (pull down). High : Soft mute, Low : Cancel
19, 20	DEM0, DEM1	I	De-emphasis mode pin. Supports three frequencies.
21	CKS	I	Clock select pin. Low : CLK 256 fd, High : CLK 384 fs
22	DZF	O	Zero input detection pin. High when the data input to the SDATA pin for both channels becomes zero 8192 times consecutively.
23	AOUTR–	O	Right-channel analog negative output pin.
24	AOUTR+	O	Right-channel analog positive output pin.
25	AOUTL–	O	Left-channel analog negative output pin.
26	AOUTL+	O	Left-channel analog positive output pin.
27, 28	NC	–	

SEMICONDUCTOR DATA

AC/DC Converter : AK5340-VS (TX-RX Unit IC25)

■ Terminal connection diagram

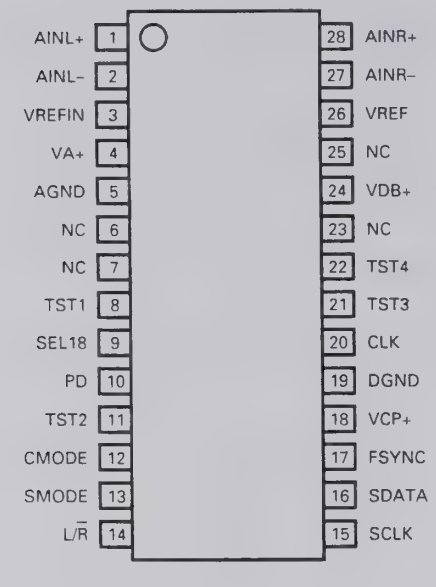

■ Block diagram

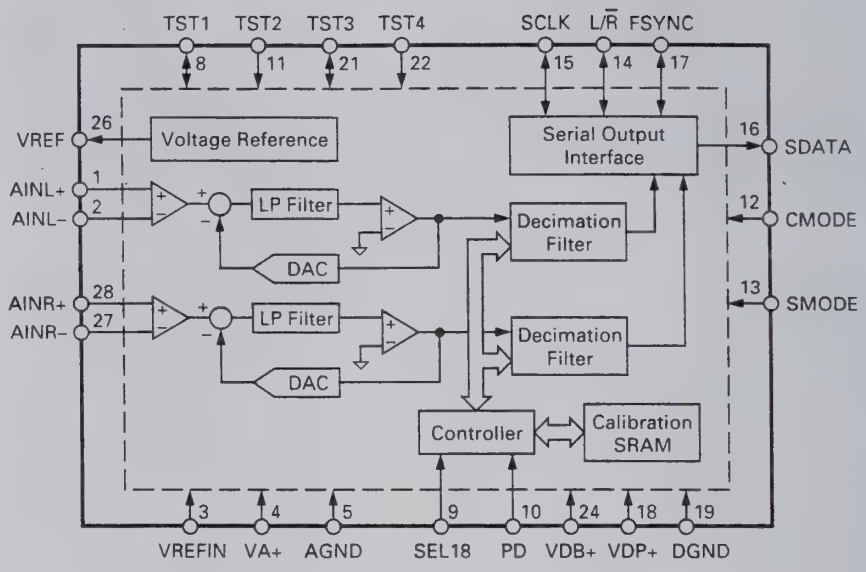

■ Terminal functions

Pin No.	Pin name	I/O	Function
1	AINL+	I	Left-channel analog non-inverted input pin.
2	AINL–	I	Left-channel analog inverted input pin.
3	VREFIN	I	Reference voltage input pin. Normally connect to the VREF pin. The input range is 1.6 times the difference between VA+ and the voltage input to this pin.
4	VA+	–	Analog section analog power supply pin (+5V).
5	AGND	–	Analog section analog ground pin.
6, 7	NC	–	
8	TST1	–	Test pin. Open or connect to DGND.
9	SEL18	I	Output data length select pin (with pull down resistor). Low : 16 bits, High : 18 bits
10	PD	I	Power down pin. High : Power down mode. Offset calibration starts at a falling edge. When the power is turned on or the clock frequency is changed, calibration must be carried out.
11	TST2	–	Test pin. Open or connect to DGND.
12	CMODE	I	Master clock select pin. Low : CLK 256 fs (12.288MHz @fs : 48kHz), High : CLK 384 fs (18.432MHz @fs : 48kHz)
13	SMODE	I	Interface clock select pin. Set the input/output of each of the L/$\overline{R}$, SCLK, and FSYNC clock pins. Low : Save mode (all input pins), High : Master mode (all output pins)
14	L/$\overline{R}$	I/O	Input channel select pin. Slave mode : The fs clock is input. Lch MSB data is output at a rising edge and Rch MSB data is output at a falling edge of the clock signal. Master mode : The fs clock is output. SDATA is output one clock after the L/$\overline{R}$ edge. High when the power is down (PD : High).
15	SCLK	I/O	Serial data clock pin. One bit of data is output at a falling edge of the clock. Slave mode : Normally a 32 to 64 fs clock is input. Master mode : A 64 fs clock is output. Low when the power is down (PD : High).
16	SDATA	O	Serial data output pin. Data is number two's complement and the MSB is output first. Goes low after 16/18 bits are output. Low when the power is down (PD : High).
17	FSYNC	I/O	Frame synchronization clock pin. Slave mode : SDATA output is enabled when the pin is high. Master mode : The 2 fs clock is output. High when 16-bit data is output. The two low-order bits are low when 18-bit output is selected. Low when the power is down (PD : High).
18	VDP+	–	Digital section power supply pin (+5V).
19	DGND	–	Digital section ground pin.
20	CLK	I	Master clock input pin. When CMODE is high, CLK : 384 fs. When CMODE is low, CLK : 256 fs.
21, 22	TST3, TST4	–	Test pin. Open or connect to DGND.

SEMICONDUCTOR DATA

Pin No.	Pin name	I/O	Function
23	NC	–	
24	VDB+	–	Digital section power supply pin (+5V). (Silicon PCB potential)
25	NC	–	
26	VREF	O	Reference voltage output pin (VA+) – 2.6V. Output based on VA+. Normally connect this output to the VREFIN pin.
27	AINR–	I	Right-channel analog inverted output pin.
28	AINR+	I	Right-channel analog non-inverted output pin.

DC/AC Converter : PCM69AU (TX-RX Unit IC34)

■ Terminal connection diagram

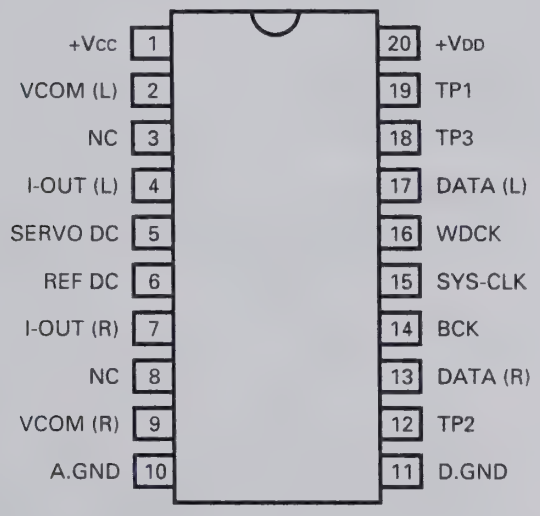

■ Terminal functions

Pin No.	Pin name	Function
1	+VCC	Analog Positive power supply
2	VCOM (L)	Lch V common
3	NC	
4	I-OUT (L)	Lch current output
5	SERVO DC	Servo filter
6	REF DC	Reference filter
7	I-OUT (R)	Rch current output
8	NC	
9	VCOM (R)	Rch V common
10	A. GND	Analog common
11	D. GND	digital common
12	TP2	Test pin 2
13	DATA (R)	Rch data input
14	BCK	Bit clock input
15	SYS-CLK	System clock input
16	WDCK	Word clock input
17	DATA (L)	Lch data input
18	TP3	Test pin 3
19	TP1	Test pin 1
20	+VDD	Digital positive power supply

PARTS LIST

CAPACITORS

CC 45 TH 1H 220 J
1 2 3 4 5 6

1 = Type ... ceramic, electrolytic, etc.
2 = Shape ... round, square, ect.
3 = Temp. coefficient
4 = Voltage rating
5 = Value
6 = Tolerance

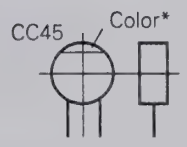

• Capacitor value

010 = 1pF
100 = 10pF
101 = 100pF
102 = 1000pF = 0.001µF
103 = 0.01µF

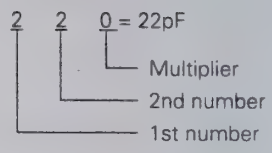

• Temperature coefficient

1st Word	C	L	P	R	S	T	U
Color*	Black	Red	Orange	Yellow	Green	Blue	Violet
ppm/°C	0	–80	–150	–220	–330	–470	–750

2nd Word	G	H	J	K	L
ppm/°C	±30	±60	±120	±250	±500

Example : CC45TH = –470 ± 60ppm/°C

• Tolerance

Code	C	D	G	J	K	M	X	Z	P	No code
(%)	±0.25	±0.5	±2	±5	±10	±20	+40 –20	+80 –20	+100 –0	More than 10µF – 10 ~ +50 Less than 4.7µF –10 ~ +75

Less than 10pF

Code	B	C	D	F	G
(pF)	±0.1	±0.25	±0.5	±1	±2

• Voltage rating

1st word \ 2nd word	A	B	C	D	E	F	G	H	J	K	V
0	1.0	1.25	1.6	2.0	2.5	3.15	4.0	5.0	6.3	8.0	–
1	10	12.5	16	20	25	31.5	40	50	63	80	35
2	100	125	160	200	250	315	400	500	630	800	–
3	1000	1250	1600	2000	2500	3150	4000	5000	6300	8000	–

• Chip capacitors (Refer to the table above except dimension)

(EX) CC 73 F SL 1H 000 J
1 2 3 4 5 6 7
(Chip) (CH, RH, UJ, SL)

(EX) CK 73 F F 1H 000 Z
1 2 3 4 5 6 7
(Chip) (B, F)

RESISTORS

• Chip resistor (Carbon)

(EX) RD 73 E B 2B 000 J
1 2 3 4 5 6 7
(Chip) (B,F)

• Carbon resistor (Normal type)

(EX) RD 14 B B 2C 000 J
1 2 3 4 5 6 7

1 = Type ... ceramic, electrolytic, etc.
2 = Shape ... round, square, ect.
3 = Dimension
4 = Temp. coefficient
5 = Voltage rating
6 = Value
7 = Tolerance

Dimension

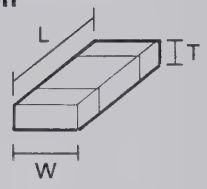

• Dimension (Chip capacitor)

Dimension code	L	W	T
Empty	5.6 ± 0.5	5.0 ± 0.5	Less than 2.0
E	3.2 ± 0.2	1.6 ± 0.2	Less than 1.25
F	2.0 ± 0.3	1.25 ± 0.2	Less than 1.25

• Dimension (Chip resistor)

Dimension code	L	W	T	Wattage
E	3.2 ± 0.2	1.6 ± 0.2	0.57	2B
F	2.0 ± 0.3	1.25 ± 0.2	0.45	2A

Rating wattage

Code	Wattage	Code	Wattage	Code	Wattage
2A	1/10W	2E	1/4W	3A	1W
2B	1/8W	2H	1/2W	3D	2W
2C	1/6W				

PARTS LIST

* New Parts. ⚠ indicates safety critical components.
Parts without **Parts No.** are not supplied.
Les articles non mentionnes dans le **Parts No.** ne sont pas fournis.
Teile ohne **Parts No.** werden nicht geliefert.

L : Scandinavia **K**: USA **P** : Canada
Y : PX (Far East, Hawaii) **T** : England **E** : Europe
Y : AAFES (Europe) **X**: Australia **M**: Other Areas

TS-870S

Ref. No.	Address	New parts	Parts No.	Description	Destination
			TS-870S		
1	1B	*	A01-2097-01	METALLIC CABINET (UPPER)	
2	3B	*	A01-2098-01	METALLIC CABINET (LOWER)	
33	3A,2D	*	A62-0382-02	PANEL ASSY	
3	2C	*	A62-0384-02	PANEL	
4	2D	*	B10-1227-03	FRONT GLASS	
5	2D	*	B11-1123-04	REFLECTOR	
6	1E	*	B38-0736-05	DISPLAY ASSY	
7	2B		B42-3343-04	S/NO LABBL	
8	3N		B42-5526-04	STICKER	K
9	2C		B43-1045-04	BADGE (KENWOOD)	
10	2C	*	B43-1101-04	BADGE (DSP)	
11	3N		B44-2163-04	UPC CORD LABEL	
12	1O		B46-0310-03	WARRNTY CARD	EE2E3E9
12	1O		B46-0410-40	WARRNTY CARD	K
12	1O		B46-0422-00	WARRNTY CARD	P
13	1O	*	B62-0542-00	INSTRUCTION MANUAL (ENGLISH)	
14	1O	*	B62-0543-00	INSTRUCTION MANUAL (SPANISH)	MM2E2E3
15	1O	*	B62-0544-00	INSTRUCTION MANUAL (NETHERLAND)	MM2E2E3
16	1O	*	B62-0545-00	INSTRUCTION MANUAL (FRENCH)	PMM2
16	1O	*	B62-0545-00	INSTRUCTION MANUAL (FRENCH)	E2E3E9
17	1O	*	B62-0546-00	INSTRUCTION MANUAL (GERMAN)	E
18	1O	*	B62-0547-00	INSTRUCTION MANUAL (ITALIAN)	E
19	2B	*	B72-0911-04	MODEL NAME PLATE	KMM2XP
19	2B	*	B72-0912-04	MODEL NAME PLATE	EE2E3E9
20	1H		E04-0167-05	RF COAXIAL CABLE RECEPTACLE (M)	
21	1N		E07-0751-05	DIN PLUG (7P) ACSY	
22	1N		E07-1351-05	DIN PLUG (13P) ACSY	
23	1H		E23-0992-04	EARTH LUG (ANT)	
24	1N	*	E30-3157-15	DC CORD ACSY	
W51	2K,3K		E31-3433-05	LEAD WIRE WITH MINIPIN PLUG	
W52	3I,4K		E37-0062-05	LEAD WIRE WITH MINIPIN PLUG	
W53	2I,4K	*	E37-0518-05	LEAD WIRE WITH MINIPIN PLUG	
W54	1I,2I	*	E37-0519-05	LEAD WIRE WITH MINIPIN PLUG	
W56	1J,2K	*	E37-0521-05	LEAD WIRE WITH MINIPIN PLUG	
W57	1I,4K	*	E37-0522-05	LEAD WIRE WITH MINIPIN PLUG	
W58	1I	*	E37-0523-05	FLAT CABLE	
W59	2I,1J	*	E37-0524-05	FLAT CABLE	
W60	2A	*	E37-0526-05	FLAT CABLE	
W61	2A	*	E37-0527-05	FLAT CABLE	
W62	3I	*	E37-0528-05	FLAT CABLE	
W63-1	4J	*	E37-0529-05	FLAT CABLE	
W63-2	3I,4I	*	E37-0529-05	FLAT CABLE	
W64	4J	*	E37-0530-05	FLAT CABLE	
W65	3I	*	E37-0531-05	FLAT CABLE	
W66	3I,4I	*	E37-0532-05	FLAT CABLE	
W67	2A	*	E37-0533-05	FLAT CABLE	
W68	2A	*	E37-0534-05	FLAT CABLE	
W69	2I,4I	*	E37-0535-05	LEAD WIRE WITH MINIPIN PLUG	
W70	2A	*	E37-0537-05	LEAD WIRE WITH CONNECTOR	
W71	1I,1J	*	E37-0538-05	LEAD WIRE WITH CONNECTOR	
W72	1I,4K	*	E37-0540-05	LEAD WIRE WITH CONNECTOR	
W73	1I,1J	*	E37-0541-15	LEAD WIRE WITH CONNECTOR	
W74	1K	*	E37-0542-05	LEAD WIRE WITH CONNECTOR	
W75	2J	*	E37-0543-05	LEAD WIRE WITH CONNECTOR	
W76	2A	*	E37-0547-15	LEAD WIRE WITH CONNECTOR (SP)	
W77	2J	*	E37-0548-05	LEAD WIRE WITH CONNECTOR	
W78	2I,4I	*	E37-0549-05	LEAD WIRE WITH CONNECTOR	
W79	2A	*	E37-0550-15	LEAD WIRE WITH CONNECTOR	
W80	2I,4J	*	E37-0551-05	LEAD WIRE WITH CONNECTOR	
W81	1I,4I	*	E37-0552-05	LEAD WIRE WITH CONNECTOR	
W82	2K,3K	*	E37-0569-05	LEAD WIRE WITH MINIPIN PLUG	
W83	–	*	E37-0570-05	LEAD WIRE WITH CONNECTOR (VS-2)	
26	1N		F05-2531-05	FUSE (25A/32V) ACSY	
27	1N		F06-4029-05	FUSE (4A/250V) ACSY	
28	2G	*	F09-0449-05	FAN MOTOR	
29	3G		F10-1206-04	SHIELDING COVER (EARTH SPRING)	
30	2B,1G		F10-1468-13	SHIELDING COVER (FINAL)	
31	1G		G02-0574-04	FLAT SPRING (AVR)	
32	2G	*	G02-0767-04	FLAT SPRING (THERMMISTOR)	
34	1A		G10-0697-04	FIBROUS SHEET (SP)	
35	1D		G10-0702-04	FIBROUS SHEET (SUB 2)	
36	1A		G10-0703-04	FIBROUS SHEET (CASE)	
39	1B		G13-0934-04	CUSHION (UPPER CASE)	
40	2G		G13-1310-04	CUSHION (FAN)	
41	4F	*	G13-1327-04	CUSHION (DRU-3)	
42	2D	*	G13-1480-04	CUSHION (KNOB)	
43	2D	*	G13-1481-04	CUSHION (KNOB)	
44	2D	*	G13-1482-04	CUSHION (KNOB)	
45	2D	*	G13-1483-04	CUSHION (KNOB)	
46	1A	*	G13-1498-04	CUSHION (SP)	
47	3B	*	G13-1511-04	CUSHION (LOWER CASE)	
50	2N	*	H10-2791-01	POLYSTYRENE FOAMED FIXTURE (F)	
51	2O	*	H10-2792-11	POLYSTYRENE FOAMED FIXTURE (R)	
52	1N	*	H13-0963-04	CARTON BOARD	
53	2O		H20-1437-03	PROTECTION COVER	
54	1N		H25-0029-04	BAG (FUSE)	
55	1N		H25-0079-04	BAG (MIC)	
56	1N		H25-0708-04	BAG (DC CORD)	
57	2O	*	H52-0730-02	ITEM CARTON CASE	
58	3O	*	H62-0641-03	OUTER PACKING CASE	
59	3B		J02-0049-14	FOOT (REAR)	
60	1A,3A		J02-0441-05	FOOT (SIDE)	
61	3A	*	J02-0474-05	FOOT (FRONT)	
62	2G		J21-4326-03	HARDWARE FIXTURE (FAN)	
63	1D	*	J21-4496-05	HARDWARE FIXTURE (PHONE JACK)	
64	2D		J31-0141-04	COLLAR (MIC)	
65	2H	*	J32-0923-04	HEXAGON BOSS	
–			J61-0307-05	BAND	
70	1B		K01-0416-05	HANDLE ASSY	
71	2C	*	K21-1102-04	KNOB (MAIN : WITH SCREW)	
72	2C	*	K29-4966-04	KNOB RING (MAIN)	
73	2D	*	K29-4967-03	KNOB (FILTER)	
74	2C	*	K29-4968-03	KNOB (M.CH,RIT : WITH SPRING)	
75	2C	*	K29-4969-03	KNOB (INSIDE)	
76	2C	*	K29-4970-03	KNOB (OUTSIDE)	
77	1C	*	K29-4978-03	KNOB (POWER)	
78	1D	*	K29-4979-03	KNOB (UP/DOWN)	

PARTS LSIT

TS-870S
RF UNIT (X44-3210-00)

Ref. No.	Address	New parts	Parts No.	Description	Destination
79	1C	*	K29-4980-03	KNOB (ANT, etc.)	
80	1D	*	K29-4981-03	KNOB (LED)	
81	1C,1D	*	K29-4982-03	KNOB (AT TUNE, etc.)	
82	1D	*	K29-4983-03	KNOB (LED)	
83	1C	*	K29-4984-03	KNOB (QUICK MEMO)	
84	1C	*	K29-4985-03	KNOB (LSB/USB)	
85	1C	*	K29-4986-03	KNOB (CW/-R)	
86	1C	*	K29-4987-03	KNOB (FSK/-R)	
87	1C	*	K29-4988-03	KNOB (FM/AM)	
88	1D	*	K29-4989-03	KNOB (AUTO NOTCH)	
89	1D	*	K29-4990-03	KNOB (BEAT CANCEL)	
90	1D	*	K29-4991-03	KNOB (N.R)	
91	1D	*	K29-4992-03	KNOB (TX EQ.)	
A	1H		N09-0372-04	SCREW (DC)	
B	1H		N09-0682-04	SCREW (GND)	
C	3F		N09-2051-05	SCREW	X
D	1H		N11-0040-46	FLANGE NUT (GND)	
E	1H		N14-0509-05	NUT (GND)	
F	1H		N15-1040-46	FLAT WASHER (GND)	
G	1D,1E		N32-2606-46	FLAT HEAD SCREW	
H	2A,3A		N32-3006-46	FLAT HEAD SCREW (SUB PANEL)	
I	1B,3B		N33-3006-41	OVAL HEAD SCREW (CASE)	
J	2A,2F		N87-2606-46	BRAZIER HEAD SCREW (UNIT,RL)	
K	1A,1H		N87-3006-46	BRAZIER HEAD SCREW (AT,FAN)	
L	2G,2H		N87-3008-46	BRAZIER HEAD SCREW	
M	2B,1G		N88-2608-46	FLAT HEAD SCREW (FINAL)	
N	2D		N90-3008-46	TP HEAD MACHIN SCREW (PANEL)	
P	3A,3B		N91-3010-46	TP HEAD TAPPING SCREW (FOOT)	
SP	1A		T07-0252-15	LOUDSPEAKER (8 ohm 1W)	
MIC	1N		T91-0352-15	MICROPHONE ACSY	
93	1E		W02-1836-05	ENCODER	
BATT	2A	*	W09-0873-05	LITHIUM CELL (3V 220MAh)	

RF UNIT (X44-3210-00)

C1			CK73FB1H103K	CHIP C	0.010UF	K
C2			CC73FCH1H121J	CHIP C	120PF	J
C3			CK73FF1C105Z	CHIP C	1.0UF	Z
C4,5			CK73FB1H103K	CHIP C	0.010UF	K
C6			CK73FB1E103K	CHIP C	0.010UF	K
C7			CK73FB1H103K	CHIP C	0.010UF	K
C8			CK73FB1H102K	CHIP C	1000PF	K
C10			CK73FB1H103K	CHIP C	0.010UF	K
C14			CK73FB1E103K	CHIP C	0.010UF	K
C15			CK73FF1C105Z	CHIP C	1.0UF	Z
C16			CK73FF1E104Z	CHIP C	0.10UF	Z
C17			CK73FF1C105Z	CHIP C	1.0UF	Z
C18			CK73FB1E103K	CHIP C	0.010UF	K
C19			CK73FB1H182K	CHIP C	1800PF	K
C21			CK73FB1H682K	CHIP C	6800PF	K
C22			CK73FB1H182K	CHIP C	1800PF	K
C23			CK73FF1E104Z	CHIP C	0.10UF	Z
C27			CK73FF1E104Z	CHIP C	0.10UF	Z
C28			CE04EW1C100M	ELECTRO	10UF	16WV
C29-31			CK73FF1E104Z	CHIP C	0.10UF	Z
C32			CE04EW1C100M	ELECTRO	10UF	16WV
C33			CK73FF1C105Z	CHIP C	1.0UF	Z
C34			CK73FF1E104Z	CHIP C	0.10UF	Z
C35			CC73FCH1H050C	CHIP C	5.0PF	C
C36			CK73FB1H103K	CHIP C	0.010UF	K
C39,40			CK73FB1E103K	CHIP C	0.010UF	K
C47			CK73FB1H103K	CHIP C	0.010UF	K
C48			CK73FB1H223K	CHIP C	0.022UF	K
C49			CK73FB1H103K	CHIP C	0.010UF	K
C50			CK73FF1E104Z	CHIP C	0.10UF	Z
C51			CK73FF1C105Z	CHIP C	1.0UF	Z
C52			CK73FB1H222K	CHIP C	2200PF	K
C53			CK73FB1H682K	CHIP C	6800PF	K
C54			CK73FB1H222K	CHIP C	2200PF	K
C55			CK73FF1E104Z	CHIP C	0.10UF	Z
C56			CK73FF1C105Z	CHIP C	1.0UF	Z
C57			CK73FB1H472K	CHIP C	4700PF	K
C58			CK73FF1E104Z	CHIP C	0.10UF	Z
C59			CK73FF1C105Z	CHIP C	1.0UF	Z
C60			CC73FSL1H821J	CHIP C	820PF	J
C61			CK73FF1C105Z	CHIP C	1.0UF	Z
C62			CK73FB1H472K	CHIP C	4700PF	K
C63			CK73FF1E104Z	CHIP C	0.10UF	Z
C64			CK73FB1H222K	CHIP C	2200PF	K
C65			CK73FF1E104Z	CHIP C	0.10UF	Z
C66			CK73FF1C105Z	CHIP C	1.0UF	Z
C67			CK73FB1H561K	CHIP C	560PF	K
C68			CK73FF1C105Z	CHIP C	1.0UF	Z
C69			CK73FB1H222K	CHIP C	2200PF	K
C70			CK73FF1E104Z	CHIP C	0.10UF	Z
C71			CK73FB1H102K	CHIP C	1000PF	K
C72			CK73FF1E104Z	CHIP C	0.10UF	Z
C73			CK73FF1C105Z	CHIP C	1.0UF	Z
C74			CC73FSL1H271J	CHIP C	270PF	J
C75			CK73FF1C105Z	CHIP C	1.0UF	Z
C76			CK73FB1H102K	CHIP C	1000PF	K
C77,78			CK73FF1E104Z	CHIP C	0.10UF	Z
C80			CK73FF1C105Z	CHIP C	1.0UF	Z
C81			CC73FCH1H050C	CHIP C	5.0PF	C
C83			CC73FCH1H050C	CHIP C	5.0PF	C
C85			CC73FCH1H050C	CHIP C	5.0PF	C
C87			CK73FF1C105Z	CHIP C	1.0UF	Z
C88			CK73FF1E104Z	CHIP C	0.10UF	Z
C89			CK73FB1H102K	CHIP C	1000PF	K
C90			CK73FF1E104Z	CHIP C	0.10UF	Z
C91			CK73FF1C105Z	CHIP C	1.0UF	Z
C92			CC73FCH1H121J	CHIP C	120PF	J
C93			CK73FF1C105Z	CHIP C	1.0UF	Z
C94			CK73FB1H102K	CHIP C	1000PF	K
C95			CK73FF1E104Z	CHIP C	0.10UF	Z
C96			CK73FB1H102K	CHIP C	1000PF	K
C97			CK73FF1E104Z	CHIP C	0.10UF	Z
C98			CK73FF1C105Z	CHIP C	1.0UF	Z
C99			CC73FCH1H820J	CHIP C	82PF	J
C100			CK73FF1C105Z	CHIP C	1.0UF	Z
C101			CK73FB1H102K	CHIP C	1000PF	K
C102,103			CK73FF1E104Z	CHIP C	0.10UF	Z
C105			CK73FF1C105Z	CHIP C	1.0UF	Z
C106			CC73FCH1H040C	CHIP C	4.0PF	C
C108			CC73FCH1H040C	CHIP C	4.0PF	C
C110			CK73FF1C105Z	CHIP C	1.0UF	Z

PARTS LIST

RF UNIT (X44-3210-00)

Ref. No.	Address	New parts	Parts No.	Description			Destination
C111			CK73FF1E104Z	CHIP C	0.10UF	Z	
C112			CC73FSL1H391J	CHIP C	390PF	J	
C113			CK73FF1E104Z	CHIP C	0.10UF	Z	
C114			CK73FF1C105Z	CHIP C	1.0UF	Z	
C115			CC73FCH1H680J	CHIP C	68PF	J	
C116			CK73FF1C105Z	CHIP C	1.0UF	Z	
C117			CC73FSL1H151J	CHIP C	150PF	J	
C118,119			CK73FF1E104Z	CHIP C	0.10UF	Z	
C121			CK73FF1C105Z	CHIP C	1.0UF	Z	
C122			CC73FCH1H050C	CHIP C	5.0PF	C	
C124			CC73FCH1H050C	CHIP C	5.0PF	C	
C126			CK73FF1C105Z	CHIP C	1.0UF	Z	
C127			CK73FF1E104Z	CHIP C	0.10UF	Z	
C128			CC73FCH1H221J	CHIP C	220PF	J	
C129			CK73FF1E104Z	CHIP C	0.10UF	Z	
C130			CK73FF1C105Z	CHIP C	1.0UF	Z	
C131			CC73FCH1H330J	CHIP C	33PF	J	
C132			CK73FF1C105Z	CHIP C	1.0UF	Z	
C133			CK73FF1E104Z	CHIP C	0.10UF	Z	
C134			CK73FB1H103K	CHIP C	0.010UF	K	
C135			CC73FCH1H121J	CHIP C	120PF	J	
C136			CK73FF1E104Z	CHIP C	0.10UF	Z	
C137			CC73FSL1H221J	CHIP C	220PF	J	
C138			CK73FB1E103K	CHIP C	0.010UF	K	
C139			CK73FF1E104Z	CHIP C	0.10UF	Z	
C140,141			CK73FB1E103K	CHIP C	0.010UF	K	
C142			CK73FF1E104Z	CHIP C	0.10UF	Z	
C143			CC73FCH1H390J	CHIP C	39PF	J	
C144,145			CK73FB1E103K	CHIP C	0.010UF	K	
C146,147			CK73FF1E104Z	CHIP C	0.10UF	Z	
C148			CK73FB1E103K	CHIP C	0.010UF	K	
C149			CK73FF1E104Z	CHIP C	0.10UF	Z	
C150,151			CK73FF1C105Z	CHIP C	1.0UF	Z	
C152,153			CK73FF1E104Z	CHIP C	0.10UF	Z	
C154			CC73FCH1H101J	CHIP C	100PF	J	
C155			CC73FCH1H150J	CHIP C	15PF	J	
C156			CK73FB1E103K	CHIP C	0.010UF	K	
C157			CC73FSL1H221J	CHIP C	220PF	J	
C158			CK73FB1H471K	CHIP C	470PF	K	
C159			CK73FB1H102K	CHIP C	1000PF	K	
C160			CC73FCH1H470J	CHIP C	47PF	J	
C161			CC73FCH1H820J	CHIP C	82PF	J	
C162			CK73FF1E104Z	CHIP C	0.10UF	Z	
C163			CK73FB1E103K	CHIP C	0.010UF	K	
C164			CC73FSL1H471J	CHIP C	470PF	J	
C165			CK73FB1E103K	CHIP C	0.010UF	K	
C166,167			CK73FF1E104Z	CHIP C	0.10UF	Z	
C168			CK73FB1E103K	CHIP C	0.010UF	K	
C169			CC73FCH1H680J	CHIP C	68PF	J	
C170			CK73FF1E104Z	CHIP C	0.10UF	Z	
C171			CC73FCH1H470J	CHIP C	47PF	J	
C172,173			CK73FB1E103K	CHIP C	0.010UF	K	
C174			CC73FSL1H471J	CHIP C	470PF	J	
C175			CC73FCH1H470J	CHIP C	47PF	J	
C176			CE04EW1C470M	ELECTRO	47UF	16WV	
C177			CC73FCH1H050C	CHIP C	5.0PF	C	
C178			CC73FCH1H680J	CHIP C	68PF	J	
C179			CK73FF1E104Z	CHIP C	0.10UF	Z	
C180			CC73FCH1H020C	CHIP C	2.0PF	C	

Ref. No.	Address	New parts	Parts No.	Description			Destination
C181			CC73FCH1H050C	CHIP C	5.0PF	C	
C182			CK73FB1E103K	CHIP C	0.010UF	K	
C184			CC73FCH1H050C	CHIP C	5.0PF	C	
C185			CC73FCH1H220J	CHIP C	22PF	J	
C186			CC73FCH1H050C	CHIP C	5.0PF	C	
C187			CC73FCH1H1R5C	CHIP C	1.5PF	C	
C188			CC73FCH1H220J	CHIP C	22PF	J	
C189			CC73FCH1H0R5C	CHIP C	0.5PF	C	
C190			CK73FB1E103K	CHIP C	0.010UF	K	
C191			CC73FSL1H681J	CHIP C	680PF	J	
C192,193			CK73FB1H102K	CHIP C	1000PF	K	
C194			CC73FSL1H331J	CHIP C	330PF	J	
C195			CC73FSL1H471J	CHIP C	470PF	J	
C196			CK73FB1H102K	CHIP C	1000PF	K	
C197			CK73FB1E103K	CHIP C	0.010UF	K	
C198			CC73FCH1H020C	CHIP C	2.0PF	C	
C199			CK73FB1E103K	CHIP C	0.010UF	K	
C201-206			CK73FB1E103K	CHIP C	0.010UF	K	
C207			CC73FCH1H470J	CHIP C	47PF	J	
C208			CK73FF1E104Z	CHIP C	0.10UF	Z	
C209			CK73FB1H102K	CHIP C	1000PF	K	
C211,212			CK73FF1E104Z	CHIP C	0.10UF	Z	
C214			CK73FB1E103K	CHIP C	0.010UF	K	
C215			CK73FF1E104Z	CHIP C	0.10UF	Z	
C216			CE04EW1C100M	ELECTRO	10UF	16WV	
C217			CK73FF1E104Z	CHIP C	0.10UF	Z	
C218			CC73FCH1H470J	CHIP C	47PF	J	
C219			CK73FF1E104Z	CHIP C	0.10UF	Z	
C220			CE04EW1H010M	ELECTRO	1.0UF	50WV	
C221-223			CK73FF1E104Z	CHIP C	0.10UF	Z	
C224			CK73FB1E103K	CHIP C	0.010UF	K	
C225			CK73FB1H102K	CHIP C	1000PF	K	
C226-228			CK73FB1E103K	CHIP C	0.010UF	K	
C229			CC73FCH1H050C	CHIP C	5.0PF	C	
C230			CK73FB1E103K	CHIP C	0.010UF	K	
C231			CC73FCH1H220J	CHIP C	22PF	J	
C232			CK73FF1E104Z	CHIP C	0.10UF	Z	
C233			CK73FB1H102K	CHIP C	1000PF	K	
C234			CK73FF1E104Z	CHIP C	0.10UF	Z	
C236			CK73FB1E103K	CHIP C	0.010UF	K	
C237			CC73FCH1H220J	CHIP C	22PF	J	
C238			CK73FB1E103K	CHIP C	0.010UF	K	
C239			CK73FB1H471K	CHIP C	470PF	K	
C240,241			CK73FB1E103K	CHIP C	0.010UF	K	
C242			CC73FSL1H471J	CHIP C	470PF	J	
C243,244			CK73FB1E103K	CHIP C	0.010UF	K	
C245			CC73FSL1H471J	CHIP C	470PF	J	
C246			CC73FCH1H010C	CHIP C	1.0PF	C	
C247			CC73FSL1H471J	CHIP C	470PF	J	
C248			CK73FB1E103K	CHIP C	0.010UF	K	
C249			CC73FCH1H0R5C	CHIP C	0.5PF	C	
C250			CC73FCH1H010C	CHIP C	1.0PF	C	
C251-253			CK73FB1E103K	CHIP C	0.010UF	K	
C254			CK73FF1E104Z	CHIP C	0.10UF	Z	
C256,257			CK73FB1E103K	CHIP C	0.010UF	K	
C260			CK73FB1E103K	CHIP C	0.010UF	K	
C262,263			CK73FB1E103K	CHIP C	0.010UF	K	
C265-273			CK73FB1E103K	CHIP C	0.010UF	K	
C274			CC73FCH1H180J	CHIP C	18PF	J	

PARTS LSIT

RF UNIT (X44-3210-00)

Ref. No.	Address	New parts	Parts No.	Description			Destination
C275			CC73FCH1H150J	CHIP C	15PF	J	
C276			CC73FCH1H180J	CHIP C	18PF	J	
C277-279			CK73FB1E103K	CHIP C	0.010UF	K	
C280			CC73FCH1H101J	CHIP C	100PF	J	
C281,282			CC73FCH1H220J	CHIP C	22PF	J	
C283			CC73FCH1H330J	CHIP C	33PF	J	
C285			CK73FB1E223K	CHIP C	0.022UF	K	
C286			CE04EW1H010M	ELECTRO	1.0UF	50WV	
C287			CE04EW1C100M	ELECTRO	10UF	16WV	
C288			CK73FB1H473K	CHIP C	0.047UF	K	
C289			CE04EW1C100M	ELECTRO	10UF	16WV	
C290			CK73FB1E103K	CHIP C	0.010UF	K	
C291			CE04EW1HR47M	ELECTRO	0.47UF	50WV	
C292			CK73FB1E103K	CHIP C	0.010UF	K	
C293			CC73FCH1H101J	CHIP C	100PF	J	
C294			CK73FF1E104Z	CHIP C	0.10UF	Z	
C295-298			CK73FB1E103K	CHIP C	0.010UF	K	
C299,300			CK73FB1H103K	CHIP C	0.010UF	K	
C301			CK73FB1H102K	CHIP C	1000PF	K	
C302			CK73FB1H103K	CHIP C	0.010UF	K	
C303			CK73FB1H102K	CHIP C	1000PF	K	
C304			CK45FE2H222P	CERAMIC	2200PF	P	
C305			CK73FB1H103K	CHIP C	0.010UF	K	
C306,307			CK73FB1H102K	CHIP C	1000PF	K	
C308			CK73FB1H103K	CHIP C	0.010UF	K	
C310			CK73FB1H103K	CHIP C	0.010UF	K	
C312			CE04EW1C100M	ELECTRO	10UF	16WV	
C313,314			CK73FB1H103K	CHIP C	0.010UF	K	
C315			CE04EW1C100M	ELECTRO	10UF	16WV	
C316-327			CK73FB1H102K	CHIP C	1000PF	K	
C328-331			CK73FB1E103K	CHIP C	0.010UF	K	
C332			CK73FB1H102K	CHIP C	1000PF	K	
C333			CK73FB1E103K	CHIP C	0.010UF	K	
C334			CC73FCH1H330J	CHIP C	33PF	J	
C335			CK73FB1E103K	CHIP C	0.010UF	K	
C338			CC73FSL1H221J	CHIP C	220PF	J	
C339,340			CC73FCH1H220J	CHIP C	22PF	J	
C341-346			CK73FB1E103K	CHIP C	0.010UF	K	
C347,348			CC73FCH1H100D	CHIP C	10PF	D	
C350			C92-0004-05	CHIP-TAN	1.0UF	16WV	
C500			CK73FB1E103K	CHIP C	0.010UF	K	
C501			CE04NW1C100M	ELECTRO	10UF	16WV	
C502			CK73FB1E103K	CHIP C	0.010UF	K	
C503			CE04NW1C100M	ELECTRO	10UF	16WV	
C504			CK73FB1E103K	CHIP C	0.010UF	K	
C505			CE04EW1C100M	ELECTRO	10UF	16WV	
C506			CK73FB1E103K	CHIP C	0.010UF	K	
C507			CE04NW1C100M	ELECTRO	10UF	16WV	
C508			CK73FB1E103K	CHIP C	0.010UF	K	
C509			CE04NW1C100M	ELECTRO	10UF	16WV	
C510			CK73FB1E103K	CHIP C	0.010UF	K	
C511			CE04EW1C100M	ELECTRO	10UF	16WV	
C512,513			CK73FB1E103K	CHIP C	0.010UF	K	
C514			C92-0516-05	CHIP-TAN	4.7UF	16WV	
C515			CC73FSL1H271J	CHIP C	270PF	J	
C516			CC73FSL1H561J	CHIP C	560PF	J	
C517			CK73FB1E103K	CHIP C	0.010UF	K	
C518			CC73FSL1H271J	CHIP C	270PF	J	
C519,520			CK73FB1E103K	CHIP C	0.010UF	K	

Ref. No.	Address	New parts	Parts No.	Description			Destination
C521			CE04EW1C100M	ELECTRO	10UF	16WV	
C522			CK73FB1E103K	CHIP C	0.010UF	K	
C523			CC73FCH1H121J	CHIP C	120PF	J	
C524			CC73FSL1H181J	CHIP C	180PF	J	
C525			CC73FCH1H121J	CHIP C	120PF	J	
C526-530			CK73FB1E103K	CHIP C	0.010UF	K	
C531			CC73FCH1H560J	CHIP C	56PF	J	
C532			CC73FSL1H391J	CHIP C	390PF	J	
C533			CC73FCH1H390J	CHIP C	39PF	J	
C534			CC73FCH1H680J	CHIP C	68PF	J	
C535			CC73FCH1H390J	CHIP C	39PF	J	
C536			CC73FCH1H101J	CHIP C	100PF	J	
C537			CC73FCH1H680J	CHIP C	68PF	J	
C538			CC73FCH1H390J	CHIP C	39PF	J	
C539			CC73FCH1H070D	CHIP C	7.0PF	D	
C540			CC73FCH1H680J	CHIP C	68PF	J	
C541			CC73FCH1H220J	CHIP C	22PF	J	
C542			CC73FCH1H330J	CHIP C	33PF	J	
C543-545			CK73FB1E103K	CHIP C	0.010UF	K	
C546			CC73FCH1H121J	CHIP C	120PF	J	
C547			CE04EW1C470M	ELECTRO	47UF	16WV	
C548-555			CK73FB1E103K	CHIP C	0.010UF	K	
C556			CK73FB1H102K	CHIP C	1000PF	K	
C557			CC73FCH1H330J	CHIP C	33PF	J	
C558			CC73FCH1H0R5C	CHIP C	0.5PF	C	
C560			CC73FCH1H0R5C	CHIP C	0.5PF	C	
C561			CC73FCH1H330J	CHIP C	33PF	J	
C562-564			CK73FB1E103K	CHIP C	0.010UF	K	
C565			C92-0516-05	CHIP-TAN	4.7UF	16WV	
C566,567			CC73FCH1H470J	CHIP C	47PF	J	
C568			CC73FCH1H101J	CHIP C	100PF	J	
C569			CE04EW1C100M	ELECTRO	10UF	16WV	
C570,571			CK73FB1E103K	CHIP C	0.010UF	K	
C572			CC73FCH1H100D	CHIP C	10PF	D	
C573			CC73FCH1H050C	CHIP C	5.0PF	C	
C574-576			CK73FB1E103K	CHIP C	0.010UF	K	
C577			CK73FB1H331K	CHIP C	330PF	K	
C578			CC73FCH1H620J	CHIP C	62PF	J	
C579			CK73FB1H331K	CHIP C	330PF	K	
C581			CC73FCH1H820J	CHIP C	82PF	J	
C583			CK73FB1H103K	CHIP C	0.010UF	K	
C584			CE04EW1C100M	ELECTRO	10UF	16WV	
C585			CK73FB1H103K	CHIP C	0.010UF	K	
C586			CK73FB1H682K	CHIP C	6800PF	K	
C587			CK73FB1H123K	CHIP C	0.012UF	K	
C588			CK73FB1H682K	CHIP C	6800PF	K	
C591			CK73FB1H103K	CHIP C	0.010UF	K	
C593			CK73FB1H102K	CHIP C	1000PF	K	
C594			CC73FSL1H221J	CHIP C	220PF	J	
C595			CK73FB1H103K	CHIP C	0.010UF	K	
C596			CC73FCH1H0R5C	CHIP C	0.5PF	C	
C597			CC73FCH1H270J	CHIP C	27PF	J	
C598-602			CK73FB1H103K	CHIP C	0.010UF	K	
C603			CK73FB1H102K	CHIP C	1000PF	K	
C604			CK73FB1H103K	CHIP C	0.010UF	K	
C606			CC73FCH1H270J	CHIP C	27PF	J	
C618			CE04EW1C101M	ELECTRO	100UF	16WV	
C619			C92-0001-05	CHIP-TAN	0.10UF	35WV	
C620-623			CK73FB1H102K	CHIP C	1000PF	K	

PARTS LIST

RF UNIT (X44-3210-00)

Ref. No.	Address	New parts	Parts No.	Description			Destination
C624			CK73FB1E103K	CHIP C	0.010UF	K	
C625-628			CK73FB1H102K	CHIP C	1000PF	K	
C629			CE04EW1C101M	ELECTRO	100UF	16WV	
C630,631			CK73FB1E103K	CHIP C	0.010UF	K	
C630,631			CK73FB1E103K	CHIP C	0.010UF	K	
C632			CE04EW1C101M	ELECTRO	100UF	16WV	
C633			CC73FCH1H101J	CHIP C	100PF	J	
C634			CC73FCH1H180J	CHIP C	18PF	J	
C635			CK73FB1H102K	CHIP C	1000PF	K	
C636			CC73FCH1H330J	CHIP C	33PF	J	
C637			CC73FCH1H080D	CHIP C	8.0PF	D	
C638			CC73FCH1H120J	CHIP C	12PF	J	
C639			CC73FCH1H560J	CHIP C	56PF	J	
C640			CK73FB1H183K	CHIP C	0.018UF	K	
C641			CC73FCH1H120J	CHIP C	12PF	J	
C642			CK73FB1H102K	CHIP C	1000PF	K	
C643			CC73FCH1H330J	CHIP C	33PF	J	
C644			CC73FCH1H120J	CHIP C	12PF	J	
C645			CC73FCH1H150J	CHIP C	15PF	J	
C646			CC73FCH1H390J	CHIP C	39PF	J	
C647			CC73FCH1H100D	CHIP C	10PF	D	
C648			CK73FB1H102K	CHIP C	1000PF	K	
C649			CC73FCH1H160J	CHIP C	16PF	J	
C650			CC73FCH1H240J	CHIP C	24PF	J	
C651			CC73FCH1H150J	CHIP C	15PF	J	
C652			CC73FCH1H390J	CHIP C	39PF	J	
C653			CK73FB1H183K	CHIP C	0.018UF	K	
C654			CC73FCH1H040C	CHIP C	4.0PF	C	
C655			CK73FB1H102K	CHIP C	1000PF	K	
C656			CC73FCH1H150J	CHIP C	15PF	J	
C657			CC73FCH1H200J	CHIP C	20PF	J	
C658			CC73FCH1H160J	CHIP C	16PF	J	
C659,660			CK73FB1H102K	CHIP C	1000PF	K	
C661			CC73FCH1H100D	CHIP C	10PF	D	
C662			CC73FCH1H030C	CHIP C	3.0PF	C	
C663			CC73FCH1H020C	CHIP C	2.0PF	C	
C664			CC73FCH1H040C	CHIP C	4.0PF	C	
C665,666			CK73FB1H102K	CHIP C	1000PF	K	
C667			CK73FB1E103K	CHIP C	0.010UF	K	
C668			CK73FB1H102K	CHIP C	1000PF	K	
C669			CK73FB1E103K	CHIP C	0.010UF	K	
C670			CK73FB1H102K	CHIP C	1000PF	K	
C671			CC73FCH1H240J	CHIP C	24PF	J	
C672			CK73FB1H102K	CHIP C	1000PF	K	
C673			CC73FCH1H010C	CHIP C	1.0PF	C	
C674			CC73FCH1H240J	CHIP C	24PF	J	
C675			CK73FB1E103K	CHIP C	0.010UF	K	
C676			C92-0004-05	CHIP-TAN	1.0UF	16WV	
C677			CE04EW1C221M	ELECTRO	220UF	16WV	
C678			CK73FB1E103K	CHIP C	0.010UF	K	
C679			CQ92M1H822K	MYLAR	8200PF	K	
C680			C91-1083-05	FILM	0.47UF	63WV	
C681			CK73FB1H102K	CHIP C	1000PF	K	
C682,683			CK73FB1E103K	CHIP C	0.010UF	K	
C684			CK73FB1H103K	CHIP C	0.010UF	K	
C685,686			CK73FB1E103K	CHIP C	0.010UF	K	
C687			CC73FCH1H020C	CHIP C	2.0PF	C	
C688			CC73FCH1H1R5C	CHIP C	1.5PF	C	
C689			CC73FCH1H030C	CHIP C	3.0PF	C	

Ref. No.	Address	New parts	Parts No.	Description			Destination
C690			CC73FCH1H470J	CHIP C	47PF	J	
C691			CC73FCH1H270J	CHIP C	27PF	J	
C692-696			CK73FB1E103K	CHIP C	0.010UF	K	
C697			CE04EW1C100M	ELECTRO	10UF	16WV	
C698			CK73FB1H102K	CHIP C	1000PF	K	
C699			CK73FB1E103K	CHIP C	0.010UF	K	
C700			CK73FB1H102K	CHIP C	1000PF	K	
C701			CC73FCH1H330J	CHIP C	33PF	J	
C702			CC73FCH1H100D	CHIP C	10PF	D	
C703			CC73FCH1H680J	CHIP C	68PF	J	
C704,705			CK73FB1H103K	CHIP C	0.010UF	K	
C706			CE04EW1C470M	ELECTRO	47UF	16WV	
C707			CK73FB1H103K	CHIP C	0.010UF	K	
C708			CE04EW1C101M	ELECTRO	100UF	16WV	
C710			CK73FB1H102K	CHIP C	1000PF	K	
C711			CQ92M1H333K	MYLAR	0.033UF	K	
C712			C91-1083-05	FILM	0.47UF	63WV	
C713			CK73FB1H103K	CHIP C	0.010UF	K	
C714			C92-0516-05	CHIP-TAN	4.7UF	16WV	
C715,716			CK73FB1H102K	CHIP C	1000PF	K	
C717			CE04EW1C101M	ELECTRO	100UF	16WV	
C719			CC73FCH1H020C	CHIP C	2.0PF	C	
C721-726			CC73FCH1H270J	CHIP C	27PF	J	
C727,728			CC73FCH1H100D	CHIP C	10PF	D	
C729			CC73FCH1H020C	CHIP C	2.0PF	C	
C730-732			CK73FB1H102K	CHIP C	1000PF	K	
C744			CK73FB1H102K	CHIP C	1000PF	K	
C750-757			CC73FCH1H101J	CHIP C	100PF	J	
C758-761			CK73FB1H102K	CHIP C	1000PF	K	
C762			CC73FCH1H101J	CHIP C	100PF	J	
C770			CE04EW1C470M	ELECTRO	47UF	16WV	
C771			CK73FB1H103K	CHIP C	0.010UF	K	
C780			CE04EW1E470M	ELECTRO	47UF	25WV	
C781,782			CK73FF1E104Z	CHIP C	0.10UF	Z	
C783			CE04EW1C470M	ELECTRO	47UF	16WV	
C784			CE04EW1E470M	ELECTRO	47UF	25WV	
C785,786			CK73FF1E104Z	CHIP C	0.10UF	Z	
C787			CE04EW1C470M	ELECTRO	47UF	16WV	
C800			CC73FCH1H390J	CHIP C	39PF	J	
C801			CC73FCH1H151J	CHIP C	150PF	J	
C802			CC73FCH1H390J	CHIP C	39PF	J	
C803			CC73FCH1H050C	CHIP C	5.0PF	C	
C804			CK73FB1H103K	CHIP C	0.010UF	K	
C805			CC73FCH1H020C	CHIP C	2.0PF	C	
C806,807			CK73FB1H103K	CHIP C	0.010UF	K	
C808			C92-0004-05	CHIP-TAN	1.0UF	16WV	
C907-912			CK73FB1H102K	CHIP C	1000PF	K	
C914-926			CK73FB1H102K	CHIP C	1000PF	K	
TC506,507			C05-0377-05	TRIMMER CAPACITOR		10PF	
TC508,509			C05-0376-05	TRIMMER CAPACITOR		6PF	
TC800			C05-0344-05	TRIMMER CAPACITOR		30PF	
CN2			E04-0154-05	RF COAXIAL CABLE SOCKET			
CN4			E04-0154-05	RF COAXIAL CABLE SOCKET			
CN5,6			E04-0191-05	RF COAXIAL CABLE SOCKET			
CN7			E40-3238-05	PIN CONNECTOR (3P)			
CN10			E04-0154-05	RF COAXIAL CABLE SOCKET			
CN13		*	E40-5741-05	PIN CONNECTOR (8P)			
CN14		*	E40-5740-05	PIN CONNECTOR (20P)			

PARTS LSIT

RF UNIT (X44-3210-00)

Ref. No.	Address	New parts	Parts No.	Description	Destination
CN15-17			E04-0154-05	RF COAXIAL CABLE SOCKET	
CN500		*	E40-5740-05	PIN CONNECTOR (20P)	
CN501			E40-3237-05	PIN CONNECTOR (2P)	
CN502-505			E04-0154-05	RF COAXIAL CABLE SOCKET (2P)	
CN506			E40-3238-05	PIN CONNECTOR (3P)	
CN508			E40-5606-05	PIN CONNECTOR (3P)	
CN509			E40-5607-05	PIN CONNECTOR (4P)	
CN510			E23-0996-05	TERMINAL (TEST)	
CN800			E40-4463-05	PIN CONNECTOR	
CN801			E40-4464-05	PIN CONNECTOR	
CN901			E40-3300-05	PIN CONNECTOR (3P)	
CN903-907		*	E40-5743-05	FLAT CABLE CONNECTOR (6P)	
J1			E06-0752-05	DIN SOCKET	
J2,3			E13-0166-05	PIN JACK	
J901		*	E11-0462-05	PHONE JACK	
W1		*	E37-0546-05	LEAD WIRE WITH CONNECTOR	
W2		*	E37-0517-05	LEAD WIRE WITH MINIPIN PLUG	
101	2F		F11-1141-04	SHIELDING COVER	
A502	2F		F11-1140-04	SHIELDING CASE	
–			J30-0545-05	SPACER (TO XF1)	
–			J30-0563-05	SPACER (TO XF3, X800)	
CF500,501			L72-0343-05	CERAMIC FILTER (8.4MHZ)	
L1		*	L39-1254-05	COIL	
L2			L19-0324-05	TROIDAL COIL	
L3			L40-1021-14	SMALL FIXED INDUCTOR	
L7			L40-2701-14	SMALL FIXED INDUCTOR	
L8			L40-4791-14	SMALL FIXED INDUCTOR	
L9			L40-2701-14	SMALL FIXED INDUCTOR	
L10			L40-1015-48	SMALL FIXED INDUCTOR (100UH)	
L11			L19-0324-05	TROIDAL COIL	
L12			L40-1005-48	SMALL FIXED INDUCTOR (10UH)	
L13			L40-4705-48	SMALL FIXED INDUCTOR (47UH)	
L14,15			L40-1501-14	SMALL FIXED INDUCTOR	
L16			L40-1021-14	SMALL FIXED INDUCTOR	
L17,18			L40-5691-14	SMALL FIXED INDUCTOR	
L19			L40-1292-14	SMALL FIXED INDUCTOR	
L20			L40-8291-14	SMALL FIXED INDUCTOR	
L21,22			L40-1292-14	SMALL FIXED INDUCTOR	
L23			L40-5691-14	SMALL FIXED INDUCTOR	
L24			L40-1292-14	SMALL FIXED INDUCTOR	
L25			L40-1092-14	SMALL FIXED INDUCTOR	
L26			L40-3391-14	SMALL FIXED INDUCTOR	
L27			L40-1092-14	SMALL FIXED INDUCTOR	
L28-31			L34-4262-05	COIL	
L32			L40-3382-14	SMALL FIXED INDUCTOR	
L33			L40-2792-14	SMALL FIXED INDUCTOR	
L34			L40-3382-14	SMALL FIXED INDUCTOR	
L35			L40-2282-14	SMALL FIXED INDUCTOR	
L36			L40-2292-14	SMALL FIXED INDUCTOR	
L37			L40-2282-14	SMALL FIXED INDUCTOR	
L38-40			L34-4289-05	COIL	
L41			L40-2282-14	SMALL FIXED INDUCTOR	
L42			L40-1292-14	SMALL FIXED INDUCTOR	
L43			L40-2282-14	SMALL FIXED INDUCTOR	
L44-46		*	L34-4392-05	COIL	
L47			L40-2282-14	SMALL FIXED INDUCTOR	
L48			L40-1292-14	SMALL FIXED INDUCTOR	
L49			L40-2282-14	SMALL FIXED INDUCTOR	
L50			L34-4264-05	COIL	
L51			L40-1021-14	SMALL FIXED INDUCTOR	
L52			L34-4265-05	COIL	
L53			L19-0324-05	TROIDAL COIL	
L54			L40-4785-48	SMALL FIXED INDUCTOR (470NH)	
L55			L19-0324-05	TROIDAL COIL	
L56			L40-4705-48	SMALL FIXED INDUCTOR (47UH)	
L57			L40-2785-48	SMALL FIXED INDUCTOR (270NH)	
L58			L40-2285-48	SMALL FIXED INDUCTOR (220NH)	
L59			L19-0324-05	TROIDAL COIL	
L60			L39-1255-05	COIL	
L61			L40-1285-48	SMALL FIXED INDUCTOR (120NH)	
L62			L39-1255-05	COIL	
L63			L40-1015-48	SMALL FIXED INDUCTOR (100NH)	
L64			L39-1255-05	COIL	
L65			L34-4222-05	COIL	
L67		*	L34-4394-05	COIL	
L68			L40-1015-48	SMALL FIXED INDUCTOR (100UH)	
L69			L40-2285-48	SMALL FIXED INDUCTOR (220NH)	
L70		*	L34-4393-05	COIL	
L71			L40-3395-48	SMALL FIXED INDUCTOR (3.3UH)	
L72		*	L34-4394-05	COIL	
L73			L40-2295-48	SMALL FIXED INDUCTOR (2.2UH)	
L74			L40-2285-48	SMALL FIXED INDUCTOR (220NH)	
L75			L34-4209-05	COIL	
L76			L40-3395-48	SMALL FIXED INDUCTOR (3.3UH)	
L77			L34-0943-05	COIL	
L78			L40-4785-48	SMALL FIXED INDUCTOR (470NH)	
L79			L40-3395-48	SMALL FIXED INDUCTOR (3.3UH)	
L81			L34-0535-05	COIL	
L82			L34-0536-05	COIL	
L83,84			L40-1015-48	SMALL FIXED INDUCTOR (100UH)	
L86			L40-2285-48	SMALL FIXED INDUCTOR (220NH)	
L87			L40-4705-48	SMALL FIXED INDUCTOR (47UH)	
L88			L19-0324-05	TROIDAL COIL	
L89		*	L34-4395-05	COIL	
L90			L39-1255-05	COIL	
L91		*	L34-4395-05	COIL	
L92			L34-4211-05	COIL	
L93			L40-1015-48	SMALL FIXED INDUCTOR (100UH)	
L94		*	L34-4395-05	COIL	
L95			L34-4207-05	COIL	
L98			L34-0943-05	COIL	
L99			L34-0781-05	COIL	
L100			L34-0536-05	COIL	
L101			L40-4705-48	SMALL FIXED INDUCTOR (47UH)	
L102			L40-3395-48	SMALL FIXED INDUCTOR (3.3UH)	
L107			L40-1015-48	SMALL FIXED INDUCTOR (100UH)	
L108			L40-1005-48	SMALL FIXED INDUCTOR (10UH)	
L110,111		*	L40-1805-48	SMALL FIXED INDUCTOR (18UH)	
L112,113		*	L40-1081-42	SMALL FIXED INDUCTOR (0.1UH)	
L301		*	L40-1001-42	SMALL FIXED INDUCTOR (10UH)	
L304-310		*	L40-1001-42	SMALL FIXED INDUCTOR (10UH)	
L314-318		*	L40-1001-42	SMALL FIXED INDUCTOR (10UH)	
L500-505			L40-1005-48	SMALL FIXED INDUCTOR (10UH)	
L506,507		*	L40-6805-48	SMALL FIXED INDUCTOR (68UH)	
L508			L40-1005-48	SMALL FIXED INDUCTOR (10UH)	
L509,510		*	L40-2705-48	SMALL FIXED INDUCTOR (27UH)	

PARTS LIST

RF UNIT (X44-3210-00)

Ref. No.	Address	New parts	Parts No.	Description	Destination
L511		*	L40-1805-48	SMALL FIXED INDUCTOR (18UH)	
L512,513		*	L40-2705-48	SMALL FIXED INDUCTOR (27UH)	
L514			L40-2205-48	SMALL FIXED INDUCTOR (22UH)	
L515		*	L40-1805-48	SMALL FIXED INDUCTOR (18UH)	
L516			L40-5695-48	SMALL FIXED INDUCTOR (5.6UH)	
L517			L40-1005-48	SMALL FIXED INDUCTOR (10UH)	
L518			L34-4222-05	COIL	
L519		*	L34-4421-05	COIL	
L520			L34-4222-05	COIL	
L521,522			L40-2285-48	SMALL FIXED INDUCTOR (220NH)	
L523			L40-1005-48	SMALL FIXED INDUCTOR (10UH)	
L524			L40-1095-48	SMALL FIXED INDUCTOR (1UH)	
L525,526			L40-2205-48	SMALL FIXED INDUCTOR (22UH)	
L528		*	L34-4396-05	COIL	
L529,530			L34-4222-05	COIL	
L531-534			L40-1015-48	SMALL FIXED INDUCTOR (100UH)	
L535			L33-0664-05	CHOKE COIL	
L536			L34-2354-05	COIL	
L537			L40-4795-48	SMALL FIXED INDUCTOR (4.7UH)	
L538			L33-0664-05	CHOKE COIL	
L539			L34-2354-05	COIL	
L540			L40-4795-48	SMALL FIXED INDUCTOR (4.7UH)	
L541			L33-0664-05	CHOKE COIL	
L542			L34-2354-05	COIL	
L543			L40-4795-48	SMALL FIXED INDUCTOR (4.7UH)	
L544			L33-0664-05	CHOKE COIL	
L545			L34-2354-05	COIL	
L546			L40-4795-48	SMALL FIXED INDUCTOR (4.7UH)	
L547			L40-3385-48	SMALL FIXED INDUCTOR (330NH)	
L548			L40-1295-48	SMALL FIXED INDUCTOR (1.2UH)	
L549			L40-3385-48	SMALL FIXED INDUCTOR (330NH)	
L550			L40-2285-48	SMALL FIXED INDUCTOR (220NH)	
L551			L40-1015-48	SMALL FIXED INDUCTOR (100NH)	
L552		*	L40-2795-48	SMALL FIXED INDUCTOR (2.7UH)	
L553			L40-1595-48	SMALL FIXED INDUCTOR (1.5UH)	
L554			L40-2295-48	SMALL FIXED INDUCTOR (2.2UH)	
L555			L40-3395-48	SMALL FIXED INDUCTOR (3.3UH)	
L556			L40-2285-48	SMALL FIXED INDUCTOR (220NH)	
L557-559			L40-1015-48	SMALL FIXED INDUCTOR (100UH)	
L580,581			L40-1005-48	SMALL FIXED INDUCTOR (10UH)	
L601			L40-3395-48	SMALL FIXED INDUCTOR (3.3UH)	
L603			L40-2785-48	SMALL FIXED INDUCTOR (270NH)	
L604			L40-1015-48	SMALL FIXED INDUCTOR (100UH)	
X800			L77-1521-15	CRYSTAL RESONATOR (20MHZ)	
XF1			L71-0401-05	CRYSTAL FILTER (73.05MHZ)	
XF2			L71-0235-05	CRYSTAL FILTER	
XF3	—		L71-0266-05	CRYSTAL FILTER (8830KHZ)	
Q	2F		N38-2640-46	PAN HEAD MACHINE SCREW	
CP500-505			R90-0721-05	MULTI-COMP 4.7K X 16	
R1			RD14BB2E470J	RD 47 J 1/4W	
R2			RD14BB2E151J	RD 150 J 1/4W	
R3			RK73FB2A101J	CHIP R 100 J 1/10W	
R5			RD14BB2E101J	RD 100 J 1/4W	
R7			RD14BB2E820J	RD 82 J 1/4W	
R9			RK73FB2A221J	CHIP R 220 J 1/10W	
R10			RK73FB2A181J	CHIP R 180 J 1/10W	
R11,12			RK73FB2A331J	CHIP R 330 J 1/10W	
R13			RK73FB2A470J	CHIP R 47 J 1/10W	

Ref. No.	Address	New parts	Parts No.	Description	Destination
R14			RK73FB2A222J	CHIP R 2.2K J 1/10W	
R18			RK73FB2A103J	CHIP R 10K J 1/10W	
R19			RK73FB2A330J	CHIP R 33 J 1/10W	
R20			RK73FB2A102J	CHIP R 1.0K J 1/10W	
R21,22			RK73FB2A330J	CHIP R 33 J 1/10W	
R23			RK73FB2A101J	CHIP R 100 J 1/10W	
R24			RK73FB2A222J	CHIP R 2.2K J 1/10W	
R25			RK73FB2A561J	CHIP R 560 J 1/10W	
R27			RK73FB2A181J	CHIP R 180 J 1/10W	
R28			RK73FB2A680J	CHIP R 68 J 1/10W	
R31			RK73FB2A103J	CHIP R 10K J 1/10W	
R44-55			RK73FB2A223J	CHIP R 22K J 1/10W	
R56			RK73FB2A121J	CHIP R 120 J 1/10W	
R58			RK73FB2A680J	CHIP R 68 J 1/10W	
R59,60			RK73FB2A560J	CHIP R 56 J 1/10W	
R61			RK73FB2A680J	CHIP R 68 J 1/10W	
R62			RK73FB2A220J	CHIP R 22 J 1/10W	
R63			RK73FB2A121J	CHIP R 120 J 1/10W	
R65			RK73FB2A220J	CHIP R 22 J 1/10W	
R66			RK73FB2A121J	CHIP R 120 J 1/10W	
R68			RK73FB2A220J	CHIP R 22 J 1/10W	
R69			RK73FB2A121J	CHIP R 120 J 1/10W	
R71			RK73FB2A220J	CHIP R 22 J 1/10W	
R72			RK73FB2A121J	CHIP R 120 J 1/10W	
R74			RK73FB2A220J	CHIP R 22 J 1/10W	
R75			RK73FB2A121J	CHIP R 120 J 1/10W	
R77			RK73FB2A220J	CHIP R 22 J 1/10W	
R78			RK73FB2A121J	CHIP R 120 J 1/10W	
R80			RK73FB2A220J	CHIP R 22 J 1/10W	
R81			RK73FB2A121J	CHIP R 120 J 1/10W	
R83			RK73FB2A220J	CHIP R 22 J 1/10W	
R84			RK73FB2A121J	CHIP R 120 J 1/10W	
R86			RK73FB2A220J	CHIP R 22 J 1/10W	
R87			RK73FB2A121J	CHIP R 120 J 1/10W	
R89			RK73FB2A220J	CHIP R 22 J 1/10W	
R90			RK73FB2A121J	CHIP R 120 J 1/10W	
R92			RK73FB2A151J	CHIP R 150 J 1/10W	
R93			RK73FB2A223J	CHIP R 22K J 1/10W	
R94			RK73FB2A104J	CHIP R 100K J 1/10W	
R95			RK73FB2A393J	CHIP R 39K J 1/10W	
R96,97			RK73FB2A330J	CHIP R 33 J 1/10W	
R98			RK73FB2A473J	CHIP R 47K J 1/10W	
R99			RK73FB2A151J	CHIP R 150 J 1/10W	
R100			RK73FB2A331J	CHIP R 330 J 1/10W	
R101			RK73FB2A221J	CHIP R 220 J 1/10W	
R102			RK73FB2A101J	CHIP R 100 J 1/10W	
R103			RK73FB2A473J	CHIP R 47K J 1/10W	
R104,105			RK73FB2A151J	CHIP R 150 J 1/10W	
R106			RK73FB2A152J	CHIP R 1.5K J 1/10W	
R107			RK73FB2A680J	CHIP R 68 J 1/10W	
R108			RK73FB2A220J	CHIP R 22 J 1/10W	
R109			RK73FB2A100J	CHIP R 10 J 1/10W	
R110			RK73FB2A151J	CHIP R 150 J 1/10W	
R111			RK73FB2A471J	CHIP R 470 J 1/10W	
R112			RK73FB2A102J	CHIP R 1.0K J 1/10W	
R113			RK73FB2A471J	CHIP R 470 J 1/10W	
R114			RK73FB2A562J	CHIP R 5.6K J 1/10W	
R115			RK73FB2A220J	CHIP R 22 J 1/10W	
R116			RK73FB2A150J	CHIP R 15 J 1/10W	

PARTS LSIT

RF UNIT (X44-3210-00)

Ref. No.	Address	New parts	Parts No.	Description			Destination
R117			RK73FB2A471J	CHIP R	470	J 1/10W	
R118			RK73FB2A680J	CHIP R	68	J 1/10W	
R119,120			RK73FB2A331J	CHIP R	330	J 1/10W	
R121			RK73FB2A102J	CHIP R	1.0K	J 1/10W	
R122,123			RK73FB2A100J	CHIP R	10	J 1/10W	
R124			RK73FB2A471J	CHIP R	470	J 1/10W	
R125,126			RK73FB2A100J	CHIP R	10	J 1/10W	
R127			RK73FB2A180J	CHIP R	18	J 1/10W	
R128			RK73FB2A331J	CHIP R	330	J 1/10W	
R130			RK73FB2A331J	CHIP R	330	J 1/10W	
R131			RK73FB2A101J	CHIP R	100	J 1/10W	
R132			RK73FB2A223J	CHIP R	22K	J 1/10W	
R133			RK73FB2A333J	CHIP R	33K	J 1/10W	
R134			RK73FB2A122J	CHIP R	1.2K	J 1/10W	
R139			RK73FB2A104J	CHIP R	100K	J 1/10W	
R140			RK73FB2A473J	CHIP R	47K	J 1/10W	
R142			RK73FB2A473J	CHIP R	47K	J 1/10W	
R143			RK73FB2A471J	CHIP R	470	J 1/10W	
R144			RK73FB2A221J	CHIP R	220	J 1/10W	
R145			RK73FB2A330J	CHIP R	33	J 1/10W	
R146			RK73FB2A471J	CHIP R	470	J 1/10W	
R147			RK73FB2A562J	CHIP R	5.6K	J 1/10W	
R148			RK73FB2A223J	CHIP R	22K	J 1/10W	
R150			RK73FB2A181J	CHIP R	180	J 1/10W	
R154			RK73FB2A471J	CHIP R	470	J 1/10W	
R156			RK73FB2A330J	CHIP R	33	J 1/10W	
R157			RK73FB2A182J	CHIP R	1.8K	J 1/10W	
R158			RK73FB2A330J	CHIP R	33	J 1/10W	
R159			RK73FB2A101J	CHIP R	100	J 1/10W	
R160,161			RK73FB2A222J	CHIP R	2.2K	J 1/10W	
R162			RK73FB2A101J	CHIP R	100	J 1/10W	
R163			RK73FB2A332J	CHIP R	3.3K	J 1/10W	
R164			RK73FB2A152J	CHIP R	1.5K	J 1/10W	
R165			RK73FB2A473J	CHIP R	47K	J 1/10W	
R166			RK73FB2A222J	CHIP R	2.2K	J 1/10W	
R167			RK73FB2A101J	CHIP R	100	J 1/10W	
R168			RK73FB2A393J	CHIP R	39K	J 1/10W	
R169			RK73FB2A102J	CHIP R	1.0K	J 1/10W	
R170			RK73FB2A223J	CHIP R	22K	J 1/10W	
R171,172			RK73FB2A101J	CHIP R	100	J 1/10W	
R173			RK73FB2A393J	CHIP R	39K	J 1/10W	
R174			RK73FB2A223J	CHIP R	22K	J 1/10W	
R175			RK73FB2A102J	CHIP R	1.0K	J 1/10W	
R176			RK73FB2A103J	CHIP R	10K	J 1/10W	
R177			RK73FB2A153J	CHIP R	15K	J 1/10W	
R178			RK73FB2A563J	CHIP R	56K	J 1/10W	
R179			RK73FB2A103J	CHIP R	10K	J 1/10W	
R180			RK73FB2A104J	CHIP R	100K	J 1/10W	
R181			RK73FB2A222J	CHIP R	2.2K	J 1/10W	
R182			RK73FB2A103J	CHIP R	10K	J 1/10W	
R183			RK73FB2A470J	CHIP R	47	J 1/10W	
R184			RK73FB2A121J	CHIP R	120	J 1/10W	
R185			RK73FB2A103J	CHIP R	10K	J 1/10W	
R186			RK73FB2A562J	CHIP R	5.6K	J 1/10W	
R188			RK73FB2A470J	CHIP R	47	J 1/10W	
R189			RK73FB2A152J	CHIP R	1.5K	J 1/10W	
R190			RK73FB2A103J	CHIP R	10K	J 1/10W	
R191			RK73FB2A151J	CHIP R	150	J 1/10W	
R192			RK73FB2A102J	CHIP R	1.0K	J 1/10W	

Ref. No.	Address	New parts	Parts No.	Description			Destination
R195,196			RK73FB2A330J	CHIP R	33	J 1/10W	
R197			RK73FB2A273J	CHIP R	27K	J 1/10W	
R198			RK73FB2A103J	CHIP R	10K	J 1/10W	
R199,200			RK73FB2A221J	CHIP R	220	J 1/10W	
R201			RK73FB2A473J	CHIP R	47K	J 1/10W	
R202,203			RK73FB2A680J	CHIP R	68	J 1/10W	
R204			RK73FB2A101J	CHIP R	100	J 1/10W	
R205,206			RK73FB2A471J	CHIP R	470	J 1/10W	
R207,208			RK73FB2A330J	CHIP R	33	J 1/10W	
R209			RK73FB2A471J	CHIP R	470	J 1/10W	
R210			RK73FB2A102J	CHIP R	1.0K	J 1/10W	
R211			RK73FB2A472J	CHIP R	4.7K	J 1/10W	
R212,213			RK73FB2A330J	CHIP R	33	J 1/10W	
R214			RK73FB2A103J	CHIP R	10K	J 1/10W	
R215			RK73FB2A823J	CHIP R	82K	J 1/10W	
R216			RK73FB2A681J	CHIP R	680	J 1/10W	
R217			RK73FB2A151J	CHIP R	150	J 1/10W	
R218			RK73FB2A332J	CHIP R	3.3K	J 1/10W	
R219			RK73FB2A103J	CHIP R	10K	J 1/10W	
R220			RK73FB2A101J	CHIP R	100	J 1/10W	
R221			RK73FB2A102J	CHIP R	1.0K	J 1/10W	
R222			RK73FB2A103J	CHIP R	10K	J 1/10W	
R223			RK73FB2A392J	CHIP R	3.9K	J 1/10W	
R224			RK73FB2A332J	CHIP R	3.3K	J 1/10W	
R225			RK73FB2A223J	CHIP R	22K	J 1/10W	
R226			RK73FB2A562J	CHIP R	5.6K	J 1/10W	
R229			RK73FB2A103J	CHIP R	10K	J 1/10W	
R230			RK73FB2A152J	CHIP R	1.5K	J 1/10W	
R231,232			RK73FB2A221J	CHIP R	220	J 1/10W	
R233			RK73FB2A152J	CHIP R	1.5K	J 1/10W	
R234			RK73FB2A101J	CHIP R	100	J 1/10W	
R235			RK73FB2A152J	CHIP R	1.5K	J 1/10W	
R236,237			RK73FB2A101J	CHIP R	100	J 1/10W	
R238			RK73FB2A152J	CHIP R	1.5K	J 1/10W	
R239			RK73FB2A101J	CHIP R	100	J 1/10W	
R240			RK73FB2A152J	CHIP R	1.5K	J 1/10W	
R241,242			RK73FB2A331J	CHIP R	330	J 1/10W	
R243			RK73FB2A152J	CHIP R	1.5K	J 1/10W	
R244			RK73FB2A101J	CHIP R	100	J 1/10W	
R245			RK73FB2A152J	CHIP R	1.5K	J 1/10W	
R246			RK73FB2A221J	CHIP R	220	J 1/10W	
R248			RK73FB2A822J	CHIP R	8.2K	J 1/10W	
R249			RK73FB2A222J	CHIP R	2.2K	J 1/10W	
R250			RK73FB2A103J	CHIP R	10K	J 1/10W	
R251			RK73FB2A153J	CHIP R	15K	J 1/10W	
R252			RK73FB2A102J	CHIP R	1.0K	J 1/10W	
R253			RK73FB2A472J	CHIP R	4.7K	J 1/10W	
R256			RK73FB2A472J	CHIP R	4.7K	J 1/10W	
R257			RK73FB2A101J	CHIP R	100	J 1/10W	
R258			RK73FB2A331J	CHIP R	330	J 1/10W	
R259			RK73FB2A104J	CHIP R	100K	J 1/10W	
R260			RK73FB2A102J	CHIP R	1.0K	J 1/10W	
R261			RK73FB2A331J	CHIP R	330	J 1/10W	
R262			RK73FB2A102J	CHIP R	1.0K	J 1/10W	
R263			RK73FB2A332J	CHIP R	3.3K	J 1/10W	
R264			RK73FB2A222J	CHIP R	2.2K	J 1/10W	
R265			RK73FB2A272J	CHIP R	2.7K	J 1/10W	
R266			RK73FB2A332J	CHIP R	3.3K	J 1/10W	
R267			RK73FB2A822J	CHIP R	8.2K	J 1/10W	

PARTS LIST

RF UNIT (X44-3210-00)

Ref. No.	Address	New parts	Parts No.	Description			Destination
R268			RK73FB2A273J	CHIP R	27K	J 1/10W	
R269			RK73FB2A103J	CHIP R	10K	J 1/10W	
R271			RK73FB2A224J	CHIP R	220K	J 1/10W	
R272			RK73FB2A104J	CHIP R	100K	J 1/10W	
R276			RK73FB2A474J	CHIP R	470K	J 1/10W	
R277			RK73FB2A103J	CHIP R	10K	J 1/10W	
R278			RK73FB2A224J	CHIP R	220K	J 1/10W	
R279			RK73FB2A473J	CHIP R	47K	J 1/10W	
R280			RK73FB2A223J	CHIP R	22K	J 1/10W	
R281			RK73FB2A222J	CHIP R	2.2K	J 1/10W	
R284			RK73FB2A224J	CHIP R	220K	J 1/10W	
R285			RK73FB2A103J	CHIP R	10K	J 1/10W	
R286			RK73FB2A101J	CHIP R	100	J 1/10W	
R287			RK73FB2A103J	CHIP R	10K	J 1/10W	
R288			RK73FB2A472J	CHIP R	4.7K	J 1/10W	
R289			RK73FB2A103J	CHIP R	10K	J 1/10W	
R290,291			RK73FB2A472J	CHIP R	4.7K	J 1/10W	
R292,293			RK73FB2A681J	CHIP R	680	J 1/10W	
R294-297			RK73FB2A224J	CHIP R	220K	J 1/10W	
R298			RK73FB2A472J	CHIP R	4.7K	J 1/10W	
R320			RK73FB2A472J	CHIP R	4.7K	J 1/10W	
R322,323			RK73FB2A223J	CHIP R	22K	J 1/10W	
R324			RK73FB2A101J	CHIP R	100	J 1/10W	
R325			RK73FB2A102J	CHIP R	1.0K	J 1/10W	
R329			RK73FB2A224J	CHIP R	220K	J 1/10W	
R330			RK73FB2A104J	CHIP R	100K	J 1/10W	
R331			RK73FB2A684J	CHIP R	680K	J 1/10W	
R332			RK73FB2A103J	CHIP R	10K	J 1/10W	
R333			RK73FB2A680J	CHIP R	68	J 1/10W	
R334			RK73FB2A391J	CHIP R	390	J 1/10W	
R335			RK73FB2A272J	CHIP R	2.7K	J 1/10W	
R336,337			RK73FB2A104J	CHIP R	100K	J 1/10W	
R338			RK73FB2A154J	CHIP R	150K	J 1/10W	
R339			RK73FB2A224J	CHIP R	220K	J 1/10W	
R340			RK73FB2A101J	CHIP R	100	J 1/10W	
R351-362			RK73FB2A103J	CHIP R	10K	J 1/10W	
R363			R92-0670-05	CHIP R	0 OHM		
R380			RK73FB2A682J	CHIP R	6.8K	J 1/10W	
R381			RK73FB2A183J	CHIP R	18K	J 1/10W	
R382			RK73FB2A181J	CHIP R	180	J 1/10W	
R383-385			R92-0670-05	CHIP R	0 OHM		
R386			RK73FB2A330J	CHIP R	33	J 1/10W	
R500			RK73FB2A103J	CHIP R	10K	J 1/10W	
R501			RK73FB2A470J	CHIP R	47	J 1/10W	
R502			RK73FB2A331J	CHIP R	330	J 1/10W	
R503			RK73FB2A472J	CHIP R	4.7K	J 1/10W	
R504			RK73FB2A681J	CHIP R	680	J 1/10W	
R505			RK73FB2A561J	CHIP R	560	J 1/10W	
R506			RK73FB2A333J	CHIP R	33K	J 1/10W	
R507			RK73FB2A101J	CHIP R	100	J 1/10W	
R508			RK73FB2A272J	CHIP R	2.7K	J 1/10W	
R509			RK73FB2A681J	CHIP R	680	J 1/10W	
R510			RK73FB2A470J	CHIP R	47	J 1/10W	
R511			RK73FB2A122J	CHIP R	1.2K	J 1/10W	
R512			RK73FB2A472J	CHIP R	4.7K	J 1/10W	
R513			RK73FB2A103J	CHIP R	10K	J 1/10W	
R514			RK73FB2A220J	CHIP R	22	J 1/10W	
R515			RK73FB2A331J	CHIP R	330	J 1/10W	
R516			RK73FB2A560J	CHIP R	56	J 1/10W	

Ref. No.	Address	New parts	Parts No.	Description			Destination
R517-519			RK73FB2A470J	CHIP R	47	J 1/10W	
R520			RK73FB2A101J	CHIP R	100	J 1/10W	
R521			RK73FB2A223J	CHIP R	22K	J 1/10W	
R522			RK73FB2A331J	CHIP R	330	J 1/10W	
R523			RK73FB2A470J	CHIP R	47	J 1/10W	
R524,525			RK73FB2A102J	CHIP R	1.0K	J 1/10W	
R526			RK73FB2A331J	CHIP R	330	J 1/10W	
R527			RK73FB2A680J	CHIP R	68	J 1/10W	
R528			RK73FB2A391J	CHIP R	390	J 1/10W	
R529			RK73FB2A680J	CHIP R	68	J 1/10W	
R530			RK73FB2A103J	CHIP R	10K	J 1/10W	
R531			RK73FB2A222J	CHIP R	2.2K	J 1/10W	
R532			RK73FB2A151J	CHIP R	150	J 1/10W	
R533			RK73FB2A680J	CHIP R	68	J 1/10W	
R534			RK73FB2A101J	CHIP R	100	J 1/10W	
R535			RK73FB2A471J	CHIP R	470	J 1/10W	
R536			RK73FB2A470J	CHIP R	47	J 1/10W	
R537			RK73FB2A220J	CHIP R	22	J 1/10W	
R545			RK73FB2A103J	CHIP R	10K	J 1/10W	
R546			RK73FB2A821J	CHIP R	820	J 1/10W	
R547			RK73FB2A331J	CHIP R	330	J 1/10W	
R548,549			RK73FB2A470J	CHIP R	47	J 1/10W	
R550			RK73FB2A181J	CHIP R	180	J 1/10W	
R551			RK73FB2A221J	CHIP R	220	J 1/10W	
R552			RK73FB2A101J	CHIP R	100	J 1/10W	
R553			RK73FB2A333J	CHIP R	33K	J 1/10W	
R554			RK73FB2A682J	CHIP R	6.8K	J 1/10W	
R555,556			RK73FB2A101J	CHIP R	100	J 1/10W	
R557			RK73FB2A221J	CHIP R	220	J 1/10W	
R558			RK73FB2A101J	CHIP R	100	J 1/10W	
R559,560			RK73FB2A473J	CHIP R	47K	J 1/10W	
R561,562			RK73FB2A101J	CHIP R	100	J 1/10W	
R563			RK73FB2A102J	CHIP R	1.0K	J 1/10W	
R564			RK73FB2A681J	CHIP R	680	J 1/10W	
R565			RK73FB2A101J	CHIP R	100	J 1/10W	
R566			RK73FB2A471J	CHIP R	470	J 1/10W	
R567			RK73FB2A221J	CHIP R	220	J 1/10W	
R570,571			RK73FB2A222J	CHIP R	2.2K	J 1/10W	
R572			RK73FB2A272J	CHIP R	2.7K	J 1/10W	
R580-583			RK73FB2A223J	CHIP R	22K	J 1/10W	
R584			RK73FB2A101J	CHIP R	100	J 1/10W	
R586			RK73FB2A682J	CHIP R	6.8K	J 1/10W	
R587			RK73FB2A473J	CHIP R	47K	J 1/10W	
R588,589			RK73FB2A101J	CHIP R	100	J 1/10W	
R591			RK73FB2A682J	CHIP R	6.8K	J 1/10W	
R592			RK73FB2A473J	CHIP R	47K	J 1/10W	
R593,594			RK73FB2A101J	CHIP R	100	J 1/10W	
R596			RK73FB2A682J	CHIP R	6.8K	J 1/10W	
R597			RK73FB2A473J	CHIP R	47K	J 1/10W	
R598,599			RK73FB2A101J	CHIP R	100	J 1/10W	
R601			RK73FB2A682J	CHIP R	6.8K	J 1/10W	
R602			RK73FB2A473J	CHIP R	47K	J 1/10W	
R603			RK73FB2A101J	CHIP R	100	J 1/10W	
R604			RK73FB2A470J	CHIP R	47	J 1/10W	
R605			RK73FB2A392J	CHIP R	3.9K	J 1/10W	
R606			RK73FB2A103J	CHIP R	10K	J 1/10W	
R608			RK73FB2A471J	CHIP R	470	J 1/10W	
R609,610			RK73FB2A103J	CHIP R	10K	J 1/10W	
R611			RK73FB2A102J	CHIP R	1.0K	J 1/10W	

PARTS LSIT

RF UNIT (X44-3210-00)

Ref. No.	Address	New parts	Parts No.	Description	Destination
R612			RK73FB2A821J	CHIP R 820 J 1/10W	
R613			RK73FB2A271J	CHIP R 270 J 1/10W	
R614			RK73FB2A101J	CHIP R 100 J 1/10W	
R615			RK73FB2A220J	CHIP R 22 J 1/10W	
R616			RK73FB2A470J	CHIP R 47 J 1/10W	
R617			RK73FB2A392J	CHIP R 3.9K J 1/10W	
R618			RK73FB2A103J	CHIP R 10K J 1/10W	
R619			RK73FB2A220J	CHIP R 22 J 1/10W	
R620			RK73FB2A471J	CHIP R 470 J 1/10W	
R621			RK73FB2A183J	CHIP R 18K J 1/10W	
R622			RK73FB2A122J	CHIP R 1.2K J 1/10W	
R623			RK73FB2A102J	CHIP R 1.0K J 1/10W	
R624			RK73FB2A334J	CHIP R 330K J 1/10W	
R625			RK73FB2A182J	CHIP R 1.8K J 1/10W	
R626			RK73FB2A331J	CHIP R 330 J 1/10W	
R627			RK73FB2A102J	CHIP R 1.0K J 1/10W	
R628			RK73FB2A101J	CHIP R 100 J 1/10W	
R629			RK73FB2A821J	CHIP R 820 J 1/10W	
R630			RK73FB2A822J	CHIP R 8.2K J 1/10W	
R631			RK73FB2A103J	CHIP R 10K J 1/10W	
R632			RK73FB2A102J	CHIP R 1.0K J 1/10W	
R633			RK73FB2A181J	CHIP R 180 J 1/10W	
R634			RK73FB2A331J	CHIP R 330 J 1/10W	
R635			RK73FB2A823J	CHIP R 82K J 1/10W	
R636			RK73FB2A333J	CHIP R 33K J 1/10W	
R637			RK73FB2A101J	CHIP R 100 J 1/10W	
R638			RK73FB2A470J	CHIP R 47 J 1/10W	
R639			RK73FB2A682J	CHIP R 6.8K J 1/10W	
R640			RK73FB2A102J	CHIP R 1.0K J 1/10W	
R64*			RK73FB2A151J	CHIP R 150 J 1/10W	
R642			RK73FB2A150J	CHIP R 15 J 1/10W	
R643			RK73FB2A471J	CHIP R 470 J 1/10W	
R644			RK73FB2A103J	CHIP R 10K J 1/10W	
R645			RK73FB2A392J	CHIP R 3.9K J 1/10W	
R646			RK73FB2A822J	CHIP R 8.2K J 1/10W	
R647			RK73FB2A102J	CHIP R 1.0K J 1/10W	
R648			RK73FB2A684J	CHIP R 680K J 1/10W	
R649			RK73FB2A182J	CHIP R 1.8K J 1/10W	
R650			RK73FB2A103J	CHIP R 10K J 1/10W	
R651			RK73FB2A472J	CHIP R 4.7K J 1/10W	
R652			RK73FB2A103J	CHIP R 10K J 1/10W	
R653			RK73FB2A104J	CHIP R 100K J 1/10W	
R655-656			RK73FB2A103J	CHIP R 10K J 1/10W	
R657			RK73FB2A471J	CHIP R 470 J 1/10W	
R658			RK73FB2A101J	CHIP R 100 J 1/10W	
R659			RK73FB2A470J	CHIP R 47 J 1/10W	
R690-697			RK73FB2A221J	CHIP R 220 J 1/10W	
R699			RK73FB2A102J	CHIP R 1.0K J 1/10W	
R710-712			RK73FB2A103J	CHIP R 10K J 1/10W	
R800			RK73FB2A223J	CHIP R 22K J 1/10W	
R801			RK73FB2A103J	CHIP R 10K J 1/10W	
R802			RK73FB2A222J	CHIP R 2.2K J 1/10W	
R803			RK73FB2A271J	CHIP R 270 J 1/10W	
R804			RK73FB2A101J	CHIP R 100 J 1/10W	
R901-902			RK73FB2A101J	CHIP R 100 J 1/10W	
R903-906			RK73FB2A101J	CHIP R 100 J 1/10W	
R908-920			RK73FB2A101J	CHIP R 100 J 1/10W	
R925-928			RK73EB2B221J	CHIP R 220 J 1/8W	
VR2			R12-6417-05	TRIMMING POT. 1K	

Ref. No.	Address	New parts	Parts No.	Description	Destination
VR3			R12-6427-05	TRIMMING POT. 47K	
VR901-904		*	R31-0605-05	VARIABLE RESISTOR 100K	
VR905,906		*	R31-0606-05	VARIABLE RESISTOR 10K	
K1-3			S51-1428-05	RELAY	
K4			S51-1420-05	RELAY	
S800			S31-2420-05	SLIDE SWITCH	
D1-3			LFB01	DIODE	
D4-7			RLS245	DIODE	
D8			1SV128	DIODE	
D10			LFB01	DIODE	
D11			1SV128	DIODE	
D12			RLS135	DIODE	
D13			1SV128	DIODE	
D14			RLS135	DIODE	
D15			1SV128	DIODE	
D16			RLS135	DIODE	
D17			1SV128	DIODE	
D18			RLS135	DIODE	
D19			1SV128	DIODE	
D20			RLS135	DIODE	
D21			1SV128	DIODE	
D22			RLS135	DIODE	
D23			1SV128	DIODE	
D24			RLS135	DIODE	
D25			1SV128	DIODE	
D26			RLS135	DIODE	
D27			1SV128	DIODE	
D28			RLS135	DIODE	
D29			1SV128	DIODE	
D30			RLS135	DIODE	
D31			1SV128	DIODE	
D32			RLS135	DIODE	
D33			1SV128	DIODE	
D35			RLS135	DIODE	
D36			1SV128	DIODE	
D37			RLS135	DIODE	
D38,39			1SV128	DIODE	
D40			RLS135	DIODE	
D41			1SV128	DIODE	
D42,43			DAN235K	DIODE	
D46			HSM88ASR	DIODE	
D47			LFB01	DIODE	
D49			1SV172	DIODE	
D50			RD6.2M(B1)	ZENER DIODE	
D51			B30-2004-05	LED	
D52			RD12M(B2)	ZENER DIODE	
D53,54			1SS355	DIODE	
D55			RD3.0M(B2)	ZENER DIODE	
D56			1SS355	DIODE	
D57			B30-2004-05	LED	
D58			LFB01	DIODE	
D59			1SS355	DIODE	
D60,61			DAN202K	DIODE	
D62-69			1SV128	DIODE	
D70			RD6.2M(B1)	ZENER DIODE	
D71			RD4.7M(B2)	ZENER DIODE	
D72			1SS355	DIODE	
D500			1SV166	DIODE	

PARTS LIST

RF UNIT (X44-3210-00)
FINAL UNIT (X45-351X-XX)

Ref. No.	Address	New parts	Parts No.	Description	Destination
D501			RLS73	DIODE	
D502			1SV166	DIODE	
D503			RLS73	DIODE	
D504			1SV166	DIODE	
D505			RLS73	DIODE	
D506			1SV166	DIODE	
D507			RLS73	DIODE	
D508			1SS181	DIODE	
IC1,2			TC9174F	IC (CMOS I/O EXTENSION)	
IC6			NJM2904M	IC (OP AMP X2)	
IC7			M62363FP	IC (8bit D/A CONVERTER)	
IC8			NJM2902M	IC (OP AMP X4)	
IC9			NJM2903M	IC (COMPARATOR X2)	
IC10			NJM78L05UA	IC (VOLTAGE REGULATOR/ +5V)	
IC500-502			F71022	IC (DDS)	
IC503			UPD74HC390G	IC (DUAL DECADE COUNTER)	
IC505,506			SN16913P	IC (DUBLE BALANCED MIXERS)	
IC507			MB86001PF	IC	
IC508			SN76514N	IC (MIXER)	
IC509			MB86001PF	IC	
IC510			TA78L09F	IC (VOLTAGE REGULATOR/ +9V)	
IC511		*	TA78DS09F	IC	
PL1,2		*	B30-2134-05	LAMP	
Q1			DTA124EK	DIGITAL TRANSISTOR	
Q2			DTC124EK	DIGITAL TRANSISTOR	
Q3			FMA1	TRANSISTOR	
Q5			2SC2954	TRANSISTOR	
Q6			2SC2712(Y)	TRANSISTOR	
Q7-12			FMG4	TRANSISTOR	
Q13			3SK131(M)	FET	
Q14,15		*	2SK2218(5)	FET	
Q16			2SC2954	TRANSISTOR	
Q17-20			2SK520(K44)	FET	
Q21			2SD1624(S)	TRANSISTOR	
Q22			2SC2714(Y)	TRANSISTOR	
Q23,24			3SK131(M)	FET	
Q26,27			2SK520(K43)	FET	
Q28-32			2SC2712(Y)	TRANSISTOR	
Q33			3SK131(M)	FET	
Q35,36			3SK184(R)	FET	
Q37-39			3SK131(M)	FET	
Q42			DTC124EK	DIGITAL TRANSISTOR	
Q43,44			2SC2712(Y)	TRANSISTOR	
Q45,46			DTC143TK	DIGITAL TRANSISTOR	
Q47			2SC2712(Y)	TRANSISTOR	
Q48			DTA124EK	DIGITAL TRANSISTOR	
Q49			2SC2712(Y)	TRANSISTOR	
Q50			2SK208(Y)	FET	
Q51			DTC124EK	DIGITAL TRANSISTOR	
Q52			2SC2712(Y)	TRANSISTOR	
Q54			2SC2712(Y)	TRANSISTOR	
Q55			2SB1188(Q,R)	TRANSISTOR	
Q56			DTC124EK	DIGITAL TRANSISTOR	
Q57,58			2SB1188(Q,R)	TRANSISTOR	
Q59,60			DTC143EK	DIGITAL TRANSISTOR	
Q61			FMC3	TRANSISTOR	
Q62			DTA143EK	DIGITAL TRANSISTOR	
Q63			FMC3	TRANSISTOR	
Q64			DTA143EK	DIGITAL TRANSISTOR	

Ref. No.	Address	New parts	Parts No.	Description	Destination
Q65			2SA1162(Y)	TRANSISTOR	
Q66			DTC114EK	DIGITAL TRANSISTOR	
Q70			DTC114EK	DIGITAL TRANSISTOR	
Q71			DTA114EK	DIGITAL TRANSISTOR	
Q500-503			2SC2712(Y)	TRANSISTOR	
Q504,505			2SK508NV(K53)	FET	
Q506-508			2SC2712(Y)	TRANSISTOR	
Q510,511			2SC2712(Y)	TRANSISTOR	
Q512-514			2SC2714(Y)	TRANSISTOR	
Q515			2SC2712(Y)	TRANSISTOR	
Q516-519			DTC114EK	DIGITAL TRANSISTOR	
Q520-523			2SK508NV(K53)	FET	
Q524,525			2SC2714(Y)	TRANSISTOR	
Q526			2SC2996(Y,O)	TRANSISTOR	
Q527-529			2SC3722K(R)	TRANSISTOR	
Q530			2SC2712(Y)	TRANSISTOR	
Q531			2SC2714(Y)	TRANSISTOR	
Q532			2SC2954	TRANSISTOR	
Q533			DTA124EK	DIGITAL TRANSISTOR	
Q534-536			2SC3722K(R)	TRANSISTOR	
Q537			2SD1757K	TRANSISTOR	
Q539			2SC2714(Y)	TRANSISTOR	
Q800			2SC2714(Y)	TRANSISTOR	
TH1			157-101-53019	THERMISTOR 100	
TH2			157-302-53008	THERMISTOR 3K	
TH3			157-101-53019	THERMISTOR 100	
TH4			157-302-53008	THERMISTOR 3K	
S901,902			W02-1687-15	ENCODER (FILTER)	
S903		*	W02-1861-05	ENCODER (RIT/XIT)	
S904			W02-1660-15	ENCODER (M.CH/VFO.CH)	
A501	2F		X58-3390-03	SUB UNIT (VCO2)	

FINAL UNIT (X45-351X-XX) 0-00 : K,P,M,M2,X 2-71 : E,E2,E3,E9

C1			CK73FF1H473Z	CHIP C	0.047UF	Z
C2			CC73FCH1H101J	CHIP C	100PF	J
C3			CC45FCH2H030C	CERAMIC	3.0PF	C
C4			CC73FCH1H560J	CHIP C	56PF	J
C5			CK73FF1H473Z	CHIP C	0.047UF	Z
C6			CE04EW1H010M	ELECTRO	1.0UF	50WV
C7			CK73FB1H103K	CHIP C	0.010UF	K
C8-18			CK73FB1H102K	CHIP C	1000PF	K
C19-33			CK73FB1H103K	CHIP C	0.010UF	K
C101			CM93D2H102J	MICA	1000PF	J
C102			CC45FSL2H331J	CERAMIC	330PF	J
C103			CC45FSL2H271J	CERAMIC	270PF	J
C104,105			CM93D2H102J	MICA	1000PF	J
C106			CC45FSL2H151J	CERAMIC	150PF	J
C107			CM93D2H222J	MICA	2200PF	J
C108		*	CC45FSL2H181J	CERAMIC	180PF	J
C109			CC45FSL2H101J	CERAMIC	100PF	J
C110			CM93D2H102J	MICA	1000PF	J
C111			CM93D2H561J	MICA	560PF	J
C112			CC45FSL2H471J	CERAMIC	470PF	J
C113,114		*	CC45FSL2H181J	CERAMIC	180PF	J
C115			CC45FSL2H391J	CERAMIC	390PF	J
C116			CC45FSL2H471J	CERAMIC	470PF	J

PARTS LSIT

FINAL UNIT (X45-351X-XX)

Ref. No.	Address	New parts	Parts No.	Description			Destination
C117			CC45FSL2H271J	CERAMIC	270PF	J	
C118			CC45FSL2H391J	CERAMIC	390PF	J	
C119			CC45FSL2H471J	CERAMIC	470PF	J	
C120		*	CC45FSL2H181J	CERAMIC	180PF	J	
C121			CC45FSL2H331J	CERAMIC	330PF	J	
C122			CC45FSL2H820J	CERAMIC	82PF	J	
C123			CC45FSL2H331J	CERAMIC	330PF	J	
C124			CC45FSL2H121J	CERAMIC	120PF	J	
C125			CC45FSL2H270J	CERAMIC	27PF	J	
C126			CC45FSL2H151J	CERAMIC	150PF	J	
C127			CC45FSL2H471J	CERAMIC	470PF	J	
C128			CC45FSL2H270J	CERAMIC	27PF	J	
C129			CC45FSL2H220J	CERAMIC	22PF	J	
C130			CC45FSL2H331J	CERAMIC	330PF	J	
C131			CC45FSL2H471J	CERAMIC	470PF	J	
C132			CC45FSL2H680J	CERAMIC	68PF	J	
C133			CC45FSL2H560J	CERAMIC	56PF	J	
C134			CC45FSL2H151J	CERAMIC	150PF	J	
C135			CC45FSL2H471J	CERAMIC	470PF	J	
C136			CC45FSL2H560J	CERAMIC	56PF	J	
C137			CC45FSL2H151J	CERAMIC	150PF	J	
C138			CC45FSL2H331J	CERAMIC	330PF	J	
C139			CC45FSL2H330J	CERAMIC	33PF	J	
C140,141			CC45FSL2H221J	CERAMIC	220PF	J	
C142			CC45FSL2H101J	CERAMIC	100PF	J	
C143,144			CC45FSL2H151J	CERAMIC	150PF	J	
C145			CC45FSL2H120J	CERAMIC	12PF	J	
C146			CC45FSL2H271J	CERAMIC	270PF	J	
C147			CC45FSL2H390J	CERAMIC	39PF	J	
C148,149			CC45FSL2H820J	CERAMIC	82PF	J	
C150			CC45FSL2H100D	CERAMIC	10PF	D	
C151			CC45FSL2H121J	CERAMIC	120PF	J	
C152			CC45FSL2H470J	CERAMIC	47PF	J	
C153			CC45FSL2H330J	CERAMIC	33PF	J	
C154			CC45FSL2H820J	CERAMIC	82PF	J	
C161			CC45FSL2H100D	CERAMIC	10PF	D	
C162		*	CC45FSL2H090D	CERAMIC	9.0PF	D	
C163			CC45FSL2H270J	CERAMIC	27PF	J	
C301,302			CK73FB1H103K	CHIP C	0.010UF	K	
C304			CC73FCH1H101J	CHIP C	100PF	J	
C305			CC73FCH1H181J	CHIP C	180PF	J	
C306			CC73FCH1H390J	CHIP C	39PF	J	
C401			CE04EW1C470M	ELECTRO	47UF	16WV	
C402			CE04EW1C100M	ELECTRO	10UF	16WV	
C405			CE04EW1E470M	ELECTRO	47UF	25WV	
C406,407			CK73FB1E104K	CHIP C	0.10UF	K	
C408			CE04EW1E470M	ELECTRO	47UF	25WV	
C409			CK73FB1E104K	CHIP C	0.10UF	K	
C410			CE04EW1C470M	ELECTRO	47UF	16WV	
C411			CK73FB1H103K	CHIP C	0.010UF	K	
C412,413			CK73FB1H222K	CHIP C	2200PF	K	
C414			CE04EW1C330M	ELECTRO	33UF	16WV	
C415,416			CE04EW1C101M	ELECTRO	100UF	16WV	
C417			CK73FB1H103K	CHIP C	0.010UF	K	
C418-420			CK73FB1H102K	CHIP C	1000PF	K	
C421			CK73FB1H103K	CHIP C	0.010UF	K	
C422			CE04EW1E470M	ELECTRO	47UF	25WV	
C431-433			CK73FB1H103K	CHIP C	0.010UF	K	
C435			CK73FB1E104K	CHIP C	0.10UF	K	

Ref. No.	Address	New parts	Parts No.	Description			Destination
C436			CK73FB1H102K	CHIP C	1000PF	K	
C437			CK73FB1H103K	CHIP C	0.010UF	K	
C438			CE04EW1H010M	ELECTRO	1.0UF	50WV	
C439			CK73FB1H103K	CHIP C	0.010UF	K	
C450			CK73FB1H103K	CHIP C	0.010UF	K	
C452-454			CK73FB1H103K	CHIP C	0.010UF	K	
C455			CK73FB1H102K	CHIP C	1000PF	K	
C456-458			CK73FB1H103K	CHIP C	0.010UF	K	
C461			CC73FSL1H221J	CHIP C	220PF	J	
C465			CK73FB1E104K	CHIP C	0.10UF	K	
C466-471			CK73FF1C105Z	CHIP C	1.0UF	Z	
C472,473			CK73FB1E104K	CHIP C	0.10UF	K	
C479			CE04EW1H010M	ELECTRO	1.0UF	50WV	
C480-485			CK73FB1H103K	CHIP C	0.010UF	K	
C486-488			CK73FB1E104K	CHIP C	0.10UF	K	
C489			CC73FCH1H470J	CHIP C	47PF	J	
C490,491			CK73FB1H103K	CHIP C	0.010UF	K	
C492			CK73FB1E104K	CHIP C	0.10UF	K	
C493			CK73FB1H103K	CHIP C	0.010UF	K	
C494-496			CK73FB1E104K	CHIP C	0.10UF	K	
C497-499			CK73FB1H103K	CHIP C	0.010UF	K	
C502			CK73FB1E473K	CHIP C	0.047UF	K	
C503			CK73FB1H102K	CHIP C	1000PF	K	
C504,505			CK73FB1E473K	CHIP C	0.047UF	K	
C506			CK73FB1E223K	CHIP C	0.022UF	K	
C507			CK73FB1H681K	CHIP C	680PF	K	
C508,509			CK73FB1E473K	CHIP C	0.047UF	K	
C510,511			CK73FB1E223K	CHIP C	0.022UF	K	
C512			CE04EW1C100M	ELECTRO	10UF	16WV	
C513			CC45FSL2H151J	CERAMIC	150PF	J	
C514,515			CK73FB1E223K	CHIP C	0.022UF	K	
C516			CE04EW1E101M	ELECTRO	100UF	25WV	
C517			CM93D2H681J	MICA	680PF	J	
C518,519			C91-1004-05	CHIP C	6800PF	J	
C520			CK73FB1H102K	CHIP C	1000PF	K	
C521			CK73FB1E473K	CHIP C	0.047UF	K	
C522			CE04EW1C100M	ELECTRO	10UF	16WV	
C523			CK73FB1E223K	CHIP C	0.022UF	K	
C524			CE04EW1E470M	ELECTRO	47UF	25WV	
C525			CM73F2H122J	CHIP C	1200PF	J	
C526			CC45FSL2H151J	CERAMIC	150PF	J	
C527			CE04EW1E101M	ELECTRO	100UF	25WV	
C528,529			CK73FB1E104K	CHIP C	0.10UF	K	
C533			CM73F2H561J	CHIP C	560PF	J	
C550			CK73FB1E104K	CHIP C	0.10UF	K	
C551			CK73FB1H103K	CHIP C	0.010UF	K	
C552,553			CK73FB1H102K	CHIP C	1000PF	K	
C554			CK73FB1H223K	CHIP C	0.022UF	K	
C557			CK73FB1H102K	CHIP C	1000PF	K	
C558			CK73FB1H103K	CHIP C	0.010UF	K	
C559			CK73FB1E104K	CHIP C	0.10UF	K	
C560-563		*	C91-1171-05	HV C	0.01UF	1KWV	
C601			CK73FB1H103K	CHIP C	0.010UF	K	
C602			CE04EW1E102M	ELECTRO	1000UF	25WV	
C603			CK73FB1H103K	CHIP C	0.010UF	K	
C605,606			CK73FB1H103K	CHIP C	0.010UF	K	
C608,609			CK73FB1E104K	CHIP C	0.10UF	K	
C610,611			CK73FB1E473K	CHIP C	0.047UF	K	
C612,613			CE04EW1E470M	ELECTRO	47UF	25WV	

PARTS LIST

Ref. No.	Address	New parts	Parts No.	Description	Destination
C614			CE04EW1E102M	ELECTRO 1000UF 25WV	
C620			CK73FF1E104Z	CHIP C 0.10UF Z	
C621,622			CE04EW1E470M	ELECTRO 47UF 25WV	
C623			CK73FF1E104Z	CHIP C 0.10UF Z	
C701-711			CK73FB1H103K	CHIP C 0.010UF K	
C712			CE04EW1C471M	ELECTRO 470UF 16WV	
C713			CK73FB1E103K	CHIP C 0.010UF K	
C901			CK73FB1H103K	CHIP C 0.010UF K	
C903			CE04EW1H2R2M	ELECTRO 2.2UF 50WV	
TC1			C05-0030-15	TRIMMER CAPACITOR 20PF	
CN1,2			E04-0191-05	RF COAXIAL CABLE SOCKET	
CN3			E40-5469-05	FLAT CABLE CONNECTOR (12P)	
CN4			E40-5068-05	PIN CONNECTOR (11P)	
CN5			E23-0996-05	TERMINAL (TEST)	
CN301			E40-3238-05	PIN CONNECTOR (3P)	
CN302-305			E04-0191-05	RF COAXIAL CABLE SOCKET	
CN306,307			E23-0996-05	TERMINAL (TEST)	
CN401			E23-5745-05	FLAT CABLE CONNECTOR (20P)	
CN402			E40-5469-05	FLAT CABLE CONNECTOR (12P)	
CN403			E40-3242-05	PIN CONNECTOR (7P)	
CN404			E40-3237-05	PIN CONNECTOR (2P)	
CN405			E40-3239-05	PIN CONNECTOR (4P)	
CN406			E40-5470-05	FLAT CABLE CONNECTOR (13P)	
CN407			E40-3240-05	PIN CONNECTOR (5P)	
CN410			E04-0154-05	RF COAXIAL CABLE SOCKET	
CN411			E40-3239-05	PIN CONNECTOR (4P)	
CN412			E04-0154-05	RF COAXIAL CABLE SOCKET	
CN413			E40-3238-05	PIN CONNECTOR (3P)	
CN501,502			E04-0191-05	RF COAXIAL CABLE SOCKET	
CN503			E40-3240-05	PIN CONNECTOR (5P)	
CN504			E40-3238-05	PIN CONNECTOR (3P)	
CN505-507			E23-0996-05	TERMINAL (TEST)	
CN601			E40-3238-05	PIN CONNECTOR (3P)	
CN602			E40-3239-05	PIN CONNECTOR (4P)	
CN603			E40-5470-05	FLAT CABLE CONNECTOR (13P)	
CN604			E40-3240-05	PIN CONNECTOR (5P)	
CN605			E40-3237-05	PIN CONNECTOR (2P)	
W1	1J,2K	*	E37-0539-05	LEAD WIRE WITH CONNECTOR	
W501	1J,2J	*	E37-0525-05	LEAD WIRE WITH TERMINALR	
W502	2J		E37-0067-05	LEAD WIRE WITH MINIPIN PLUG	
202	2G		F29-0014-05	INSULATING BUSH	
F401			F06-4029-05	FUSE (4A 250V) : C/5	
F601			F53-0093-05	FUSE (5A 125V) : D/5	
A401,402			J13-0075-05	FUSE CLIP : C/5	
CF451			L72-0319-05	CERAMIC FILTER (455KHZ)	
CF452			L72-0333-05	CERAMIC FILTER (455KHZ)	
CF453			L72-0366-05	CERAMIC FILTER (455KHZ)	
L1			L40-2221-33	SMALL FIXED INDUCTOR	
L2			L39-0480-15	TROIDAL COIL	
L3			L40-2221-33	SMALL FIXED INDUCTOR	
L4-10			L40-1015-48	SMALL FIXED INDUCTOR (100UH)	
L101			L39-0491-05	TROIDAL COIL (CORE : L92-0107-05)	
L102			L39-0492-05	TROIDAL COIL (CORE : L92-0107-05)	
L103			L39-0493-05	TROIDAL COIL (CORE : L92-0107-05)	
L104			L39-1223-05	TROIDAL COIL (CORE : L92-0107-05)	
L105			L39-1224-05	TROIDAL COIL (CORE : L92-0107-05)	
L106			L39-1225-05	TROIDAL COIL (CORE : L92-0107-05)	
L107			L39-1222-05	TROIDAL COIL (CORE : L92-0107-05)	

Ref. No.	Address	New parts	Parts No.	Description	Destination
L108			L39-1223-05	TROIDAL COIL (CORE : L92-0107-05)	
L109,110			L39-1221-05	TROIDAL COIL (CORE : L92-0108-05)	
L111			L34-1279-05	COIL	
L112			L34-1281-05	COIL	
L113			L34-1279-05	COIL	
L114			L34-1280-05	COIL	
L115			L34-1281-05	COIL	
L116			L34-1282-05	COIL	
L301,302			L40-1015-48	SMALL FIXED INDUCTOR (100UH)	
L303,304			L34-1035-05	COIL	
L401			L40-1015-48	SMALL FIXED INDUCTOR (100UH)	
L450			L40-2215-48	SMALL FIXED INDUCTOR (220UH)	
L451			L34-0943-05	COIL	
L452			L34-4255-05	COIL	
L453		*	L40-4711-15	SMALL FIXED INDUCTOR	
L454			L40-2221-33	SMALL FIXED INDUCTOR	
L455,456			L34-4254-05	COIL	
L457,458			L34-4255-05	COIL	
L460			L40-3395-48	SMALL FIXED INDUCTOR (3.3UH)	
L461-465			L40-1092-12	SMALL FIXED INDUCTOR	
L466			L40-1592-15	SMALL FIXED INDUCTOR	
L501		*	L40-1505-48	SMALL FIXED INDUCTOR (15UH)	
L502			L40-3395-48	SMALL FIXED INDUCTOR (3.3UH)	
L503			L39-0481-05	TROIDAL COIL	
L504			L33-0617-15	CHOKE COIL	
L505,506			L33-0699-05	CHOKE COIL	
L507			L39-1257-05	TROIDAL COIL	
L508,509			L33-0617-15	CHOKE COIL	
L510			L39-0482-05	TROIDAL COIL	
L511			L33-0651-05	CHOKE COIL	
L512			L33-0617-15	CHOKE COIL	
L513			L39-1209-25	TROIDAL COIL	
L514		*	L40-1505-48	SMALL FIXED INDUCTOR (15UH)	
L515,516		*	L92-0150-05	TROIDAL CORE (W501)	
L520			L40-3985-48	SMALL FIXED INDUCTOR (390NH)	
L601			L40-1005-48	SMALL FIXED INDUCTOR (10UH)	
L602			L40-1092-12	SMALL FIXED INDUCTOR	
R	2G,2H		N67-3010-46	PAN HEAD SEMS SCREW	
K	2G,2H		N87-3006-46	BRAZIER HEAD TAPTITE SCREW	
R1			RK73FB2A100J	CHIP R 10 J 1/10W	
R2-5			RK73FB2A330J	CHIP R 33 J 1/10W	
R6-9			RK73FB2A270J	CHIP R 27 J 1/10W	
R10			RK73FB2A181J	CHIP R 180 J 1/10W	
R11-13			RK73FB2A101J	CHIP R 100 J 1/10W	
R14			RK73FB2A473J	CHIP R 47K J 1/10W	
R15			RK73FB2A103J	CHIP R 10K J 1/10W	
R20			RK73FB2A393J	CHIP R 39K J 1/10W	
R21			RK73FB2A223J	CHIP R 22K J 1/10W	
R22			RK73FB2A104J	CHIP R 100K J 1/10W	
R301-304			RK73FB2A104J	CHIP R 100K J 1/10W	
R305			RK73FB2A473J	CHIP R 47K J 1/10W	
R401			RK73FB2A100J	CHIP R 10 J 1/10W	
R402			RK73FB2A272J	CHIP R 2.7K J 1/10W	
R403,404			RK73FB2A273J	CHIP R 27K J 1/10W	
R405			RK73FB2A473J	CHIP R 47K J 1/10W	
R406			RK73FB2A150J	CHIP R 15 J 1/10W	
R407			RK73FB2A221J	CHIP R 220 J 1/10W	
R408			RK73FB2A101J	CHIP R 100 J 1/10W	

PARTS LSIT

FINAL UNIT (X45-351X-XX)

Ref. No.	Address	New parts	Parts No.	Description	Destination
R409,410			R92-1332-05	CHIP R 160 J 1W	
R411			RK73FB2A182J	CHIP R 1.8K J 1/10W	
R415			RK73FB2A101J	CHIP R 100 J 1/10W	
R416			RK73FB2A220J	CHIP R 22 J 1/10W	
R417			RK73FB2A101J	CHIP R 100 J 1/10W	
R418			RK73FB2A102J	CHIP R 1.0K J 1/10W	
R419			RK73FB2A104J	CHIP R 100K J 1/10W	
R420			RK73FB2A102J	CHIP R 1.0K J 1/10W	
R421			RK73FB2A393J	CHIP R 39K J 1/10W	
R422			RK73FB2A220J	CHIP R 22 J 1/10W	
R423,424			RK73FB2A331J	CHIP R 330 J 1/10W	
R425			RK73FB2A220J	CHIP R 22 J 1/10W	
R426			RK73FB2A103J	CHIP R 10K J 1/10W	
R427			RK73FB2A102J	CHIP R 1.0K J 1/10W	
R428			RK73FB2A222J	CHIP R 2.2K J 1/10W	
R429			RK73FB2A102J	CHIP R 1.0K J 1/10W	
R439			RK73FB2A470J	CHIP R 47 J 1/10W	
R440			RK73FB2A152J	CHIP R 1.5K J 1/10W	
R441,442			RK73FB2A332J	CHIP R 3.3K J 1/10W	
R443,444			RK73FB2A101J	CHIP R 100 J 1/10W	
R445,446			RK73FB2A472J	CHIP R 4.7K J 1/10W	
R447,448			RK73FB2A101J	CHIP R 100 J 1/10W	
R449,450			RK73FB2A222J	CHIP R 2.2K J 1/10W	
R451,452			RK73FB2A101J	CHIP R 100 J 1/10W	
R453			RK73FB2A152J	CHIP R 1.5K J 1/10W	
R454,455			RK73FB2A332J	CHIP R 3.3K J 1/10W	
R456			RK73FB2A333J	CHIP R 33K J 1/10W	
R457,458			RK73FB2A104J	CHIP R 100K J 1/10W	
R459			RK73FB2A471J	CHIP R 470 J 1/10W	
R460			RK73FB2A220J	CHIP R 22 J 1/10W	
R461			RK73FB2A102J	CHIP R 1.0K J 1/10W	
R462			RK73FB2A101J	CHIP R 100 J 1/10W	
R463,464			RK73FB2A151J	CHIP R 150 J 1/10W	
R465,466			RK73FB2A471J	CHIP R 470 J 1/10W	
R467-470			RK73FB2A330J	CHIP R 33 J 1/10W	
R471			RK73FB2A102J	CHIP R 1.0K J 1/10W	
R472			RK73FB2A104J	CHIP R 100K J 1/10W	
R473			RK73FB2A473J	CHIP R 47K J 1/10W	
R474			RK73FB2A104J	CHIP R 100K J 1/10W	
R475			RK73FB2A473J	CHIP R 47K J 1/10W	
R476			RK73FB2A472J	CHIP R 4.7K J 1/10W	
R480			RK73FB2A470J	CHIP R 47 J 1/10W	
R481			RK73FB2A471J	CHIP R 470 J 1/10W	
R482			RK73FB2A330J	CHIP R 33 J 1/10W	
R483			RK73FB2A221J	CHIP R 220 J 1/10W	
R484			RK73FB2A223J	CHIP R 22K J 1/10W	
R485			RK73FB2A822J	CHIP R 8.2K J 1/10W	
R486			RK73FB2A560J	CHIP R 56 J 1/10W	
R487-489			RK73FB2A223J	CHIP R 22K J 1/10W	
R490			RK73FB2A681J	CHIP R 680 J 1/10W	
R491,492			RK73FB2A471J	CHIP R 470 J 1/10W	
R501			RK73FB2A101J	CHIP R 100 J 1/10W	
R502			RK73FB2A331J	CHIP R 330 J 1/10W	
R503			RK73FB2A681J	CHIP R 680 J 1/10W	
R504			RK73FB2A331J	CHIP R 330 J 1/10W	
R505,506			RK73FB2A6R8J	CHIP R 6.8 J 1/10W	
R507			RK73FB2A681J	CHIP R 680 J 1/10W	
R508,509			R92-0696-05	CHIP R 33 J 1/4W	
R510			RK73FB2A331J	CHIP R 330 J 1/10W	

Ref. No.	Address	New parts	Parts No.	Description	Destination
R511			RK73FB2A151J	CHIP R 150 J 1/10W	
R512,513			R92-1318-05	CHIP R 100 J 1W	
R514-517			RS14DB3A5R6J	FL-PROOF RS 5.6 J 1W	
R518,519			RS14DB3A150J	FL-PROOF RS 15 J 1W	
R520			RK73FB2A561J	CHIP R 560 J 1/10W	
R521,522			RS14DB3A5R6J	FL-PROOF RS 5.6 J 1W	
R530		*	R92-2543-05	FIXED RESISTOR 6.8 1/2W	
R601			RK73FB2A472J	CHIP R 4.7K J 1/10W	
R701			RK73FB2A103J	CHIP R 10K J 1/10W	
R702			RK73FB2A101J	CHIP R 100 J 1/10W	
R703-705			RK73FB2A562J	CHIP R 5.6K J 1/10W	
R706			RK73FB2A472J	CHIP R 4.7K J 1/10W	
R707			RK73FB2A821J	CHIP R 820 J 1/10W	
R708			RK73FB2A272J	CHIP R 2.7K J 1/10W	
R709			RK73FB2A333J	CHIP R 33K J 1/10W	
R710			R92-1282-05	CHIP R 10 J 1W	
R712			R92-1316-05	CHIP R 39 J 1W	
R713			RK73FB2A471J	CHIP R 470 J 1/10W	
R714			RK73FB2A153J	CHIP R 15K J 1/10W	
VR1			R12-6730-05	TRIMMING POT. 220	
VR501,502			R12-6734-05	TRIMMING POT. 1K	
W301			R92-0150-05	JUMPER REST 0 OHM (ANT1)	
W303			R92-0150-05	JUMPER REST 0 OHM (ANT2)	
K1-14			S51-1420-05	RELAY	
K301			S51-2417-05	RELAY	
K302			S51-1429-05	RELAY	
K601			S51-2423-05	RELAY	
D1,2			1SS101	DIODE	
D3			RLZJ5.1B	ZENER DIODE	
D4-10			LFB01	DIODE	
D11			DAP202K	DIODE	
D301,302			DSA301LA	DIODE	
D303,304			LFB01	DIODE	
D401			1SS226	DIODE	
D402		*	RD9.1M(B2)	ZENER DIODE	
D450			DAN235K	DIODE	
D451-456			1SV128	DIODE	
D457			DAN235K	DIODE	
D501			MA27T-B	DIODE	
D502,503			SV03YS	DIODE	
D504			SG-5L(R)	DIODE	
D601			LFB01	DIODE	
D701			DAN202K	DIODE	
D702			LFB01	DIODE	
IC1			TC9174F	IC (CMOS I/O EXTENSION)	
IC402			UPC7805H	IC (VOLTAGE REGULATOR/ +5V)	
IC601,602			UPC7808H	IC (VOLTAGE REGULATOR/ +8V)	
IC701			NJM2904M	IC (OP AMP X2)	
Q1-4			FMA7	TRANSISTOR	
Q5			DTC114EK	DIGITAL TRANSISTOR	
Q6			FMC2	TRANSISTOR	
Q10-16			DTB143EK	DIGITAL TRANSISTOR	
Q401			2SA1162(Y)	TRANSISTOR	
Q402,403			2SC2712(Y)	TRANSISTOR	
Q404			2SD1624(S)	TRANSISTOR	
Q405			2SD1406(Y)	TRANSISTOR	
Q460,461			3SK131(M)	FET	
Q470,471			3SK131(M)	FET	

PARTS LIST

FINAL UNIT (X45-351X-XX)
AT UNIT (X53-3340-02)

Ref. No.	Address	New parts	Parts No.	Description	Destination
Q472			2SC2712(Y)	TRANSISTOR	
Q475			3SK131(M)	FET	
Q501			2SC1971	TRANSISTOR	
Q502,503			2SC3133	TRANSISTOR	
Q504			2SD1406(Y)	TRANSISTOR	
Q505,506			2SC2879	TRANSISTOR	
Q507			2SD1406(Y)	TRANSISTOR	
Q601			DTC143TK	DIGITAL TRANSISTOR	
Q701			DTC114TK	DIGITAL TRANSISTOR	
Q702,703			DTD114EK	DIGITAL TRANSISTOR	
TH452			157-502-53002	THERMISTOR 5K	
TH701			5TP-41S	THERMISTOR	
AT UNIT (X53-3340-02)					
C1			CC45FSL2H330J	CERAMIC 33PF J	
C2-8			CK73FB1E103K	CHIP C 0.010UF K	
C9,10			CK73FB1H102K	CHIP C 1000PF K	
C11			CK73FB1E103K	CHIP C 0.010UF K	
C12			CE04EW1C470M	ELECTRO 47UF 16WV	
C13-15			CK73FB1E103K	CHIP C 0.010UF K	
C16			CK73EF1E474Z	CHIP C 0.47UF Z	
C17-19			CK73FB1E103K	CHIP C 0.010UF K	
C20			CE04EW1C101M	ELECTRO 100UF 16WV	
C21-23			CK73FB1E103K	CHIP C 0.010UF K	
C24			CK73EF1E474Z	CHIP C 0.47UF Z	
C25			CK73FB1E103K	CHIP C 0.010UF K	
C26			CE04EW1C101M	ELECTRO 100UF 16WV	
C27-37			CK73FB1E103K	CHIP C 0.010UF K	
C38			CK73FB1H103K	CHIP C 0.010UF K	
C101-103			CK73FB1H103K	CHIP C 0.010UF K	
C105-108			CK73FB1H103K	CHIP C 0.010UF K	
TC1			C05-0031-15	TRIMMER CAPACITOR 10PF	
VC1,2	2L		C02-0023-05	VARIABLE CAPACITOR 300PF	
A5	3L		D40-0633-15	GEAR ASSY	
CN1,2			E04-0157-05	RF COAXIAL CABLE SOCKET	
CN3			E40-3239-05	PIN CONNECTOR (4P)	
CN4			E40-3240-05	PIN CONNECTOR (5P)	
CN5			E40-3238-05	PIN CONNECTOR (3P)	
CN6			E40-3237-05	PIN CONNECTOR (2P)	
CN7			E40-5068-05	PIN CONNECTOR (11P)	
CN101			E40-5066-05	PIN CONNECTOR (9P)	
–			F20-1081-04	INSULATING SHEET	
A1	2M		F11-1142-22	SHIELDING CASE	
A2	2M		F10-1401-23	SHIELDING PLATE	
A3	1M		F11-1143-14	SHIELDING COVER	
A4	2M		F11-1144-14	SHIELDING COVER	
A6	1M	*	F10-2192-04	SHIELDING COVER	
–			J61-0307-05	BAND	
L1			L39-0496-05	COIL	
L2			L39-0415-25	COIL	
L3-6			L40-1011-13	SMALL FIXED INDUCTOR	
L7-11			L40-1011-14	SMALL FIXED INDUCTOR	
L12-14			L40-1011-13	SMALL FIXED INDUCTOR	
L101-103			L40-1011-14	SMALL FIXED INDUCTOR	
L105-108			L40-1011-14	SMALL FIXED INDUCTOR	
L109			L34-1276-15	COIL	
L110			L39-0479-05	COIL	
L111			L39-0495-05	COIL	
L112			L39-0494-15	COIL	
T110-112			L92-0117-05	TROIDAL CORE	
K	1M,2M		N87-3006-46	BRAZIER HEAD TAPTITE SCREW	
S	1M,2M		N88-3006-46	FLAT HEAD TAPTITE SCREW	
R1,2			RD14BB2E101J	RD 100 J 1/4W	
R3			RK73FB2A102J	CHIP R 1.0K J 1/10W	
R4			RD14BB2E560J	RD 56 J 1/4W	
R5,6			RK73FB2A181J	CHIP R 180 J 1/10W	
R7-10			RK73FB2A103J	CHIP R 10K J 1/10W	
R11			RK73FB2A563J	CHIP R 56K J 1/10W	
R12			RK73FB2A121J	CHIP R 120 J 1/10W	
R13			RK73FB2A101J	CHIP R 100 J 1/10W	
R14			RK73FB2A563J	CHIP R 56K J 1/10W	
R15			RK73FB2A121J	CHIP R 120 J 1/10W	
R16			RK73FB2A101J	CHIP R 100 J 1/10W	
R17			RK73FB2A330J	CHIP R 33 J 1/10W	
R18			RK73FB2A103J	CHIP R 10K J 1/10W	
R19			RK73FB2A330J	CHIP R 33 J 1/10W	
R20-23			RK73FB2A103J	CHIP R 10K J 1/10W	
R24,25			RD14BB2E100J	RD 10 J 1/4W	
R26-30			RK73FB2A103J	CHIP R 10K J 1/10W	
R31			RK73FB2A472J	CHIP R 4.7K J 1/10W	
R32			RK73FB2A103J	CHIP R 10K J 1/10W	
R33			RD14BB2E101J	RD 100 J 1/4W	
R34			RK73FB2A472J	CHIP R 4.7K J 1/10W	
VR101,102	3L		R01-3435-05	POTENTIOMETER 10K	
W12-17			R92-0679-05	CHIP R 0 OHM	
W18-28			R92-0670-05	CHIP R 0 OHM	
W29-31			R92-0679-05	CHIP R 0 OHM	
W32			R92-0670-05	CHIP R 0 OHM	
W34			R92-0670-05	CHIP R 0 OHM	
W35,36			R92-0679-05	CHIP R 0 OHM	
W37			R92-0670-05	CHIP R 0 OHM	
W40	2B	*	E33-1984-05	PROCESSED WIRE KIT (to FIL:CN4)	
W40	2B	*	E33-1984-05	PROCESSED WIRE KIT (to CONT:CN4)	
W40	2B	*	E33-1984-05	PROCESSED WIRE KIT (to RL:AT1)	
W40	2B	*	E33-1984-05	PROCESSED WIRE KIT (to RL:AT2)	
K1			S51-2407-05	RELAY	
K101-103			S76-0401-05	RELAY	
K105-108			S76-0401-05	RELAY	
M1,2	3L		T42-0453-05	DC MOTOR	
D1,2			1SS101	DIODE	
D3-8			1SS226	DIODE	
D10			1S1555	DIODE	
D101-103			1S1555	DIODE	
D105-108			1S1555	DIODE	
D109,110			RLS73	DIODE	
IC1			SN74S74N	IC (ONE SHOT MULTI)	
IC2,3			TC4066BP	IC (ANALOG/ DIGITAL SW)	
IC4,5			BA6109U2	IC (MOTOR DRIVER)	
IC6			NJM2903S	IC (DUAL COMPALATOR)	
IC7			MC78L05M	IC (VOLTAGE REGULATOR/ +5V)	

PARTS LSIT

AT UNIT (X53-3340-02)
CONTROL UNIT (X53-356X-XX)

Ref. No.	Address	New parts	Parts No.	Description			Destination
Q1,2			2SC2714(Y)	TRANSISTOR			
Q3			DTC114EK	DIGITAL TRANSISTOR			
Q4			2SA1204(Y)	TRANSISTOR			
Q5			DTC114EK	DIGITAL TRANSISTOR			
CONTROL UNIT (X53-356X-XX) 0-11 : K,P 0-21 : M 0-22 : M2 0-71 : X 2-71 : E 2-72 : E2 2-73 : E3 2-74 : E9							
C1,2			CK73GB1H102K	CHIP C	1000PF	K	
C3			C92-0044-05	CHIP-ELE	47UF	10WV	
C4			CK73GB1H102K	CHIP C	1000PF	K	
C5			C92-0032-05	CHIP-ELE	4.7UF	25WV	
C6,7			CK73GF1E104Z	CHIP C	0.10UF	Z	
C8			C92-0037-05	CHIP-ELE	10UF	16WV	
C9			C92-0032-05	CHIP-ELE	4.7UF	25WV	
C10,11			CK73GF1E104Z	CHIP C	0.10UF	Z	
C12			C92-0037-05	CHIP-ELE	10UF	16WV	
C13			C92-0032-05	CHIP-ELE	4.7UF	25WV	
C14,15			CK73GF1E104Z	CHIP C	0.10UF	Z	
C16			C92-0037-05	CHIP-ELE	10UF	16WV	
C17-41			CK73GB1H102K	CHIP C	1000PF	K	
C42			CK73GB1H103K	CHIP C	0.010UF	K	
C43,44			CK73GB1H102K	CHIP C	1000PF	K	
C45			C92-0044-05	CHIP-ELE	47UF	10WV	
C46,47			CK73GB1H103K	CHIP C	0.010UF	K	
C48,49			CC73GCH1H330J	CHIP C	33PF	J	
C50-54			CK73GB1H103K	CHIP C	0.010UF	K	
C55			C92-0044-05	CHIP-ELE	47UF	10WV	
C56,57			CK73GF1E104Z	CHIP C	0.10UF	Z	
C58			CK73GB1H103K	CHIP C	0.010UF	K	
C59			C92-0044-05	CHIP-ELE	47UF	10WV	
C60			CK73GB1H103K	CHIP C	0.010UF	K	
C61			C92-0044-05	CHIP-ELE	47UF	10WV	
C62-77			CC73GCH1H101J	CHIP C	100PF	J	
C78-80			CK73GB1H103K	CHIP C	0.010UF	K	
C81-88			CC73GCH1H101J	CHIP C	100PF	J	
C89-93			CK73GB1H103K	CHIP C	0.010UF	K	
C94-96			C92-0037-05	CHIP-ELE	10UF	16WV	
C97			C92-0044-05	CHIP-ELE	47UF	10WV	
C98-102			CK73GB1H103K	CHIP C	0.010UF	K	
C103,104			CC73GCH1H220J	CHIP C	22PF	J	
C105-107			CK73GB1H103K	CHIP C	0.010UF	K	
C108			C92-0044-05	CHIP-ELE	47UF	10WV	
C109,110			CK73GB1H103K	CHIP C	0.010UF	K	
C111-113			C92-0023-05	CHIP-ELE	1.0UF	50WV	
C114			CK73GB1H103K	CHIP C	0.010UF	K	
C115			C92-0023-05	CHIP-ELE	1.0UF	50WV	
C116,117			CK73GB1H103K	CHIP C	0.010UF	K	
C118-124			CK73GB1H102K	CHIP C	1000PF	K	
C125,126			CK73GB1H103K	CHIP C	0.010UF	K	
C127-141			CC73GCH1H101J	CHIP C	100PF	J	
C142-147			CK73GB1H102K	CHIP C	1000PF	K	
C148-150			CC73GCH1H101J	CHIP C	100PF	J	
C152			CC73GCH1H101J	CHIP C	100PF	J	
C153-175			CK73GB1H102K	CHIP C	1000PF	K	
C177-183			CK73GB1H102K	CHIP C	1000PF	K	
C184-187			CK73GB1H103K	CHIP C	0.010UF	K	
C188-223			CK73GB1H102K	CHIP C	1000PF	K	
C224,225			CC73GSL1H471J	CHIP C	470PF	J	

Ref. No.	Address	New parts	Parts No.	Description				Destination
C226,227			CK73GB1H103K	CHIP C	0.010UF	K		
C228,229			CK73GB1H102K	CHIP C	1000PF	K		
C230			CK73GB1H103K	CHIP C	0.010UF	K		
C231-233			CK73GB1H102K	CHIP C	1000PF	K		
C501-509			CK73GB1H103K	CHIP C	0.010UF	K		
C511-521			CK73GB1H103K	CHIP C	0.010UF	K		
C522			CK73GB1H102K	CHIP C	1000PF	K		
C523			CK73GF1E104Z	CHIP C	0.10UF	Z		
C601-604			CK73GB1H103K	CHIP C	0.010UF	K		
C605			CK73GF1E104Z	CHIP C	0.10UF	Z		
C606			CK73GB1H102K	CHIP C	1000PF	K		
401	1D		E23-0623-04	EARTH LUG				
CN1,2		*	E40-5744-05	FLAT CABLE CONNECTOR (20P)				
CN3			E40-3239-05	PIN CONNECTOR (4P)				
CN4		*	E40-5763-05	PIN CONNECTOR (12P)				
CN5		*	E40-5744-05	FLAT CABLE CONNECTOR (20P)				
CN6			E40-5761-05	FLAT CABLE CONNECTOR (26P)				
CN7		*	E40-5742-05	FLAT CABLE CONNECTOR (13P)				
CN8		*	E40-5739-05	FLAT CABLE CONNECTOR (10P)				
CN9,10		*	E40-5740-05	FLAT CABLE CONNECTOR (20P)				
CN11		*	E40-5744-05	FLAT CABLE CONNECTOR (20P)				
CN12			E02-2015-05	SOCKET FOR IC				
CN501		*	E40-5740-05	FLAT CABLE CONNECTOR (20P)				
CN601			E40-3251-05	PIN CONNECTOR (7P)				
J601			E06-0858-15	CYLINDRICAL RECEPTACLE (8P MIC)				
A1	3G	*	F01-1007-04	HEAT SINK				
402	3G		G02-0574-04	FLAT SPRING				
403	2A	*	J19-1570-05	HOLDER (BATT)				
L1-3			L40-4705-48	SMALL FIXED INDUCTOR (47UH)				
L4,5			L40-1292-18	SMALL FIXED INDUCTOR				
L6,7			L40-4705-48	SMALL FIXED INDUCTOR (47UH)				
L8			L40-1292-18	SMALL FIXED INDUCTOR				
L11-25			L40-4705-48	SMALL FIXED INDUCTOR (47UH)				
L26,27			L40-1005-48	SMALL FIXED INDUCTOR (10UH)				
L28			L40-4705-48	SMALL FIXED INDUCTOR (47UH)				
X1		*	L77-1589-05	CRYSTAL RESONATOR (11.0592MHZ)				
X2			L78-0325-05	RESONATOR (2.0MHZ)				
G	3G		N32-2606-46	FLAT HEAD MACHIN SCREW				
R1,2			RK73GB1J101J	CHIP R	100	J	1/16W	
R3,4			RK73GB1J102J	CHIP R	1.0K	J	1/16W	
R5			RK73GB1J101J	CHIP R	100	J	1/16W	
R6			RK73GB1J473J	CHIP R	47K	J	1/16W	
R7-9			RK73GB1J102J	CHIP R	1.0K	J	1/16W	
R10-28			RK73GB1J101J	CHIP R	100	J	1/16W	
R29			RK73GB1J105J	CHIP R	1.0M	J	1/16W	
R30-37			RK73GB1J101J	CHIP R	100	J	1/16W	
R39			RK73GB1J102J	CHIP R	1.0K	J	1/16W	
R40			RK73GB1J471J	CHIP R	470	J	1/16W	
R41			RK73GB1J103J	CHIP R	10K	J	1/16W	
R42			RK73GB1J222J	CHIP R	2.2K	J	1/16W	
R43,44			RK73GB1J104J	CHIP R	100K	J	1/16W	
R45			RK73GB1J472J	CHIP R	4.7K	J	1/16W	
R46			RK73GB1J102J	CHIP R	1.0K	J	1/16W	
R47			RK73GB1J473J	CHIP R	47K	J	1/16W	
R48			RK73GB1J102J	CHIP R	1.0K	J	1/16W	X

PARTS LIST

CONTROL UNIT (X53-356X-XX)

Ref. No.	Address	New parts	Parts No.	Description			Destination
R49			RK73GB1J473J	CHIP R	47K	J 1/16W	
R51			RK73GB1J473J	CHIP R	47K	J 1/16W	
R52			RK73GB1J103J	CHIP R	10K	J 1/16W	
R53			RK73GB1J102J	CHIP R	1.0K	J 1/16W	E3E9M
R54			RK73GB1J473J	CHIP R	47K	J 1/16W	
R55,56			RK73GB1J103J	CHIP R	10K	J 1/16W	
R57			RK73GB1J102J	CHIP R	1.0K	J 1/16W	EE2E3E9
R58			RK73GB1J473J	CHIP R	47K	J 1/16W	
R59-68			RK73GB1J103J	CHIP R	10K	J 1/16W	
R69			RK73GB1J102J	CHIP R	1.0K	J 1/16W	E2MM2
R70			RK73GB1J473J	CHIP R	47K	J 1/16W	
R71,72			RK73GB1J103J	CHIP R	10K	J 1/16W	
R73			RK73GB1J102J	CHIP R	1.0K	J 1/16W	E
R74			RK73GB1J473J	CHIP R	47K	J 1/16W	
R75-85			RK73GB1J103J	CHIP R	10K	J 1/16W	
R86,87			RK73GB1J472J	CHIP R	4.7K	J 1/16W	
R88			RK73GB1J153J	CHIP R	15K	J 1/16W	
R89			RK73GB1J334J	CHIP R	330K	J 1/16W	
R90-92			RK73GB1J153J	CHIP R	15K	J 1/16W	
R93			RK73GB1J103J	CHIP R	10K	J 1/16W	
R94,95			RK73GB1J153J	CHIP R	15K	J 1/16W	
R96			RK73GB1J105J	CHIP R	1.0M	J 1/16W	
R97			RK73GB1J102J	CHIP R	1.0K	J 1/16W	
R98			RK73GB1J473J	CHIP R	47K	J 1/16W	
R99			RK73GB1J102J	CHIP R	1.0K	J 1/16W	
R100-105			RK73GB1J105J	CHIP R	1.0M	J 1/16W	
R107			RK73GB1J105J	CHIP R	1.0M	J 1/16W	
R108-119			RK73GB1J104J	CHIP R	100K	J 1/16W	
R120-130			RK73GB1J101J	CHIP R	100	J 1/16W	
R131			RK73GB1J102J	CHIP R	1.0K	J 1/16W	
R132,133			RK73GB1J103J	CHIP R	10K	J 1/16W	
R134-137			RK73GB1J101J	CHIP R	100	J 1/16W	
R138-140			RK73GB1J101J	CHIP R	100	J 1/16W	
R141-144			RK73GB1J102J	CHIP R	1.0K	J 1/16W	
R145			RK73GB1J223J	CHIP R	22K	J 1/16W	
R146,147			RK73GB1J473J	CHIP R	47K	J 1/16W	
R148-150			RK73GB1J101J	CHIP R	100	J 1/16W	
R152-169			RK73GB1J101J	CHIP R	100	J 1/16W	
R170			RK73GB1J474J	CHIP R	470K	J 1/16W	
R171			RK73GB1J102J	CHIP R	1.0K	J 1/16W	
R172-177			RK73GB1J101J	CHIP R	100	J 1/16W	
R179-201			RK73GB1J101J	CHIP R	100	J 1/16W	
R202			RK73GB1J473J	CHIP R	47K	J 1/16W	
R203-214			RK73GB1J101J	CHIP R	100	J 1/16W	
R215			RK73GB1J473J	CHIP R	47K	J 1/16W	
R216-222			RK73GB1J101J	CHIP R	100	J 1/16W	
R223			RK73GB1J333J	CHIP R	33K	J 1/16W	
R224			RK73GB1J101J	CHIP R	100	J 1/16W	
R225			RK73GB1J473J	CHIP R	47K	J 1/16W	
R226			RK73GB1J104J	CHIP R	100K	J 1/16W	
R227-234			RK73GB1J103J	CHIP R	10K	J 1/16W	
R235-237			RK73GB1J102J	CHIP R	1.0K	J 1/16W	
R238-240			RK73GB1J101J	CHIP R	100	J 1/16W	
R241			RK73GB1J473J	CHIP R	47K	J 1/16W	
R242,243			RK73GB1J102J	CHIP R	1.0K	J 1/16W	
R244			RK73GB1J101J	CHIP R	100	J 1/16W	KPMXE
R244			RK73GB1J101J	CHIP R	100	J 1/16W	E2E3E9
R245			RK73GB1J473J	CHIP R	47K	J 1/16W	
R501-504			RK73GB1J473J	CHIP R	47K	J 1/16W	

Ref. No.	Address	New parts	Parts No.	Description			Destination
R505			RK73GB1J391J	CHIP R	390	J 1/16W	
R506			RK73GB1J271J	CHIP R	270	J 1/16W	
R507			RK73GB1J473J	CHIP R	47K	J 1/16W	
R508			RK73GB1J391J	CHIP R	390	J 1/16W	
R509			RK73GB1J271J	CHIP R	270	J 1/16W	
R510			RK73GB1J391J	CHIP R	390	J 1/16W	
R511			RK73GB1J271J	CHIP R	270	J 1/16W	
R512			RK73GB1J391J	CHIP R	390	J 1/16W	
R513			RK73GB1J271J	CHIP R	270	J 1/16W	
R514			RK73GB1J473J	CHIP R	47K	J 1/16W	
R515			RK73GB1J391J	CHIP R	390	J 1/16W	
R516			RK73GB1J271J	CHIP R	270	J 1/16W	
R517			RK73GB1J391J	CHIP R	390	J 1/16W	
R518			RK73GB1J271J	CHIP R	270	J 1/16W	
R519			RK73GB1J391J	CHIP R	390	J 1/16W	
R520			RK73GB1J271J	CHIP R	270	J 1/16W	
R521-523			RK73GB1J473J	CHIP R	47K	J 1/16W	
R524			RK73GB1J102J	CHIP R	1.0K	J 1/16W	
R525			RK73GB1J473J	CHIP R	47K	J 1/16W	
R526-527			RK73GB1J101J	CHIP R	100	J 1/16W	
R528			RK73GB1J391J	CHIP R	390	J 1/16W	
R529			RK73GB1J271J	CHIP R	270	J 1/16W	
R530			RK73GB1J391J	CHIP R	390	J 1/16W	
R531			RK73GB1J271J	CHIP R	270	J 1/16W	
R532			RK73GB1J391J	CHIP R	390	J 1/16W	
R533			RK73GB1J271J	CHIP R	270	J 1/16W	
R534			RK73GB1J391J	CHIP R	390	J 1/16W	
R535			RK73GB1J271J	CHIP R	270	J 1/16W	
R536-539			RK73GB1J101J	CHIP R	100	J 1/16W	
R540			RK73GB1J473J	CHIP R	47K	J 1/16W	
R541,542			RK73GB1J101J	CHIP R	100	J 1/16W	
R543-546			RK73GB1J473J	CHIP R	47K	J 1/16W	
R547,548			RK73GB1J103J	CHIP R	10K	J 1/16W	
R549-555			RK73GB1J473J	CHIP R	47K	J 1/16W	
R556			RK73GB1J103J	CHIP R	10K	J 1/16W	
S1			S62-0412-05	SLIDE SWITCH			
S501-545		*	S70-0439-05	TACT SWITCH			
S546-551		*	S70-0439-05	TACT SWITCH			
D1-3			1SS355	DIODE			
D4		*	RD7.5M(B3)	ZENER DIODE			
D5-12			1SS355	DIODE			
D501			B30-2036-05	LED (RED)			
D502		*	B30-2146-05	LED (ORANGE)			
D510-519		*	B30-2146-05	LED (ORANGE)			
IC1,2			UPC7805H	IC (VOLTAGE REGULATOR/ +5V)			
IC3			TA78L08F	IC (VOLTAGE REGULATOR)			
IC4			AT2402N10SI2.7	IC (2kbit SERIAL EEPROMM)			
IC5			MB3780A	IC (BATTERY BACKUP)			
IC6		*	M37702S4BFP	IC			
IC7			TC7S04F	IC (2CH NAND GATE)			
IC8			LC3564QMF-10	IC			
IC9			TC4052BF	IC (4CH MPX/DE-MPX)			
IC10			TC7S04F	IC (2CH NAND GATE)			
IC11		*	TC74VHC32F	IC			
IC12		*	27C512RJLVC	IC			
IC13			TC4052BF	IC (4CH MPX/DE-MPX)			
IC14		*	TC74VHC08F	IC			
IC15		*	TC74VHC245F	IC			

PARTS LSIT

CONTROL UNIT (X53-356X-XX)
TX-RX UNIT (X57-4620-00)

Ref. No.	Address	New parts	Parts No.	Description	Destination
IC16			CXD1095Q	IC (I/O EXPANDER)	
IC17,18		*	TC74VHC138F	IC	
IC19		*	TC74VHC573F	IC	
IC20,21			LZ92K371	IC (ENCODER PROCESSOR)	
IC22,23			CXD1095Q	IC (I/O EXPANDER)	
IC24		*	68HC05G2419553	IC	
IC25,26			TC4584BF	IC (BUFF)	
IC27		*	ADM232LAR	IC	
IC28			NJM2904M	IC (OP AMP X2)	
IC29			TC7S32F	IC (2CH NAND GATE)	
IC501-504			UPD6345GS	IC	
Q1			DTA143EK	DIGITAL TRANSISTOR	
Q2			DTC143EK	DIGITAL TRANSISTOR	
Q3,4			DTC114EK	DIGITAL TRANSISTOR	
Q5			DTC143EK	DIGITAL TRANSISTOR	
Q6-11			DTC114EK	DIGITAL TRANSISTOR	
Q12,13			DTA143EK	DIGITAL TRANSISTOR	
Q14-22			DTC143EK	DIGITAL TRANSISTOR	
Q23,24			DTA143EK	DIGITAL TRANSISTOR	
Q27,28			DTC114EK	DIGITAL TRANSISTOR	
Q29-31			DTC143TK	DIGITAL TRANSISTOR	
Q33			DTC143EK	DIGITAL TRANSISTOR	
Q501,502			DTC114EK	DIGITAL TRANSISTOR	

TX-RX UNIT (X57-4620-00)

C1			C90-2045-05	ELECTRO	2.2UF	25WV	
C2,3			CK73FF1E104Z	CHIP C	0.10UF	Z	
C4,5			CC73FCH1H330J	CHIP C	33PF	J	
C6			C90-2045-05	ELECTRO	2.2UF	25WV	
C7,8			CK73FF1E104Z	CHIP C	0.10UF	Z	
C9-14			CC73FCH1H330J	CHIP C	33PF	J	
C15			CC73FSL1H152J	CHIP C	1500PF	J	
C16			CC73FCH1H101J	CHIP C	100PF	J	
C17			CC73FSL1H152J	CHIP C	1500PF	J	
C18			CC73FCH1H101J	CHIP C	100PF	J	
C19-22			CK73FF1E104Z	CHIP C	0.10UF	Z	
C23			C90-2045-05	ELECTRO	2.2UF	25WV	
C24			CK73FB1H223K	CHIP C	0.022UF	K	
C25			CK73FF1E104Z	CHIP C	0.10UF	Z	
C26,27			CK73FB1H223K	CHIP C	0.022UF	K	
C28			C90-2045-05	ELECTRO	2.2UF	25WV	
C29			CK73FF1E104Z	CHIP C	0.10UF	Z	
C30			CK73GB1H102K	CHIP C	1000PF	K	
C31			CK73FB1H471K	CHIP C	470PF	K	
C32			CK73FF1E104Z	CHIP C	0.10UF	Z	
C33			CK73GB1H102K	CHIP C	1000PF	K	
C34			C90-2045-05	ELECTRO	2.2UF	25WV	
C36			CC73GCH1H330J	CHIP C	33PF	J	
C37			CK73GB1H102K	CHIP C	1000PF	K	
C38			CK73GB1H103K	CHIP C	0.010UF	K	
C39,40			CK73FB1H102K	CHIP C	1000PF	K	
C41			C90-2045-05	ELECTRO	2.2UF	25WV	
C42			CK73FB1H103K	CHIP C	0.010UF	K	
C44			CK73GB1H102K	CHIP C	1000PF	K	
C45			CC73FCH1H121J	CHIP C	120PF	J	
C46			CK73GB1H102K	CHIP C	1000PF	K	
C50			CK73GB1H102K	CHIP C	1000PF	K	

Ref. No.	Address	New parts	Parts No.	Description			Destination
C52			CE04EW1C470M	ELECTRO	47UF	16WV	
C53			CK73GB1E223K	CHIP C	0.022UF	K	
C54			CQ92M1H154K	MYLAR	0.15UF	K	
C55			CK73FB1H102K	CHIP C	1000PF	K	
C56			CE04EW1C101M	ELECTRO	100UF	16WV	
C57			CC73ECH1H202J	CHIP C	2000PF	J	
C58			CK73FB1H103K	CHIP C	0.010UF	K	
C59			CC73GCH1H680J	CHIP C	68PF	J	
C60			CC73GCH1H180J	CHIP C	18PF	J	
C61			CC73GCH1H060D	CHIP C	6.0PF	D	
C62			CC73GCH1H470J	CHIP C	47PF	J	
C63			CK73GB1H103K	CHIP C	0.010UF	K	
C64			CE04EW1C101M	ELECTRO	100UF	16WV	
C65,66			CK73GB1H102K	CHIP C	1000PF	K	
C67			CE04EW1C470M	ELECTRO	47UF	16WV	
C68,69			CK73GB1H102K	CHIP C	1000PF	K	
C100			CE04EW1C100M	ELECTRO	10UF	16WV	
C101			CK73FF1E104Z	CHIP C	0.10UF	Z	
C103			CE04EW1H010M	ELECTRO	1.0UF	50WV	
C104			CE04EW1C100M	ELECTRO	10UF	16WV	
C105			CK73GB1H102K	CHIP C	1000PF	K	
C106			CC73FCH1H102J	CHIP C	1000PF	J	
C107			CK73FF1E104Z	CHIP C	0.10UF	Z	
C108			CE04EW1C100M	ELECTRO	10UF	16WV	
C109			CK73FF1E104Z	CHIP C	0.10UF	Z	
C112			CC73FCH1H102J	CHIP C	1000PF	J	
C113,114			CQ92FM1H223K	MYLAR	0.022UF	K	
C116			CC73FCH1H102J	CHIP C	1000PF	J	
C118,119			CC73GCH1H271J	CHIP C	270PF	J	
C120			CE04EW1C100M	ELECTRO	10UF	16WV	
C121			CE04EW1H010M	ELECTRO	1.0UF	50WV	
C122			CC73FSL1H152J	CHIP C	1500PF	J	
C123			CC73GCH1H101J	CHIP C	100PF	J	
C124			CC73GCH1H221J	CHIP C	220PF	J	
C125			CK73GB1E223K	CHIP C	0.022UF	K	
C126			CE04EW1C100M	ELECTRO	10UF	16WV	
C127			CK73GB1H103K	CHIP C	0.010UF	K	
C128			CC73FSL1H221J	CHIP C	220PF	J	
C129			CC73FCH1H101J	CHIP C	100PF	J	
C130			CE04EW1C100M	ELECTRO	10UF	16WV	
C131			CK73FF1E104Z	CHIP C	0.10UF	Z	
C132			CE04EW1C100M	ELECTRO	10UF	16WV	
C133			CC73GCH1H101J	CHIP C	100PF	J	
C134			CK73GB1E223K	CHIP C	0.022UF	K	
C135			CE04EW1C100M	ELECTRO	10UF	16WV	
C136			CK73GB1E223K	CHIP C	0.022UF	K	
C137			CC73FCH1H102J	CHIP C	1000PF	J	
C138			CC73GCH1H221J	CHIP C	220PF	J	
C139			CC73GCH1H271J	CHIP C	270PF	J	
C140,141			CK73GB1E223K	CHIP C	0.022UF	K	
C142			CE04EW1C100M	ELECTRO	10UF	16WV	
C143			CK73GB1E223K	CHIP C	0.022UF	K	
C144		*	CQ92FM1H683K	MYLAR	0.068UF	K	
C145			CK73FB1E104K	CHIP C	0.10UF	K	
C146,147			CC73FCH1H102J	CHIP C	1000PF	J	
C150			CK73GB1E223K	CHIP C	0.022UF	K	
C151			CE04EW1C100M	ELECTRO	10UF	16WV	
C152			CC73FCH1H102J	CHIP C	1000PF	J	
C153			CC73GCH1H271J	CHIP C	270PF	J	

PARTS LIST

TX-RX UNIT (X57-4620-00)

Ref. No.	Address	New parts	Parts No.	Description			Destination
C154			CK73GB1E223K	CHIP C	0.022UF	K	
C155			CE04EW1C100M	ELECTRO	10UF	16WV	
C156			CK73FF1E104Z	CHIP C	0.10UF	Z	
C157			CK73GB1E223K	CHIP C	0.022UF	K	
C158			C90-2045-05	ELECTRO	2.2UF	25WV	
C159,160			CK73FF1E104Z	CHIP C	0.10UF	Z	
C161			CK73GB1E223K	CHIP C	0.022UF	K	
C162			CE04EW1C100M	ELECTRO	10UF	16WV	
C163			CK73FF1E104Z	CHIP C	0.10UF	Z	
C164			CE04EW1C100M	ELECTRO	10UF	16WV	
C165			CK73FF1E104Z	CHIP C	0.10UF	Z	
C166,167			CE04EW1C100M	ELECTRO	10UF	16WV	
C168,169			CK73FF1E104Z	CHIP C	0.10UF	Z	
C170			CK73GB1H103K	CHIP C	0.010UF	K	
C171-176			CE04EW1C100M	ELECTRO	10UF	16WV	
C177			CQ92M1H103K	MYLAR	0.010UF	K	
C178,179			CC73FSL1H152J	CHIP C	1500PF	J	
C180,181			CC73ECH1H202J	CHIP C	2000PF	J	
C182			CC73GCH1H331J	CHIP C	330PF	J	
C183-185			CC73FSL1H152J	CHIP C	1500PF	J	
C186			CE04EW1C100M	ELECTRO	10UF	16WV	
C187			CC73GCH1H331J	CHIP C	330PF	J	
C188			CK73GB1H562K	CHIP C	5600PF	K	
C189			CE04EW1C100M	ELECTRO	10UF	16WV	
C190			CC73GCH1H331J	CHIP C	330PF	J	
C191,192			CE04NW1C100M	ELECTRO	10UF	16WV	
C193			CK73GB1H103K	CHIP C	0.010UF	K	
C194			CE04NW1C100M	ELECTRO	10UF	16WV	
C195			CE04EW1H010M	ELECTRO	1.0UF	50WV	
C196,197			CE04NW1C100M	ELECTRO	10UF	16WV	
C198			CE04EW1C100M	ELECTRO	10UF	16WV	
C199,200			CE04NW1C220M	ELECTRO	22UF	16WV	
C201,202			CK73GF1E104Z	CHIP C	0.10UF	Z	
C203,204			CE04NW1E4R7M	ELECTRO	4.7UF	25WV	
C205			CE04EW1C100M	ELECTRO	10UF	16WV	
C206,207			CK73GF1E104Z	CHIP C	0.10UF	Z	
C208			CK73GB1E223K	CHIP C	0.022UF	K	
C209,210			CE04NW1C100M	ELECTRO	10UF	16WV	
C212,213			CE04NW1H010M	ELECTRO	1.0UF	50WV	
C214			CK73GB1H472K	CHIP C	4700PF	K	
C215,216			CE04EW1C100M	ELECTRO	10UF	16WV	
C218,219			CK73EF1E474Z	CHIP C	0.47UF	Z	
C221,222			CK73FB1H102K	CHIP C	1000PF	K	
C223			CE04EW1C471M	ELECTRO	470UF	16WV	
C224			CE04EW1C100M	ELECTRO	10UF	16WV	
C225			CE04EW1C470M	ELECTRO	47UF	16WV	
C226			CE04EW1C101M	ELECTRO	100UF	16WV	
C227			CE04EW1C100M	ELECTRO	10UF	16WV	
C228			CE04EW1C101M	ELECTRO	100UF	16WV	
C229			CE04EW1C100M	ELECTRO	10UF	16WV	
C230			CE04EW1C471M	ELECTRO	470UF	16WV	
C231,232			CK73EF1E474Z	CHIP C	0.47UF	Z	
C233			CQ92M1H154K	MYLAR	0.15UF	K	
C235,236			CK73FB1H102K	CHIP C	1000PF	K	
C237			CE04EW1E471M	ELECTRO	470UF	25WV	
C240			CC73FSL1H152J	CHIP C	1500PF	J	
C241			CE04EW1H010M	ELECTRO	1.0UF	50WV	
C300,301			CC73FCH1H101J	CHIP C	100PF	J	
C302			CC73GCH1H101J	CHIP C	100PF	J	

Ref. No.	Address	New parts	Parts No.	Description			Destination
C303,304			CC73FCH1H101J	CHIP C	100PF	J	
C305			CC73GCH1H101J	CHIP C	100PF	J	
C306,307			CC73FCH1H101J	CHIP C	100PF	J	
C308			CC73GCH1H101J	CHIP C	100PF	J	
C309,310			CC73FCH1H101J	CHIP C	100PF	J	
C312,313			CC73FCH1H101J	CHIP C	100PF	J	
C314			CC73GCH1H101J	CHIP C	100PF	J	
C315			CC73FCH1H101J	CHIP C	100PF	J	
C316-320			CK73FB1H102K	CHIP C	1000PF	K	
C321			CC73FSL1H471J	CHIP C	470PF	J	
C326,327			CK73GB1H102K	CHIP C	1000PF	K	
C330-333			CK73FB1H102K	CHIP C	1000PF	K	
C334			CK73GB1E223K	CHIP C	0.022UF	K	
C335			CC73GCH1H331J	CHIP C	330PF	J	
C336-340			CK73GB1E223K	CHIP C	0.022UF	K	
C341			CK73FF1E104Z	CHIP C	0.10UF	Z	
C342			CC73FSL1H152J	CHIP C	1500PF	J	
C343			CK73FB1H562K	CHIP C	5600PF	K	
C344			CK73GB1H472K	CHIP C	4700PF	K	
C345			CK73GB1E223K	CHIP C	0.022UF	K	
C346-348			CC73FCH1H101J	CHIP C	100PF	J	
C349,350			CK73FF1E104Z	CHIP C	0.10UF	Z	
C351			CK73GB1E223K	CHIP C	0.022UF	K	
C355			CE04NW1C100M	ELECTRO	10UF	16WV	
C356			CE04EW1HR47M	ELECTRO	0.47UF	50WV	
C357			CE04EW1C100M	ELECTRO	10UF	16WV	
C358-361			CK73FB1H103K	CHIP C	0.010UF	K	
C363			CK73GB1H103K	CHIP C	0.010UF	K	
C364			C90-2045-05	ELECTRO	2.2UF	25WV	
C365-375			CK73FB1H471K	CHIP C	470PF	K	
C376			CK73GB1E223K	CHIP C	0.022UF	K	
C377-379			CK73FB1H471K	CHIP C	470PF	K	
C381,382			CK73FB1H103K	CHIP C	0.010UF	K	
C383			CK73GB1H102K	CHIP C	1000PF	K	
C384			CK73FB1H102K	CHIP C	1000PF	K	
C385			CK73GB1H103K	CHIP C	0.010UF	K	
C386			CK73FB1H103K	CHIP C	0.010UF	K	
C387			CK73GB1H103K	CHIP C	0.010UF	K	
C388			CK73FB1H471K	CHIP C	470PF	K	
C389,390			CK73GB1H471K	CHIP C	470PF	K	
C391-394			CK73FB1H103K	CHIP C	0.010UF	K	
C395			CK73GB1H103K	CHIP C	0.010UF	K	
C400			CC73FSL1H471J	CHIP C	470PF	J	
C401			CK73FB1H103K	CHIP C	0.010UF	K	
C402			C90-2167-05	ELECTRO	100UF	16WV	
CN1			E40-3239-05	PIN CONNECTOR (4P)			
CN3			E40-3239-05	PIN CONNECTOR (4P)			
CN4			E40-3242-05	PIN CONNECTOR (7P)			
CN5		*	E40-5747-05	PIN CONNECTOR (11P)			
CN6			E40-3243-05	PIN CONNECTOR (8P)			
CN7			E40-5736-05	FLAT CABLE CONNECTOR (26P)			
CN8		*	E40-5740-05	FLAT CABLE CONNECTOR (20P)			
CN9			E40-3240-05	PIN CONNECTOR (5P)			
CN10			E40-3238-05	PIN CONNECTOR (3P)			
CN11		*	E40-5741-05	FLAT CABLE CONNECTOR (8P)			
CN12			E40-3237-05	PIN CONNECTOR (2P)			
CN13			E04-0191-05	RF COAXIAL CABLE SOCKET			
CN14-16			E02-2015-05	SOCKET FOR IC			
CN17			E40-5067-05	PIN CONNECTOR (10P)			

PARTS LSIT

TX-RX UNIT (X57-4620-00)

Ref. No.	Address	New parts	Parts No.	Description	Destination
J1			E11-0455-05	PHONE JACK (3.5D)	
J2			E11-0431-05	PHONE JACK	
J4			E63-0401-05	PHONO JACK	
J5			E06-1352-05	DIN SOCKET	
J6			E11-0455-05	PHONE JACK (3.5D)	
J7		*	E58-0428-05	SUB PLUG (D) 9P	
W1		*	E37-0536-05	LEAD WIRE WITH MINIPIN PLUG	
A1	4G	*	F01-1005-04	HEAT SINK	
A2	4F		F11-1127-04	SHIELDING CASE	
A3,4	4G		G02-0574-04	FLAT SPRING	
A5	4G		G02-0719-04	FLAT SPRING	
CF1,2			L72-0374-05	CERAMIC FILTER (455KHZ)	
CF3			L72-0366-05	CERAMIC FILTER (455KHZ)	
L1			L40-2285-48	SMALL FIXED INDUCTOR (220NH)	
L2			L40-4785-48	SMALL FIXED INDUCTOR	
L3			L40-1011-15	SMALL FIXED INDUCTOR	
L4		*	L34-4397-05	COIL	
L5			L40-1011-15	SMALL FIXED INDUCTOR	
L8		*	L40-4711-15	SMALL FIXED INDUCTOR	
L9			L40-1011-15	SMALL FIXED INDUCTOR	
L10			L40-1092-12	SMALL FIXED INDUCTOR	
L11-17			L40-1011-15	SMALL FIXED INDUCTOR	
L18			L40-1001-15	SMALL FIXED INDUCTOR	
L19,20		*	L39-1245-05	COIL	
L21		*	L40-2711-33	SMALL FIXED INDUCTOR	
L22,23			L40-2201-12	SMALL FIXED INDUCTOR	
L24,25			L40-1092-12	SMALL FIXED INDUCTOR	
L26			L40-1001-15	SMALL FIXED INDUCTOR	
R1			RK73FB2A103J	CHIP R 10K J 1/10W	
R2,3			RK73GB1J103J	CHIP R 10K J 1/16W	
R4-6			RK73GB1J101J	CHIP R 100 J 1/16W	
R7			RK73FB2A103J	CHIP R 10K J 1/10W	
R8			RK73GB1J682J	CHIP R 6.8K J 1/16W	
R9			RK73GB1J222J	CHIP R 2.2K J 1/16W	
R10			RK73GB1J330J	CHIP R 33 J 1/16W	
R11			RK73GB1J183J	CHIP R 18K J 1/16W	
R12			RK73FB2A103J	CHIP R 10K J 1/10W	
R13			RK73GB1J101J	CHIP R 100 J 1/16W	
R16			RK73GB1J680J	CHIP R 68 J 1/16W	
R17,18			RK73FB2A222J	CHIP R 2.2K J 1/10W	
R19			RK73GB1J101J	CHIP R 100 J 1/16W	
R21-24			RK73FB2A103J	CHIP R 10K J 1/10W	
R50			RK73GB1J682J	CHIP R 6.8K J 1/16W	
R51			RK73FB2A104J	CHIP R 100K J 1/10W	
R52			RK73GB1J392J	CHIP R 3.9K J 1/16W	
R53			RK73GB1J221J	CHIP R 220 J 1/16W	
R54			RK73GB1J152J	CHIP R 1.5K J 1/16W	
R55,56			RK73GB1J103J	CHIP R 10K J 1/16W	
R57			RK73GB1J334J	CHIP R 330K J 1/16W	
R58			RK73GB1J470J	CHIP R 47 J 1/16W	
R59			RK73GB1J151J	CHIP R 150 J 1/16W	
R60			RK73GB1J152J	CHIP R 1.5K J 1/16W	
R61			RK73GB1J333J	CHIP R 33K J 1/16W	
R62			RK73GB1J223J	CHIP R 22K J 1/16W	
R63			RK73GB1J102J	CHIP R 1.0K J 1/16W	
R64,65			RK73GB1J470J	CHIP R 47 J 1/16W	
R66			RK73GB1J221J	CHIP R 220 J 1/16W	

Ref. No.	Address	New parts	Parts No.	Description	Destination
R100			RK73FB2A100J	CHIP R 10 J 1/10W	
R101			RK73GB1J472J	CHIP R 4.7K J 1/16W	
R103			RK73GB1J102J	CHIP R 1.0K J 1/16W	
R104			RK73GB1J472J	CHIP R 4.7K J 1/16W	
R105			RK73GB1J102J	CHIP R 1.0K J 1/16W	
R106			RK73GB1J154J	CHIP R 150K J 1/16W	
R109			RK73GB1J102J	CHIP R 1.0K J 1/16W	
R110			RK73GB1J223J	CHIP R 22K J 1/16W	
R111			RK73GB1J222J	CHIP R 2.2K J 1/16W	
R113			RK73GB1J104J	CHIP R 100K J 1/16W	
R114			RK73GB1J472J	CHIP R 4.7K J 1/16W	
R117			RK73GB1J823J	CHIP R 82K J 1/16W	
R118			RK73GB1J222J	CHIP R 2.2K J 1/16W	
R119,120			RK73GB1J223J	CHIP R 22K J 1/16W	
R121,122			RK73GB1J123J	CHIP R 12K J 1/16W	
R123			RK73GB1J223J	CHIP R 22K J 1/16W	
R124			RK73GB1J103J	CHIP R 10K J 1/16W	
R126			RK73GB1J183J	CHIP R 18K J 1/16W	
R127,128			RK73GB1J103J	CHIP R 10K J 1/16W	
R129			RK73GB1J472J	CHIP R 4.7K J 1/16W	
R130			RK73GB1J223J	CHIP R 22K J 1/16W	
R131			RK73GB1J101J	CHIP R 100 J 1/16W	
R132			RK73GB1J472J	CHIP R 4.7K J 1/16W	
R133			RK73GB1J103J	CHIP R 10K J 1/16W	
R134,135			RK73GB1J152J	CHIP R 1.5K J 1/16W	
R136			RK73GB1J331J	CHIP R 330 J 1/16W	
R137			RK73FB2A102J	CHIP R 1.0K J 1/10W	
R138			RK73GB1J152J	CHIP R 1.5K J 1/16W	
R139			RK73GB1J223J	CHIP R 22K J 1/16W	
R140			RK73GB1J470J	CHIP R 47 J 1/16W	
R141			RK73GB1J392J	CHIP R 3.9K J 1/16W	
R142,143			RK73GB1J222J	CHIP R 2.2K J 1/16W	
R144			RK73GB1J101J	CHIP R 100 J 1/16W	
R145			RK73GB1J472J	CHIP R 4.7K J 1/16W	
R146,147			RK73GB1J101J	CHIP R 100 J 1/16W	
R148			RK73GB1J471J	CHIP R 470 J 1/16W	
R149			RK73GB1J101J	CHIP R 100 J 1/16W	
R150			RK73GB1J471J	CHIP R 470 J 1/16W	
R151			RK73GB1J472J	CHIP R 4.7K J 1/16W	
R152			RK73GB1J152J	CHIP R 1.5K J 1/16W	
R153,154			RK73GB1J331J	CHIP R 330 J 1/16W	
R155			RK73GB1J222J	CHIP R 2.2K J 1/16W	
R156			RK73GB1J332J	CHIP R 3.3K J 1/16W	
R157			RK73GB1J222J	CHIP R 2.2K J 1/16W	
R158,159			RK73GB1J472J	CHIP R 4.7K J 1/16W	
R160			RK73GB1J103J	CHIP R 10K J 1/16W	
R161			RK73GB1J222J	CHIP R 2.2K J 1/16W	
R162,163			RK73GB1J331J	CHIP R 330 J 1/16W	
R164			RK73GB1J222J	CHIP R 2.2K J 1/16W	
R165			RK73GB1J331J	CHIP R 330 J 1/16W	
R166			RK73GB1J392J	CHIP R 3.9K J 1/16W	
R167			RK73GB1J472J	CHIP R 4.7K J 1/16W	
R168			RK73GB1J100J	CHIP R 10 J 1/16W	
R169			RK73GB1J471J	CHIP R 470 J 1/16W	
R170			RK73GB1J101J	CHIP R 100 J 1/16W	
R171,172			RK73FB2A100J	CHIP R 10 J 1/10W	
R173			RK73GB1J101J	CHIP R 100 J 1/16W	
R174			RK73GB1J123J	CHIP R 12K J 1/16W	
R175			RK73FB2A123J	CHIP R 12K J 1/10W	

PARTS LIST

TX-RX UNIT (X57-4620-00)

Ref. No.	Address	New parts	Parts No.	Description	Destination
R176			RK73FB2A183J	CHIP R 18K J 1/10W	
R177			RK73GB1J183J	CHIP R 18K J 1/16W	
R178			RK73FB2A153J	CHIP R 15K J 1/10W	
R179			RK73GB1J103J	CHIP R 10K J 1/16W	
R180			RK73GB1J821J	CHIP R 820 J 1/16W	
R181			RK73GB1J222J	CHIP R 2.2K J 1/16W	
R182			RK73GB1J103J	CHIP R 10K J 1/16W	
R183			RK73FB2A153J	CHIP R 15K J 1/10W	
R184			RK73GB1J272J	CHIP R 2.7K J 1/16W	
R185			RK73GB1J153J	CHIP R 15K J 1/16W	
R186			RK73FB2A222J	CHIP R 2.2K J 1/10W	
R187			RK73GB1J223J	CHIP R 22K J 1/16W	
R188			RK73GB1J101J	CHIP R 100 J 1/16W	
R189,190			RK73GB1J153J	CHIP R 15K J 1/16W	
R191,192			RK73GB1J222J	CHIP R 2.2K J 1/16W	
R193,194			RK73GB1J223J	CHIP R 22K J 1/16W	
R196			RK73FB2A472J	CHIP R 4.7K J 1/10W	
R197			RK73GB1J103J	CHIP R 10K J 1/16W	
R198,199			RK73GB1J104J	CHIP R 100K J 1/16W	
R200			RK73FB2A101J	CHIP R 100 J 1/10W	
R201			RK73GB1J221J	CHIP R 220 J 1/16W	
R202,203			RK73GB1J104J	CHIP R 100K J 1/16W	
R204			RK73GB1J222J	CHIP R 2.2K J 1/16W	
R205			RK73GB1J272J	CHIP R 2.7K J 1/16W	
R206			RK73GB1J224J	CHIP R 220K J 1/16W	
R207			RK73GB1J222J	CHIP R 2.2K J 1/16W	
R208			RK73GB1J123J	CHIP R 12K J 1/16W	
R209			RK73GB1J563J	CHIP R 56K J 1/16W	
R215			RK73GB1J681J	CHIP R 680 J 1/16W	
R220			RK73GB1J103J	CHIP R 10K J 1/16W	
R300			RK73FB2A100J	CHIP R 10 J 1/10W	
R301			RK73GB1J101J	CHIP R 100 J 1/16W	
R303-319			RK73GB1J101J	CHIP R 100 J 1/16W	
R320			RK73GB1J102J	CHIP R 1.0K J 1/16W	
R323			RK73GB1J101J	CHIP R 100 J 1/16W	
R325			RK73FB2A473J	CHIP R 47K J 1/10W	
R330			RK73GB1J470J	CHIP R 47 J 1/16W	
R331			RK73GB1J102J	CHIP R 1.0K J 1/16W	
R332			RK73GB1J222J	CHIP R 2.2K J 1/16W	
R334			RK73GB1J331J	CHIP R 330 J 1/16W	
R335			RK73GB1J101J	CHIP R 100 J 1/16W	
R336			RK73GB1J102J	CHIP R 1.0K J 1/16W	
R337,338			RK73GB1J124J	CHIP R 120K J 1/16W	
R339,340			RK73GB1J334J	CHIP R 330K J 1/16W	
R343			RK73GB1J471J	CHIP R 470 J 1/16W	
R344			RK73FB2A2R2J	CHIP R 2.2 J 1/10W	
R345-347			RK73GB1J101J	CHIP R 100 J 1/16W	
R348,349			RK73GB1J473J	CHIP R 47K J 1/16W	
R350,351			RK73FB2A473J	CHIP R 47K J 1/10W	
R352-354			RK73GB1J473J	CHIP R 47K J 1/16W	
R355			RK73GB1J103J	CHIP R 10K J 1/16W	
R356			RK73GB1J473J	CHIP R 47K J 1/16W	
R357			RK73GB1J103J	CHIP R 10K J 1/16W	
R358			RK73GB1J473J	CHIP R 47K J 1/16W	
R359			RK73GB1J101J	CHIP R 100 J 1/16W	
R364,365			RK73GB1J222J	CHIP R 2.2K J 1/16W	
R366			R92-1252-05	CHIP R 0 OHM	
R367,368			RK73FB2A473J	CHIP R 47K J 1/10W	
R369			RK73GB1J473J	CHIP R 47K J 1/16W	

Ref. No.	Address	New parts	Parts No.	Description	Destination
R371-374			RK73GB1J473J	CHIP R 47K J 1/16W	
R376			RK73GB1J473J	CHIP R 47K J 1/16W	
R377,378			RK73FB2A473J	CHIP R 47K J 1/10W	
R379			RK73GB1J473J	CHIP R 47K J 1/16W	
R380-418			RK73FB2A103J	CHIP R 10K J 1/10W	
R419-428			RK73GB1J101J	CHIP R 100 J 1/16W	
R429			RK73FB2A103J	CHIP R 10K J 1/10W	
R430			RK73GB1J472J	CHIP R 4.7K J 1/16W	
R431,432			RK73GB1J103J	CHIP R 10K J 1/16W	
R433			RK73GB1J102J	CHIP R 1.0K J 1/16W	
R434			RK73GB1J470J	CHIP R 47 J 1/16W	
R435,436			RK73GB1J472J	CHIP R 4.7K J 1/16W	
VR1,2			R12-6732-05	TRIMMING POT. 470	
VR3			R12-6742-05	TRIMMING POT. 22K	
D1-4			RLS73	DIODE	
D5			1SV166	DIODE	
D7			DAP202K	DIODE	
D8			RLS73	DIODE	
IC1,2		*	DSP56002FC40	IC	
IC3		*	MBCG24173-6173	IC (GATE ARRAY)	
IC4		*	27C256PCJJTC-K	IC	
IC5		*	27C256PCJJUC-K	IC	
IC6		*	27C256PCJJVC-K	IC	
IC7		*	MCM56824AFN20	IC	
IC7		*	MCM56824AFN25	IC	
IC9		*	7032LC44JLQA	IC	
IC15			MB86001PF	IC	
IC16			AK4318-VS	IC	
IC17			NJM2100M	IC (OP AMPLIFIER)	
IC18			MC74HC4053F	IC (ANALOG SW)	
IC19-21			NJM4560M	IC (OP AMP X2)	
IC22		*	AD822AR	IC	
IC23			MC74HC4052F	IC (HPF)	
IC24			NJM2100M	IC (OP AMPLIFIER)	
IC25			AK5340-VS	IC (AD CONVERTER (18 Bit))	
IC26			M62363FP	IC (8bit D/A CONVERTER)	
IC27			AK4318-VS	IC	
IC28			NJM2100M	IC (OP AMPLIFIER)	
IC29			M51131L	IC (ELECTRO VOLUME)	
IC30			NJM2100M	IC (OP AMPLIFIER)	
IC31			M51131L	IC (ELECTRO VOLUME)	
IC33			LA4422	IC (AF POWER AMP/ 5.8W)	
IC34			PCM69AU	IC (18bit D/A CONVERTOR)	
IC35		*	AD822AR	IC	
IC36			NJM4560M	IC (OP AMP X2)	
IC37,38			UPC7805H	IC (VOLTAGE REGULATOR/ +5V)	
IC39			NJM78L05UA	IC (VOLTAGE REGULATOR/ +5V)	
IC40			NJM78L08UA	IC (VOLTAGE REGULATOR/ +8V)	
IC41,42			NJM3404AM	IC (OP AMP X2)	
IC43			NJM5532M	IC (OP AMP)	
IC44			TC7S04F	IC (2CH NAND GATE)	
Q1			DTC124EK	DIGITAL TRANSISTOR	
Q2,3			2SC2714(Y)	TRANSISTOR	
Q4			DTC124EK	DIGITAL TRANSISTOR	
Q5-7			2SC3324(G)	TRANSISTOR	
Q8			2SK210(GR)	FET	
Q9,10			2SC2714(Y)	TRANSISTOR	
Q12			2SC2712(Y)	TRANSISTOR	
Q13-17			2SC2412K(S)	TRANSISTOR	

PARTS LSIT

TX-RX UNIT (X57-4620-00)
VCO2 (X58-3390-03)

Ref. No.	Address	New parts	Parts No.	Description	Destination
Q22			DTC124EK	DIGITAL TRANSISTOR	
Q23			2SC2712(Y)	TRANSISTOR	
Q25			DTA143EK	DIGITAL TRANSISTOR	
Q26			DTC124XK	DIGITAL TRANSISTOR	
Q27			DTC143EK	DIGITAL TRANSISTOR	
VCO2 (X58-3390-03)					
-			B42-2437-04	S/NO LABEL	
C1			CK73FB1H102K	CHIP C 1000PF K	
C2			CC73FSL1H101J	CHIP C 100PF J	
C3			CC73FCH1H070D	CHIP C 7.0PF D	
C4			CC73FCH1H070D	CHIP C 7.0PF D	
C4			CC73FCH1H220J	CHIP C 22PF J	
C6			CC73FCH1H180J	CHIP C 18PF J	
C7			CC73FCH1H120J	CHIP C 12PF J	
C8,9			CK73FB1H102K	CHIP C 1000PF K	
C10			CC73FCH1H010C	CHIP C 1.0PF C	
C11			CK73FB1H102K	CHIP C 1000PF K	
TC1			C05-0331-15	TRIMMER CAPACITOR 10PF	
TP1-3			E23-0464-05	TERMINAL	
-			F11-1085-04	SHIELDING CASE	
			F11-1086-14	SHIELDING COVER	
-			G13-0904-04	CUSHION (COVER)	
L1			L33-0690-05	CHOKE COIL (3.3UH)	
L2			L34-2353-05	COIL	
T	2F		N30-2604-41	PAN HEAD MACHIN SCREW	
R1			RK73FB2A682J	CHIP R 6.8K J 1/10W	
R2			RK73FB2A271J	CHIP R 270 J 1/10W	
R3			RK73FB2A330J	CHIP R 33 J 1/10W	
R4,5			RK73FB2A472J	CHIP R 4.7K J 1/10W	
R6			RK73FB2A471J	CHIP R 470 J 1/10W	
R7			RK73FB2A560J	CHIP R 56 J 1/10W	
D1			1SV164	DIODE	
Q1			2SK508NV(K52)	FET	
Q2			2SC2714(Y)	TRANSISTOR	

EXPLODED VIEW

H	M3 x 6 (F)	: N32-3006-46
I	M3 x 6 (OC)	: N33-3006-41
J	M2.6 x 6 (Br-Tap)	: N87-2606-46
K	M3 x 6 (Br-Tap)	: N87-3006-46
M	M2.6 x 8 (F-Tap)	: N88-2608-46
P	M3 x 10 (TP-T)	: N91-3010-46

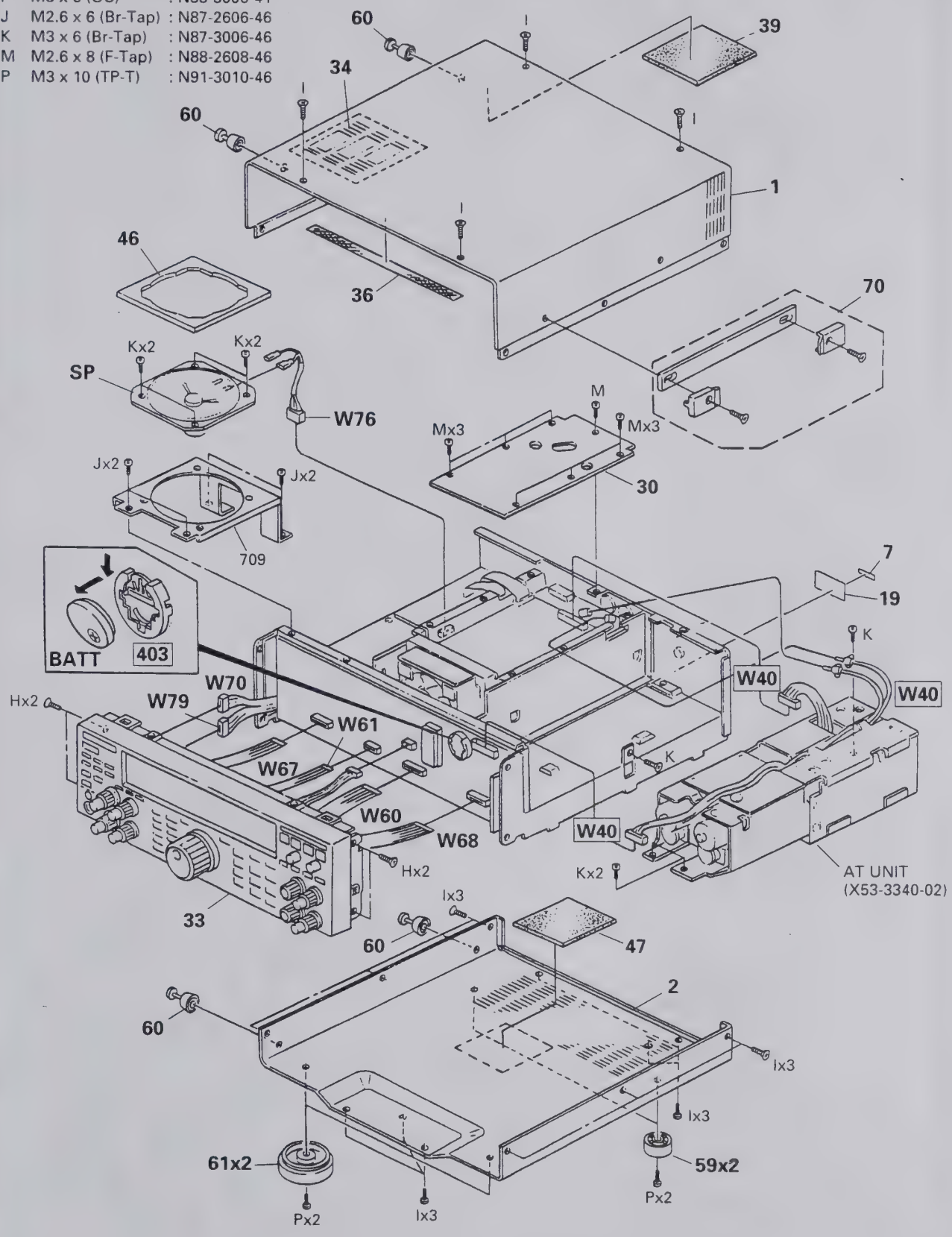

Parts with the exploded numbers larger than 700 are not supplied.

EXPLODED VIEW

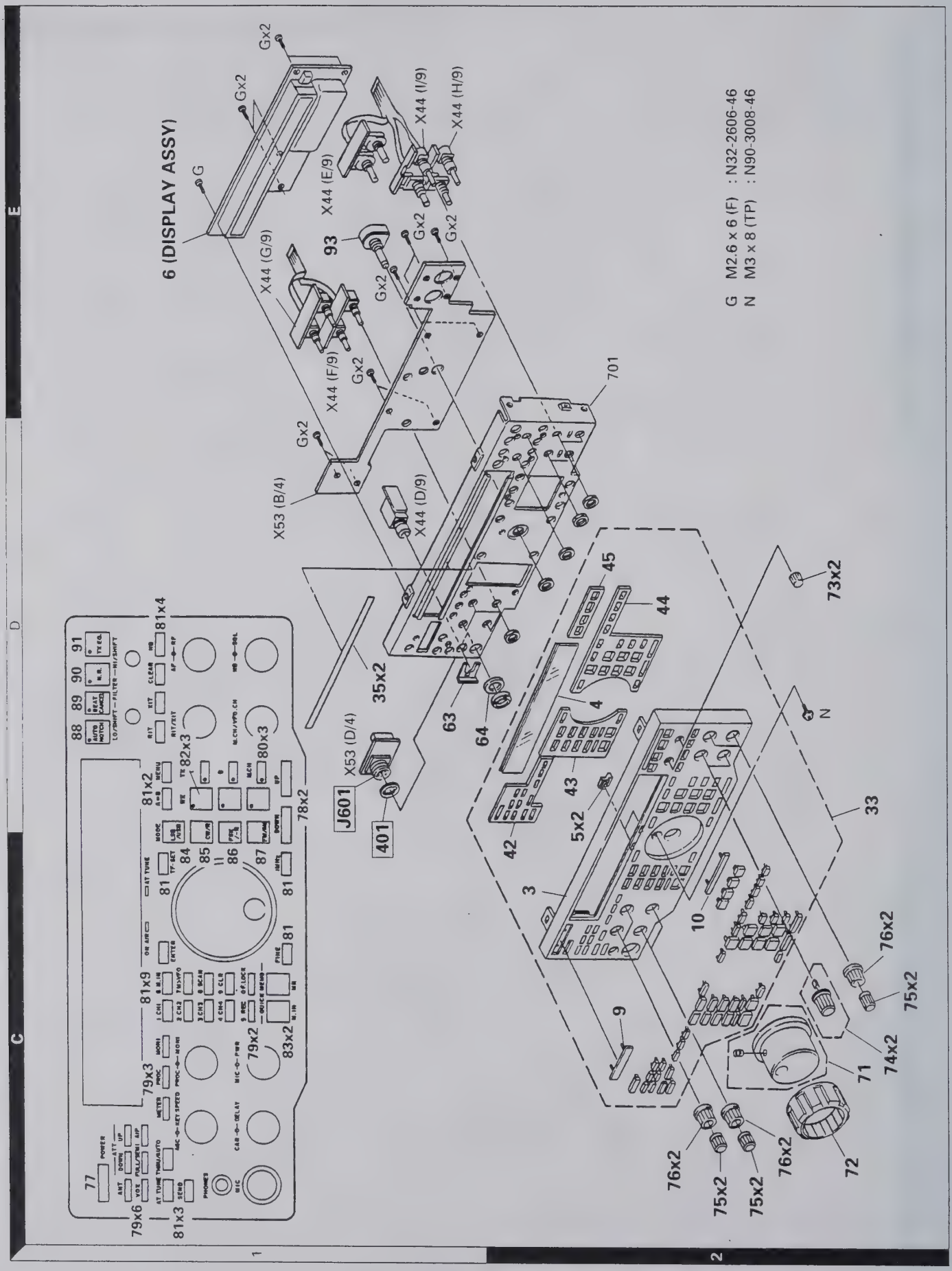

Parts with the exploded numbers larger than 700 are not supplied.

EXPLODED VIEW

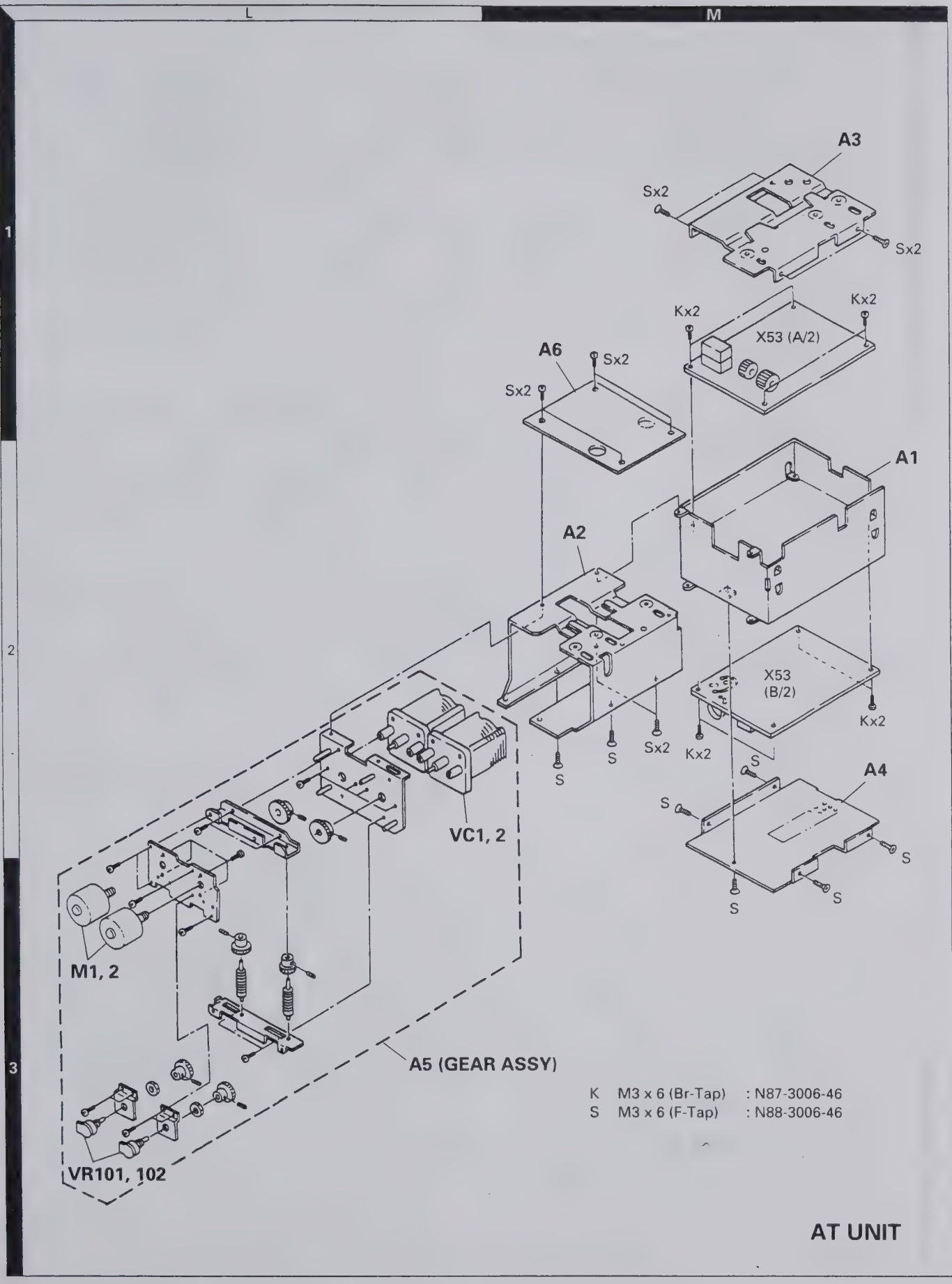

K M3 x 6 (Br-Tap) : N87-3006-46
S M3 x 6 (F-Tap) : N88-3006-46

AT UNIT

PACKING

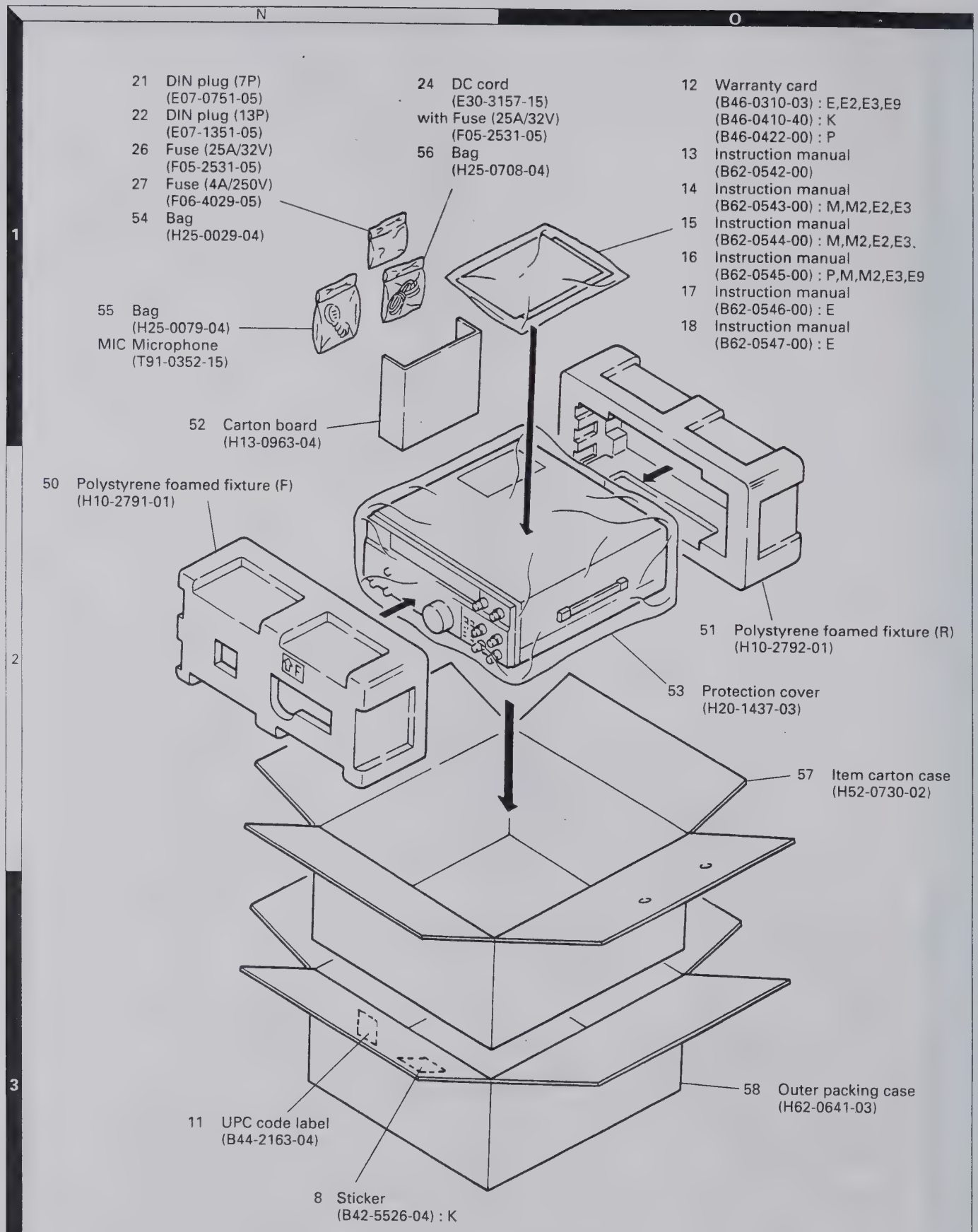
N
O
1
2
3
21 DIN plug (7P)
(E07-0751-05)
22 DIN plug (13P)
(E07-1351-05)
26 Fuse (25A/32V)
(F05-2531-05)
27 Fuse (4A/250V)
(F06-4029-05)
54 Bag
(H25-0029-04)
24 DC cord
(E30-3157-15)
with Fuse (25A/32V)
(F05-2531-05)
56 Bag
(H25-0708-04)
12 Warranty card
(B46-0310-03) : E,E2,E3,E9
(B46-0410-40) : K
(B46-0422-00) : P
13 Instruction manual
(B62-0542-00)
14 Instruction manual
(B62-0543-00) : M,M2,E2,E3
15 Instruction manual
(B62-0544-00) : M,M2,E2,E3,
16 Instruction manual
(B62-0545-00) : P,M,M2,E3,E9
17 Instruction manual
(B62-0546-00) : E
18 Instruction manual
(B62-0547-00) : E
55 Bag
(H25-0079-04)
MIC Microphone
(T91-0352-15)
52 Carton board
(H13-0963-04)
50 Polystyrene foamed fixture (F)
(H10-2791-01)
51 Polystyrene foamed fixture (R)
(H10-2792-01)
53 Protection cover
(H20-1437-03)
57 Item carton case
(H52-0730-02)
58 Outer packing case
(H62-0641-03)
11 UPC code label
(B44-2163-04)
8 Sticker
(B42-5526-04) : K

ADJUSTMENT

Required Test Equipment

1. DC Voltmeter (DC V.M)
1) Input resistance : More than 1MΩ
2) Voltage range : 1.5 to 1000V AC/DC
Note : A high-recision multimeter may be used. However, accurate readings can not be obtained for high-impedance circuits.

2. DC Ammeter
1) Current range : 100mA, 1.5A, 15A, high-precision ammeter may be used.

3. RF VTVM (RF V.M)
1) Input impedance : 1MΩ and less than 3pF, min.
2) Voltage range : 10mV to 300V
3) Frequency range : 10kHz to 500MHz

4. AF Voltmeter (AF V.M)
1) Frequency range : 50Hz to 10kHz
2) Input resistance : 1MΩ or greater
3) Voltage range : 10mV to 30V

5. AF Generator (AG)
1) Frequency range : 200Hz to 5kHz
2) Output : 1mV or less to 1V, low distortion

6. AF Dummy Load (DM. SP)
1) Impedance : 8Ω
2) Dissipation : 3W or greater

7. Oscilloscope
Requires high sensitivity, and external synchronization capability (150MHz or greater).

8. Sweep Generator (Sweep G.)
1) Center frequency : 50kHz to 90MHz
2) Frequency deviation : Maximum ±35kHz
3) Output voltage : 100mV or greater

9. Standard Signal Generator (SSG)
1) Frequency range : 50kHz to 50MHz
2) Output : –133dBm/0.05μV to 7dBm/500mV
3) Output impedance : 50Ω
4) AM and FM modulation can be possible
Note : Generator must be frequency stable.

10. Frequency Counter (f. counter)
1) Minimum input voltage : 50mV
2) Frequency range : 150MHz or greater

11. Noise Generator (Noise G.)
Must generate ignition noise containing harmonics beyond 30MHz.

12. RF Dummy Load
1) Impedance : 150Ω and 50Ω
2) Dissipation : 150W or greater

13. Linear Detector
1) Frequency range : 30MHz

14. Power Meter
1) Impedance : 50Ω
2) Dissipation : 300W continuous or greater
3) Frequency limits : 60MHz or greater

15. Spectrum Analyzer
1) Frequency range : 100kHz to 110MHz or greater
2) Bandwidth : 1kHz to 3MHz

16. Detector
1) For adjustment of BPF

2) For adjustment of PLL/VCO BPF

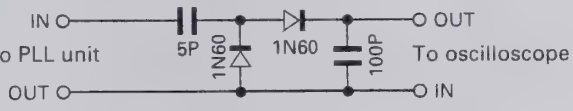

17. Directional Coupler

18. Monitor Receiver
R-1000 class

19. Microphone
MC-43S or MC-60S8

20. Tracking Generator

21. Distortion Meter

22. Double Signal Pad (50Ω)

ADJUSTMENT

Preparation

Unless otherwise specified, knobs and switches should be set as follows.

POWER	ON	PROCESSOR	Center
ATT	0	MIC	Center
AGC	Center	PWR	MAX
NB LEVEL	Center	CAR	Center
SQL	0		
AF	0		
RF	MAX		

Front Panel

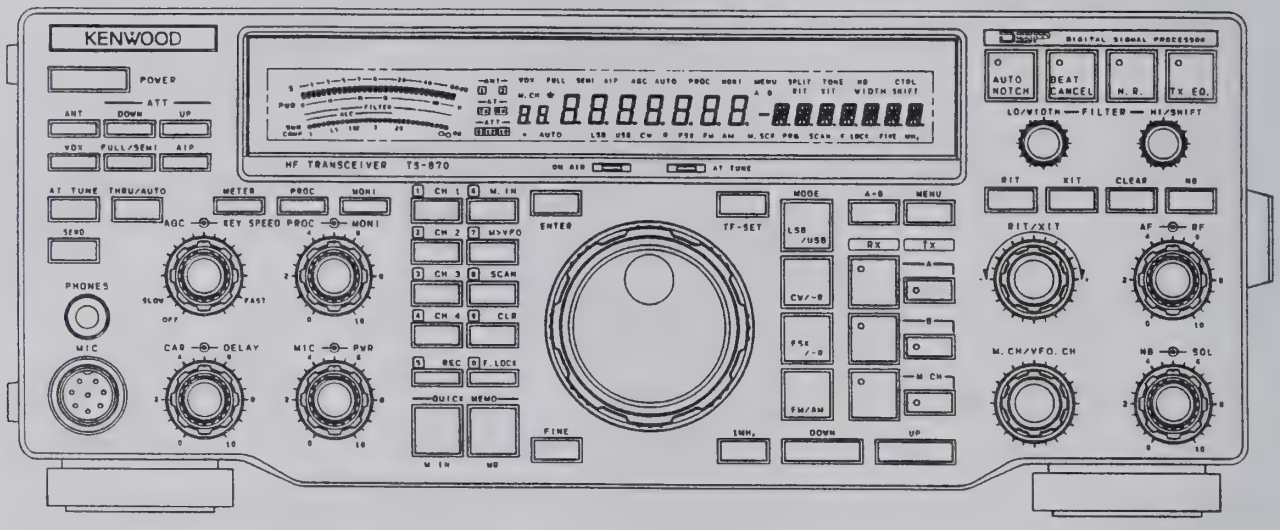

Rear Panel

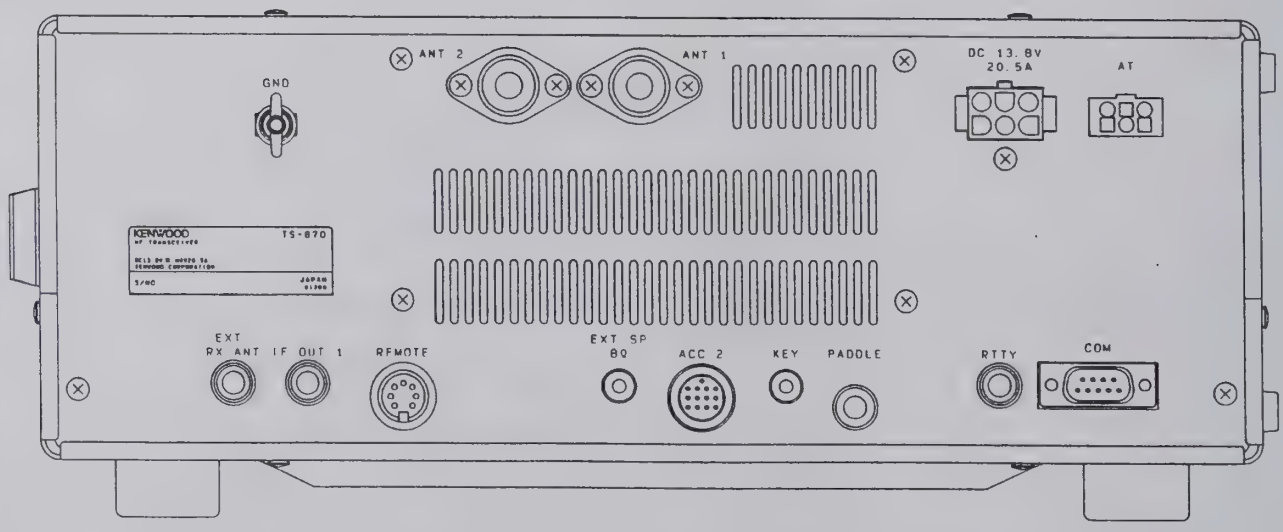

ADJUSTMENT

Service Jig

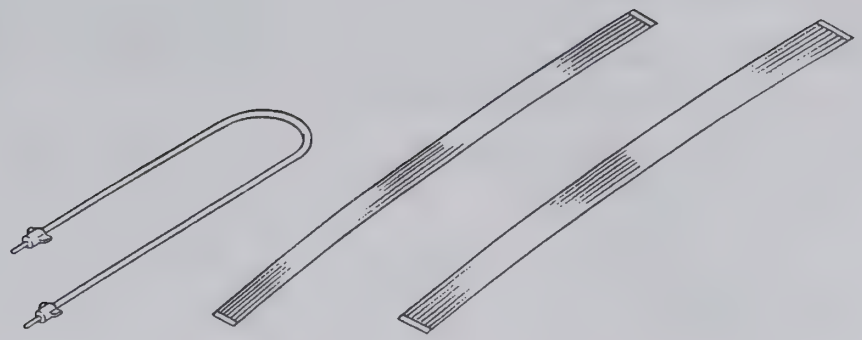

A. Lead wire with minipin plug
(E37-0064-05)
About 27cm

B . Flat cable (8P)
(E37-0581-05)
About 25cm

C. Flat cable (12P)
(E37-0580-05)
About 25cm

How to Use

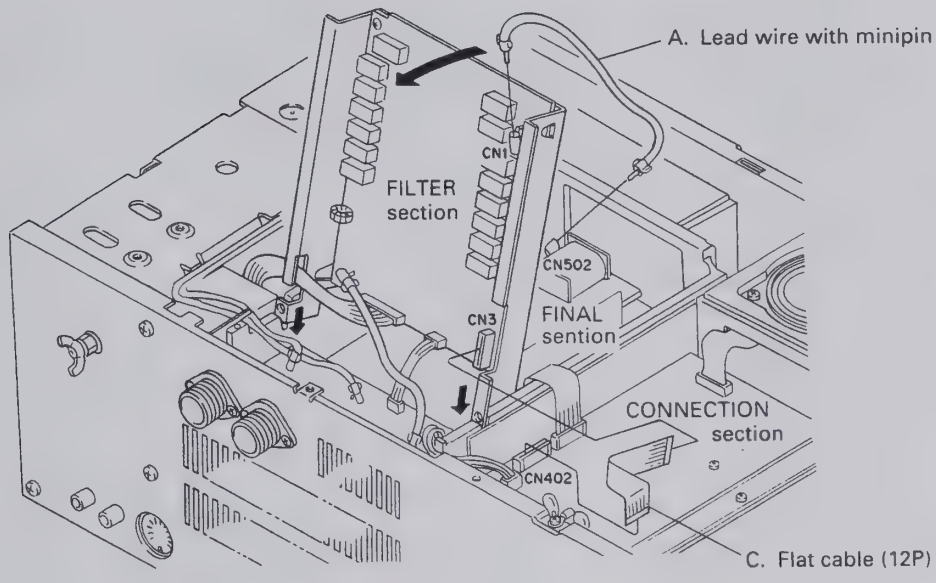

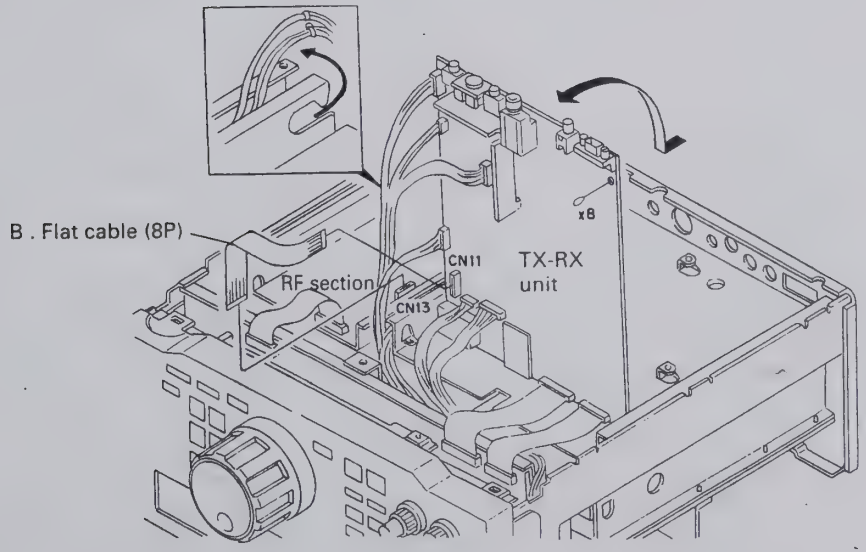

ADJUSTMENT

Service Adjustment Mode

■ Outline

- The TS-870S is adjusted by the normal method and by another method using the service adjustment mode.
- In the adjustment mode, there are 28 menu numbers A0 to BB. All adjustment data items are saved in the EEPROM.
- When the service adjustment mode is entered, data is read from the EEPROM and placed in the CPU RAM so that settings can be modified.
- The EEPROM is updated only when data is written in Menu No. BA.

  Note : Transmission is possible in reception-related adjustment modes.

■ Operation procedure

1. Adjustment mode start
   Hold down the [N.R.] key and [LSB/USB] key, and turn the [POWER] switch ON to enter the adjustment mode. The menu number will appear in M. CH on the display.
2. Adjustment mode menu number selection
   When the [M. CH/VFO. CH] control is turned, the menu number changes.
3. Adjustment mode data writing
   Press the [UP]/[DOWN] key or the microphone [UP]/[DOWN] key in MENU No. BA.
4. Adjustment mode cancel
   When the [CLR] key is pressed, the normal memory-channel display returns.

   Note : If the power is switched OFF in the adjustment mode, it is canceled.

Service Adjustment Mode Menu

Menu No.	Adjustment function	Description
A0	System	Checksum display (Program version confirmation)
A1	ALC	ALC reference voltage adjustment
A2	S-meter (SSB)	Start level setting
A3		S9 level setting
A4		Full-scale level setting
A5	Filter	8.83MHz IF filter center frequency correction
A6		455kHz IF filter center frequency correction
A7	Power adjustment	100W adjustment (With power meter curve)
A8		50W adjustment (With power meter curve)
A9		25W adjustment (With power meter curve)
AA		10W adjustment (With power meter curve)
AB	TX gain	1.9MHz band
AC		3.5MHz band
AD		7MHz band
AE		10MHz band
AF		14MHz band
B0		18MHz band
B1		21MHz band
B2		24.5MHz band
B3		29MHz band
B4	ALC meter	Stare level setting
B5		Maximum zone level setting
B6		Full-scale level setting
B7	SWR protection	Protection operation setting
B8	SWR meter	VSWR=3 level setting
B9	FM	FM deviation setting
BA	System	Writing into EEPROM
BB	Display	All LCD segments light (Not light ON AIR lamp)

ADJUSTMENT

Display Check

Item	Condition	Measurement			Adjustment			Specifications/Remarks
		Test-equipment	Unit	Terminal	Unit	Parts	Method	
1. All reset	1) DC IN : DC 13.8V Pushing [A=B] key down, [POWER] : ON.				Front panel	Display	After displaying HELLO, the display is reset as follows: DISP f. : 14.000.00 MODE : USB METER : ALC ANT : 1 AGC	Display should be normal Should be at the reset frequency.
2. All LCD segments light	1) Menu No. : BB						Check	All LCD segments light.

PLL Section

Item	Condition	Measurement			Adjustment			Specifications/Remarks
		Test-equipment	Unit	Terminal	Unit	Parts	Method	
1. 20MHz frequency adj.	1) [POWER] : ON MODE : FM Receive	f. counter	PLL	CN510 (TP)	PLL	TC800	Frequency adjust.	20.000MHz ± 20Hz
2. 20MHz peak adj.	1) Display f. : 14.000MHz MODE : USB Receive	RF V.M		CN503		L528	MAX.	
3. 60MHz BPF adj.	1) MODE : FM Receive			IC506 2 pin		L529 L530	Repeat for MAX.	
4. 55MHz BPF adj. and frequency check	1) Display f. : 14.000MHz MODE : FM Receive			IC508 11 pin		L518 L519 L520	Repeat for MAX.	
	2) Display f. : 14.000MHz	f. counter					Frequency check	55.299~55.301MHz
5. Lock voltage adj. & check VCO1	1) Display f. : 30kHz	DC V.M		TP501	PLL	TC506	1.8V	1.8 ± 0.03V
	2) Display f. : 7.489MHz						Voltage check	4.5~7.0V
6. Lock voltage adj. & check VCO2	1) Display f. : 7.500MHz				PLL	TC507	1.8V	1.8 ± 0.03V
	2) Display f. : 14.489MHz						Voltage check	4.5~7.0V
7. Lock voltage adj. & check VCO3	1) Display f. : 14.490MHz				PLL	TC508	1.8V	1.8 ± 0.03V
	2) Display f. : 21.489MHz						Voltage check	4.5~7.0V
8. Lock voltage adj. & check VCO4	1) Display f. : 21.490MHz				PLL	TC509	1.8V	1.8 ± 0.03V
	2) Display f. : 30.000MHz						Voltage check	4.5~7.0V
9. Lock voltage adj. LO2A (VCO2) X58-3390-03	1) Display f. : 30.000MHz			TP502	VCO2 X58-3390	TC1	5.0V	5.0 ± 0.03V

ADJUSTMENT

Item	Condition	Measurement			Adjustment			Specifications/Remarks
		Test-equipment	Unit	Terminal	Unit	Parts	Method	
10. Output level check LO1 (CN504)	1) Display f. : 14.000MHz MODE : USB Receive Meaturement condition : 50Ω terminated			CN504			Output level check	–5~+2dBm
LO2A (CN505)				CN505				–1~+6dBm (64.220MHz)
LO3 (CN502)				CN502				–6~+0dBm (8.375MHz)
20MHz (CN503)				CN503				–10~+0dBm (20.0000MHz)
LO4 (CN501)		Oscilloscope		CN501				–10~+0dBm (10.0kHz)
11. 20MHz frequency (Final check)	1) MODE : USB Receive	f. counter		CN510 (TP)	PLL	TC800	Check	20.000MHz ± 20Hz

Receiver Section

Item	Condition	Measurement			Adjustment			Specifications/Remarks
		Test-equipment	Unit	Terminal	Unit	Parts	Method	
1. DSP PLL lock voltage adj.	1) Display f. : 14.000MHz MODE : USB	DC V.M	TX-RX	TP1	TX-RX	L4	3.50V	±0.1V
2. AGC voltage adj.	1) Display f. : 14.000MHz MODE : CW [RF] GAIN : MAX [AGC] : OFF			TP2		VR2	3.00V	±0.1V
3. MCF adj.	1) Display f. : 14.000MHz MODE : USB [AGC] : OFF Spectrum analyzer setting Center f. : 73.050MHz Frequency span : 50kHz ATT : –10dBm VBW, RBW : 1kHz V.REF : 2dB/DIV	Spectrum analyzer Tracking generator	RF	CN16 CN17	RF	L65 L67 L70 L72	Adjust so that gain is max. and band shown at right becomes flat.	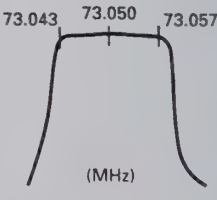
4. BPF adj.	1) Display f. : 7.000MHz MODE : USB [AGC] : OFF [AIP] : OFF Spectrum analyzer setting Center f. : 7.100MHz Frequency span : 2MHz	Spectrum analyser Tracking generator	Rear panel RF	ANT CN15	RF	L28 L29 L30 L31	Waveform is as shown in the figure at the right.	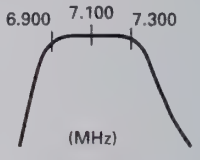
	2) Display f. : 14.000MHz Spectrum analyzer setting Center f. : 14.000MHz Frequency span : 5MHz					L38 L39 L40		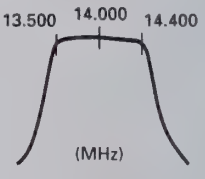
	3) Display f. : 21.000MHz Spectrum analyzer setting Center f. : 21.200MHz Frequency span : 10MHz					L44 L45 L46		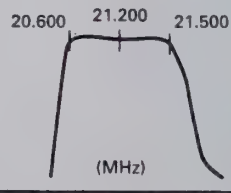

ADJUSTMENT

Item	Condition	Measurement			Adjustment			Specifications/Remarks
		Test-equipment	Unit	Terminal	Unit	Parts	Method	
(28MHz BPF adj.)	1) Display f. : 29.800MHz MODE : USB [AGC] : FAST SSG frequency : 22.101MHz SSG output : –113dBm	SSG AF V.M Oscilloscope DM. SP	Rear panel	ANT EXT. SP	RF	L50 L52	Adjust so that the gain is MAX.	MAX.
5. RX IF AMP adj.	1) Display f. : 14.100MHz MODE : USB [AGC] : OFF [AIP] : OFF AF output : 0.63V/8Ω SSG frequency : 14.101MHz SSG output : –119dBm	SSG AF V.M Oscilloscope DM. SP	Rear panel	ANT EXT. SP	RF Connec-tion	L75 L77 L451 L452 L458	Repeat 2~3 times for MAX AF output reading.	
• Item 6 to 10 below are adjusted in the adjustment mode. To terminate the adjustment menu in the middle, save your settings with Menu No. BA.								
6. Checksum check	1) Menu No. : A0				Front panel	Display	Check	Display : E7b9
7. ALC voltage adj.	1) Menu No. : A1	DC V.M	RF	TP2	Front panel	[RIT/XIT] knob	2.70V	±0.02V
8. S-meter adj.	1) Menu No. : A2 SSG frequency : 14.101MHz SSG output : –110dBm	SSG AF V.M Oscilloscope DM. SP	Rear panel	ANT EXT. SP	TX-RX	VR1	Display : 05	±02
S1	2) Menu No. : A2 SSG output : –107dBm				Front panel	[UP] key	[UP] key : Push once time	Reference display : 12±06
S9	3) Menu No. : A3 SSG output : –81dBm							Reference display : 45±10
Full-scale	4) Menu No. : A4 SSG output : –23dBm							Reference display : 80±20
9. 8.83MHz IF filter adj.	1) Menu No. : A5 SSG1 f. : 1.79980MHz SSG1 output : –60dBm SSG2 f. : 1.80260MHz SSG2 output : –60dBm	SSG1 SSG2 Double signal pad Oscilloscope (10:1 probe)	Rear panel Connec-tion	ANT TP401	Front panel	[RIT/XIT] knob	The waveforms must cross.	OK 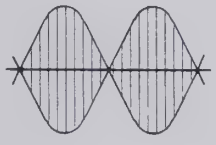
10. 455kHz IF filter adj.	1) Menu No. : A6			TP402				NG 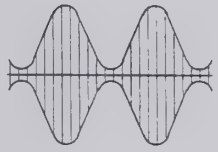
• Writing data : After items 6 to 10 have been adjusted: 1) Menu No. : BA 2) [UP] key : Push once time Display "rEAdy" → "good" (If "nG" is displayed, enter data again.) 3) [CLR] key : Push once time (Adjustment mode terminated)								

ADJUSTMENT

Item	Condition	Measurement			Adjustment			Specifications/Remarks
		Test-equipment	Unit	Terminal	Unit	Parts	Method	
11. ATT check	1) Display f. : 14.100MHz SSG frequency : 14.101MHz SSG output : –107dBm [AGC] : OFF [AIP] : OFF AF output : 1V/8Ω	SSG AF V.M Oscilloscope DM. SP	Rear panel	ANT EXT. SP	Front panel	ATT SW (UP/ DOWN)	AF output should be lowered 6dB at time.	AF output ± 3dB
	a. ATT : 0dB						1.0V	ATT display : None
	b. ATT [UP] key : 6dB						0.5V	ATT display : 6
	c. ATT [UP] key : 12dB						0.25V	ATT display : 12
	d. ATT [UP] key : 18dB						0.125V	ATT display : 18
	e. ATT [DOWN] key : 12dB						0.25V	ATT display : 12
	f. ATT [DOWN] key : 6dB						0.5V	ATT display : 6
	g. ATT [DOWN] key : 0dB						1.0V	ATT display : None
12. S/N check	1) Display f. : Indicated below AF VR : 0.63V/8Ω SSG f. : Indicated below However, USB : +1kHz LSB : –1kHz	SSG AF V.M Oscilloscope Distortion meter DM. SP	Rear panel	ANT EXT. SP				Note : If the frequency is 7.5MHz or less, AIP turns ON automatically. Turn AIP OFF with the AIP switch before starting measurement.
	Frequency / MODE / SSG output / SSG MOD / DEV							
	100kHz AM	–87dBm		1kHz	60%		S/N measurement	10dB or more.
	1.500MHz AM	–77dBm		1kHz	60%			
	1.8MHz LSB	–119dBm		OFF	OFF		MAX sensitivity measurement	0.7V/8Ω or more.
	3.5MHz LSB	–119dBm		OFF	OFF			
	5.5MHz LSB	–119dBm		OFF	OFF			
	7.1MHz LSB	–119dBm		OFF	OFF			
	10.1MHz USB	–119dBm		OFF	OFF			
	12.5MHz USB	–119dBm		OFF	OFF			
	14.1MHz USB	–119dBm		OFF	OFF	←	[AIP] : ON	Sensitivity down 5~15dB.
	18.1MHz USB	–119dBm		OFF	OFF			
	21.1MHz USB	–119dBm		OFF	OFF			
	24.8MHz USB	–123dBm		OFF	OFF			
	29.8MHz USB	–123dBm		OFF	OFF			
	29.8MHz FM	–119dBm		1kHz	3kHz	←	SINAD sentitivity measurement	12dB SINAD or more.
13. SSB squelch check	1) Display f. : 14.100MHz MODE : USB [AGC] : OFF SSG frequency : 14.101MHz SSG output : OFF	SSG AF V.M Oscilloscope DM. SP	Rear panel	ANT EXT. SP	Front panel	[SQL] VR	Set to the point noise disappeared.	Knob position 10 : 00~14 : 00
	2) SSG output : –101dBm						Check	Squelch should open.
	3) [SQL] VR : Fully clockwise							Squelch should close.
	4) SSG output : –83dBm							Squelch should open.
14. FM squelch check	1) Display f. : 29.8MHz MODE : FM SSG output : OFF				Front panel	[SQL] VR	Set o the point noise disappeared.	Knob position 8 : 00~12 : 00
	2) SSG output : –119dBm SSG MOD : 1kHz SSG DEV : 3kHz						Check	Squelch should open.
	3) [SQL] VR : Fully clockwise							Squelch should close.
	4) SSG output : –100dBm							Squelch should open.

ADJUSTMENT

Item	Condition	Measurement			Adjustment			Specifications/Remarks
		Test-equipment	Unit	Terminal	Unit	Parts	Method	
15. NB adj.	1) Display f. : 14.100MHz MODE : USB SSG frequency : 14.101MHz SSG output : –90dBm	SSG AF V.M Oscilloscope DM. SP DC V.M	Rear panel RF	ANT EXT. SP TP1	RF	L81 L82	Voltage minimum	
	2) [NB] key : ON [NB] VR : Center	Noise G.	Rear panel	ANT			Adjust output of noise generator to small input (S1) and large input (S9) and check each.	Noise should disappear.
16. S-meter check	1) Display f. : 14.175MHz MODE : USB [AGC] : FAST [RF] GAIN : MAX SSG frequency : 14.176MHz SSG output : –107dBm	SSG AF V.M Oscilloscope DM. SP	Rear panel	ANT EXT. SP	Front panel	Display	S-meter level : S1	–111~–101dBm
	2) SSG output : –83dBm						S-meter level : S9	–89~–77dBm
	3) [NB] key : ON						S-meter level check	Same as when [NB] key off
17. Auto notch check	1) Display f. : 14.175MHz MODE : USB SSG frequency : 14.1765MHz SSG output : –73dBm [AUTO NOTCH] key : Push (ON)	SSG	Rear panel	ANT	Front panel	Display	S-meter level check	S-meter off.
18. Voice check (equipped on VS-2)	1) [AF] VR : Arbitrary [MENU] key : Push (ON) [M.CH/VFO.CH] knob : Menu No. 48 [UP] key : Step 73 [MENU] key : Push (OFF) [FINE] key : Push (ON)						Check	The displayed frequency can be heard vocally.

Transmitter Section

Item	Condition	Measurement			Adjustment			Specifications/Remarks
		Test-equipment	Unit	Terminal	Unit	Parts	Method	
1. TX MCF adj.	1) Display f. : 14.200MHz MODE : USB Transmit Spectrum analyzer setting TG output : –10dBm Center f. : 8.83MHz Span : 10kHz V.REF : 2dB/DIV	Tracking generator Spectrum analyzer	RF	CN10 TP3	RF	L100	MAX.	
2. TX IF AMP adj.	1) Display f. : 14.200MHz MODE : CW [CAR] VR : Center Disconnect CN4 from the RF unit and connect a 50Ω dummy load. Transmit	50Ω dummy Oscilloscope	RF	CN4	RF Connection	L99,98 L95,94 L92,91 L89 VR3 L457 L456 L455	Repeat 2 or 3 times for MAX.	Reference value 2.5Vp-p or more
	2) After adjustment, set [CAR] VR to MAX for confirmation.							

ADJUSTMENT

Item	Condition	Measurement			Adjustment			Specifications/Remarks
		Test-equipment	Unit	Terminal	Unit	Parts	Method	
3. Final base current	1) Display f. : 14.200MHz MODE : USB [MIC] VR : MIN [CAR] VR : MIN Final unit VR501,502 : MIN Connect ammeter + : External power supply – : Power connector Adjust to minimum current with VR501 and VR502 in the final unit. Transmit	Ammeter			Final	VR501	Current drain (Minimum current) +250mA	First adjust VR501 and VR502 for minimum. Adjust VR501 for an increase of 250mA when switched to TX. Then adjust VR502 for 250mA over this reading.
						VR502	Current drain (Minimum current) + driver current (250mA) + 250mA.	
• Item 4 to 13 below are adjusted in the adjustment mode. To terminate the adjustment menu in the middle, save your settings with Menu No. BA.								
4. ALC adj	1) Menu No. : A7 Transmit	Power meter	Rear panel	ANT	Front panel	[RIT/XIT] knob	100W	±5.0W
5. NULL adj.	1) Menu No. : A7 Transmit	Power meter DC V.M	Rear panel Filter	ANT CN5	Filter	TC1	MIN.	Reference value 0.5V or less
6. ALC frequency response adj.	1) TX [M.CH] key : Push Display f. : 29.700MHz MODE : CW Transmit	Power meter	Front panel	ANT	Filter	VR1	95W	±5.0W
	2) TX [M.CH] key : Push Menu No. : A7 Transmit						100W power check	100W ± 5W When unable to be set within the range, ALC and frequency response to be adjusted.
7. TX power adj. The power meter on the display is also calibrat--ed at the same time.	1) 50W Menu No. : A8 Transmit After adjustment, [UP] key : Push	Power meter	Rear panel	ANT	Front panel	[RIT/XIT] knob	50W	±3.0W
	2) 25W Menu No. : A9 Transmit After adjustment, [UP] key : Push						25W	±2.0W
	3) 10W Menu No. : AA Transmit After adjustment, [UP] key : Push						11W	±2.0W
8. TX gain adj	1) 1.9MHz band Menu No. : AB Transmit	Power meter	Rear panel	ANT	Front panel	[UP] key	Press the [UP] key after the beep sounds for two or three seconds.	
	2) 3.5MHz band Menu No. : AC Transmit							
	3) 7.0MHz band Menu No. : AD Transmit							
	4) 10.1MHz band Menu No. : AE Transmit							
	5) 14.1MHz band Menu No. : AF Transmit							

ADJUSTMENT

Item	Condition	Measurement			Adjustment			Specifications/Remarks
		Test-equipment	Unit	Terminal	Unit	Parts	Method	
	6) 18.0MHz band Menu No. : B0 Transmit	Power meter	Rear panel	ANT	Front panel	[UP] key	Press the [UP] key after the beep sounds for two or three seconds.	
	7) 21.0MHz band Menu No. : B1 Transmit							
	8) 24.9MHz band Menu No. : B2 Transmit							
	9) 29.7MHz band Menu No. : B3 Transmit							
9. ALC meter adj.	1) 1 dot Menu No. : B4 Transmit	Power meter	Rear panel	ANT	Front panel	[UP] key	[UP] key : Push	
	2) Zone MAX Menu No. : B5 Transmit							
	3) Full Menu No. : B6 Transmit							
10. SWR protection adj.	1) Nenu No. : B7 Transmit After adjustment, [UP] key : Push	Through type power meter 150Ωdummy	Rear panel	ANT	Front panel	[RIT/XIT] knob	40W	±3.0W
11. SWR meter adj.	1) Menu No. : B8 Transmit					[UP] key	[UP] key : Push	
12. FM DEV adj.	1) Menu No. : B9 AG output : 1kHz/30mV Transmit	Power meter Linear detector AG	Rear panel Front panel	ANT MIC	Front panel	[RIT/XIT] knob	4.6kHz	±0.1kHz
13. FM MIC sense check	1) Menu No. : B9 AG output : 1kHz/3mV **E,X** AG output : 1kHz/5mV **K,P,M**						Check	3.0kHz ± 0.5kHz
• Writing data : After items 4 to 13 have been adjusted: 1) Menu No. : BA 2) [UP] key : Push once time Display "rEAdy" → "good" (If "nG" is displayed, enter data again.) 3) [CLR] key : Push once time (Adjustment mode terminated)								
14. Spurious adj.	1) Display f. : 24.900MHz MODE : CW Transmit	Power meter Spectrum analyzer	Rear panel	ANT	RF	VR2	±1.65MHz spurious level MIN.	–60dB or less
15. Monitor level check	1) Display f. : 21.100MHz MODE : USB [MONI] key : ON [MONI] VR : Center [MIC] VR : Center [AF] VR : MIN AG output : 1kHz/10mV Transmit	Power meter AF V.M Oscilloscope DM. SP AG AF V.M	Rear panel Front panel	ANT EXT. SP MIC	Front panel	Display	Check	0.2V ± 0.05V

ADJUSTMENT

Item	Condition	Measurement			Adjustment			Specifications/Remarks
		Test-equipment	Unit	Terminal	Unit	Parts	Method	
16. Processor check	1) Display f. : 14.200MHz MODE : USB [MIC] VR : Center [PROC] key : ON [METER] : COMP AG output : 1kHz/10mV	Power meter AG AF V.M	Rear panel Front panel	ANT MIC	Front panel	Display	Check	COMP meter : 15~25dB
	2) AG output : 1kHz/1mV							COMP meter : 1dot light
17. Sidetone check	1) Display f. : 14.200MHz MODE : CW [MONI] VR : Center Key down	AF V.M Oscilloscope DM. SP Electronic keyer jig	Rear panel	EXT. SP KEY			Check	0.63V ± 0.3V
18. CW break-in check	1) Display f. : 14.200MHz MODE : CW [VOX] key : ON [FULL/SEMI] key : FULL	Power meter Oscilloscope Electronic keyer jig	Rear panel	ANT KEY			Electronic keyer jig : Key down	Full break-in operation (When the key is turned OFF, the receive mode returns immediately.)
	2) [FULL/SEMI] key : SEMI [DELAY] knob : Center							Semi break-in operation (When the key is turned OFF, the receive mode returns after a while.)
19. DRU check (equipped on DRU-3)	1) Connect a microphone to the MIC jack. MODE : USB/LSB [MIC] VR : Center [REC] key : Push						Hold down the [CH1], and talk into the microphone.	Can be recorded for about 15 seconds.
							Release and press the [CH1] key again.	The recorded voice must be played back.
20 Sub tone check	1) Display f. : 29.100MHz MODE : FM MIC jack : 600Ω terminated [A=B], [TX-B] key : Push [M.IN] key : Push two times [RX-M.CH] : Push Transmit	Power meter Linear detector Oscilloscope f. counter Microphone	Rear panel Front panel	ANT MIC			Check	DEV : ±0.5~1.0kHz Tone f. : 88.2~88.7Hz
21. TX frequency check	1) Display f. : 29.100MHz MODE : CW Transmit							29.100.000MHz ± 145Hz
22. TX frequency characteristic check	1) Display f. : 14.200MHz MODE : USB/LSB MIC jack : Connect to AG AG output : 1kHz/5mV 400Hz/5mV 2.6kHz/5mV Transmit	Power meter Oscilloscope AG AF V.M	Rear panel Front panel	ANT MIC			a. Set AG to 1.0kHz and turn the [MIC] VR to set to 100W. b. Change the AG frequency and measure the difference between the power levels at 1.0kHz and at another frequency c. Take a measurement for each USB and LSB.	Within 6dB

ADJUSTMENT

Item	Condition	Measurement			Adjustment			Specifications/Remarks
		Test-equipment	Unit	Terminal	Unit	Parts	Method	
23. Processor check	1) Display f. : 14.200MHz MODE : USB [PROC] key : ON [METER] key : Push [PROC] VR : MIN MIC jack : Connect to AG AG output : 1.0kHz/1mV Transmit						Change [PROC] VR so that the first segment on the COMP meter lights.	
	2) AG output : 1.0kHz /10mV (20dB UP) Transmit						Check	COMP meter : within 15~25dB
24. AT	1) Display f. : Indicated below MODE : CW [METER] : SWR [THRU/AUTO] : AUTO Transmit After checked retuen to receive mode.	Through type power meter 150Ωdummy	Rear panel	ANT	Front panel	Display	Check	ON AIR LED light. AT TUNE LED light. When tuning completed, LEDs off.
	2) [AT TUNE] key : ON	Frequency 1.910MHz 3.500 3.700 7.000 10.100 14.000 18.100 21.000 24.900 29.700			AT	TC1	Note : When 29.700MHz and SWR 1.0 to 1.3, variiable capacitor has flutters so that it does not stop, adjust the TC1 at which SWR 1.2 or less is acceptable.	Begins AT tuning after entering the transmission state. This should stop within roughly 6 seconds. SWR : 1.2 or less Power : 70W or more

Adjustment Points

■ Side view

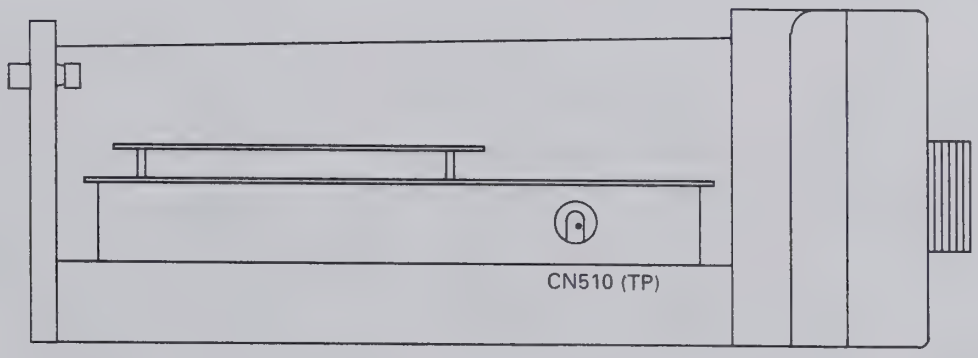

ADJUSTMENT

■ Upper view

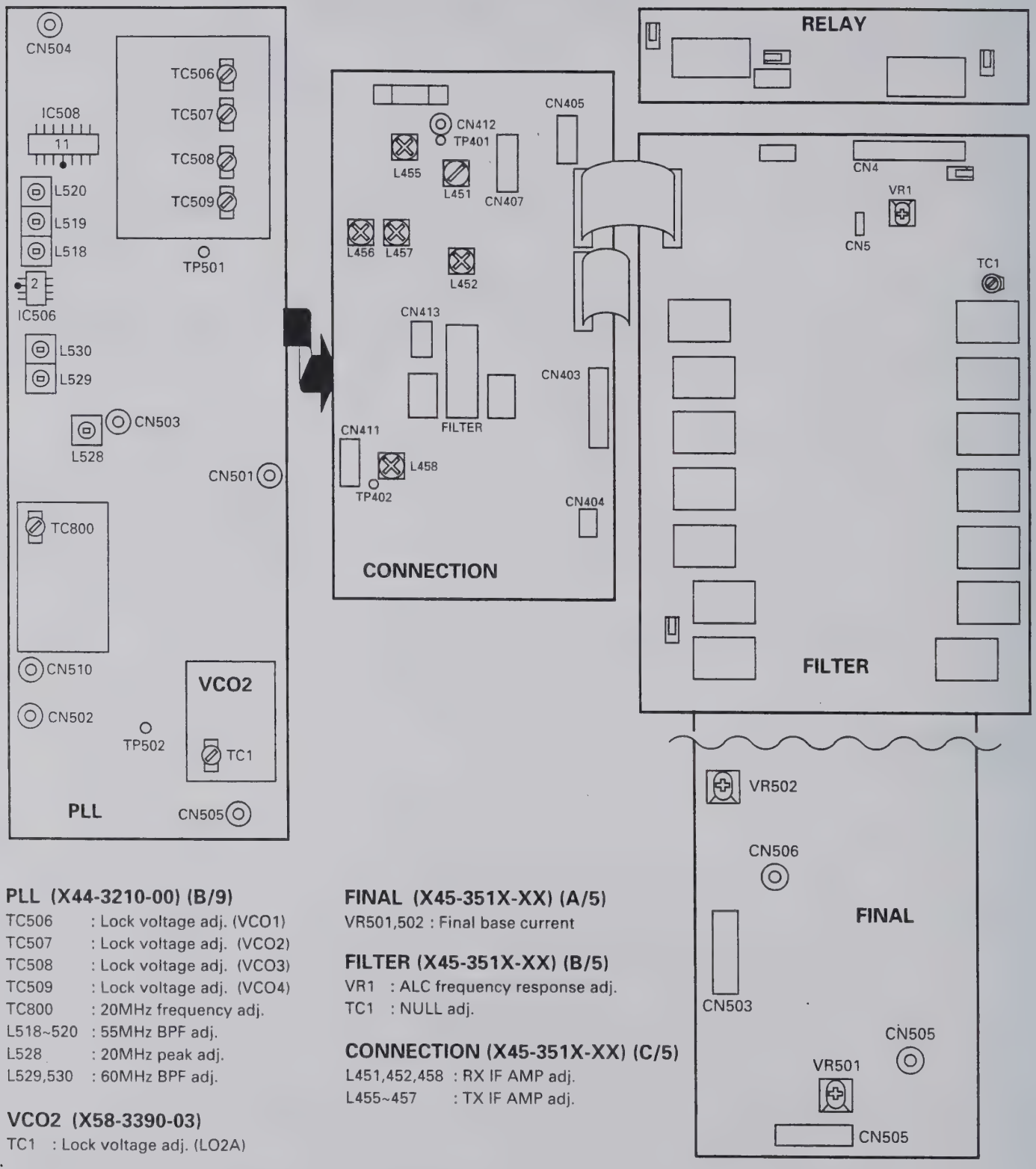

PLL (X44-3210-00) (B/9)

TC506 : Lock voltage adj. (VCO1)
TC507 : Lock voltage adj. (VCO2)
TC508 : Lock voltage adj. (VCO3)
TC509 : Lock voltage adj. (VCO4)
TC800 : 20MHz frequency adj.
L518~520 : 55MHz BPF adj.
L528 : 20MHz peak adj.
L529,530 : 60MHz BPF adj.

VCO2 (X58-3390-03)

TC1 : Lock voltage adj. (LO2A)

FINAL (X45-351X-XX) (A/5)

VR501,502 : Final base current

FILTER (X45-351X-XX) (B/5)

VR1 : ALC frequency response adj.
TC1 : NULL adj.

CONNECTION (X45-351X-XX) (C/5)

L451,452,458 : RX IF AMP adj.
L455~457 : TX IF AMP adj.

ADJUSTMENT

■ **Lower view**

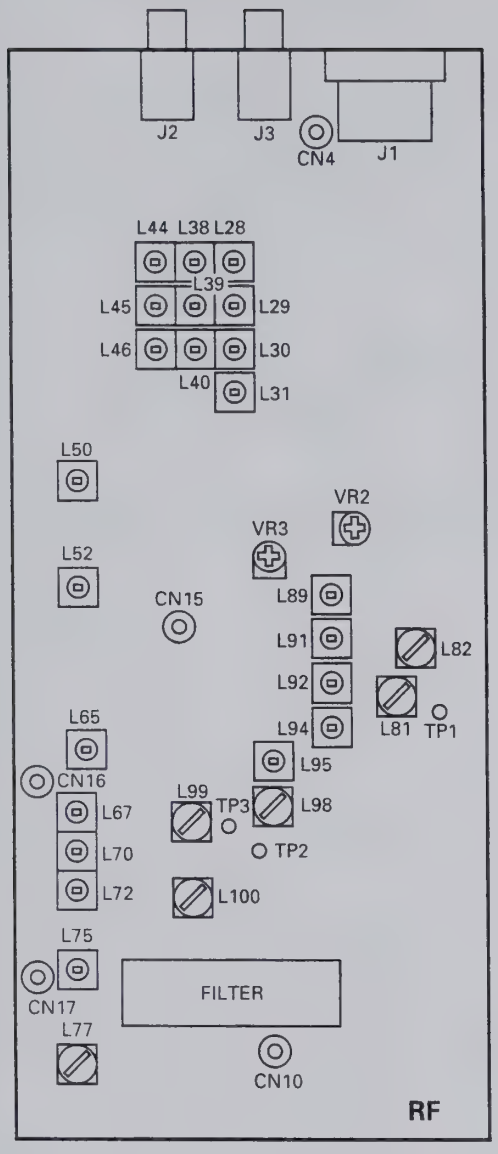

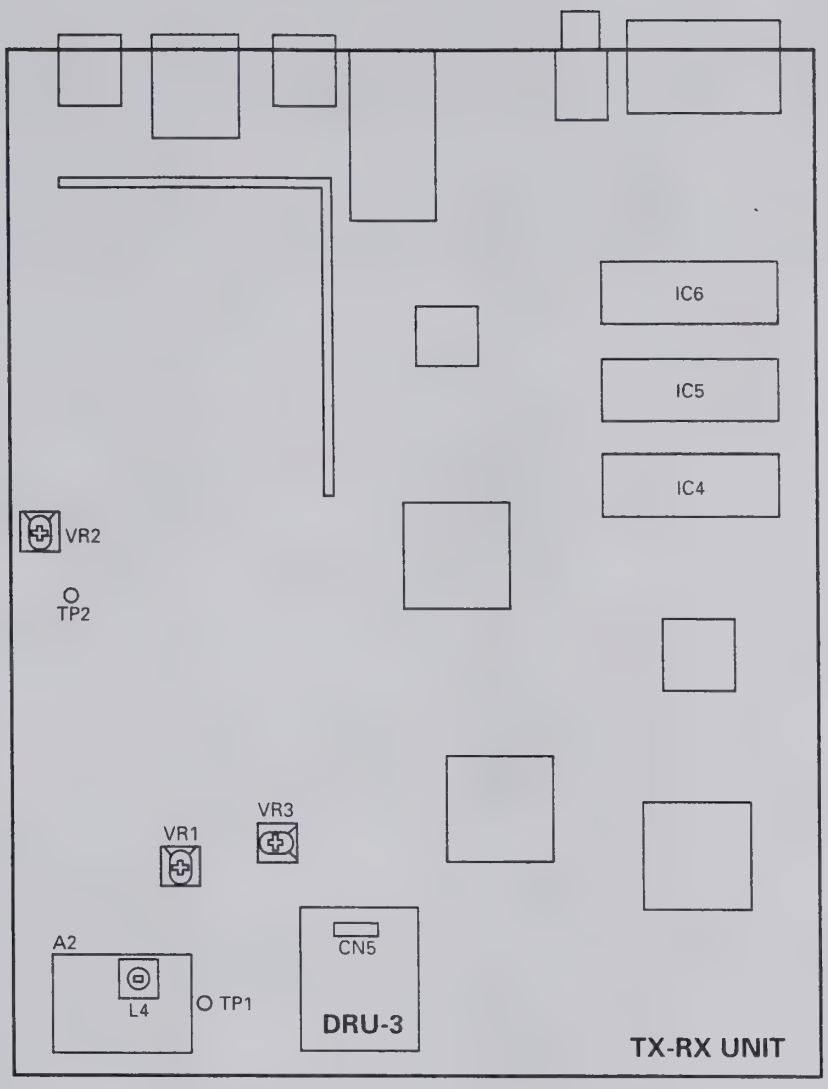

RF (X44-3210-00) (A/9)

VR2	: Spurious adj.
VR3,L89,91,92,94,95,98,99	: TX IF AMP adj.
L28~31,38~40,44~46,50,52	: BPF adj.
L65,67,70,72	: MCF adj.
L75,77	: RX IF AMP adj.
L81,82	: NB adj.
L100	: TX MCF adj.

TX-RX UNIT (X57-4620-00)

VR1	: S-meter adj.
VR2	: AGC voltage adj.
VR3	: DRU-3 recording level adj. (Adjusted to the mechanical center)
L4	: DSP PLL lock voltage adj.

TERMINAL FUNCTION

CN No.	Pin No.	Name	Function
RF UNIT (X44-3210-00) (A/9) : RF			
CN2	Coaxial	RAT	RX signal
CN4	Coaxial	DRV	TX drive signal
CN5	Coaxial	LO1	1st local oscillation 73.08~103.05MHz
CN6	Coaxial	LO2A	2nd local oscillation 64.22MHz
CN7	1	TXB	TX 8V
	2	RXB	RX 8V
	3	AGC	AGC voltage
CN10	Coaxial	TR88	RX IF output/TX IF input 8.83MHz
CN13	1	SPO	Speaker signal
	2	CKY	Keying signal
	3	AGC	AGC voltage
	4	TXC	TX : "H"
	5	RXC	RX : "H"
	6	8A	Analog 8V
	7	14S	14V-switched
	8	GND	GND
CN14	1	15K	Filter selection 15kHz
	2	3K	Filter selection 3kHz
	3	6K	Filter selection 6kHz
	4	VSF	Forward wave detection voltage
	5	VSF	Reflected wave detection voltage
	6	ALM	ALC meter output
	7	THP	Thermal protection
	8	NC	
	9	UCK2	RF serial/parallel convert clock
	10	UDA2	RF serial/parallel convert data
	11	ENR1	RF serial/parallel convertor IC1 enable
	12	ENR2	RF serial/parallel convertor IC2 enable
	13	ENR3	DAC enable
	14	NC	
	15	RBK	RF blank signal
	16	–6	–6V
	17	GND	GND
	18	NC	
	19	SS	TX/RX control signal TX : "L"
	20	NC	
J1	1	SPO	Speaker signal
	2	COM	Relay common terminal
	3	SS	TX/RX control signal
	4	MKE	TX relay close
	5	BRK	TX relay open
	6	ALC	ALC input
	7	RL	13V output when TX
J2		EXT RX	External receiver output
J3		IF OUT	SM-230
RF UNIT (X44-3210-00) (B/9) : PLL			
CN500	1	GND	GND
	2	NFMT	FM modulation on/off signal (FM TX : "L")
	3	VB3	21.489~30MHz } VCO select signal Active "H"
	4	VB2	14.489~21.489MHz
	5	VB1	7.489~14.489MHz
	6	VB0	0~7.489MHz
	7	UNL	Unlock detection output (Unlock : "H")
	8	GND	GND
	9	PLE2	PLL2 enable signal (LO2A)
	10	PLE1	PLL1 enable signal (LO1)
	11	PCK	Clock
	12	PDA	PLL, DDS data
	13	14D	14V
	14	DLE3	DDS3 enable signal (LO4)
	15	DLE2	DDS2 enable signal (LO3)
	16	DLE1	DDS1 enable signal (LO1)
	17	TXC	PLL DDS latch select signal (TX : "H")
	18	GND	GND
	19	9P	9V
	20	5P	5V
CN501	1	GND	GND
	2	LO4	DDS3 output
CN502	Coaxial	LO3	DDS2 output (8.375MHz)
CN503	Coaxial	REF	Reference signal output for TX-RX unit (20MHz)
CN504	Coaxial	LO1	LO1 output (73.08~103.05MHz)
CN505	Coaxial	LO2A	LO2A output (64.22MHz)
CN506	1	FMD	FM modulation signal
	2	GND	GND
	3	GND	GND
RF UNIT (X44-3210-00) (D/9) : PHONE			
CN901	1	SPI1	Phone jack through
	2	SPG	GND
	3	SPO1	Phone jack output
RF UNIT (X44-3210-00) (E, F, G, H, I/9) : VR			
CN903	1	DGND	Digital GND
	2	VPWR	MIC/PWR VR 1
	3	VMIC	MIC/PWR VR 2
	4	VDLY	CAR/DELAY VR 1
	5	VCAR	CAR/DELAY VR 2
	6	5D	5V
CN904	1	DGND	Digital GND
	2	VMON	PROC/MONI VR 1
	3	VPRC	PROC/MONI VR 2
	4	VKEY	AGC/KEY VR 1
	5	VAGC	AGC/KEY VR 2
	6	5D	5V
CN905	1	NC	
	2	WENB	Width encoder B
	3	WENA	Width encoder A
	4	SENB	Shift encoder B
	5	SENA	Shift encoder A
	6	GND	GND
CN906	1	GND	GND
	2	VRF	AF/RF VR 1
	3	VAF	AF/RF VR 2
	4	RENA	RIT encoder A
	5	RENB	RIT encoder B
	6	5D	5V
CN907	1	GND	GND
	2	VSQL	NB/SQL VR 1
	3	VNB	NB/SQL VR 2
	4	CENA	M.CH encoder A
	5	CENB	M.CH encoder B
	6	5D	5V
FINAL UNIT (X45-351X-XX) (A/5) : FINAL			
CN501	Coaxial	DRV	Drive input (From RF)
CN502	Coaxial	PO	TX signal output (To FILTER)
CN503	1	14S	13.8V
	2	14S	13.8V
	3	TXB	TX 13.8V
	4	GND	GND
	5	GND	GND
CN504	1	14V	13.8V
	2	14V	13.8V
	3	GND	GND

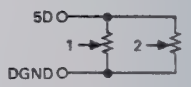

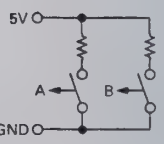

TERMINAL FUNCTION

CN No.	Pin No.	Name	Function
W501	Board	14F	Power supply 13.8V connecting harness
	in	14F	Power supply 13.8V connecting harness
		GND	Power supply 13.8V connecting harness
		GND	Power supply 13.8V connect ing harness
FIANL UNIT (X45-351X-XX) (B/5) : FILTER			
CN1	Coaxial	PO	Filter input signal
CN2	Coaxial	ATO	TX output signal (To AT)
CN3	1	8A	8V
	2	GND	GND
	3	GND	GND
	4	14S	14V
	5	14S	14V
	6	UCK2	Shift register clock
	7	UDA2	Shift register data
	8	ENF1	Shift register enable
	9	DGND	Digital GND
	10	TXB	TX power 8V
	11	VSF	Forward wave detection voltage
	12	VSR	Reflected wave detection voltage
CN4	1	ATA	Make for AT through/on relay
	2	28AT	24.5~30MHz
	3	25AT	21.5~24.5MHz
	4	18AT	18.5~21.5MHz
	5	14AT	14.5~18.5MHz
	6	10AT	10.5~14.5MHz
	7	7AT	4.0~7.5MHz
	8	4AT	2.5~4.0MHz
	9	GND	GND
	10	14S	14V
	11	GND	GND
W1	1	RL	TX/RX select signal output
	2	ANTS	ANT 1/2 select signal output
	3	GND	GND
FINAL UNIT (X45-351X-XX) (C/5) : CONNECTION			
CN401	1	15K	455kHz filter select "L" : Filter on
	2	3K	455kHz filter select "L" : Filter on
	3	6K	455kHz filter select "L" : Filter on
	4	TT	External AT tuning control (Pass through)
	5	TS	External AT tuning control (Pass through)
	6	UCK2	Pass through
	7	UDA2	Pass through
	8	ENF1	Pass through
	9	VSF	Pass through
	10	VSR	Pass through
	11	THP	Pass through
	12	14D	14V
	13	14D	14V
	14	14V	14V
	15	14V	14V
	16	PWS	Power switch on : "H"
	17	9P	PLL power 9V
	18	5P	PLL power 5V
	19	–6	–6V output
	20	GND	GND
CN402	1	8A	8V
	2	GND	GND
	3	GND	GND
	4	14S	13.8V
	5	14S	13.8V
	6	UCK2	Pass through
	7	UDA2	Pass through
	8	ENF1	Pass through
	9	DGND	Digital GND
	10	TXB	TX power 8V
	11	VSF	Pass through
	12	VSR	Pass through
CN403	1	14A	13.8V
	2	14S	13.8V
	3	8D	Digital 8V
	4	8A	Analog 8V
	5	APG	GND
	6	SPO3	Speaker output signal input
	7	SPG	Speaker GND
CN404	1	SPG	Speaker GND
	2	SP	Speaker output signal
CN405	1	14S	13.8V
	2	14S	13.8V
	3	AGND	Analog GND
	4	AGND	Analog GND
CN406	1	THP	Pass through
	2	TXB	Pass through
	3	14D	13.8V
	4	8D	Digital 8V
	5	14D	13.8V
	6	8A	Analog 8V
	7	GND	GND
	8	GND	GND
	9	14S	13.8V
	10	14S	13.8V
	11	14S	13.8V
	12	PSW	Power switch on : "H"
	13	14V	13.8V
CN407	1	14S	13.8V
	2	AGND	Analog GND
	3	TT	Pass through
	4	TS	Pass through
	5	GND	GND
CN410	Coaxial	LO3	Local LO3 8.375MHz (From PLL)
CN411	1	TIF	TX IF input
	2	GND	GND
	3	RIF	RX IF output
	4	GND	GND
CN412	Coaxial	TR88	8.83MHz
CN413	1	TXB	TX power 8V
	2	RXB	RX power 8V
	3	AGC	AGC line
FINAL UNIT (X45-351X-XX) (D/5) : AVR			
CN601	1	14V	13.8V
	2	14V	13.8V
	3	GND	GND
CN602	1	14S	13 8V
	2	14S	13.8V
	3	AGND	Analog GND
	4	AGND	Analog GND
CN603	1	THP	Thermal protection on : "H"
	2	TXB	TX 13.8V
	3	14D	13.8V
	4	8D	Digital 8V
	5	14D	Digital 13.8V
	6	8A	Analog 8V
	7	GND	GND
	8	GND	GND
	9	14S	13.8V
	10	14S	13.8V

AT coil tap band data

TERMINAL FUNCTION

CN No.	Pin No.	Name	Function
	11	14S	13.8V
	12	PSW	Power switch on : "H"
	13	14V	13.8V
CN604	1	14S	13.8V
	2	14S	13.8V
	3	TXB	TX 13.8V
	4	GND	GND
	5	GND	GND
CN605	1	MOT+	Moter drive +
	2	MOT –	Motor drive –
FINAL UNIT (X45-351X-XX) (E/5) : RELAY			
CN301	1	RL	TX/RX select signal input
	2	ANTS	ANT 1/2 select signal input
	3	GND	GND
CN302	Coaxial	ATO	TX signal input (From FILTER)
CN303	Coaxial	RAT	RX signal output (To RF)
CN304	Coaxial	AT1	Input/output to AT (RX : Output, TX : Input)
CN305	Coaxial	AT2	Input/output to AT (RX : Input, TX : Output)
CN306	TP		ANT1 GND
CN307	TP		ANT2 GND
W301	TP		ANT1 signal line
W303	TP		ANT2 signal line
AT UNIT (X53-3340-02)			
CN1	Coaxial	AT1	AT input
CN2	Coaxial	AT2	AT output
CN3	1	VRE	+5V reference voltage for A/D
	2	POD2	VC2 position detection, VR101 output
	3	GND	GND
	4	POD1	VC1 position detection, VR102 output
CN4	1	NC	
	2	M2–	Motor 2 drive –
	3	M2+	Motor 2 drive +
	4	M1–	Motor 1 drive –
	5	M1+	Motor 1 drive +
CN5	1	NC	
	2	F15	Power line 11~14V
	3	GND	GND
CN6	1	ATA	Make for AT through/on relay "L" : On
	2	NC	
CN7	1	ATG	GND for discriminating that is connected to microcomputer
	2	SPED	Motor speed control pulse
	3	APRE	Control selection "H" : Preset type, "L" : Auto tuning type
	4	VRE	+5V reference voltage for A/D
	5	PR22	Motor 2 control signal
	6	PR21	Motor 2 control signal
	7	POD2	VC2 position detection
	8	PR12	Motor 1 control signal
	9	PR11	Motor 1 control signal
	10	POD1	VC1 position detection
	11	GND	GND
CN101	1	28AT	24.5~30MHz
	2	15AT	21.5~24.5MHz
	3	NC	
	4	18AT	18.5~21.5MHz
	5	14AT	14.5~18.5MHz
	6	10AT	10.5~14.5MHz
	7	7AT	4.0~7.5MHz
	8	4AT	2.5~4.0MHz

AT coil tap band data

CN No.	Pin No.	Name	Function
	9	GND	GND
CONTROL UNIT (X53-356X-XX) (A/4) : CONTROL			
CN1	1	GND	GND
	2	NFMT	Not FM TX signal
	3	VB3	VCO selest signal
	4	VB2	VCO select signal
	5	VB1	VCO select signal
	6	VB0	VCO select signal
	7	UNL	PLL unlock signal
	8	GND	GND
	9	PLE2	PLL2 enable signal
	10	PLE1	PLL1 enable signal
	11	PCK	PLL serial clock
	12	PDA	PLL serial data
	13	14D	Digital 13.8V
	14	DLE3	DDS3 enable signal
	15	DLE2	DDS2 enable signal
	16	DLE1	DDS1 enable signal
	17	TXC	TX control signal
	18	GND	GND
	19	9P	PLL power 9V (Pass through)
	20	5P	PLL power 5V (Pass through)
CN2	1	GND	GND
	2	–6	–6V (Pass through)
	3	5P	PLL power 5V (Pass through)
	4	9P	PLL power 9V (Pass through)
	5	PSW	Power control signal
	6	14V	13.8V
	7	14V	13.8V
	8	14D	Digital 13.8V
	9	14D	Digital 13.8V
	10	THP	Thermal protection
	11	VSR	Reflected wave analog voltage
	12	VSF	Forward wave analog voltage
	13	ENF1	Enable for IC1 on FILTER board
	14	UDA2	Serial data for IC1 on FILTER board
	15	UCK2	Serial clock for IC1 on FILTER board
	16	TS	AT-300 control signal
	17	TT	AT-300 control signal
	18	6K	6kHz filter select signal
	19	3K	3kHz filter select signal
	20	15K	15kHz filter select signal
CN3	1	5D	Digital 5V
	2	MENA	Main encoder pulse A
	3	MENB	Main encoder pulse B
	4	DGND	Digital GND
CN4	1	NC	
	2	NC	
	3	SPED	Internal AT speed control signal
	4	APRE	Internal AT control select signal
	5	VRE	Reference voltage for A/D convertor
	6	PR22	Motor 2 control signal
	7	PR21	Motor 2 control signal
	8	POD2	Motor 2 position voltage
	9	PR12	Motor 1 control signal
	10	PR11	Motor 1 control signal
	11	POD1	Motor 1 position voltage
	12	GND	GND
CN5	1	GND	GND
	2	CTS	Communication inhibit signal from TS-870S
	3	RTS	Communication inhibit signal from personal computer
	4	RXD	TX data from TS-870S
	5	TXD	RX data from personal computer

TERMINAL FUNCTION

CN No.	Pin No.	Name	Function
	6	KEYS	Key jack sensing signal
	7	DASH	Electronic keyer dash signal
	8	DOT	Electronic keyer dot signal
	9	GND	GND
	10	H0	DSP control data bus
	11	H1	DSP control data bus
	12	H2	DSP control data bus
	13	H3	DSP control data bus
	14	H4	DSP control data bus
	15	H5	DSP control data bus
	16	H6	DSP control data bus
	17	H7	DSP control data bus
	18	HENA	DSP A enable signal
	19	HENB	DSP B enable signal
	20	HRW	DSP read/write control signal
CN6	1	GND	GND
	2	HA0	DSP control address bus
	3	HA1	DSP control address bus
	4	HA2	DSP control address bus
	5	GND	GND
	6	BEEP	Beep control signal
	7	MD	Microphone down signal
	8	MU	Microphone up signal
	9	SS	Standby switch
	10	GND	GND
	11	KEY	Key down signal
	12	DRST	DSP reset signal
	13	CKY	TX wave control signal
	14	RXC	RX control signal
	15	TXC	TX control signal
	16	AMUT	AF mute signal
	17	VCEN	TX-RX unit IC26 enable
	18	UCK2	TX-RX unit serial clock
	19	UDA2	TX-RX unit serial data
	20	DREN	DRU-3 control enable signal
	21	PLUL	TX-RX unit PLL unlock signal
	22	PLEN	TX-RX unit PLL control enable signal
	23	EOM	DRU-3 end of message
	24	VBSY	VS-2 busy signal
	25	STR	VS-2 synthesize control signal
	26	GND	GND
CN7	1	5D	Digital 5V
	2	VAGC	AGC VR analog voltage
	3	VKEY	KEY VR analog voltage
	4	VPRC	PROC VR analog voltage
	5	VMON	MONI VR analog voltage
	6	DGND	Digital GND
	7	NC	
	8	5D	Digital 5V
	9	VCAR	CAR VR analog voltage
	10	VDLY	DELAY VR analog voltage
	11	VMIC	MIC VR analog voltage
	12	VPWR	PWR VR analog voltage
	13	DGND	Digital GND
CN8	1	5D	Digital 5V
	2	14D	Digital 13.8V
	3	14D	Digital 13.8V
	4	ENL2	LCD driver control enable signal
	5	ENL3	LCD driver control enable signal
	6	UDA1	LCD driver control serial data
	7	UCK1	LCD driver control serial clock
	8	BLANK	LCD goes off control signal
	9	DIM	LCD dimmer control signal
	10	GND	GND

CN No.	Pin No.	Name	Function
CN9	1	BLNK	LED goes off control signal
	2	K0	Key input 0
	3	K1	Key input 1
	4	K2	Key input 2
	5	K3	Key input 3
	6	K4	Key input 4
	7	K5	Key input 5
	8	K6	key input 6
	9	K7	Key input 7
	10	PSW	Power switch input signal
	11	ENL4	Enable for IC501 on SW board
	12	ENL1	Enable for IC502~504 on SW board
	13	UDA1	Serial data for SW board
	14	UCK1	Serial clock for SW board
	15	LATC	AT tune LED control signal
	16	TXC	TX control signal (TX LED control)
	17	RES	IC501~504 reset signal
	18	5V	5V
	19	5D	Digital 5V
	20	DGND	Digital GND
CN10	1	NC	
	2	WENB	Width encoder pulse B
	3	WEBA	Width encoder pulse A
	4	SENB	Shift encoder pulse B
	5	SENA	Shift encoder pulse A
	6	GND	GND
	7	NC	
	8	5D	Digital 5V
	9	RENB	RIT encoder pulse B
	10	RENA	RIT encoder pulse A
	11	VAF	AF VR analog voltage
	12	VRF	RF VR analog voltage
	13	GND	GND
	14	NC	
	15	5D	Digital 5V
	16	CENB	Click encoder pulse B
	17	CENA	Click encoder pulse A
	18	VNB	NB VR analog voltage
	19	VSQL	SQL VR analog voltage
	20	GND	GND
CN11	1	NC	
	2	SS	Standby switch
	3	NC	
	4	GND	GND
	5	–6	–6V
	6	RBK	RF mute signal
	7	NC	
	8	ENR3	Enable for IC7 on RF board
	9	ENR2	Enable for IC2 on RF board
	10	ENR1	Enable for IC1 on RF board
	11	UDA2	Serial data for RF board.
	12	UCK2	Serial clock for RF board
	13	NC	
	14	THP	Thermal protection
	15	ALM	ALC meter analog voltage
	16	VSR	Reflected wave analog voltage
	17	VSF	Forward wave analog voltage
	18	6K	6kHz filter select signal
	19	3K	3kHz filter select signal
	20	15K	15kHz filter select signal
CONTROL UNIT (X53-356X-XX) (B/4) : SW			
CN501	1	DGND	Digital GND
	2	5D	Digital 5V

TERMINAL FUNCTION

CN No.	Pin No.	Name	Function
	3	5V	5V
	4	RES	IC501~504 reset signal
	5	TXC	TX control signal (TX LED control)
	6	LATC	AT tune LED control signal
	7	UCK1	Serial clock
	8	UDA1	Serial data
	9	ENL1	IC502~504 enable
	10	ENL4	IC501 enalbe
	11	PSW	Power switch output signal
	12	K7	Key output 7
	13	K6	Key output 6
	14	K5	Key output 5
	15	K4	Key output 4
	16	K3	Key output 3
	17	K2	Key output 2
	18	K1	Key output 1
	19	K0	Key output 0
	20	BLNK	LED goes off control signal
CONTROL UNIT (X53-356X-XX) (D/4) : MIC			
CN902	1	SS	Standby switch
	2	MD	Microphone down signal
	3	MU	Microphone up signal
	4	8M	8V for microphone
	5	MCG	GND
	6	MSG	MIC GND
	7	MIC	Microphone signal output
TX-RX UNIT (X57-4620-00)			
CN1	1	TIF	TX IF output (455kHz)
	2	GND	TIF GND
	3	RIF	RX IF input (455kHz)
	4	GND	RIF GND
CN3	1	LO4	Local 4 input (466kHz)
	2	GND	LO4 GND
	3	FMD	FM modulation output (To PLL)
	4	GND	FMD GND
CN4	1	MIC	Microphone signal input
	2	MSG	MIC GND
	3	MCG	GND
	4	SS	Microphone standby switch
	5	MU	Microphone up
	6	MD	Microphone down
	7	8M	8V for microphone
CN5	1	GND	GND
	2	DRMG	MIC GND
	3	DRM	Microphone signal output
	4	DRO	DRU-3 playback signal input
	5	5D	Digital 5V for DRU-3
	6	GND	GND
	7	EOM	End of message (End : "H")
	8	OVF	Over flow signal (Over flow : "L")
	9	DREN	DRU-3 enable
	10	SD	DRU-3 serial data
	11	SCK	DRU-3 clock
CN6	1	VO	Audio signal
	2	GND	GND
	3	SD	VS-2 control data
	4	SCK	VS-2 control data clock
	5	BSY	VS-2 busy
	6	STR	VS-2 synthesize control
	7	5C	5V for VS-2
	8	GND	GND
CN7	1	GND	GND

CN No.	Pin No.	Name	Function
	2	HA0	DSP data address
	3	HA1	DSP data address
	4	HA2	DSP data address
	5	GND	GND
	6	BEEP	Beep control signal
	7	MD	Microphone down signal
	8	MU	Microphone up signal
	9	SS	Standby switch
	10	GND	GND
	11	KEY	Key down signal
	12	DRST	DSP reset signal
	13	CKY	TX wave control signal
	14	RXC	RX control signal
	15	TXC	TX control signal
	16	AMUT	AF mute signal
	17	VCEN	IC26 enable
	18	UCK2	Serial clock for TX-RX unit
	19	UDA2	Serial data for TX-RX unit
	20	DREN	DRU-3 enable
	21	PLUL	TX-RX unit PLL unlock signal output
	22	PLEN	TX-RX unit PLL enable
	23	EOM	DRU-3 end of message signal output
	24	VBSY	VS-2 busy signal
	25	STR	VS-2 synthesize control signal
	26	GND	GND
CN8	1	GND	GND
	2	CTS	TX inhibit signal from TS-870S
	3	RTS	TX inhibit signal from personal computer
	4	RXD	TX data from TS-870S
	5	TXD	RX data from personal computer
	6	KEYS	Key jack sensing signal
	7	DASH	Electronic keyer dash signal
	8	DOT	Electronic keyer dot signal
	9	GND	GND
	10	H0	DSP data bus
	11	H1	DSP data bus
	12	H2	DSP data bus
	13	H3	DSP data bus
	14	H4	DSP data bus
	15	H5	DSP data bus
	16	H6	DSP data bus
	17	H7	DSP data bus
	18	HENA	DSP A enable signal
	19	HENB	DSP B enable signal
	20	HRW	DSP read/write control signal
CN9	1	14A	Analog 13.8V
	2	8D	Digital 8V
	3	14S	13.8V
	4	8A	Analog 8V
	5	APG	GND
CN10	1	SPI1	AF input when headphone through
	2	SPG	GND
	3	SPO1	Headphone AF output
CN11	1	GND	GND
	2	14S	13.8V
	3	8A	Analog 8V
	4	RXC	RX : "L"
	5	TXC	TX : "H"
	6	AGC	AGC voltage
	7	CKY	Keying signal
	8	SPO1	Speaker signal output
CN12	1	SPO3	Internal speaker AF output
	2	SPG	GND

TERMINAL FUNCTION

CN No.	Pin No.	Name	Function
CN13	Coaxial	REF	20MHz reference signal for PLL, DPS (From PLL)
J1	1	GND	GND
EXT.SP	2	NC	
	3	NC	
	4		External speaker signal output
	5		Signal input when external speaker not connected
J2	1	GND	GND
Paddle	2	NC	
	3	NC	
	4	NC	
	5	DASH	Electronic keyer dash signal
	6	DOT	Electronic keyer dot signal
	7	NC	
	8	NC	
	9	NC	
	10	KEYS	Key switch signal
	11	KEYS	Open when using paddle
J4	1		GND
RTTY	2		RTTY signal
	3		GND
	4		RTTY signal
J5	1	NC	
ACC2	2	NC	
	3	ANO	RX audio output
	4	GND	ANO GND
	5	PSQ	Squelch open : GND, Squelch close : open
	6	SMET	S-meter voltage output
	7	NC	
	8	GND	GND
	9	PKS	Standby switch when using PKD input (Front panel microphone input is muted)
	10	NC	
	11	PKD	TX input
	12	GND	PKD GND
	13	SS	Standby switch

CN No.	Pin No.	Name	Function
J6	1	GND	GND
KEY	2	GND	GND
	3	KEYS	Key jack sensing signal
	4	NC	
	5	KEY	Key down signal
J7	1	GND	GND
COM	2	NC	
	3	TXD	RX data from personal computer
	4	RXD	TX data from TS-870S
	5	NC	
	6	NC	
	7	CTS	TX inhibit signal from TS-870S
	8	RTS	TX inhibit signal from personal computer
	9	NC	
LCD ASSY (B38-0736-05)			
CN1	1	GND	GND
	2	DIM	LCD dimmer control signal
	3	BLANK	LCD goes off control signal
	4	UCK1	LCD driver control serial clock
	5	UDA1	LCD driver control serial data
	6	ENL3	LCD driver control enable signal
	7	ENL2	LCD driver control enable signal
	8	14D	Digital 13.8V
	9	14D	Digital 13.8V
	10	5D	Digital 5V

TS-870S PC BOARD VIEWS

LCD ASSY (B38-0736-05)
Component side view

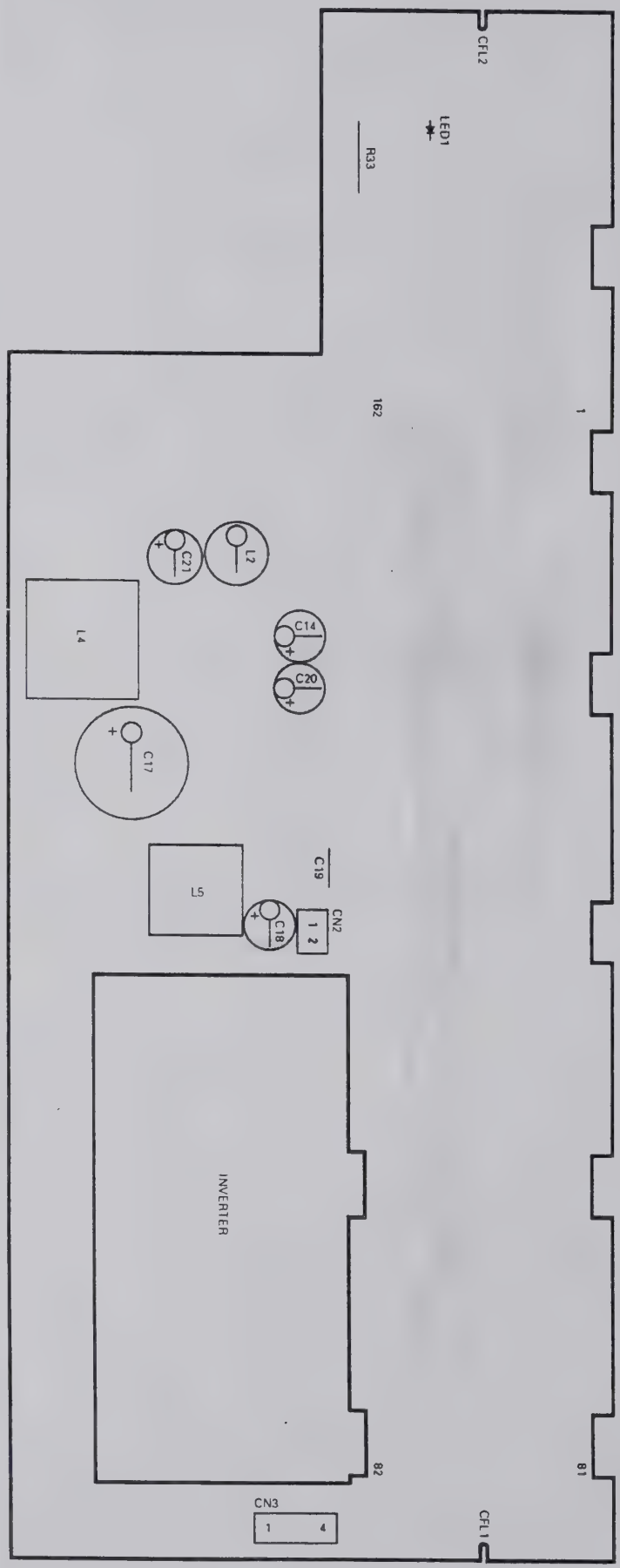

LCD ASSY (B38-0736-05)
Foil side view

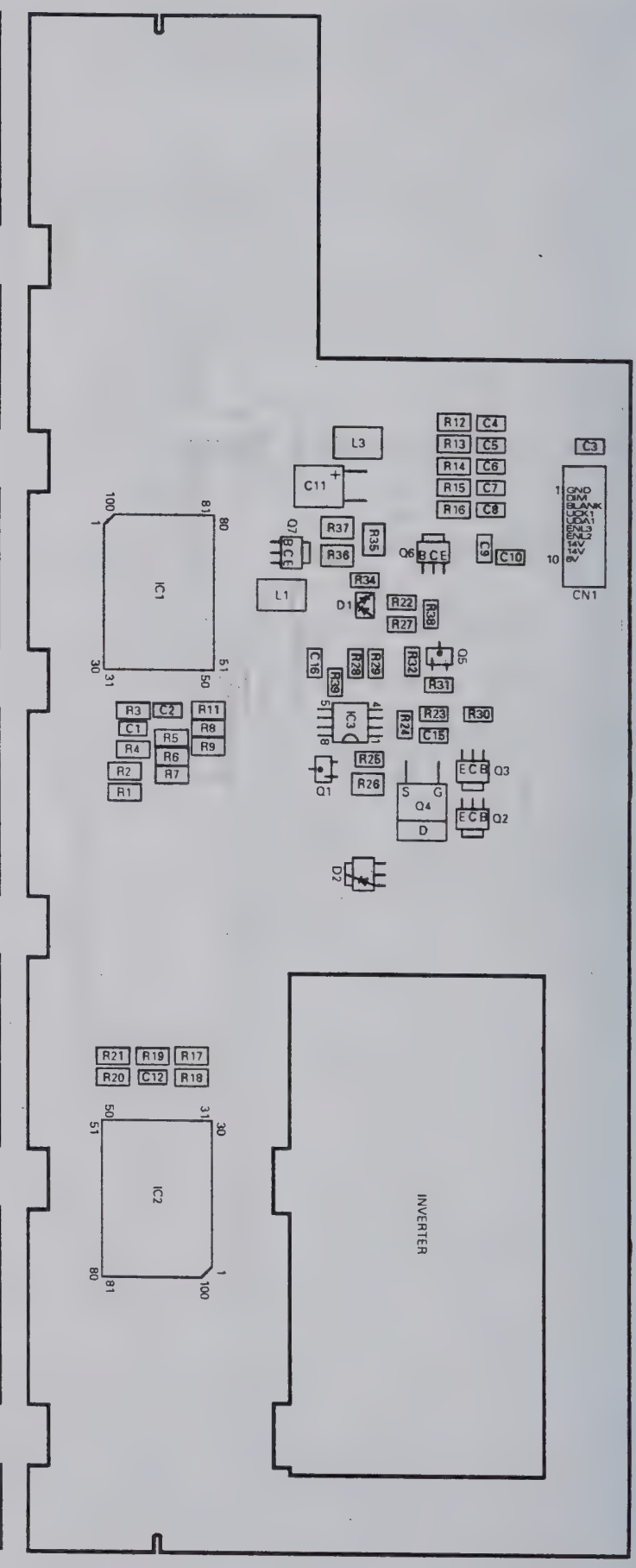

RF UNIT (X44-3210-00) (C/9)
Component side view

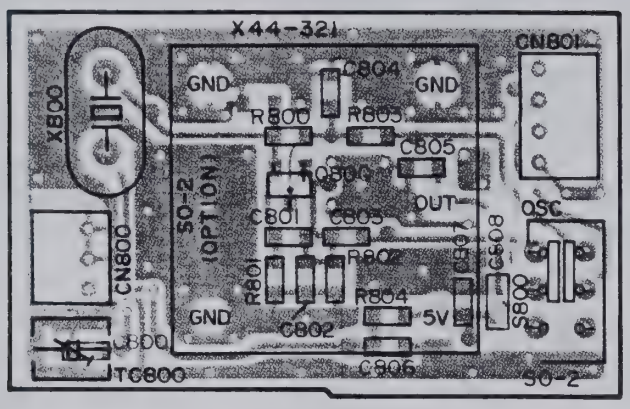

RF UNIT (X44-3210-00) (C/9)
Foil side view

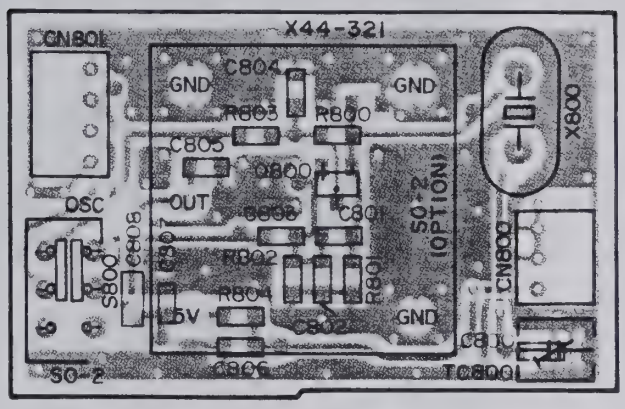

Component side
Foil side

VCO2 (X58-3390-03)
Component side view

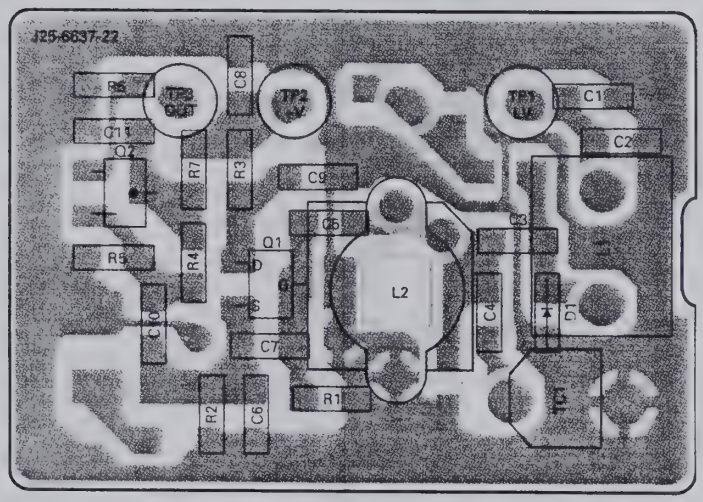

VCO2 (X58-3390-03)
Foil side view

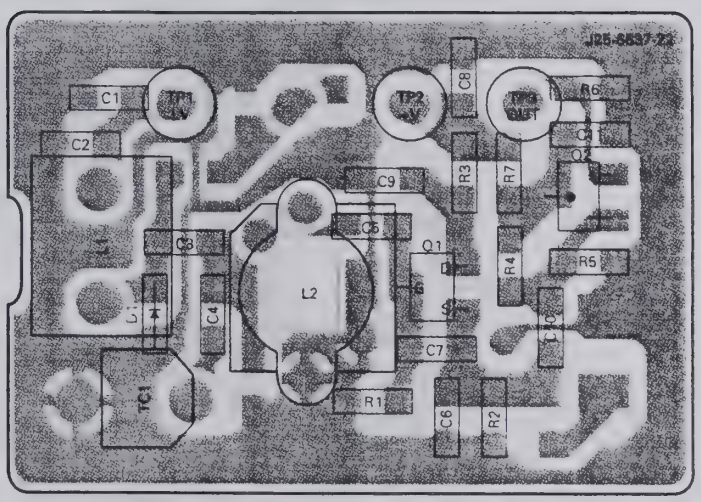

FINAL UNIT (X45-351X-XX) (A/5) : FINAL

Component side view

0-00 : K,P,M,M2,X
2-71 : E,E2,E3,E9

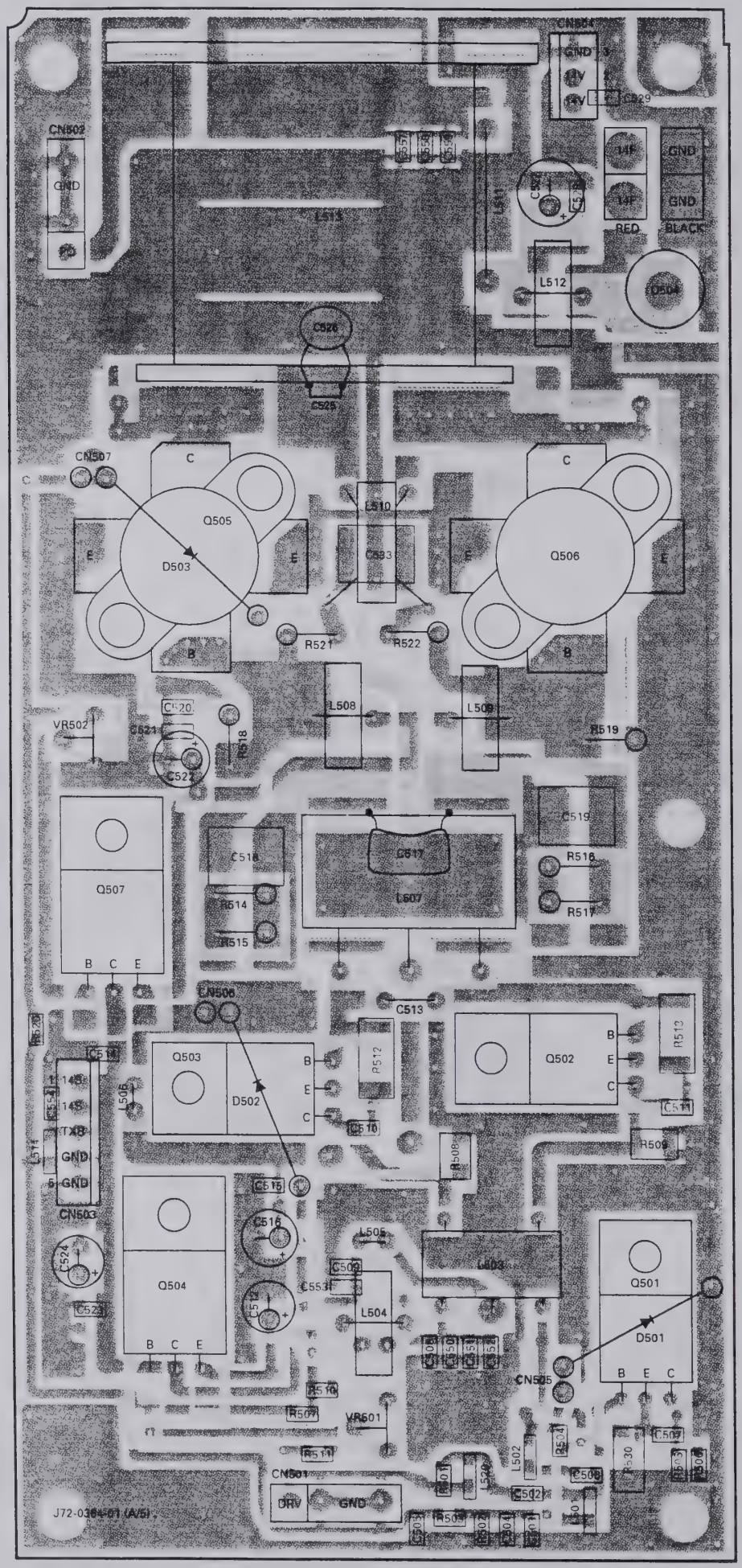

Component side
Foil side

FINAL UNIT (X45-351X-XX) (A/5) : FINAL

Foil side view

0-00 : K,P,M,M2,X

2-71 : E,E2,E3,E9

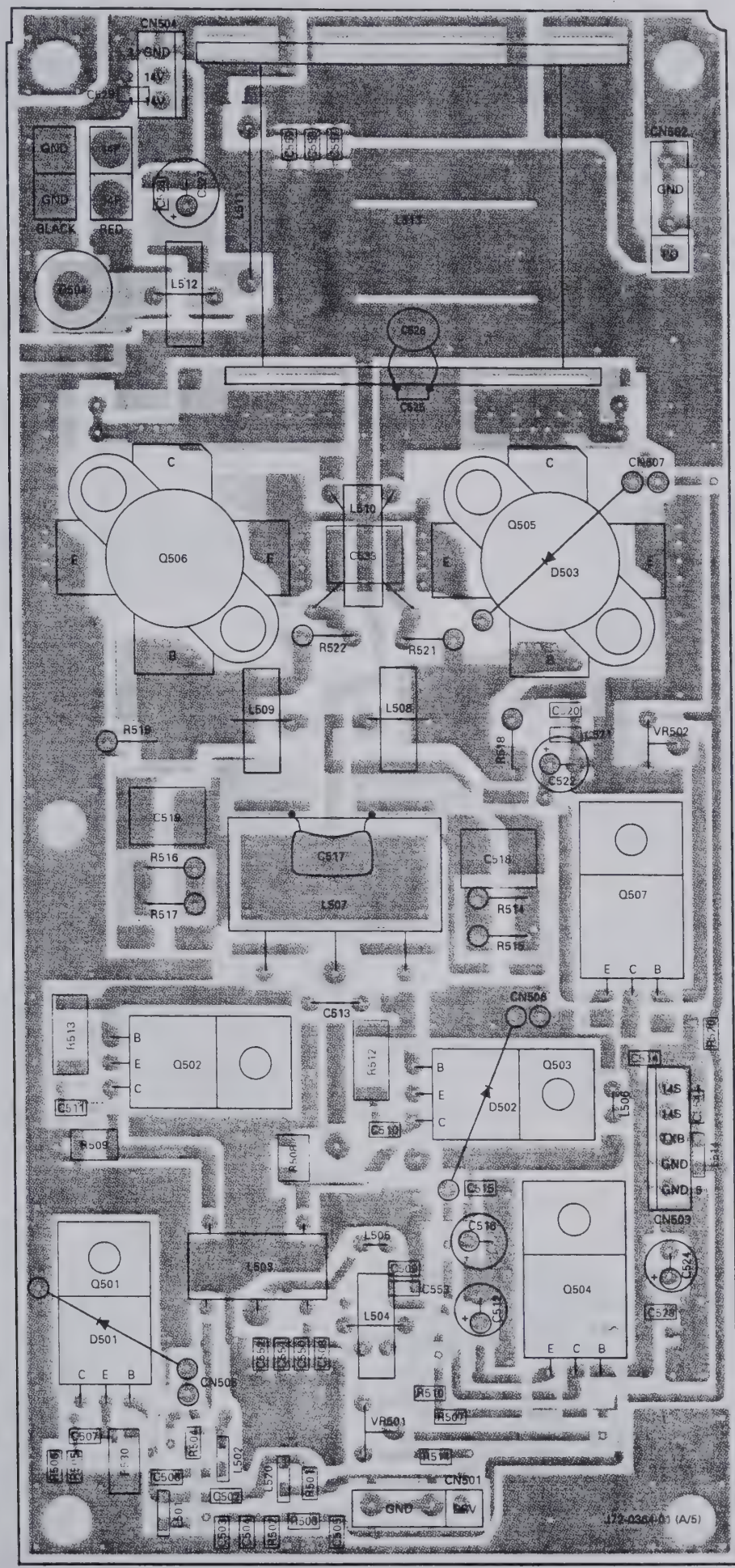

Component side

Foil side

TS-870S PC BOARD VIEW

FINAL UNIT (X45-351X-XX) (B/5) : FILTER

Component side

Foil side

Component side view **0-00 : K,P,M,M2,X** **2-71 : E,E2,E3,E9**

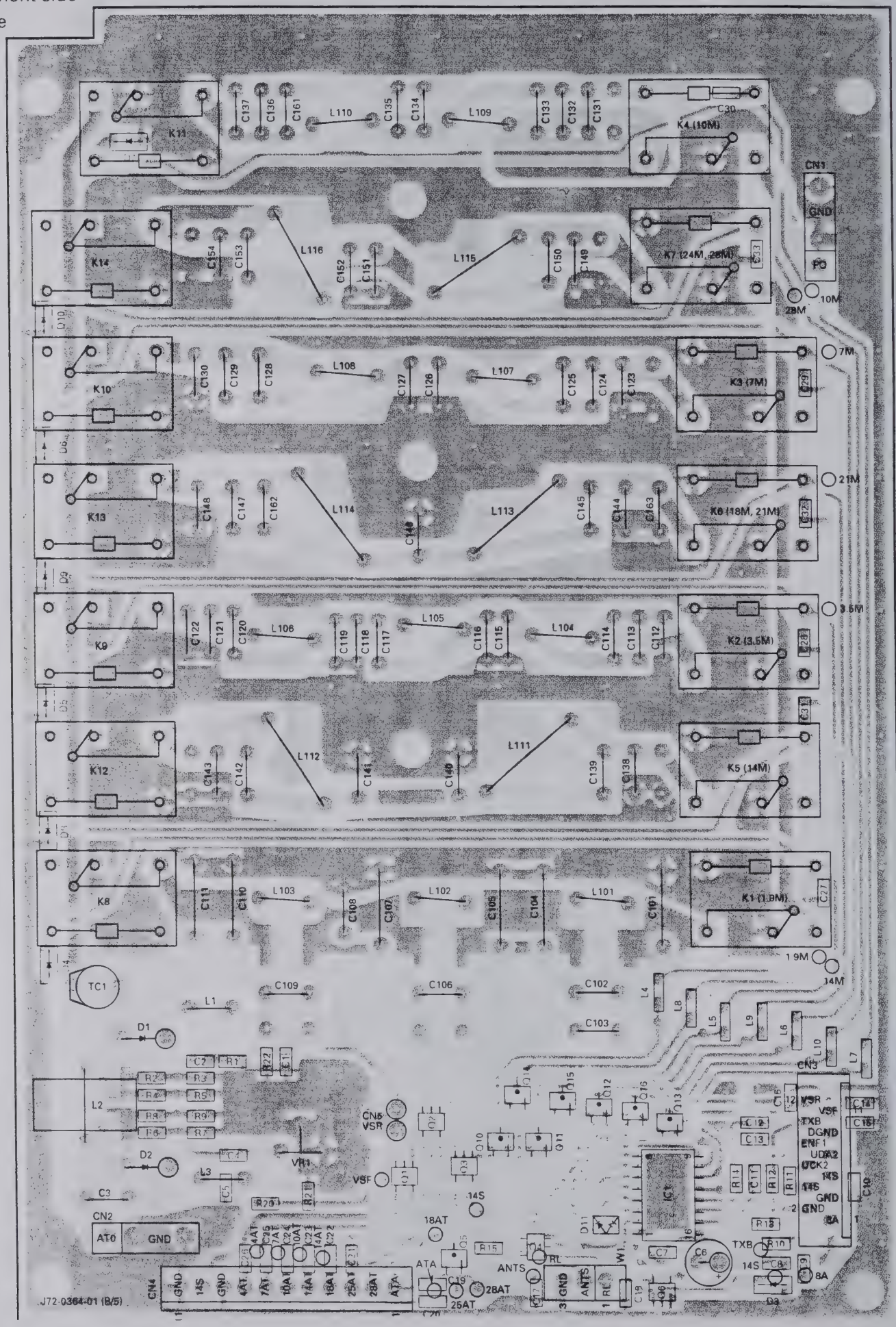

PC BOARD VIEW TS-870S

Component side
Foil side

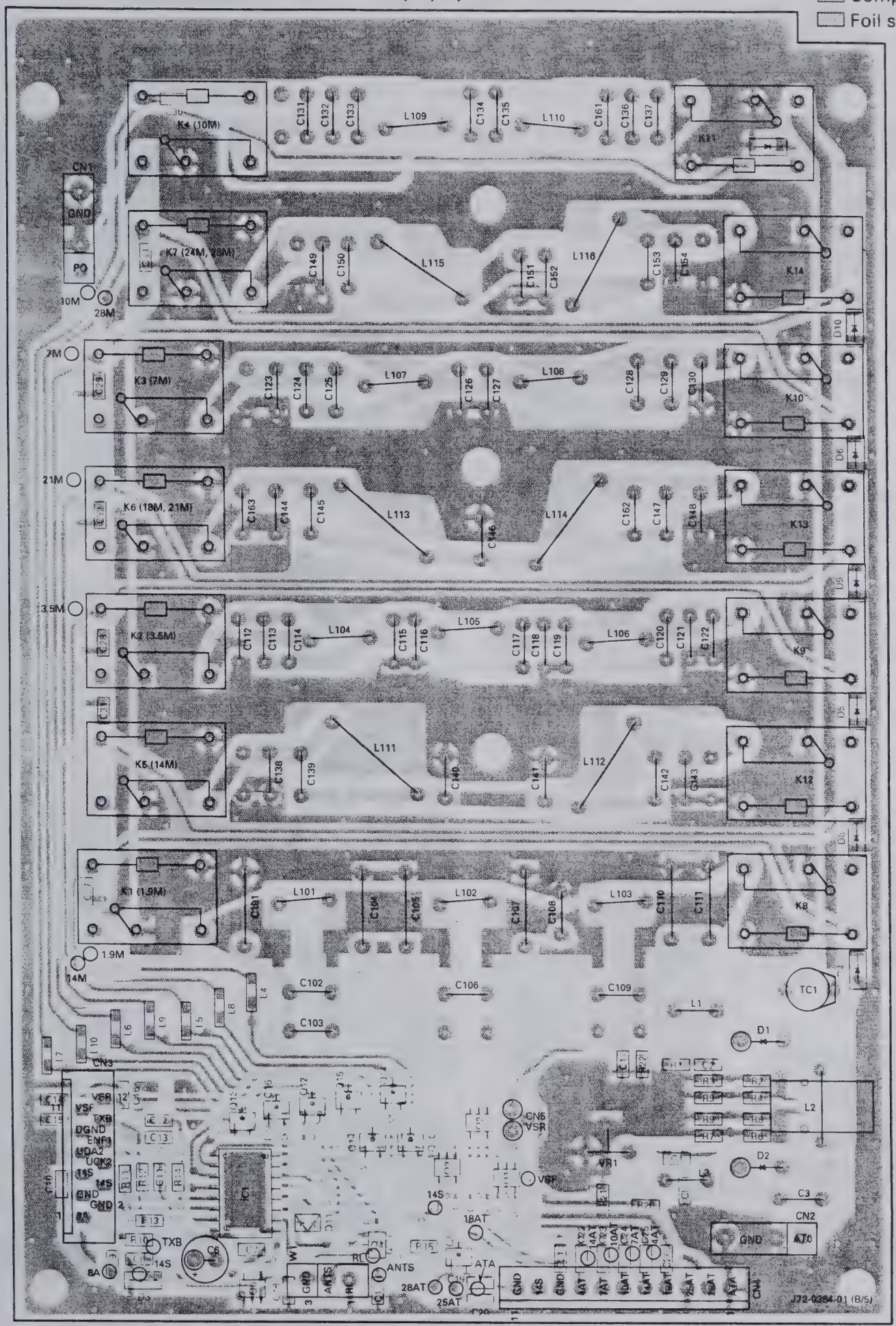

PC BOARD VIEWS

FINAL UNIT
(X45-351X-XX) (D/5) : AVR
Component side view
0-00 : K,P,M,M2,X
2-71 : E,E2,E3,E9

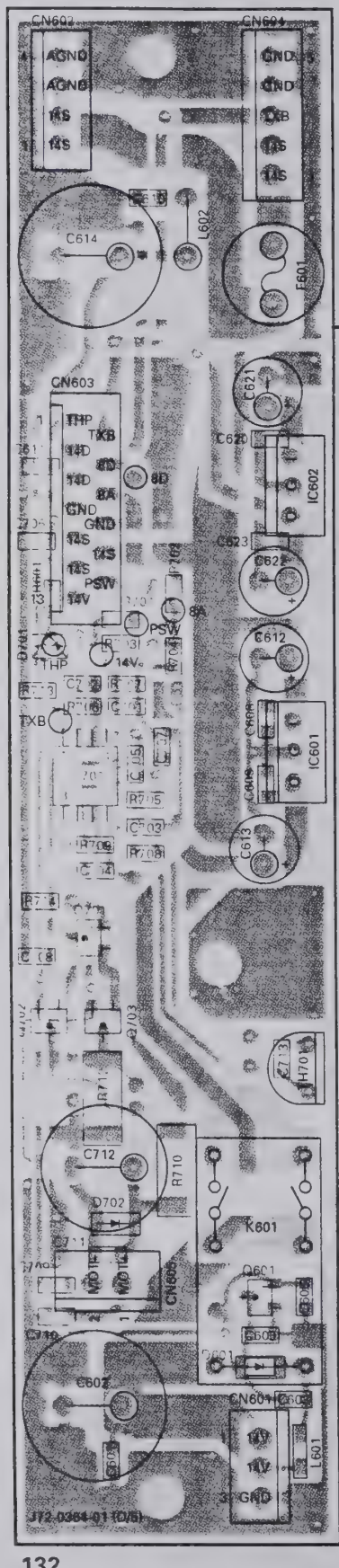

FINAL UNIT
(X45-351X-XX) (E/5)
: RELAY
Component side view
0-00 : K,P,M,M2,X
2-71 : E,E2,E3,E9

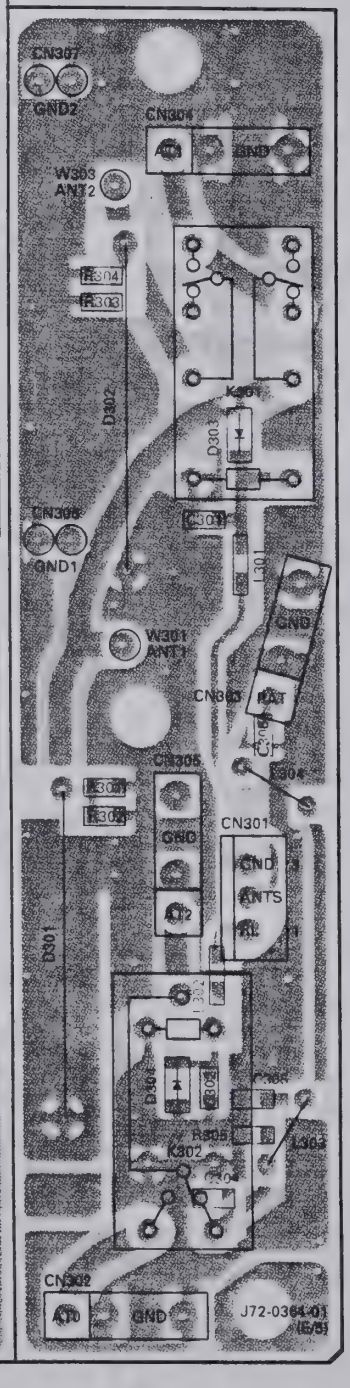

FINAL UNIT
(X45-351X-XX) (E/5)
: RELAY
Foil side view
0-00 : K,P,M,M2,X
2-71 : E,E2,E3,E9

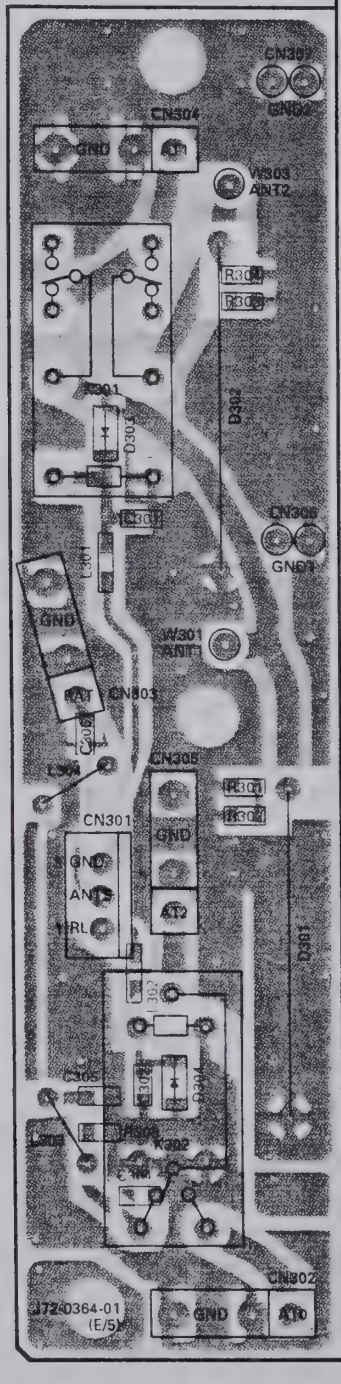

FINAL UNIT
(X45-351X-XX) (D/5) : AVR
Foil side view
0-00 : K,P,M,M2,X
2-71 : E,E2,E3,E9

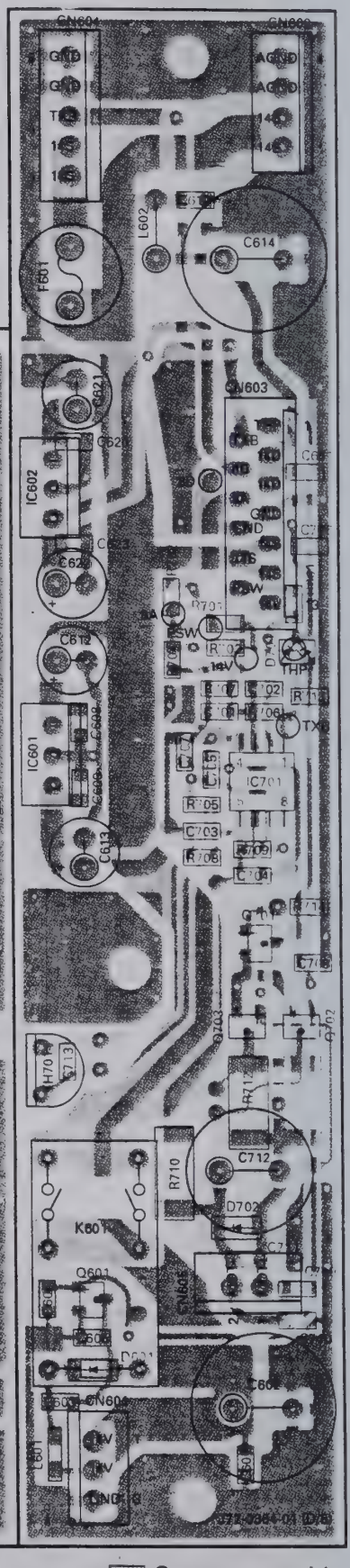

Component side
Foil side

TS-870S PC BOARD VIEWS

CONTROL UNIT (X53-356X-XX) (D/4) : MIC
Component side view

0-11 : K,P 0-21 : M 0-22 : M2 0-71 : X
2-71 : E 2-72 : E2 2-73 : E3 2-74 : E9

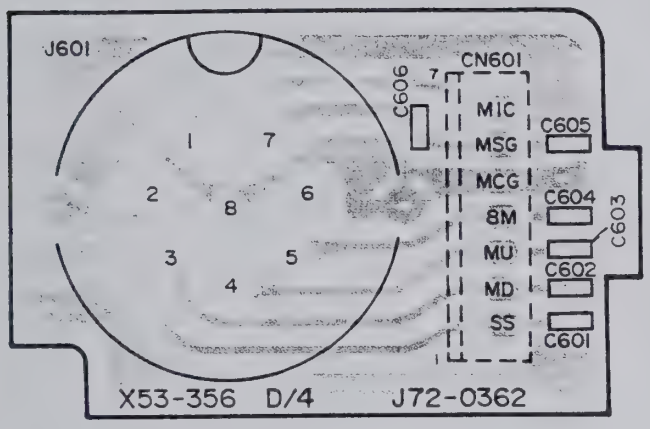

CONTROL UNIT (X53-356X-XX) (D/4) : MIC
Foil side view

0-11 : K,P 0-21 : M 0-22 : M2 0-71 : X
2-71 : E 2-72 : E2 2-73 : E3 2-74 : E9

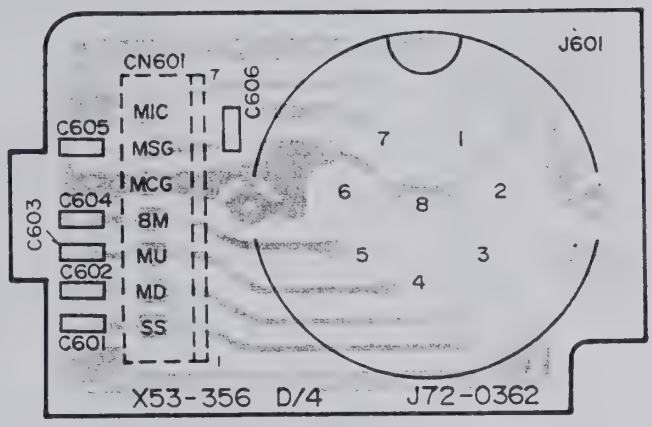

Component side
Foil side

PC BOARD VIEW TS-870S

FINAL UNIT (X45-351X-XX) (C/5)
: CONNECTION Foil side view

0-00 : K,P,M,M2,X
2-71 : E,E2,E3,E9

2SA1162
2SC2712

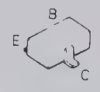

2SD1406

2SD1624

3SK131

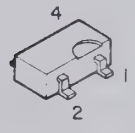

UPC7805H

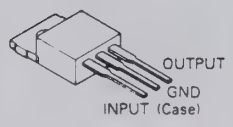

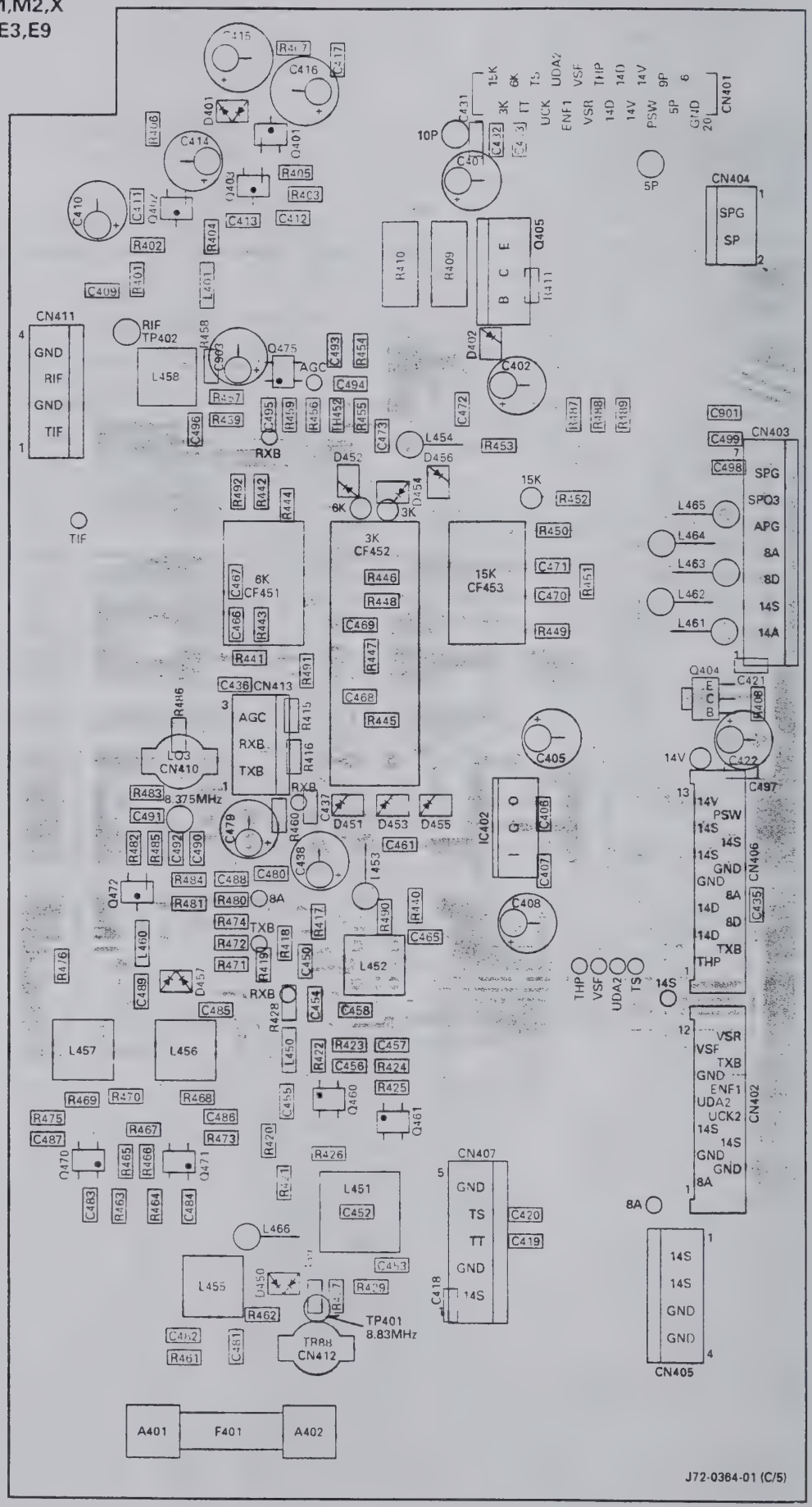

Component side
Foil side

DRU-3 (DIGITAL RECORDING UNIT)

DRU-3 Circuit Diagram

X43-3090-20

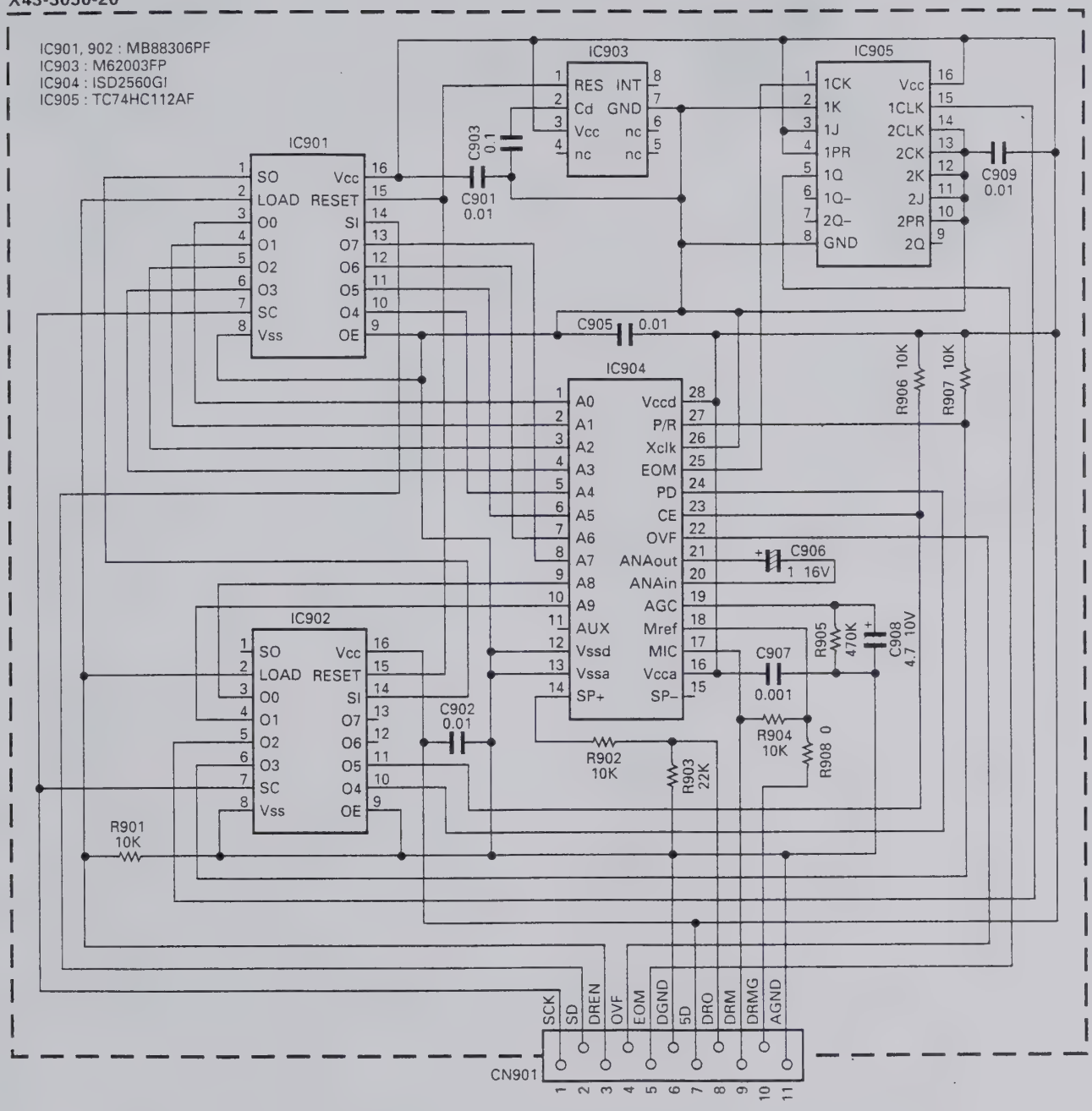

PG-2Z (DC CABLE)

PG-2Z External View

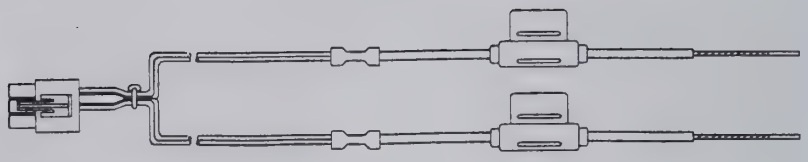

PG-2Z Parts List

Parts No.	New parts	Description
E30-3157-15		DC cable assy
F05-2531-05		Fuse (25A/32V)

SPECIFICATIONS

	Item			Rating
GENERAL	Mode			J3E (LSB, USB), A1A (CW), A3E (AM), F3E (FM), F1D (FSK)
	Number of memory channels			100
	Antenna impedance			50Ω (With Antenna Tuner 20 to 150Ω)
	Supply voltage			DC 13.8V ± 15%
	Grounding method			Negative ground
	Current	Transmit (Max.)		20.5A
		Receive (No signal)		2A
	Usable temperature range			–10°C to +50°C (+14°F to +122°F)
	Frequency stability (–10°C to +50°C)			Within ±10PPM
	Frequency accuracy (At room temperature)			Within ±10PPM
	Dimensions [W x H x D] (Projections included)			330 x 120 x 334 mm/13.0 x 4.72 x 13.1 in (339 x 135 x 375 mm/13.3 x 5.31 x 14.8 in)
	Weight			Approx. 11.5kg (25lbs)
TRANSMITTER	Frequency range	160m band		1.8*1 to 2.0*2MHz
		80m band		3.5 to 4.0*3MHz
		40m band		7.0 to 7.3*4MHz
		30m band		10.1 to 10.15MHz
		20m band		14.0 to 14.35MHz
		17m band		18.068 to 18.168MHz
		15m band		21.0 to 21.45MHz
		12m band		24.89 to 24.99MHz
		10m band		28.0 to 29.7MHz
	Output power*5	SSB, CW, FSK, FM	Max.	100W
			Min.	20W or less
		AM	Max.	25W
			Min.	20W or less
	Modulation	SSB		Balanced
		FM		Reactance
		AM		Low level
	Spurious emissions			–60dB or less
	Carrier suppression			50dB or more
	Unwanted sideband suppression (Modulation frequency 1.0kHz)			50dB or more
	Maximum frequency deviation (FM)	Wide		±5kHz or less
		Narrow		±2.5kHz or less
	Transmit frequency characteristics (–6dB) (TX lower cutoff : 300Hz, TX bandwidth : 2.3kHz)			300 to 2600Hz
	XIT shift frequency range			±9.99kHz
	Microphone imppedance			600Ω

*1 1.81MHz : Europe, France, Holland; 1.83MHz : Belgium, Spain

*2 1.85MHz : Belgium, France, Holland, Spain

*3 3.8MHz : Europe, Belgium, France, Holland, Spain

*4 7.1MHz : Europe, Belgium, France, Holland, Spain

*5 Belgium, Spain : 10W fixed on 160m band

TS-870S

SPECIFICATIONS

	Item			Rating
RECEIVER	Circuit type			Quadruple conversion superheterodyne
	Frequency range			100kHz to 30MHz
	Intermediate frequency			1st : 73.05MHz, 2nd : 8.83MHz, 3rd : 455kHz, 4th : 11.3kHz
	Sensitivity	SSB, CW, FSK (At 10dB (S+N)/N)	100kHz to 500kHz	1μV or less
			500kHz to 1.62MHz*6	4μV or less
			1.62MHz*6 to 24.5MHz	0.2μV or less
			24.5MHz to 30MHz	0.13μV or less
		AM (At 10dB (S+N)/N)	100kHz to 500kHz	2μV or less
			500kHz to 1.62MHz*6	31.6μV or less
			1.62MHz*6 to 24.5MHz	2μV or less
			24.5MHz to 30MHz	2μV or less
		FM (At 12dB SINAD)	28MHz to 30MHz	0.25μV or less
	Selectivity	SSB Lo : 300Hz, Hi : 2600Hz		–6dB : 2.3kHz, –60dB : 3.3kHz
		CW Width : 200Hz		–6dB : 200Hz, –60dB : 450Hz
		FSK Width : 500Hz		–6dB : 500Hz, –60dB : 1000Hz
		AM Lo : 100Hz, Hi : 4000Hz		–6dB : 9kHz, –60dB : 12kHz
		FM Width : 14kHz		–6dB : 14kHz, –60dB : 18kHz
	Image rejection (1.8MHz to 30MHz)			80dB or more
	1st IF rejection (1.8MHz to 30MHz)			80dB or more
	Notch filter atteneuation			40dB or more
	RIT shift frequency range			±9.99kHz
	Squelch sensitivity	SSB, CW, FSK, AM	100kHz to 500kHz	2μV or less
			500kHz to 1.62MHz*6	20μV or less
			1.62MHz*6 to 30MHz	2μV or less
		FM	28MHz to 30MHz	0.25μV or less
	Audio output (8Ω, 10% distortion)			1.5W or more
	Audio output impedance			8Ω

*6 1.705MHz : Canada, U.S.A.

Specifications are subject to change without notice or obligation due to ongoing technological developments.

KENWOOD CORPORATION
14-6, Dogenzaka 1-chome, Shibuya-ku, Tokyo 150, Japan

KENWOOD SERVICE CORPORATION
P.O. BOX 22745, 2201 East Dominguez Street, Long Beach, CA 90801-5745, U.S.A.

KENWOOD ELECTRONICS LATIN AMERICA S.A.
P.O. BOX 55-2791 Piso 6 Plaza Chase Cl. 47 y Aquilino de la Guardio Panama, Republic of Panama

KENWOOD ELECTRONICS CANADA INC.
6070 Kestrel Road, Mississauga, Ontario, Canada L5T 1S8

KENWOOD ELECTRONICS DEUTSCHLAND GMBH
Rembrücker Str. 15, 63150 Heusenstamm, Germany

KENWOOD ELECTRONICS BENELUX N.V.
Mechelsesteenweg 418 B-1930 Zaventem, Belgium

TRIO-KENWOOD FRANCE S.A.
13, Boulevard Ney, 75018 Paris, France

TRIO-KENWOOD U.K. LIMITED
KENWOOD House, Dwight Road, Watford, Herts., WD1 8EB United Kingdom

KENWOOD ELECTRONICS NEDERLAND B.V.
Amsterdamseweg 35, 1422 AC Uithoorn, The Netherlands

KENWOOD ELECTRONICS ITALIA S.p.A.
Via G. Sirtori, 7/9 20129 Milano, Italy

KENWOOD IBERICA S.A.
Bolivia, 239-08020 Barcelona, Spain

KENWOOD ELECTRONICS AUSTRALIA PTY. LTD.
(A.C.N. 001 499 074)
P.O. Box 504, 8 Figtree Drive, Australia Centre, Homebush, N.S.W. 2140, Australia

KENWOOD & LEE ELECTRONICS, LTD.
Unit 3712-3724, Level 37, Tower one Metroplaza, 223 Hing Fong Road, Kwai Fong, N.T., Hong Kong

HF TRANSCEIVER

TS-870S

SERVICE MANUAL

KENWOOD

© 1995-2 PRINTED IN JAPAN
B51-8296-00(N)1360

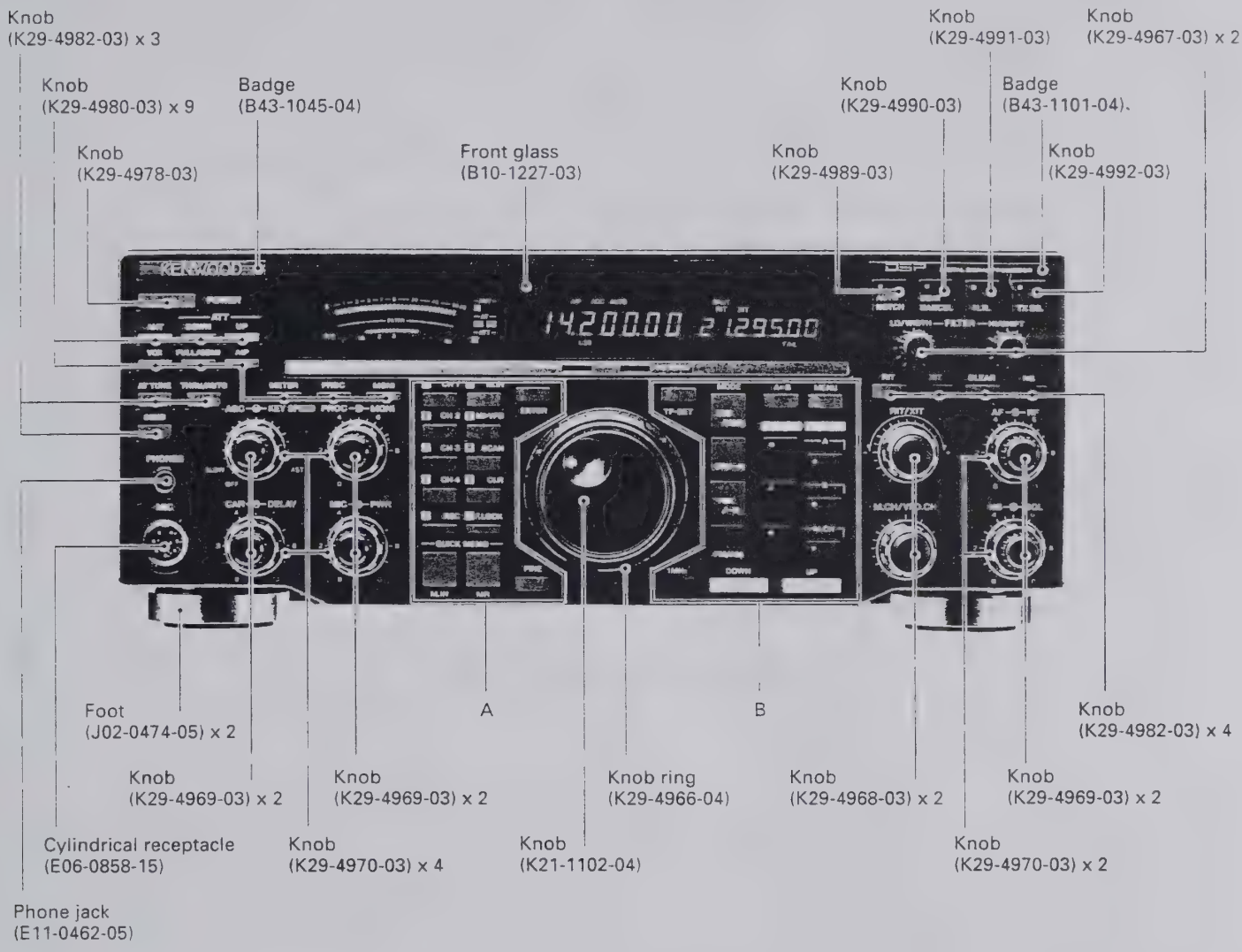

A

Knob (K29-4982-03)	Knob (K29-4982-03)	Knob (K29-4982-03)
Knob (K29-4982-03)	Knob (K29-4982-03)	
Knob (K29-4982-03)	Knob (K29-4982-03)	
Knob (K29-4982-03)	Knob (K29-4982-03)	
Knob (K29-4980-03)	Knob (K29-4980-03)	
Knob (K29-4984-03)	Knob (K29-4984-03)	Knob (K29-4982-03)

B

Knob (K29-4982-03)	Knob (K29-4985-03)	Knob (K29-4982-03)	Knob (K29-4982-03)
	Knob (K29-4986-03)	Knob (K29-4983-03)	Knob (K29-4981-03)
	Knob (29-4987-03)	Knob (K29-4983-03)	Knob (K29-4981-03)
	Knob (K29-4988-03)	Knob (K29-4983-03)	Knob (K29-4981-03)
Knob (K29-4982-03)	Knob (K29-4979-03)		Knob (K29-4979-03)

CONTENTS

CIRCUIT DESCRIPTION 3
DESCRIPTION OF COMPONENTS 45
SEMICONDUCTOR DATA 53
PARTS LIST 58
EXPLODED VIEW 81
PACKING 88
ADJUSTMENT 89
TERMINAL FUNCTION 104
CIRCUIT DIAGRAMS / PC BOARD VIEWS
- LCD ASSY (B38-0736-05) 110
- RF UNIT (X44-3210-00) (A/9) : RF 113
- RF UNIT (X44-3210-00) (B/9) : PLL 117
- RF UNIT (X44-3210-00) (C/9) 127
- VCO2 (X58-3390-03) 127
- FINAL UNIT (X45-351X-XX) (A/5) : FINAL 128
- FINAL UNIT (X45-351X-XX) (B/5) : FILTER 130
- FINAL UNIT (X45-351X-XX) (D/5) : AVR 132
- FINAL UNIT (X45-351X-XX) (E/5) : RELAY 132
- AT UNIT (X53-3340-02) (A/2) 137
- AT UNIT (X53-3340-02) (B/2) 139
- CONTROL UNIT (X53-356X-XX) (A/4) : CONTROL 143
- CONTROL UNIT (X53-356X-XX) (B/4) : SW 147
- TX-RX UNIT (X57-4620-00) 155
- RF UNIT (X44-3210-00) (D/9) 169
- RF UNIT (X44-3210-00) (E/9) 169
- RF UNIT (X44-3210-00) (F/9) 170
- RF UNIT (X44-3210-00) (G/9) 170
- RF UNIT (X44-3210-00) (H/9) 171
- RF UNIT (X44-3210-00) (I/9) 171
- FINAL UNIT (X45-351X-XX) (C/5) : CONNECTION 172
- CONTROL UNIT (X53-356X-XX) (D/4) : MIC 174

SCHEMATIC DIAGRAM 175
BLOCK DIAGRAM 179
LEVEL DIAGRAM 183
DRU-3 (DIGITAL RECORDING UNIT) 185
PG-2Z (DC CABLE) 188
SPECIFICATIONS 189

CIRCUIT DESCRIPTION

Frequency Configuration

The TS-870S is quadruple conversion in receive mode. As a transmitter, it is quadruple conversion in non-FM modes and double conversion in FM mode.

The fourth 11.3kHz IF signal is converted from analog to digital, connected to the DSP in receive mode, and decoded. In transmit mode, the microphone input signal is converted from analog to digital and applied to the DSP. It is converted from digital to analog, passed through a mixer, and becomes the 455kHz TIF signal. In FM mode, however, only 455kHz carriers are output from the DSP.

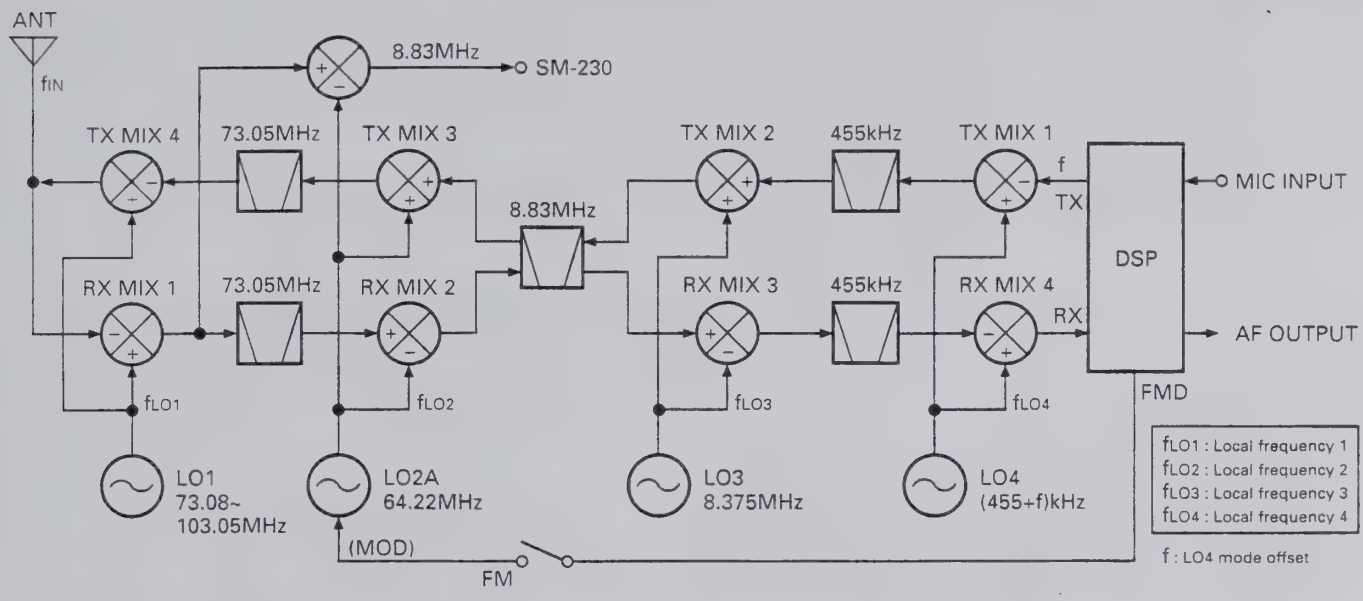

Fig. 1 Frequency configutation

■ Frequency configuration

When the receiver frequency by fIN from the antenna in SSB mode is zero beat (namely, at zero to the SSB signal with a carrier point of fIN), the relationship between these signals is expressed by the following equation.

$$f_{IN} = f_{LO1} - f_{LO2} - f_{LO3} - f_{LO4} + f \quad \ldots . (1)$$

Since all these frequencies are generated by the PLL or DDS circuits as shown in the PLL block diagram in Figure 2, the receiver frequency is determined only by the reference frequency fSTD, the PLL dividing ratio and DDS data. Therefore, the reference frequency accuracy equals the operating frequency accuracy.

The accuracy of the reference oscillator used in the TS-870S is 10ppm (–10 to +50°C). If the temperature-compensated crystal oscillator (TCXO) SO-2 is used, the accuracy becomes 0.5ppm (–10 to +50°C).

The TS-870S local oscillator and CAR DDS are independent of each other. However, they can be operated like a cancel loop configuration by changing the CAR and local oscillator PLL data simultaneously via a microprocessor. This function allows a shift (fLO1, fLO3, fLO4) by the mode change to be performed and the band width of the slope tune to be varied (fLO1, fLO3, fLO4).

When used as a transmitter in SSB mode or in other modes, likewise the frequency is determined by the reference frequency fSTD and dividing ratio. The display frequencies in the modes are listed in Table 1. In the FSK mode, the TS-870S displays the mark transmitter frequency.

In CW mode, the TS-870S receiving pitch can be changed to the required frequency in 50Hz steps with the desired signal remaining in the center of the IF filter band-pass (Variable CW pitch system). Since the receiving pitch varies along with the transmitter side tone, it is possible to zero-beat by receiving the desired signal at the same pitch as the side tone.

FM transmission is obtained in this system by modulating the f_{LO2} via application of the audio signal from the microphone to the VCO2.

Mode	Display frequency
USB, LSB	Carrier point frequency
CW	Transmission carrier frequency
FSK	Mark transmitter frequency
AM, FM	IF filter center frequency

Table 1 Display frequency in each mode

PLL Circuit

The TS-870S PLL circuit consists of a PLL loop that includes DDS covering a frequency range between 30kHz to 30MHz in 10Hz or 1Hz steps in accordance with the 20kHz reference frequency; DDS that generates other local oscillators (LO3, LO4); and a PLL loop that produces LO2A.

The dividing ratio data to each PLL loop and the DDS data are controlled by a microprocessor. Each loop is controlled by a single crystal frequency control system according to the reference frequency f_{STD}. (See the PLL block diagram in Figure 2.)

■ Reference signal generation circuit

The reference frequency f_{STD} used for frequency control is determined by the 20MHz crystal oscillator (X800 and Q800 : 2SC2714). One reference frequency is output as the reference signal f_{REF} for the PLL and DDS in the PLL section. The other is sent to the TX-RX unit and used as the PLL reference signal for the PLL and DSP.

The crystal oscillator may be replaced by an optional TCXO (SO-2), and the TCXO may be switched to with slide switch S800.

If the optional TCXO (SO-2) is installed, the S800 switch must be set to the SO-2 position.

■ LO2 (PLL section)

Q1 : 2SK508NV in VCO2 (A501 : X58-3390-03) generates 64.22MHz. The 20MHz reference frequency f_{REF} is applied to pin 15 of IC509 : MB86001PF, and is divided internally by a factor of 1000 (4000 in FM mode) to produce a 20kHz (5kHz in FM mode) comparison frequency.

The VCO2 output is applied to pin 6 of IC509 : MB86001PF, and is internally divided by a factor of 3211 (12844 in FM mode). It is compared with the 20kHz (5kHz in FM mode) signal using the phase comparator. The VCO2 frequency is locked. The division ratio is transmitted from the control unit.

The output from PLL2 is passed through buffer Q539, amplified by amplifier Q532, passed through a low-pass filter, its impedance is converted, and is then output to the RF section as LO2A.

■ LO1 (PLL loop)

Four VCOs and uses Q520 to Q523 : 2SK508NV x 4 to generate 73.08MHz to 103.05MHz. The 20MHz reference frequency f_{REF} is applied to pin 15 of PLL IC IC507 : MB86001PF, and is internally divided by a factor of 20 to produce a 1MHz comparison frequency. The output is passed through amplifier Q524, and a band-pass filter. One output is passed through buffer Q526 : 2SC2996 and a low-pass filter and goes to the RF section.

The other output signal is passed through buffer Q525 : 2SC2714 and applied to pin 5 of mixer IC508 : SN76514. A signal of 54.54 to 55.54MHz is input to pin 11 of IC508 and converted to a signal of 18.0 to 48.0MHz. This signal is output from pin 13. The signal is passed through a high-pass filter, a low-pass filter, and amplifier Q531 : 2SC2714 and Q530 : 2SC2712, and goes to pin 6 of PLL IC IC507 : MB86001PF.

This signal is internally divided by N, and compared with the 1MHz signal using the phase comparator. The mixer output frequency is locked in 1MHz steps. The division ratio N is transmitted from the control unit as data (N : 18 to 48) corresponding to 0MHz to 30MHz in 1MHz steps. One of the four VCOs is selected according to the VCO change signal (VB0 to VB3) sent from the control unit.

CIRCUIT DESCRIPTION

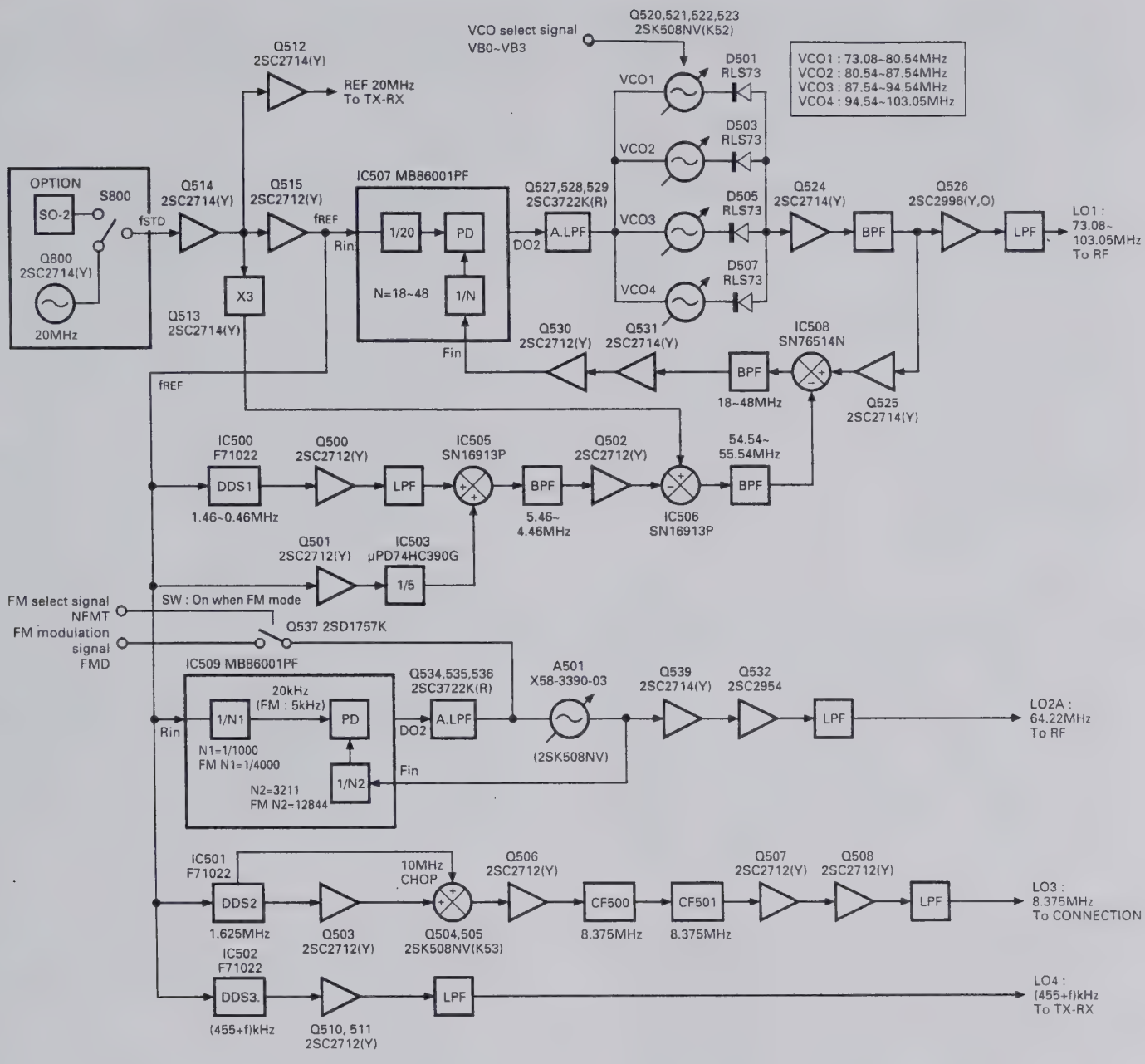

Fig. 2 PLL block diagram

CIRCUIT DESCRIPTION

DDS1 (IC500 : F71022) generates 1.46 to 0.46MHz digital signals. They are converted to analog signals by a digital to analog converter (consisting of CP500, CP501, and Q500), passed through a low-pass filter, and fed to pin 5 of mixer IC505 : SN16913P. The 4MHz signal produced by division of 20MHz reference frequency fREF by divider IC503 : UPD74HC390G by a factor of 5 is input to pin 2 of the mixer IC505, and a 5.46 to 4.46MHz signal is output from pin 1. The output signal is passed through a band-pass filter and buffer Q502, and input to pin 5 of mixer IC506 : SN16913P. The 60MHz signal obtained by tripling 20MHz reference frequency fREF via multiplying circuit Q515 is mixed, and a 54.54 to 55.54MHz signal is output. This signal is passed through a band-pass filter, and goes to pin 13 of mixer IC508.

DDS1 sweeps the 1.46 to 0.46MHz digital signal output in 10 or 1Hz steps, and LO1 covers the 73.08 to 103.05MHz signal in 10 or 1Hz steps and is output to the RF section.

■ LO3 generation

DDS2 (IC501 : F71022) generates a digital signal of the 1.625MHz basic frequency. It is converted to an analog signal by a digital-to-analog converter (consisting of CP502, CP503, and Q503), and chopped by a circuit consisting of Q503 to Q505 so as to extract an 8.375MHz primary harmonic component. Unwanted components are removed by a ceramic filter consisting of CF500 and CF501. The resulting signal is passed through amplifier Q507, buffer Q508, and a low-pass filter, and output to the connection section (final unit) as the LO3 signal.

■ LO4 generation

DDS3 (IC502 : F71022) generates a (455+f) kHz digital signal. It is converted to an analog signal by a digital to analog converter (consisting of CP504, CP505, and Q510), passed through buffer Q511 and a low-pass filter, and output to the TX-RX unit as the LO4 signal.

The LO4 signal is a local oscillator signal used to generate a DSP processing signal f from 455kHz. The f frequency is described in the local signal section (page 14).

■ Subtone generation

During FM transmission, the DSP generates a signal to which a subtone is added and is then sent to the main unit as it is.

■ PLL data

The TS-870S has three PLLs to which the main CPU sends PLL data based on the displayed frequency.

- PLL comprising a VFO (PLL section)
- Local oscillator PLL for frequency conversion (PLL section)
- PLL that generates timing clocks for digital signal processing (TX-RX unit)

The VCOs change with the following conditions.

- Main encoder change → VCO1 (PLL section)
- Mode change → VCO2 (PLL section)

Each PLL IC outputs an unlock signal. If any PLL is unlocked, the main display indicates "....." (dots). If the unlocked PLL is the TX-RX unit, the sub-display shows "Err-FD", and if it is the PLL unit, it shows "Err-FE" to indicate that it is unlocked.

The unlocking of each PLL is output to pin 11 (UL) of PLL IC : MB86001PF as unlock data (UNLOCK : LOW).

Loop	VCO No.	IC No.	Comparison frequency/divide ratio	Variable divide ratio	Frequency (MHz)
LO1	VCO1	IC507	1MHz/20	18~48	73.08~103.05
LO2	VCO2	IC509	20kHz/1000 5kHz/4000 : FM	3211 12844 : FM	64.22

CIRCUIT DESCRIPTION

■ DDS circuit configuration

The DDS IC has been developed with standard cells to implement a high-speed operation circuit and large-capacity ROM at a low cost.

1) IC configuration

The IC consists of the following components:

Two 28 bit registers for setting frequency data, one 28 bit frequency shift register for addition to the frequency register, a 23 bit parallel signal input section for frequency modulation with a parallel signal, and a data entry and selection section.

Frequency modulation section comprised of a 28 bit adder that adds frequency data and frequency modulation data

Phase data operation section that adds data from the frequency modulation section with the 28 bit phase data register

SIN-ROM that converts phase data to sine data.

2) Frequency/shift data setting

Using serial signals synchronized with clock pulses, a total of 30 bits (2 bits that specify the destination to which data are set and 28 bits for frequency data) are set in three internal registers.

3) Frequency register selection

The data set in the two frequency registers are selected by the SLAB input of the DDS IC. This pin handles the TXC signal. This function eliminates the need for the TS-870S microprocessor to set frequency data for each transmission and reception.

4) Frequency data selection

The SPSL input of the DDS IC selects whether to use the data in the internal frequency shift register or the data from parallel input as frequency modulation data.

5) Frequency modulation

The MDEN input of the DDS IC enables or disables frequency modulation. When frequency modulation is enabled, frequency data is added, and the result is input to the phase data operation section.

6) Phase data operation

The target frequency phase data is output by accumulating 28 bit frequency data in the 28 bit phase accumulator.

$Fout = Fs/2^{28} \cdot Dsum$

Fs : DDS IC input frequency/2

Dsum : Frequency data+Frequency modulation data

If 2^{25} is set for Dsum when 1/8 Fs is output, the phase data must be increased by $\pi/8$.

A 28 bit absolute value operation has been used here, but a 28 bit signed operation can also be used, assuming that the MSB is a sign. If complement data of 8000000 to FFFFFFFF (hex) is set, the phase moves in the negative direction for the positive data.

7) SIN-ROM

Phase data from the phase data operation section is converted to sine data of 0000 to FFFF (hex) in the 16 bit offset binary format.

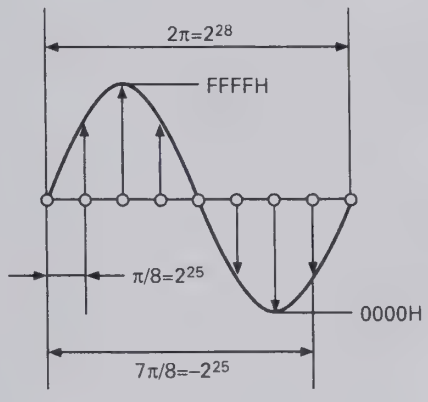

CIRCUIT DESCRIPTION

Receiver Circuit

The basic configuration of the receiver circuit is quadruple conversion. After the frequency is converted to the 11.3kHz fourth IF, the DSP carries out AGC, filtering, detection, and signal processing. Figure 3 is a receiver block diagram.

The signal coming from the antenna connector is passed through the antenna switching relay (K301) in the final unit (E/5 relay section), the antenna tuner unit, and the transmit/receive changeover relay (K302) within the relay section, and then goes to the CN2 (RAT) of the RF unit (A/9 RF section).

The signal input to the RF unit is passed through protection lamp PL1 for strong signal input, external receiver power distribution circuit L1 and L2 and switching circuit K1, and is input to the ATT (–6dB, –12dB) circuit. This distribution circuit is switched when the EXT RX (function that distributes the signals from the antenna to the external receiver), which is set from menu No.53, is turned ON. When this function is ON, the signal from the antenna is attenuated by about 4dB and output to the receiver section in the subsequent stage and the EXT RX terminal on the rear. The signal to the EXT RX terminal is passed through lamp PL2 for protection during transmission. The lamp turns OFF when about 10W is input.

The signal is passed through the ATT switching circuit, then goes to the BC band attenuation circuit (L7 to L9, C19 to C22). The BC band signal is attenuated by 5 to 10dB to prevent power saturation of the band-pass filter switching diode resulting from interference from a proximate station. The band-pass filter consists of two low-pass filters and 10 band-pass filters, and passes signals during transmission. The pin diode (1SV128) is used to change the input to raise the signal saturation level when a HIGH signal is input.

The RF amplifier circuit functions as a low-gain amplifier using Q14 and Q15 : 2SK2218(5) x 2 when the frequency is 21.49MHz or lower, and it functions as a high-gain amplifier using Q13 : 3SK131(M) when the frequency is higher than 21.49MHz. It is bypassed when AIP is ON.

The 73.05MHz first IF signal is generated by quad mixer Q17 to Q20 : 2SK520(K44) x 4. It is passed through XF1 73.05MHz MCF, Q24 : 3SK131(M) first mixer amplifier, and Q26 and Q27 : 2SK520(K43) mixer to produce a 8.83MHz second IF signal. The second IF signal is divided into two signals, one of which is branched to the noise blanker, amplified by amplifier Q28, and then goes to the NB circuit. The other signal is input to the second IF signal amplifier, and serves as a blanking gate by the NB and RBK signals. The amplified second IF signal is passed through the 8.83MHz IF filter, and output to the final unit (C/5 connection section) from CN10. This signal is switched with the diode switch D62 and D68, and functions as a second IF signal output during reception and a third IF signal input during transmission.

The second IF signal input to CN412 in the final unit (C/5 connection section) is routed to the receiver circuit by D450, and input to the mixer Q460 and Q461 to generate a 455kHz third IF signal. It is passed through the 455kHz IF filter, amplified by third IF amplifier Q475, and output by CN411 to the TX-RX unit as RIF signal. The total gain of the receiver unit is adjusted by VR1 in the TX-RX unit.

CIRCUIT DESCRIPTION

■ IF filter

The IF filter consists of a DSP digital filter. If there is a HIGH signal outside the DSP filter band, the analog to digital converter input level may be saturated, and the filter does not work properly. Thus, an analog filter is inserted between the second IF (8.83MHz) and the third IF (455kHz) so that it does not impair the DSP filter properties. To operate each filter properly, there are three kinds of filters for each IF signal and also slope tuning is carried out.

1) Filters characteristics

Item	Rating
Nominal center frequency	73.05MHz
Pass bandwidth	±7.5kHz or more at 3dB
Attenuation bandwidth	±30kHz or less at 40dB
Ripple	1.0dB or less
Insertion loss	3.0dB or less
Guaranteed attenuation	70dB or more at fo + (500 to 1000kHz) 70dB or more at fo – (200 to 1000kHz)
Center frequency deviation	Within ±1.5kHz at 3dB
Terminating impedance	2kΩ ± 10%

MCF (L71-0401-05) : RF unit XF1

Item	Rating
Nominal center frequency	8830kHz
Center frequency deviation	Within ±150Hz at 6dB
Pass bandwidth	±1.5kHz or more at 6dB
Attenuation bandwidth	±1.9kHz or less at 20dB ±2.75kHz or less at 60dB ±3.5kHz or less at 80dB
Ripple	2dB or less
Insertion loss	6dB or less
Guaranteed attenuation	80dB or more in the range ±3.5kHz to ±1MHz
Terminating impedance	600Ω / 15pF

MCF (L71-0235-05) : RF unit XF2

Item	Rating
Nominal center frequency	8830kHz
Pass bandwidth	±3.0kHz or more at 6dB
Attenuation bandwidth	±16.0kHz or less at 60dB ±13.0kHz or less at 50dB
Guaranteed attenuation	70dB or more with in fo ± 1MHz (Without spurious in the range fo to fo+500kHz)
Ripple	Within 1.0dB
Insertion loss	Within 1.5dB
Terminating impedance	1850kΩ / 2pF

MCF (L71-0266-05) : RF unit XF3

Item	Rating
Nominal center frequency	8.400MHz
3dB attenuation bandwidth	Within 180 ± 40kHz
20dB attenuation bandwidth	400kHz or less
Insertion loss	9.0dB or less Formula : 20 x log {E1÷ (2 x E2)}
Ripple	1.0dB or less (within 3dB band)
Spurious attenuation	25dB or more (6.0 to 10.0MHz)
Voltage capacity	50V DC (1 minute)
Insulating resistance	100MΩ or more (100V DC)
Input and output impedance	330Ω

Ceramic filter (L72-0343-05) : RF unit CF500, 501

Item	Rating
Nominal center frequency	455kHz
6dB bandwidth	±3kHz (455kHz)
50dB bandwidth	±9kHz (455kHz)
Ripple	2dB or less (within 455+2kHz)
Insertion loss	6dB or less
Guaranteed attenuation	60dB or more (within 455±100kHz)
Input and output impedance	2.0kΩ

Ceramic filter (L72-0319-05) : Final unit CF451

Item	Rating
Center frequency	455±0.20kHz
6dB bandwidth	2.9 to 3.2kHz
60dB bandwidth	4.7kHz or less
Guaranteed attenuation	60dB or more at 0.1 to 1MHz
Spurious	40dB or more at 600 to 700kHz
6dB band ripple	2dB or less
Insertion loss	6dB or less
Input and output impedance	2kΩ

Ceramic filter (L72-0333-05) : Final unit CF452

Item	Rating
Nominal center frequency	455kHz
6dB bandwidth	±7.5kHz or more (455kHz)
50dB bandwidth	±15kHz or less (455kHz)
Ripple	3dB or less (within 455+5kHz)
Insertion loss	6dB or less
Guaranteed attenuation	35dB or more (within 455±100kHz)
Input and output impedance	1.5kΩ

Ceramic filter (L72-0366-05) : Final unit CF453

CIRCUIT DESCRIPTION

Receiver Circuit

The basic configuration of the receiver circuit is quadruple conversion. After the frequency is converted to the 11.3kHz fourth IF, the DSP carries out AGC, filtering, detection, and signal processing. Figure 3 is a receiver block diagram.

The signal coming from the antenna connector is passed through the antenna switching relay (K301) in the final unit (E/5 relay section), the antenna tuner unit, and the transmit/receive changeover relay (K302) within the relay section, and then goes to the CN2 (RAT) of the RF unit (A/9 RF section).

The signal input to the RF unit is passed through protection lamp PL1 for strong signal input, external receiver power distribution circuit L1 and L2 and switching circuit K1, and is input to the ATT (–6dB, –12dB) circuit. This distribution circuit is switched when the EXT RX (function that distributes the signals from the antenna to the external receiver), which is set from menu No.53, is turned ON. When this function is ON, the signal from the antenna is attenuated by about 4dB and output to the receiver section in the subsequent stage and the EXT RX terminal on the rear. The signal to the EXT RX terminal is passed through lamp PL2 for protection during transmission. The lamp turns OFF when about 10W is input.

The signal is passed through the ATT switching circuit, then goes to the BC band attenuation circuit (L7 to L9, C19 to C22). The BC band signal is attenuated by 5 to 10dB to prevent power saturation of the band-pass filter switching diode resulting from interference from a proximate station. The band-pass filter consists of two low-pass filters and 10 band-pass filters, and passes signals during transmission. The pin diode (1SV128) is used to change the input to raise the signal saturation level when a HIGH signal is input.

The RF amplifier circuit functions as a low-gain amplifier using Q14 and Q15 : 2SK2218(5) x 2 when the frequency is 21.49MHz or lower, and it functions as a high-gain amplifier using Q13 : 3SK131(M) when the frequency is higher than 21.49MHz. It is bypassed when AIP is ON.

The 73.05MHz first IF signal is generated by quad mixer Q17 to Q20 : 2SK520(K44) x 4. It is passed through XF1 73.05MHz MCF, Q24 : 3SK131(M) first mixer amplifier, and Q26 and Q27 : 2SK520(K43) mixer to produce a 8.83MHz second IF signal. The second IF signal is divided into two signals, one of which is branched to the noise blanker, amplified by amplifier Q28, and then goes to the NB circuit. The other signal is input to the second IF signal amplifier, and serves as a blanking gate by the NB and RBK signals. The amplified second IF signal is passed through the 8.83MHz IF filter, and output to the final unit (C/5 connection section) from CN10. This signal is switched with the diode switch D62 and D68, and functions as a second IF signal output during reception and a third IF signal input during transmission.

The second IF signal input to CN412 in the final unit (C/5 connection section) is routed to the receiver circuit by D450, and input to the mixer Q460 and Q461 to generate a 455kHz third IF signal. It is passed through the 455kHz IF filter, amplified by third IF amplifier Q475, and output by CN411 to the TX-RX unit as RIF signal. The total gain of the receiver unit is adjusted by VR1 in the TX-RX unit.

CIRCUIT DESCRIPTION

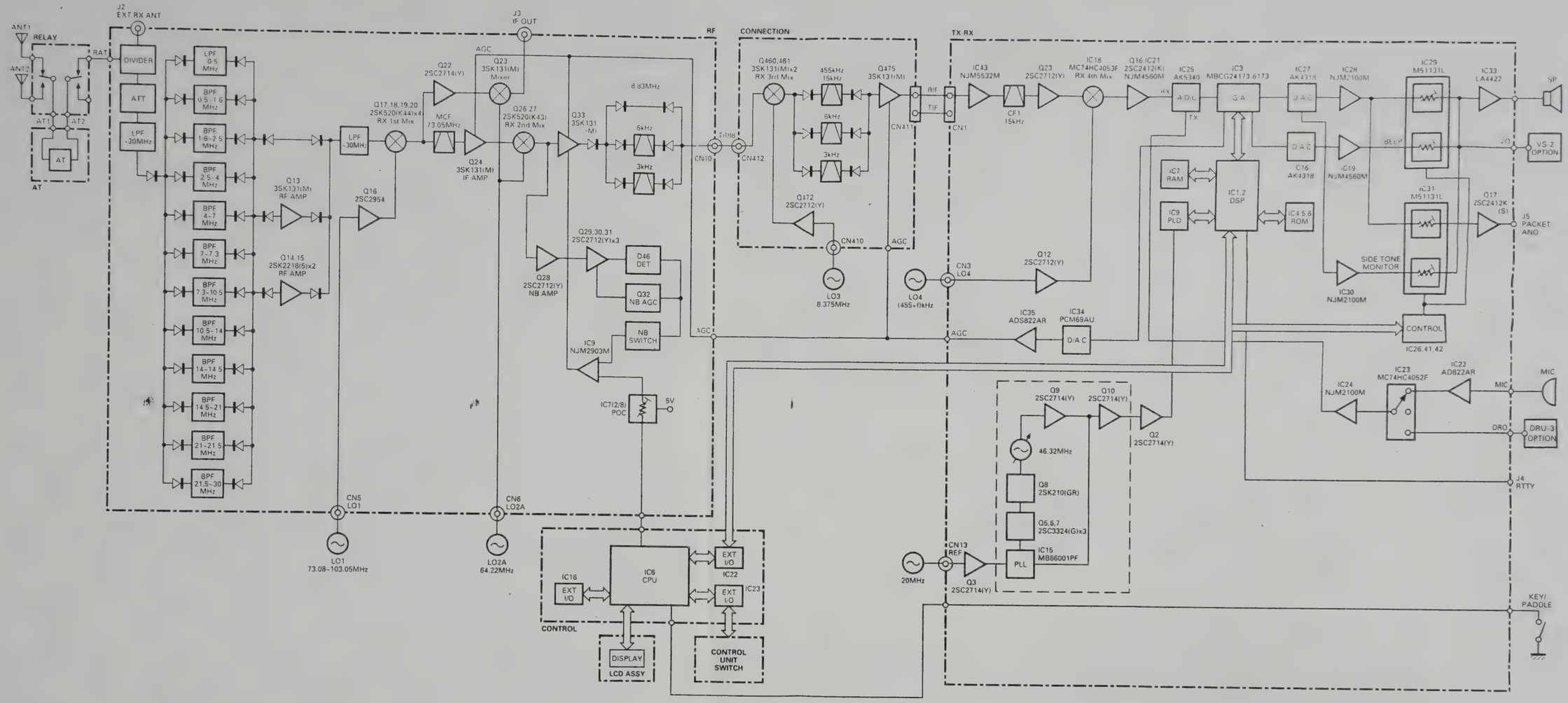

Fig. 3 Receiver block diagram

CIRCUIT DESCRIPTION

■ IF gain correction

The total gain changes when the AIP is turned ON or OFF or the band is 21.49MHz or higher. To limit the changes, the DSP corrects the IF gain. Table 2 lists the corrections. When the "AIP S-meter correction" on menu No.11 is turned ON, the S-meter is corrected when the AIP is turned ON. And since the IF gain is corrected greatly, the receiver internal noise output becomes large.

Frequency	Correction (dB)			Pre-amp gain (dB) reference
	AIP			
	OFF	ON1 (Menu 11 OFF)	ON2 (Menu 11 ON) SSB, CW, FSK only	
30kHz~ 21.49MHz	–2	0	+12	15
21.49MHz~ 30.MHz	–7	0	+12	21

Table 2 IF gain corrections

■ NB circuit

The noise blanker, like the conventional one, branches the signal before the narrow-band filter of the 8.83MHz second IF, and detects noise, and performs blanking using the second IF amplifier as a gate. The signal is amplified by Q28, detected by the AGC amplification and noise detection circuit consisting of Q29 to Q32 and D46, and then a blanking pulse is generated by the IC9 comparator. The noise detection circuit Q29 to Q32 and D46 is separated into segments by a jumper in the unit to prevent sneak path.

■ Slope tune

The operating principle of SSB-SLOPE-TUNE is explained first. When f_{LO1}, f_{LO3}, and f_{LO4} in Figure 4 are at their normal frequencies, the synthesized bandwidth is indicated by A. If the f_{LO1} frequency is increased by $\Delta f1$ and the f_{LO3} frequency is decreased by $\Delta f1$, the filter of the 8.83MHz band shifts to position B. The synthesized bandwidth is indicated by the section overlapped by A and B. When the frequencies of f_{LO1} and f_{LO3} are lowered by $\Delta f2$, only the 455kHz second IF filter shifts to position C. The synthesized bandwidth is indicated by the section overlapped by B and C.

Therefore, high frequencies are cut off by increasing the f_{LO1} frequency and decreasing the f_{LO3} frequency. Low frequencies are cut off by decreasing the f_{LO3} and f_{LO4} frequencies. The TS-870S enables these operations using the DSP filter.

In SSB mode, slope tune high cut/low cut is switched by using the filter select control : in CW mode, the WIDTH (bandwidth)/SHIFT (center frequency) is changed, and in FSK mode, the WIDTH (bandwidth) is changed. The microcomputer in the control unit sends filter select data to the DSP, and slope tuning is carried out by changing frequency data given to the PLL and DDS. The second IF (8.83MHz) and third IF (455kHz) filters are selected to carry out slope tuning effectively. Tables 3 and 4 list filter selections, slope tuning and analog filter high cut/low cut amounts. Slope tuning low cut/high cut can be switched in AM mode, and the WIDTH can be switched in FM mode by using DSP filters only, and the analog filter is fixed to 15kHz.

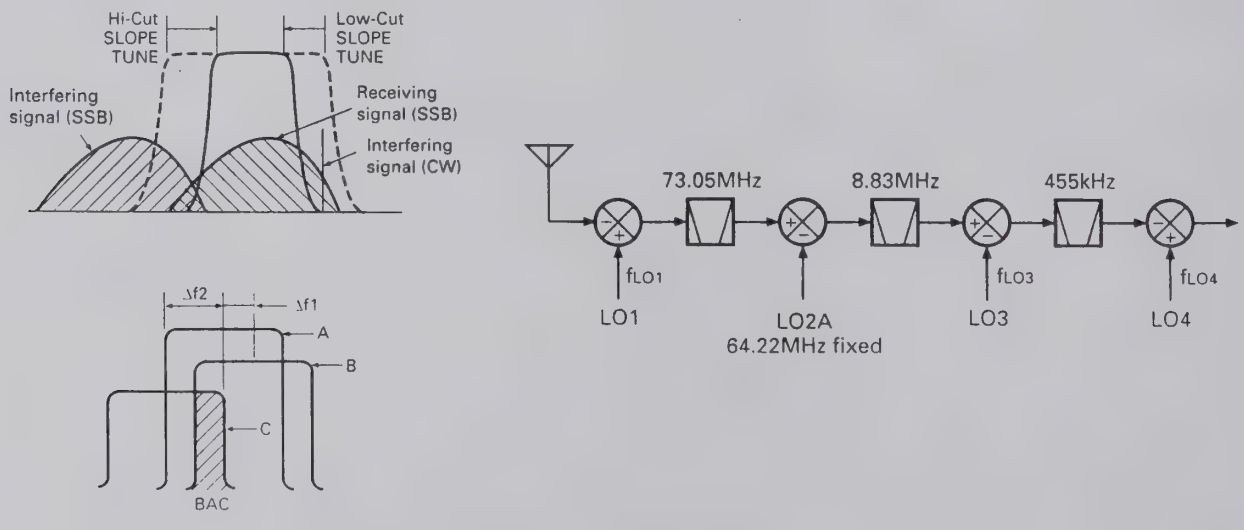

Fig. 4 SSB slope tune operating principle

CIRCUIT DESCRIPTION

	1.4k	1.6k	1.8k	2.0k	2.2k	2.4k	2.6k	2.8k	3.0k	3.4k	4.6k	6.0k
0 (Hz)	1.0k	0.8k	0.6k	0.4k	0.2k	0.0k	1.4k	1.2k	1.0k	0.6k	0.0k	0.0k
50	↑	↑	↑	↑	↑	↑	↑	↑	↑	↑	↑	↑
100	↑	↑	↑	↑	↑	↑	↑	↑	↑	↑	↑	↑
200	↑	↑	↑	↑	↑	↑	–0.2k	↑	↑	↑	↑	↑
300	↑	↑	↑	↑	↑	↑	↑	↑	↑	↑	↑	↑
400	↑	↑	↑	↑	↑	↑	↑	–0.4k	↑	↑	↑	↑
500	↑	↑	↑	↑	↑	↑	↑	↑	↑	↑	↑	↑
600	↑	↑	↑	↑	↑	↑	↑	↑	–0.6k	↑	↑	↑
800	↑	↑	↑	↑	↑	↑	↑	↑	↑	↑	–0.6k	↑
1000	↑	↑	↑	↑	↑	↑	↑	↑	↑	–1.0k	↑	↑

← High cut position

Filter selection
- 3kHz filter
- 6kHz filter
- 15kHz filter
- Default

↑
Low cut posotion
(455kHz filter) Low cut amount

(8.83MHz filter) High cut amount

Table 3 SSB slop tuning and analog filter high/low cut (Hz)

	400	450	500	550	600	650	700	750	800	850	900	950	1000
50 (Hz)	375	425	475	525	575	625	675	725	775	825	875	925	975
100	350	400	450	500	550	600	650	700	750	800	850	900	950
200	300	350	400	450	500	550	600	650	700	750	800	850	900
400	200	250	300	350	400	450	500	550	600	650	700	750	800
600	100	150	200	250	300	350	400	450	500	550	600	650	700
1000	–100	–50	0	50	100	150	200	250	300	350	400	450	500

← Filter center position

Default

↑
Filter width

Table 4-1 CW WIDTH/SHIFT low cut amount (Hz)

	400	450	500	550	600	650	700	750	800	850	900	950	1000
50 (Hz)	1975	1925	1875	1825	1775	1725	1675	1625	1575	1525	1475	1425	1375
100	1950	1900	1850	1800	1750	1700	1650	1600	1550	1500	1450	1400	1350
200	1900	1850	1800	1750	1700	1650	1600	1550	1500	1450	1400	1350	1300
400	1800	1750	1700	1650	1600	1550	1500	1450	1400	1350	1300	1250	1200
600	1700	1650	1600	1550	1500	1450	1400	1350	1300	1250	1200	1150	1100
1000	1500	1450	1400	1350	1300	1250	1200	1150	1100	1050	1000	950	900

← Filter center position

Default

↑
Filter width

Table 4-2 CW WIDTH/SHIFT high cut amount (Hz)

■ IF filter

The IF filter consists of a DSP digital filter. If there is a HIGH signal outside the DSP filter band, the analog to digital converter input level may be saturated, and the filter does not work properly. Thus, an analog filter is inserted between the second IF (8.83MHz) and the third IF (455kHz) so that it does not impair the DSP filter properties. To operate each filter properly, there are three kinds of filters for each IF signal and also slope tuning is carried out.

1) Filters characteristics

Item	Rating
Nominal center frequency	73.05MHz
Pass bandwidth	±7.5kHz or more at 3dB
Attenuation bandwidth	±30kHz or less at 40dB
Ripple	1.0dB or less
Insertion loss	3.0dB or less
Guaranteed attenuation	70dB or more at fo + (500 to 1000kHz) 70dB or more at fo – (200 to 1000kHz)
Center frequency deviation	Within ±1.5kHz at 3dB
Terminating impedance	2kΩ ± 10%

MCF (L71-0401-05) : RF unit XF1

Item	Rating
Nominal center frequency	8830kHz
Center frequency deviation	Within ±150Hz at 6dB
Pass bandwidth	±1.5kHz or more at 6dB
Attenuation bandwidth	±1.9kHz or less at 20dB ±2.75kHz or less at 60dB ±3.5kHz or less at 80dB
Ripple	2dB or less
Insertion loss	6dB or less
Guaranteed attenuation	80dB or more in the range ±3.5kHz to ±1MHz
Terminating impedance	600Ω / 15pF

MCF (L71-0235-05) : RF unit XF2

Item	Rating
Nominal center frequency	8830kHz
Pass bandwidth	±3.0kHz or more at 6dB
Attenuation bandwidth	±16.0kHz or less at 60dB ±13.0kHz or less at 50dB
Guaranteed attenuation	70dB or more with in fo ± 1MHz (Without spurious in the range fo to fo+500kHz)
Ripple	Within 1.0dB
Insertion loss	Within 1.5dB
Terminating impedance	1850kΩ / 2pF

MCF (L71-0266-05) : RF unit XF3

Item	Rating
Nominal center frequency	8.400MHz
3dB attenuation bandwidth	Within 180 ± 40kHz
20dB attenuation bandwidth	400kHz or less
Insertion loss	9.0dB or less Formula : 20 x log [E1÷ (2 x E2)]
Ripple	1.0dB or less (within 3dB band)
Spurious attenuation	25dB or more (6.0 to 10.0MHz)
Voltage capacity	50V DC (1 minute)
Insulating resistance	100MΩ or more (100V DC)
Input and output impedance	330Ω

Ceramic filter (L72-0343-05) : RF unit CF500, 501

Item	Rating
Nominal center frequency	455kHz
6dB bandwidth	±3kHz (455kHz)
50dB bandwidth	±9kHz (455kHz)
Ripple	2dB or less (within 455+2kHz)
Insertion loss	6dB or less
Guaranteed attenuation	60dB or more (within 455±100kHz)
Input and output impedance	2.0kΩ

Ceramic filter (L72-0319-05) : Final unit CF451

Item	Rating
Center frequency	455±0.20kHz
6dB bandwidth	2.9 to 3.2kHz
60dB bandwidth	4.7kHz or less
Guaranteed attenuation	60dB or more at 0.1 to 1MHz
Spurious	40dB or more at 600 to 700kHz
6dB band ripple	2dB or less
Insertion loss	6dB or less
Input and output impedance	2kΩ

Ceramic filter (L72-0333-05) : Final unit CF452

Item	Rating
Nominal center frequency	455kHz
6dB bandwidth	±7.5kHz or more (455kHz)
50dB bandwidth	±15kHz or less (455kHz)
Ripple	3dB or less (within 455+5kHz)
Insertion loss	6dB or less
Guaranteed attenuation	35dB or more (within 455±100kHz)
Input and output impedance	1.5kΩ

Ceramic filter (L72-0366-05) : Final unit CF453

■ IF gain correction

The total gain changes when the AIP is turned ON or OFF or the band is 21.49MHz or higher. To limit the changes, the DSP corrects the IF gain. Table 2 lists the corrections. When the "AIP S-meter correction" on menu No.11 is turned ON, the S-meter is corrected when the AIP is turned ON. And since the IF gain is corrected greatly, the receiver internal noise output becomes large.

Frequency	Correction (dB)			Pre-amp gain (dB) reference
	AIP			
	OFF	ON1 (Menu 11 OFF)	ON2 (Menu 11 ON) SSB, CW, FSK only	
30kHz~ 21.49MHz	–2	0	+12	15
21.49MHz~ 30.MHz	–7	0	+12	21

Table 2 IF gain corrections

■ NB circuit

The noise blanker, like the conventional one, branches the signal before the narrow-band filter of the 8.83MHz second IF, and detects noise, and performs blanking using the second IF amplifier as a gate. The signal is amplified by Q28, detected by the AGC amplification and noise detection circuit consisting of Q29 to Q32 and D46, and then a blanking pulse is generated by the IC9 comparator. The noise detection circuit Q29 to Q32 and D46 is separated into segments by a jumper in the unit to prevent sneak path.

■ Slope tune

The operating principle of SSB-SLOPE-TUNE is explained first. When f_{LO1}, f_{LO3}, and f_{LO4} in Figure 4 are at their normal frequencies, the synthesized bandwidth is indicated by A. If the f_{LO1} frequency is increased by $\Delta f1$ and the f_{LO3} frequency is decreased by $\Delta f1$, the filter of the 8.83MHz band shifts to position B. The synthesized bandwidth is indicated by the section overlapped by A and B. When the frequencies of f_{LO1} and f_{LO3} are lowered by $\Delta f2$, only the 455kHz second IF filter shifts to position C. The synthesized bandwidth is indicated by the section overlapped by B and C.

Therefore, high frequencies are cut off by increasing the f_{LO1} frequency and decreasing the f_{LO3} frequency. Low frequencies are cut off by decreasing the f_{LO3} and f_{LO4} frequencies. The TS-870S enables these operations using the DSP filter.

In SSB mode, slope tune high cut/low cut is switched by using the filter select control : in CW mode, the WIDTH (bandwidth)/SHIFT (center frequency) is changed, and in FSK mode, the WIDTH (bandwidth) is changed. The microcomputer in the control unit sends filter select data to the DSP, and slope tuning is carried out by changing frequency data given to the PLL and DDS. The second IF (8.83MHz) and third IF (455kHz) filters are selected to carry out slope tuning effectively. Tables 3 and 4 list filter selections, slope tuning and analog filter high cut/low cut amounts. Slope tuning low cut/high cut can be switched in AM mode, and the WIDTH can be switched in FM mode by using DSP filters only, and the analog filter is fixed to 15kHz.

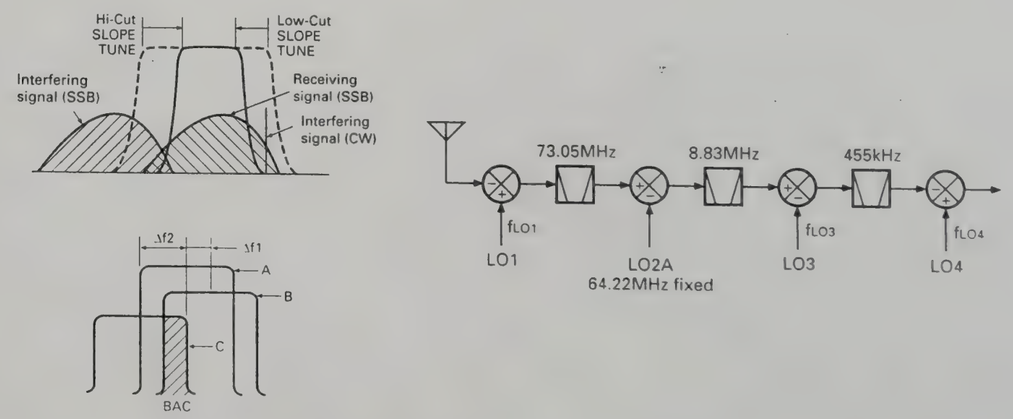

Fig. 4 SSB slope tune operating principle

CIRCUIT DESCRIPTION

	1.4k	1.6k	1.8k	2.0k	2.2k	2.4k	2.6k	2.8k	3.0k	3.4k	4.6k	6.0k
0 (Hz)	1.0k	0.8k	0.6k	0.4k	0.2k	0.0k	1.4k	1.2k	1.0k	0.6k	0.0k	0.0k
50	↑	↑	↑	↑	↑	↑	↑	↑	↑	↑	↑	↑
100	↑	↑	↑	↑	↑	↑	↑	↑	↑	↑	↑	↑
200	↑	↑	↑	↑	↑	↑	−0.2k	↑	↑	↑	↑	↑
300	↑	↑	↑	↑	↑	↑	↑	↑	↑	↑	↑	↑
400	↑	↑	↑	↑	↑	↑	↑	−0.4k	↑	↑	↑	↑
500	↑	↑	↑	↑	↑	↑	↑	↑	↑	↑	↑	↑
600	↑	↑	↑	↑	↑	↑	↑	↑	−0.6k	↑	↑	↑
800	↑	↑	↑	↑	↑	↑	↑	↑	↑	↑	−0.6k	↑
1000	↑	↑	↑	↑	↑	↑	↑	↑	↑	−1.0k	↑	↑

← High cut position

Filter selection
- 3kHz filter
- 6kHz filter
- 15kHz filter
- Default

↑
Low cut posotion
(455kHz filter) Low cut amount

(8.83MHz filter) High cut amount

Table 3 SSB slop tuning and analog filter high/low cut (Hz)

	400	450	500	550	600	650	700	750	800	850	900	950	1000
50 (Hz)	375	425	475	525	575	625	675	725	775	825	875	925	975
100	350	400	450	500	550	600	650	700	750	800	850	900	950
200	300	350	400	450	500	550	600	650	700	750	800	850	900
400	200	250	300	350	400	450	500	550	600	650	700	750	800
600	100	150	200	250	300	350	400	450	500	550	600	650	700
1000	−100	−50	0	50	100	150	200	250	300	350	400	450	500

← Filter center position

Default

↑
Filter width

Table 4-1 CW WIDTH/SHIFT low cut amount (Hz)

	400	450	500	550	600	650	700	750	800	850	900	950	1000
50 (Hz)	1975	1925	1875	1825	1775	1725	1675	1625	1575	1525	1475	1425	1375
100	1950	1900	1850	1800	1750	1700	1650	1600	1550	1500	1450	1400	1350
200	1900	1850	1800	1750	1700	1650	1600	1550	1500	1450	1400	1350	1300
400	1800	1750	1700	1650	1600	1550	1500	1450	1400	1350	1300	1250	1200
600	1700	1650	1600	1550	1500	1450	1400	1350	1300	1250	1200	1150	1100
1000	1500	1450	1400	1350	1300	1250	1200	1150	1100	1050	1000	950	900

← Filter center position

Default

↑
Filter width

Table 4-2 CW WIDTH/SHIFT high cut amount (Hz)

CIRCUIT DESCRIPTION

■ Local signals (LO1, LO3, LO4)

1) LO1

Table 5 lists LO1 frequency configuration.

DDS1 varies from 0.46 to 1.46MHz, and when the display frequency is multiple MHz (for example, 14.000MHz), 0.96MHz is output. When the display frequency is increased, the DDS1 frequency is reduced by the amount of change. When the DDS1 frequency is reduced to 0.46MHz, the frequency is switched to 1.46MHz, and when it is increased to 1MHz, the frequency returns to 0.96MHz (Figure 5). By changing the 1MHz band in synchronization with the display frequency, the 1MHz comparison PLL circuit is locked and LO1 is generated.

In Table 5, the 0.96MHz base indicates the DDS output when the frequency is multiple MHz. The frequency (UNV) indicates the decimal digits of the MHz frequency. (If the display frequency is 14.2MHz, (UNV) = 0.2MHz.) DDS is switched by 500kHz, so – 0.5MHz ≤ (UNV) < 0.5MHz.

As described in the slope tuning section, slope tuning high-cutting is corrected for LO1, so the correction is added to the DDS output. SSB H in Table 5 indicates the correction. Table 3 shows the actual correction of SSB H. (For example, when the high frequency is 2.2kHz, the correction SSB H is 0.2kHz.)

Since RIT and XIT change the receive and transmit frequencies by the preset amount, it needs to be corrected. They are D RIT and D XIT in Table 5.

The "8.83MHz window-joining" (D 883) in Table 5 is determined during adjustment. For example, the equation for calculating the DDS output frequency for 14.2MHz USB. The high-cut frequency is assumed to be 2.6kHz. (D 833 is zero.)

DDS1 : 0.96M – (UNV) – (OFS SSB) + (SSB H)
= 0.96M – 0.2M – 1.2k – 0.2k
= 758.6kHz
0.96M : Base
UNV : 14.2M – 14.0M = 0.2M
OFS SSB (Filter offset) : 1.2k
SSB H (Slope HI) : –0.2k (See table 3.)

The LO1 output frequency f_{LO1} is calculated from the frequency configuration in Figure 6.

$f_{LO1} = f_{PLL\ IN} + 60MHz - (4MHz + f_{DDS1})$
$= 32MHz + 60MHz - (4MHz + 758.6kHz)$
$= 87.2414MHz$

Where $f_{PLL\ IN}$ is the PLL input frequency and f_{DDS1} is the DDS1 output frequency.

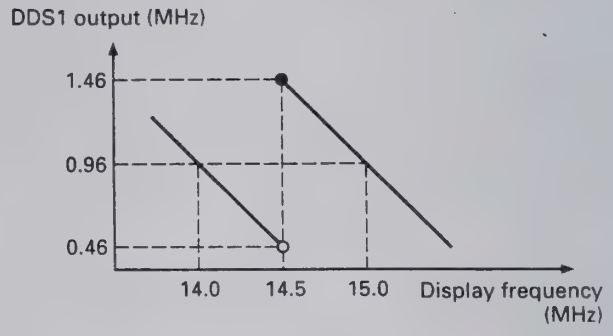

Fig. 5 Relationship between display frequency and DDS output frequency

2) LO3

Table 6 lists the LO3 frequency configuration.

The LO3 frequency is 8.375MHz, and is generated by the chopper circuit. The DDS2 output frequency is 1.625MHz. For LO3, slope tuning low-cut/high-cut is corrected. SSB H and SSB L in Table 6 indicate the corrections. D 833 and D 455 are values determined during filter window-joining and adjustment.

For example, if USB is 14.2MHz, high-cut frequency is 2.6kHz, and low-cut frequency is 300Hz, the LO3 frequency is calculated as follows. It is assumed that D 833 and D 455 are zero.

$f_{LO3} = 1.625MHz + (SSB\ H) + (SSB\ L)$
$= 1.625MHz + (-0.2kHz) + 300Hz$
$= 1625.1kHz$

CIRCUIT DESCRIPTION

3) LO4

Table 7 lists the LO4 frequency configuration.

For LO4, correction (OFS SSB) is carried out so that a signal passes through a filter according to the mode, and the slope tune low-cut (SSB L) is corrected. The mode offset is the frequency (11.30859375kHz) used for processing by the DSP, and its sign changes with the mode.

For example, if USB is 14.2MHz and the low-cut frequency is 300Hz, the LO4 output frequency is calculated as follows.

f_{LO4} = 455kHz + (mode offset) + (OFS SSB) + (SSB L)
= 455kHz + 11.30859375kHz + 300Hz
= 467.8085938kHz

The filter is corrected according to each mode by LO1 and LO4, slope tuning high-cut is corrected by LO1 and LO3, and low-cut is corrected by LO3 and LO4.

In other modes, each local frequency is determined by the calculation method as shown previously in Tables 5 to 7.

Component	DDS1 (1HZ)															
	LSB		USB		CW		CW-R		FSK		FSK-R		AM		FM	
	RX	TX	RX	TX	RX	TX	RX	TX	RX	TX	RX	TX	RX	TX	RX	TX
BASE	0.96MHz*6															
Frequency (100kHz or less)	– (UNV)															
Mode offset																
Filter offset*1	+ (OFS SSB)	+2k	– (OFS SSB)	–2k	–800		+800									
CW pitch					+ (PITCH)		– (PITCH)									
FSK tone (H/L)																
FSK shift (polarity)																
RIT	– (D RIT)		– (D RIT)		– (D RIT)		– (D RIT)		– (D RIT)		– (D RIT)		– (D RIT)		– (D RIT)	
XIT		– (D RIT)		– (D RIT)		– (D RIT)		– (D RIT)		– (D RIT)		– (D RIT)		– (D RIT)		– (D RIT)
Slope high*2, 3	– (SSB H)		+ (SSB H)		+ (CW H)		– (CW H)		– (FSK H)		+ (FSK H)					
Slope low																
8.83MHz window-joining*4, 5	– (D 883)			+ (D 883)												
455kHz window-joining																

*1 : Although receiver data has an independent value for each mode, the data area for calculation is D OFFSET.
Transmitter data is fixed because the 8.83MHz filter bandwidth is fixed.

*2 : Although it has an independent value for each mode, the data area for calculation is D SLOP L.

*3 : The slope low-cut is carried out at 455kHz and high-cut is carried out at 8.83MHz.

*4 : The LSB and USB may have the same value because the filter bandwidth is wide.

*5 : The positive direction for adjustment is the direction in which the receive carrier frequency increases.

*6 : The DDS1 variable frequency is 1.45MHz and is shifted by 500kHz.

Table 5 LO1 frequency configuration

CIRCUIT DESCRIPTION

Component	DDS2 (LO3)															
	LSB		USB		CW		CW-R		FSK		FSK-R		AM		FM	
	RX	TX	RX	TX	RX	TX	RX	TX	RX	TX	RX	TX	RX	TX	RX	TX
BASE	1.625MHz*6															
Mode offset																
Filter offset																
CW pitch																
FSK tone (H/L)																
FSK shift (polarity)																
RIT/XIT																
Slope high*1, 3	– (SSB H)		+ (SSB H)		+ (CW H)		– (CW H)		– (FSK H)		+ (FSK H)					
Slope low*2, 3	– (SSB L)		+ (SSB L)		+ (CW L)		– (CW L)		– (FSK L)		+ (FSK L)					
8.83MHz window-joining*4, 5	– (D 883)			+ (D 883)												
455kHz window-joining*4, 5	+ (D 455)			– (D 455)												

*1 : Although it has an independent value for each mode.

*2 : Although it has an independent value for each mode.

*3 : The slope low-cut is carried out at 455kHz and high-cut is carried out at 8.83MHz.

*4 : The LSB and USB may have the same value because the filter bandwidth is wide.

*5 : The positive direction for adjustment is the direction in which the receive carrier frequency increases.

*6 : Since the DDS2 output frequency is high, 1.625MHz (10MHz – output frequency (8.375MHz)) is output to the DDS.

Table 6 LO3 frequency configuration

Component	DDS3 (LO4)															
	LSB		USB		CW		CW-R		FSK		FSK-R		AM		FM	
	RX	TX	RX	TX	RX	TX	RX	TX	RX	TX	RX	TX	RX	TX	RX	TX
BASE	455kHz															
Mode offset (kHz)	–11.30859375		+11.30859375		+11.30859375		–11.30859375		–11.30859375		+11.30859375		+11.30859375		+11.30859375	
Filter offset*1	– (OFS SSB)	–2k	+ (OFS SSB)	+2k	+800		–800									
CW pitch																
FSK tone (H/L)									–2125 /–1275		+2125 /+1275					
FSK shift (polarity)											+ (FSK S)	+ (FSK S)				
RIT/XIT																
Slope high																
Slope low*2, 3	– (SSB L)		+ (SSB L)		+ (CW L)		– (CW L)		– (FSK L)		+ (FSK L)					
8.83MHz window-joining																
455kHz window-joining*4, 5	– (D 455)			+ (D 455)												

*1 : Although receiver data has an independent value for each mode.
Transmitter data is fixed because the 8.83MHz filter bandwidth is fixed.

*2 : Although it has an independent value for each mode.

*3 : The slope low-cut is carried out at 455kHz and high-cut is carried out at 8.83MHz.

*4 : The LSB and USB may have the same value because the filter bandwidth is wide.

*5 : The positive direction for adjustment is the direction in which the receive carrier frequency increases.

Table 7 LO4 frequency configuration

CIRCUIT DESCRIPTION

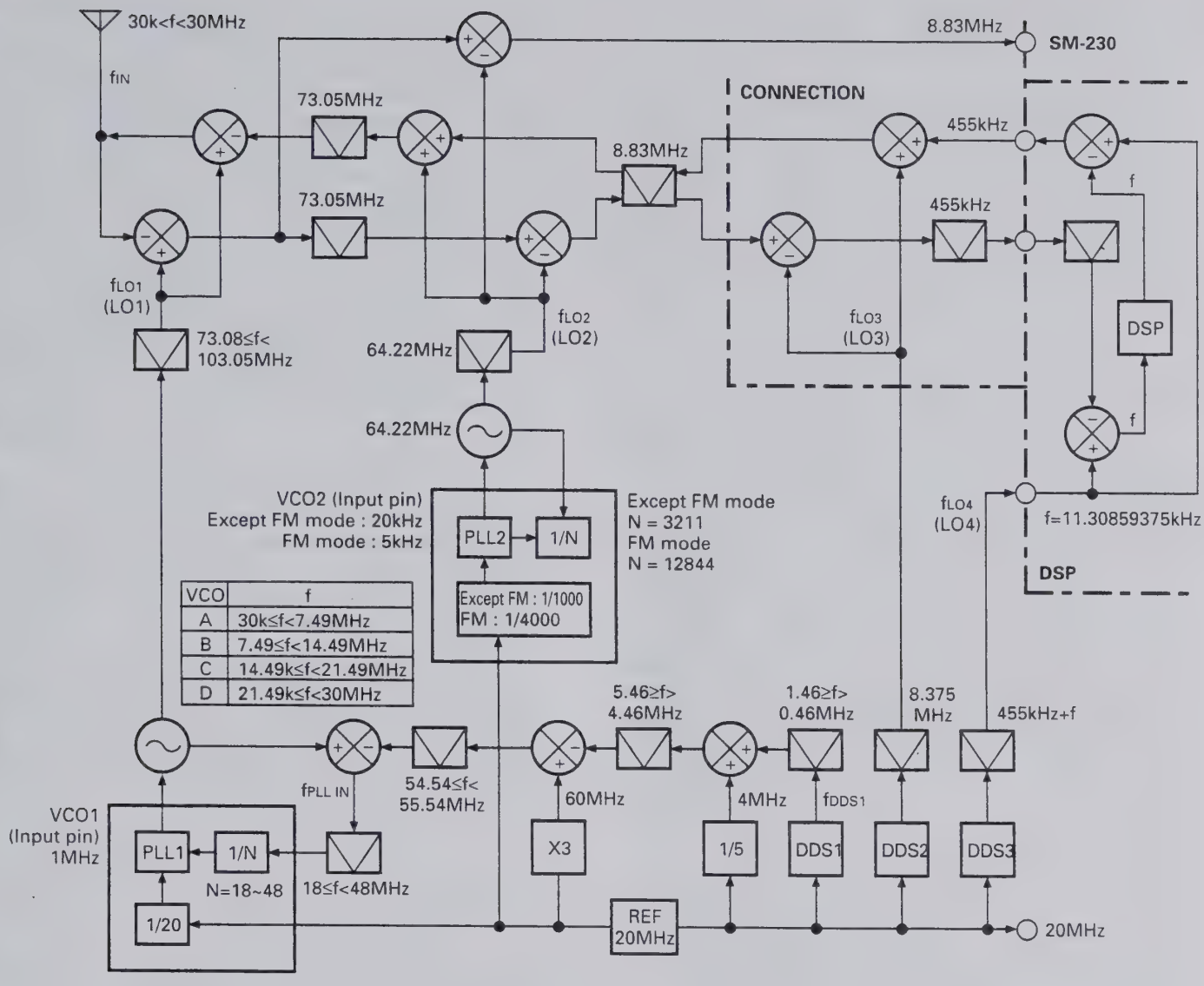

Fig. 6 Frequency configuration

CIRCUIT DESCRIPTION

Transmitter Circuit

The transmitter system block diagram is shown in Figure 7.

The TS-870S has the same frequency configuration as the TS-850 after the DSP generates the IF signal and converts it to 455kHz as a basic configuration.

A difference from the conventional model other than DSP modulation is that the TS-870S uses a digital-to-analog converter and a microcomputer for various controls. This allows for fine control and reduces the number of controls needed for adjustment.

The TIF (second IF) signal output from the TX-RX unit goes to the final unit (C/5 connection section). The signal is converted from 455kHz to 8.83MHz. The 8.83MHz third IF signal converted by the Q470 and Q471: 3SK131(M) mixer is switched to the transmitter by the D450 diode switch, and output from CN412 to the RF unit (A/9 RF section) as TR88 signal.

The signal input to CN10 of the RF unit is passed through the 8.83MHz IF filter used for both transmission and reception. During transmission, XF3 BW: 5kHz is selected by D69 and D67 and the filter attenuates the components outside the band. The transmit signal switched by D68 is amplified and ALC-controlled by the Q39 ALC amplifier, and the resulting signal goes to the D49 TX gain control circuit. This circuit controls the gain at the transmission stage according to the given voltage via a variable attenuator of a pin diode. The control voltage is controlled by a microprocessor, and is used to set the gain for each band or set the gain with the PWR knob and mode.

The third IF signal is then converted to the 73.05MHz fourth IF signal by the Q37 and Q38 : 3SK131(M) mixer. The signal is passed through the LC filter, and is converted to the target frequency by the final local oscillator LO1 at the Q35 and Q36 : 3SK184(R) mixer. The signal is passed through the radiation filter and the band-pass filter used by both the transmitter and receiver sections to attenuate the spurious outside the band. The band-pass filter output is amplified by Q5 : 2SC2954, and output to the final unit (A/5 final section) from CN4 as the drive signal.

■ TX-AGC

The DSP controls the input level until it starts modulation. It is like AGC applied to the microphone amplifier, and when the input level exceeds the certain level, the amplifier gain decreases to keep the modulator input level constant, i.e., to keep the IF output constant.

The MIC gain control in SSB and AM modes is used to adjust the maximum gain of the AGC amplifier in the 40dB range. Even if the control is set maximum, the input level to the modulator is kept constant. If the PROC is OFF in SSB mode, the CAR level (TIF output level) is fixed, and the ALC effect is limited. If the PROC is ON in SSB mode, the ALC effect is adjusted by the CAR control. The microphone amplifier gain is fixed, but the speech processor input level is controlled by the AGC and then becomes the level set by the PROC control.

In FM mode, the microphone amplifier sensitivity can be changed to high or low by using Menu No.61. Since the frequency deviation is limited by the TX-AGC, it is not distorted extremely like in the clipper method. In AM mode, the sensitivity is controlled so that modulation does not exceed 70%.

The TX-AGC is required to stabilize the DSP modulator operation. The modulator may operate without using the AGC by reduction of the gain and input level, but it cannot be completely turned OFF. Care must therefore be taken when measuring the ALC properties and frequency characteristics.

CIRCUIT DESCRIPTION

AT Unit (Auto Antenna Tuner)

When the AUTO/THROUGH switch is set to AUTO, ATA goes LOW, the AUTO/THROUGH switching relay K1 is executed, and AT is inserted to prepare for tuning. If "RX AT ON" is set in menu No.8, AT is inserted during reception. If the position of variable capacitor VC1 or VC2 is not the preset position of the band, presetting is performed. The AT tune and transmission do not occur until presetting ends.

When AT TUNE is turned on with this condition, ATS goes HIGH, the CW mode is set, and the transmission output becomes about 10W. If the SWR is lower than 1.2, the tuning is completed and auto antenna tuning ends. If the SWR is greater than 1.2, the motor control pulse duty (described later) is controlled according to the SWR.

The SWR can be set to 1.6 after AT tuning by turning menu No. 33 "TUNE WIDE" ON.

The motor speed is determined by a microcomputer. Its direction is controlled by phase comparator IC1 and amplitude comparator IC6 if the APRE is LOW, and controlled by the microcomputer if the APRE is HIGH.

■ Auto tuning mode

The transmission power from the final section via the filter section is passed through the current/voltage detection transformer L1 and L2, which use a troidal core. The current and voltage components detected here are rectified by the waveform rectification circuit consisting of D4, D7, Q1, and Q2, and then the phase is compared by IC1. The output signals ($\bar{Q}$ and Q) from pins 8 and 9 of IC1 are passed through the switch by IC2 and are applied to motor drive IC IC4. Variable capacitor VC1 is rotated by the motor M1 so that the phase difference of the voltage and current components decreases.

The voltage and current components detected by L1 and L2 are rectified by diodes D1 and D2 and are applied to the comparator of voltage comparison circuit IC6 as the amplitude component. The comparator output is passed through switch IC3. Motor M2 is driven by another motor drive IC IC5 and variable capacitor VC2 is rotated in the direction that decreases the amplitude difference of the voltage and current components.

Variable capacitor VC1 for capacity adjustment is therefore controlled so that the current and voltage phases match. Variable capacitor VC2 for resistance adjustment is controlled so that the current and voltage amplitude difference decreases. SWR becomes 1 when the phases match and the amplitude difference is zero.

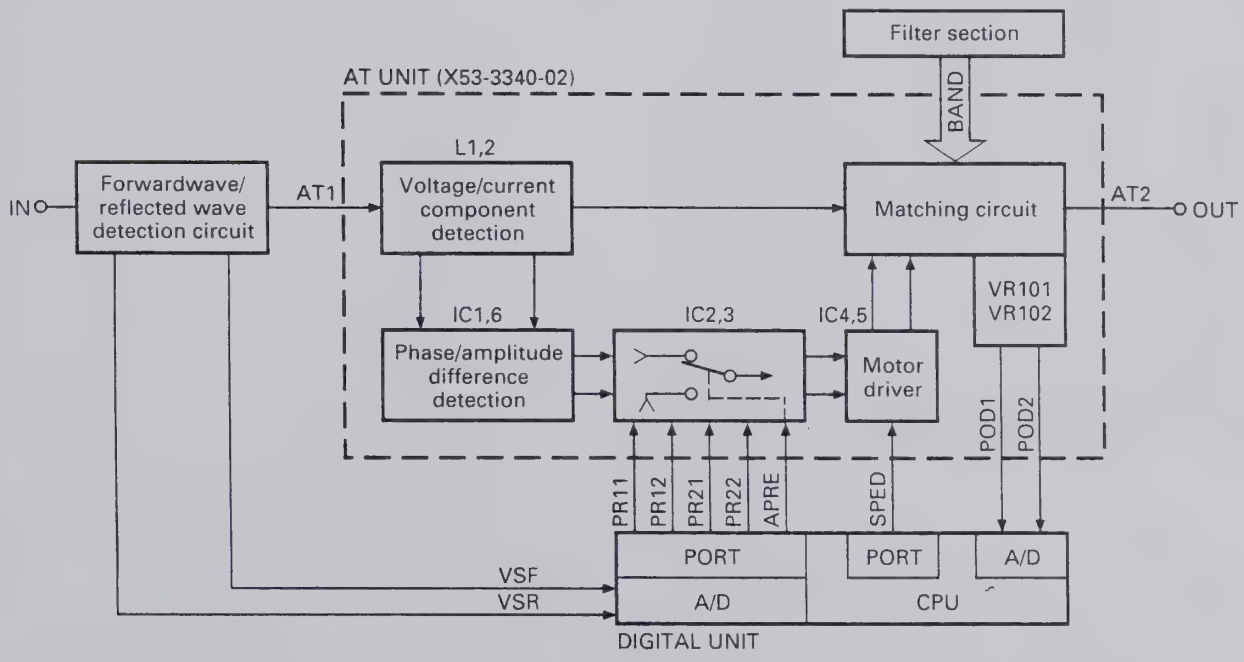

Fig. 9 AT unit block diagram

CIRCUIT DESCRIPTION

The speeds of motors M1 and M2 are determined by the duty cycle of the pulse input to control input pin 8 of IC4 and IC5, and controlled by the standing wave ratio (SWR) calculated by the control unit CPU.

Pulse signal SPED output from the control unit is passed through Q5 : DTC114EK, amplified by Q4, and input to IC4 and IC5 as a control pulse.

If the SWR is 2 or more, the duty cycle of the motor drive voltage pulse is 100%. If the SWR is 1.5 to 2, the duty cycle becomes approx. 80%. If the SWR is less than 1.5, the duty ratio becomes approx. 50% and the motor runs at low speed.

The matching circuit is T type, and the tap position from 1.8 to 30MHz is switched by seven relays K101 to K103 and K105 to K108.

Position detection volumes VR101 and VR102 are linked to the rotation axes of variable capacitors VC1 and VC2 with a gear ratio of 1 : 1. The voltages of 0 to 5V (POD1 and POD2) are generated according to the capacities of the variable capacitors. This position voltage data is sent to the microprocessor in the control unit through the analog to digital converter, and is used as the reference voltage in the feedback control system, such as for preset tuning. The same signal is also used for presetting data and end-detection.

The volume used by the TS-870S is a normal one, not an endless one. Since the rotation angle of this volume is limited, the rotation range is from the minimum capacity to the maximum capacity plus allowance.

By this control, like the preset tuning, which will be described later, POD1 and POD2 are monitored by the microprocessor. If the lower limit voltage of 0.6V or the upper limit voltage of 4.2V is reached, the microprocessor detects that the voltage is close to a limit. To return the voltage to the opposite side, APRE is made HIGH. If the variable capacitor is VC1, and the voltage is close to the lower limit in respect to POD1, the voltage near the upper limit is output. If the voltage is close to the upper limit in respect to POD1, the voltage near the lower limit is output.

The other variable capacitor VC2 outputs the voltage read by POD2 as it is. If the variable capacitor voltage exceeds the specified limit, it returns to the other limit. The other variable capacitor remains in the same position.

If the APRE is HIGH, the motor rotation direction is determined by the CPU unless auto tuning is performed.

The logic for PR11 to PR22 is the same as for IC4 and IC5 : BA6109U2. The signal output from the digital unit passes through IC2 and IC3 : TC4066BP and enters IC4 and IC5.

		PR11	PR12	PR21	PR22
Motor 1	Normal rotation	H	L	–	–
	Reverse rotation	L	H	–	–
Motor 2	Normal rotation	–	–	H	L
	Reverse rotation	–	–	L	H

■ Preset tuning

When tuning ends, the position of the variable capacitor is stored in memory by the microprocessor as preset data for that band.

When the band is changed after tuning is performed in another band, APRE goes HIGH, the motor is controlled by the microprocessor, and preset tuning is performed. During preset tuning, auto tuning or signal transmission is inhibited even if the AT TUNE switch is pressed or transmission becomes ready.

The initial preset-data when the microprocessor is reset includes standard data for a 50-ohm load on each band.

■ Preset memory band

30kHz ≤ f
1.850MHz ≤ f
2.010MHz ≤ f
3.525MHz ≤ f
3.575MHz ≤ f
3.725MHz ≤ f
4.490MHz ≤ f
7.030MHz ≤ f
7.100MHz ≤ f
7.490MHz ≤ f
10.490MHz ≤ f
14.100MHz ≤ f
14.490MHz ≤ f
20.990MHz ≤ f
21.150MHz ≤ f
21.990MHz ≤ f
25.490MHz ≤ f
29.000MHz ≤ f

CIRCUIT DESCRIPTION

Standby Control and Timing

Standby control and timing are carried out by using software for the main CPU in the control unit (X53-356X-XX). The control signals for the control unit are listed below. (See Figure 10 for each timing chart.)

SS : Standby switch input signal. Active LOW.
KEY : Keying input signal from the keyer. Active LOW.
TXC : Transmission output signal. Active HIGH. Same timing as TXB.
RXC : Reception output signal. Active HIGH. Same timing as RXB.
CKY : Output signal. Active HIGH.

With the SS line

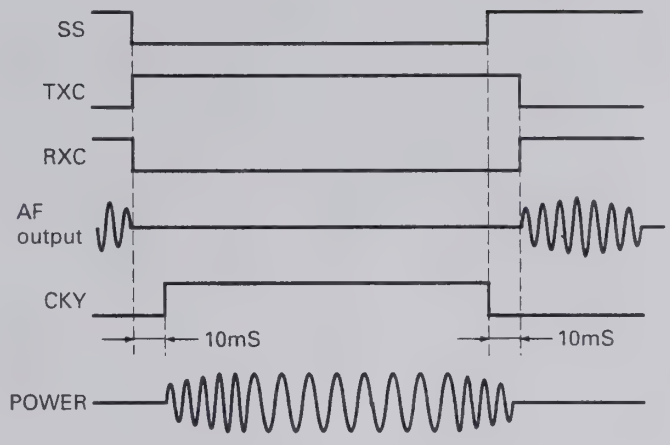

By full break-in

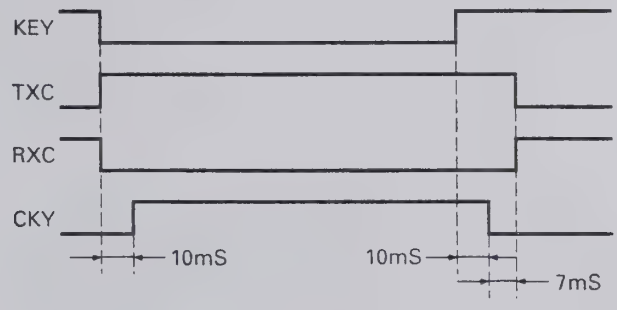

by semi break-in

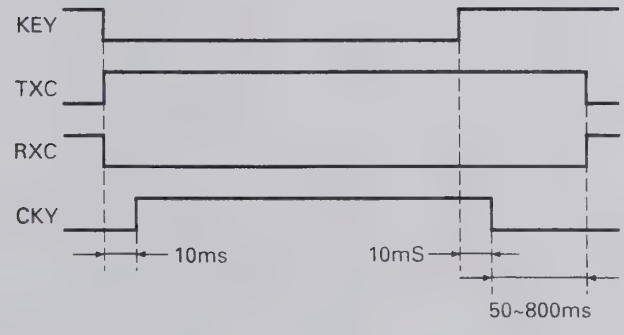

Fig. 10 Transmit/receive signal timing chart

CIRCUIT DESCRIPTION

Digital Control Unit

The TS-870S digital control circuit has a multiple chip configuration centered around the main CPU (IC6 : M37702S4BFP), and consists of a 64K ROM (IC12 : 27C512RJLVC), an 8K RAM (IC8 : LC3564QME-10), and an extended I/O (IC16, IC22, IC23 : CXD1095Q). This circuit controls about 60 different input and about 80 different output signals.

Figure 11 is a digital control block diagram.

■ Address control

The main CPU operates in the microprocessor mode in which the external ROM is used. The memory is configured as shown in the memory map, and the main CPU A12 to A15 and D0 signals and IC14, IC17, IC18, and IC19 are used to generate a chip select (CS) signal to select and access an IC. (Figure 12)

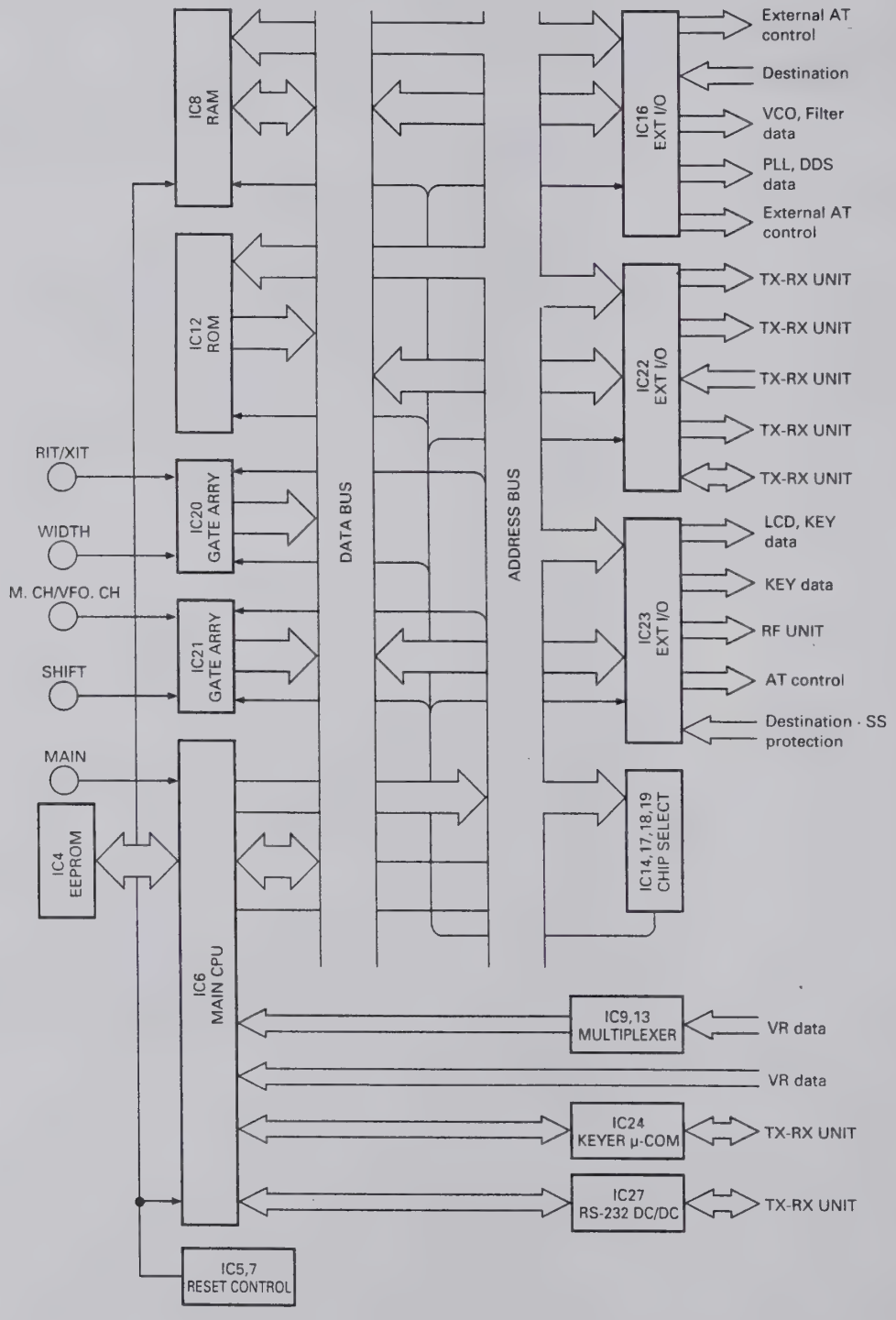

Fig. 11 Digital control block diagram

CIRCUIT DESCRIPTION

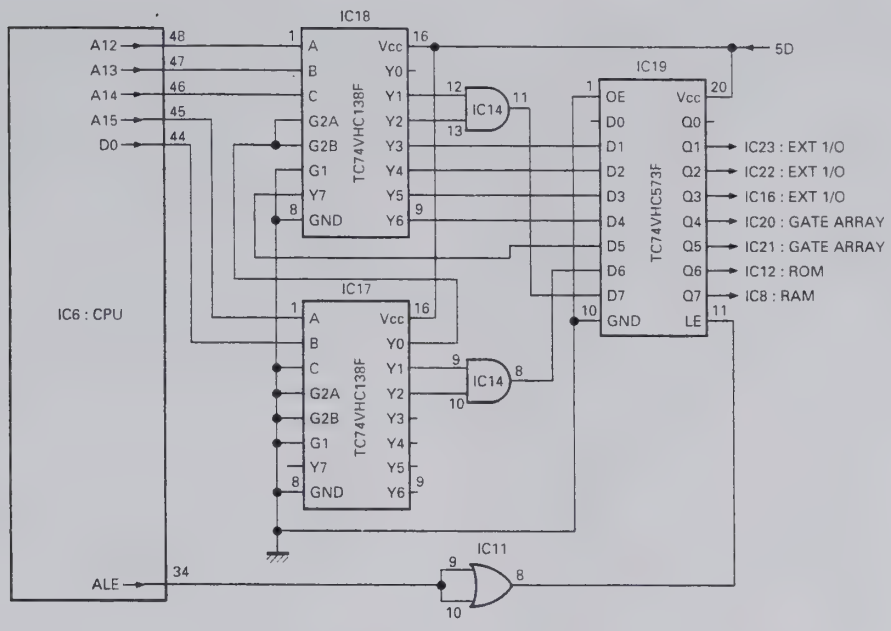

Fig. 12 Address control circuit

■ Encoder circuit

The main encoders are magnetic rotary encoders, and the click, RIT, SHIFT, and WIDTH encoders are contact-type rotary encoders.

The main encoder pulses are read directly by the main CPU.

The other encoder pulses enter the gate array (IC20 and IC21 : LZ92K371), and are read through the main CPU data bus. The gate array is selected by the latch (IC19 : TC74VHC573F) Q4 and Q5. The CK1, CK2 or CK3, CK4 encoder is selected by A0 of the gate array. Encoder data is output to D0 to D7 by making the read signal (RD) LOW when the chip select (CS) signal is LOW. IC25 and IC26 absorb encoder pulse chattering. (Figure 13)

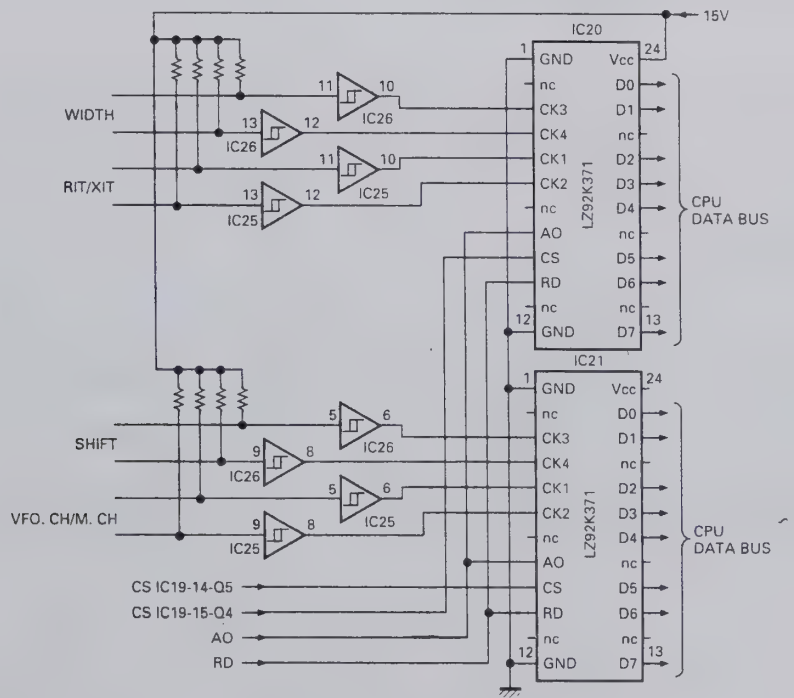

Fig. 13 Encoder circuit

CIRCUIT DESCRIPTION

■ System reset and RAM backup

The power monitor circuit (Q1, Q2, D4, D5, R6) monitors the power supply voltage. If the voltage is LOW, the circuit outputs a LOW signal to the INT1 port of the main CPU and the IRQ2 port of the microprocessor in order for the electronic keyer to stop operation. At the same time, the battery backup IC (IC5 : MB3780A) backs up the RAM with a lithium battery.

If the power supply voltage becomes normal, a HIGH signal is input to the INT1 port and the IRQ2 port, and the main CPU is initialized by the battery backup IC after the time constant set by C56 and C57. The operation resumes and power is supplied to the RAM from the outlet. (Figure 14)

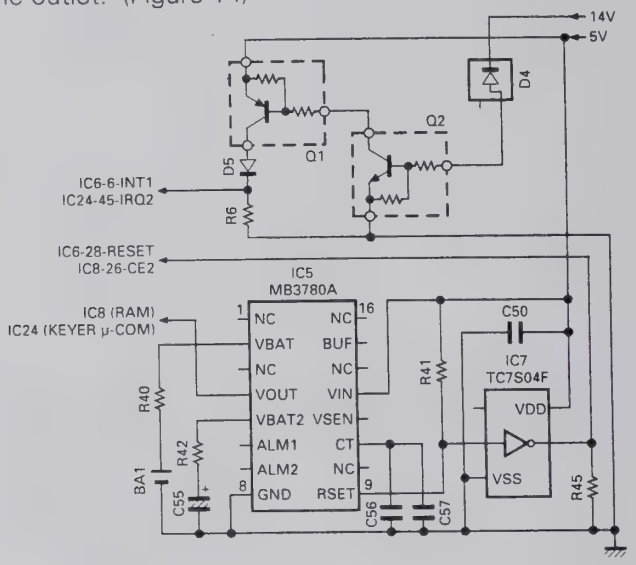

Fig. 14 System reset and RAM backup

■ Analog Signal Input

The main CPU incorporates an 8-channel analog-to-digital (A/D) converter, and in addition, has a multiplexer (IC9 and IC13 : TC4052BF) for entering 16-channel analog signals. Incoming analog signals are converted by the main CPU to digital values, which are used as digital data.

■ Display

Since the TS-870S uses a negative LCD and a fluorescent display tube.

The LCD is lighted with half a duty by the LCD driver, and the fluorescent display tube is lighted by an inverter.

The LCD driver data is set by the clock signal (UCK1), data signal (UDA1), and enable signals (ENL2, ENL3). The blanking signal (BLANK) turns the LCD driver OFF, and the dimmer signal (DIM) changes the inverter duty for dimmer.

■ Key scan

The PB0 and PB7 of IC23 and O2 to O8 of IC501 form a keyboard matrix. A key scan signal (a negative pulse) is output from the O2 to O8. One column corresponding to the PB0 and PB7 is selected, and the state of that switch is read. When the switch at the intersection of the matrix is pressed, the PBx port bit goes LOW. Thus, which switch is pressed can be detected. The key chattering is eliminated by software. (Figure 15)

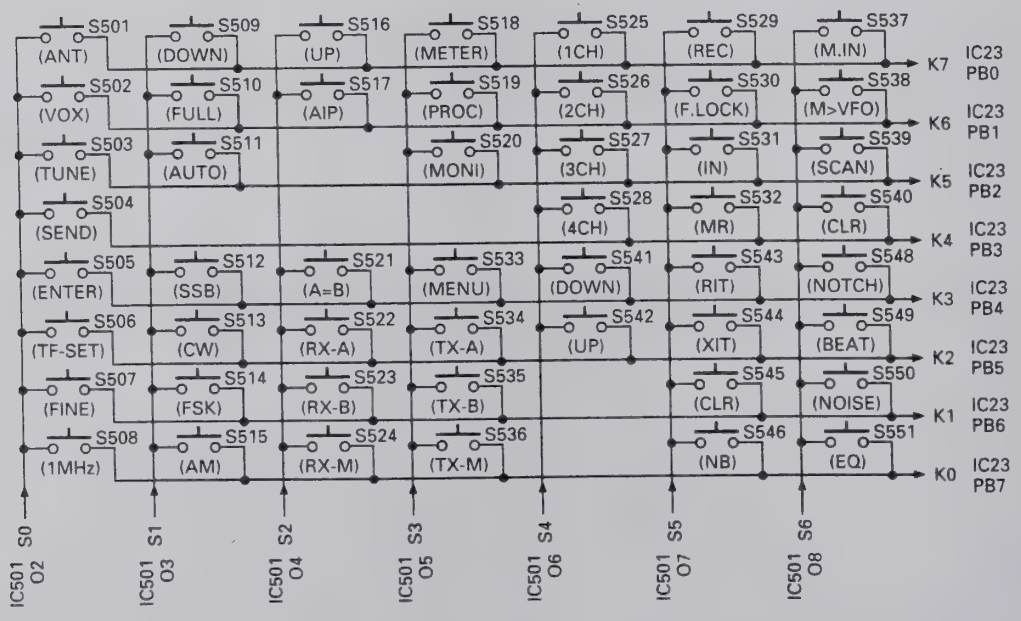

Fig. 15 Key scan circuit

CIRCUIT DESCRIPTION

■ PLL and DDS data

The TS-870S has three PLLs and three DDSs in the PLL section in the RF unit. The main CPU sends data to the PLL ICs and DDS ICs according to the displayed frequency. The PLL ICs provide unlock (UNL) signals. If one of the PLLs should unlock, the display indicates that the PLL is unlocked (Err-FE).

The TX-RX unit also has a PLL IC, to which the main CPU sends 46.32MHz data. The PLL IC also outputs an unlock signal (PLUL), and if a PLL is unlocked, an unlock message (Err-FD) is displayed.

■ AT control

The AT control inputs the variable capacitor position data (POD1, POD2, analog data input), forward wave voltage and reflected wave voltage (VSF, VSR, analog data input) for SWR calculation in the main CPU, and outputs the motor normal/reverse rotation control (PR11, PR12, PR21, PR22), motor speed control signal (SPED), and motor control switching signal (APRE).

SPED switches the motor rotation ON and OFF during AT tune and presetting by PWM with the duty cycle related to the SWR value.

APRE changes the motor normal/reverse rotation control to analog control for AT tune, and to digital control for presetting.

PR11 to PR22 control the motor normal/reverse rotations and stop when the motor normal/reverse control signal is controlled digitally. (Figure 16)

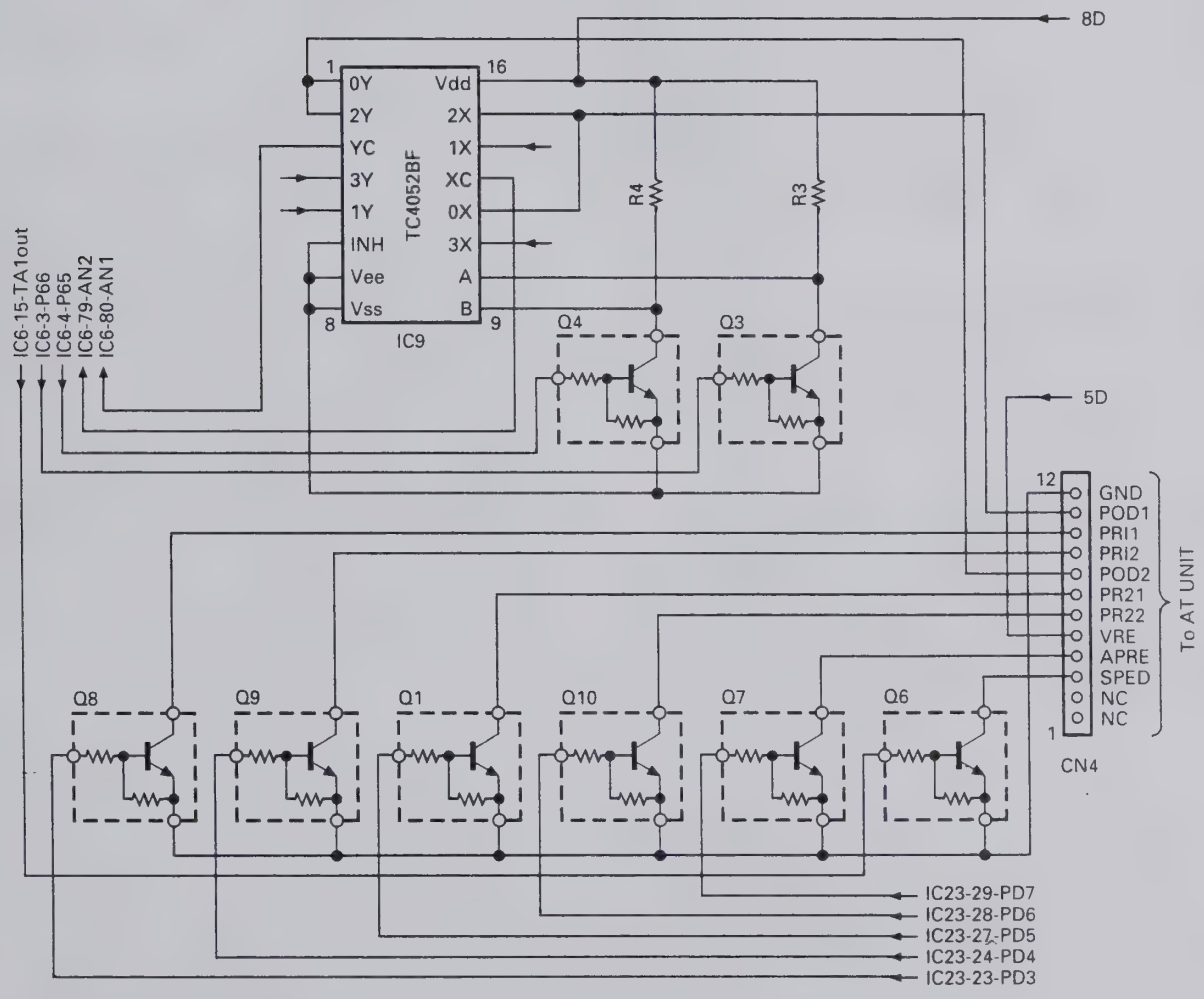

Fig. 16 AT control

CIRCUIT DESCRIPTION

■ IF filter switching

The IF filter switching signal from the control unit is controlled by PC0 to PC2 (pins 11 to 13) of IC23 and sent to the RF unit and final unit connection section.

The RF unit selects the 8.83MHz IF filter, and the final unit connection section selects the 455kHz IF filter.

The IF filter select signal is automatically interlocked with the WIDTH control.

SSB		CW		FSK		AM		FM	
WIDTH	IF FILTER	WIDTH	IF FILTER	WIDTH	IF FILTER	WIDTH	IF FILTER	WIDTH	IF FILTER
1.4k	3k	50	3k	250	3k	5.0k	6k	5.0k	15k
1.6k	↑	200	↑	500	↑	6.0k	15k	6.0k	↑
1.8k	↑	300	↑	1.0k	↑	8.0k	↑	8.0k	↑
2.0k	↑	400	↑	1.5k	↑	10.0k	↑	10.0k	↑
2.2k	↑	600	↑			12.0k	↑	12.0k	↑
2.4k	↑	1.0k	↑			14.0k	↑	14.0k	↑
2.6k	6k								
2.8k	↑								
3.0k	↑								
3.2k	↑								
3.4k	↑								
4.6k	↑								
6.0k	15k								

Table 9 IF filter selection

■ Receive band-pass filter selection

The RF BPF signal from the control unit is sent from PC6 (pin 17) of IC23 to the RF unit as serial data. The serial-to-parallel converter (TC9174F) in the RF unit converts serial data to parallel data and switches between band-pass filters.

■ Transmit low-pass filter selection

The LPF signal from the control unit is sent as serial data from PC1 (pin 12) of IC16 to the final unit filter section via the final unit connection section. The serial-to-parallel converter (TC9174F) in the final unit filter section converts serial data to parallel data and switches between low-pass filters.

■ PLL VCO data

The RF unit PLL section switches between VCOs according to the VCO band data (VB0 to VB3) output from PC4 to PC7 (pins 15 to 18) of IC16 in the control unit.

■ Electronic keyer

The TS-870S uses a dedicated IC (IC24 : 68HC05G2419553) to control the electronic keyer. The main CPU CH1 to CH4 signals switch operations to the electronic keyer IC (keyer microprocessor).

The keyer microprocessor controls the electronic keyer according to KEY SPEED VR data, DOT/DASH signal, and CH1 to CH4 signals switch operation signals from the main CPU.

The keyer microprocessor is normally at the standby mode (power save mode). Each control signal is connected to PB7 (pin 77). When this port is LOW, the standby mode is terminated.

When the standby mode is cancelled, PA7 (pin 30) outputs a HIGH signal. It is used to determine which control signal is active : CH1 to CH4, KEY SPEED VR data, or DOT/DASH signal.

PA2 (pin 25) is an input/output port that inputs KEY SPEED VR data and outputs control signal (HIGH) for VR data determination.

When a HIGH signal is output from PA2 (pin 25), C114 is charged. KEY SPEED VR data is calculated until C114 is discharged and the port goes LOW.

IRQ2 (pin 41) is an interrupt port that detects power supply voltage drop. When this port detects it, the standby mode is entered.

The keyer microprocessor outputs the key down and beep signals. The key down signal is input to IC22 (PC4 : pin 15), and the main CPU controls transmission and reception. The beep signal is input to IC29 (TC7S32F : OR gate) and output to the TX-RX unit as CKY.

The TX-RX unit determines the key jack ON/OFF and CKY level and outputs sidetone.

CIRCUIT DESCRIPTION

■ Band data

Frequency (MHz)		RF BPF (RB)		LPF	VCO				PLL	Frequency (MHz)		RF BPF (RB)		LPF	VCO				PLL
Lower limit	Upper limit	RX	TX		A	B	C	D	N	Lower limit	Upper limit	RX	TX		A	B	C	D	N
0.01	0.49	1	1	1	1	0	0	0	38	15.49	15.99	10	10	6	0	0	1	0	23
0.49	0.99	2	2						38	15.99	16.49								22
0.99	1.705								37	16.49	16.99								22
1.705	2.01	3	3						37	16.99	17.49								21
2.01	2.49			2					36	17.49	17.99								21
2.49	2.99	4	4						36	17.99	18.49								20
2.99	3.49								35	18.49	18.99								20
3.49	3.99								35	18.99	19.49								19
3.99	4.49	5	5						34	19.49	19.99								19
4.49	4.99			3					34	19.99	20.49								18
4.99	5.49								33	20.49	20.99								18
5.49	5.99								33	20.99	21.49	11	11						17
5.99	6.49								32	21.49	21.99	12	12		0	0	0	1	17
6.49	6.99								32	21.99	22.49			7					16
6.99	7.3	6	6						31	22.49	22.99								16
7.3	7.49	7	7						31	22.99	23.49								15
7.49	7.99			4	0	1	0	0	31	23.49	23.99								15
7.99	8.49								30	23.99	24.49								14
8.49	8.99								30	24.49	24.99								14
8.99	9.49								29	24.99	25.49								13
9.49	9.99								29	25.49	25.99			8					13
9.99	10.49								28	25.99	26.49								12
10.49	10.99	8	8	5					28	26.49	26.99								12
10.99	11.49								27	26.99	27.49								11
11.49	11.99								27	27.49	27.99								11
11.99	12.49								26	27.99	28.49								10
12.49	12.99								26	28.49	28.99								10
12.99	13.49								25	28.99	29.49								9
13.49	13.99								25	29.29	29.99								9
13.99	14.35	9	9						24	29.99	30								9
14.35	14.49	10	10						24										
14.49	14.99			6	0	0	1	0	24										
14.49	15.49								23										

CIRCUIT DESCRIPTION

■ Function of IC pins

1) CPU : M37702S4BFP (Control unit IC6)

Pin No.	Port name	Pin name	I/O	Function	Active level	Initial state
1	AN0	ADR0	I	VPRC, VMON, VAGC signal		
2	P67	RES	O	Reset signal output	L	H
3, 4	P66, P65	CTB, CTA	O	Analog switch select control signal B, A	H	H
5	INT2	PSW	I	Power switch inhibit signal	H	
6	INT1	BOVR	I	14V voltage drop inhibit signal		
7	INT0		I	Unused		
8, 9	TA4IN, TA4OUT	EDP1, EDP2	I	Main encoder pulse input		
10, 11	TA3IN, TA3OUT		O	Unused		L
12, 13	TA2IN, TA2OUT		O	Unused		L
14	P53	AMUT	I	AF mute signal	L	H
15	TA1OUT	SPED	O	AT motor speed control	L	H
16	P51	LCD	O	LCD and LED serial data		H
17	P50	LCK	O	LCD and LED serial clock		H
18	P47	BLK	O	LCD all off control signal	H	L
19	P46	RBK	O	RF mute signal	L	L
20	P45	14VSW	O	Power on control signal	H	H
21	P44	ECS	O	EEPROM clock		H
22	P43	EED	I/O	EEPROM data		
23	PHI			Unused		
24	RDY		I	Bus wait cancel	H	
25	HORD		I	Hold state cancel	H	
26	BYTE		I	External data bus width 8 bit setting	H	
27	CNVss		I			
28	RESET		I	Reset signal input	L	
29, 30	Xin, Xout		I	Clock signal input		
31	E		O			
32	Vss		I			
33	HLDA					
34	ALE		O			
35	BHE					
36	R/W		O	Read/write signal		
37~44	D7~D0		I/O	Bus		
45~60	A15~A0		O	Address output		
61~64	P87~P84	PB0~PB3	O	Logic key CPU control 0~3	H	L
65	TXD0	TXD0	O	Personal computer interface serial output		H
66	RXD0	RXD0	I	Personal computer interface serial input		
67	P81	RTS0	O	Personal computer interface RTS	H	L
68	CTS0	CTS0	I	Personal computer interface CTS		
69	Vcc		I			
70	AVcc		I			
71	Vref		I			
72	AVss		I			
73	Vss		I			
74	AN7	ADR7	I	Forward wave voltage (VSF)		
75	AN6	ADR6	I	Reflected wave voltage (VSR)		
76	AN5	ADR5	I	ALC meter analog input		
77	AN4		I	Unused		
78	AN3	ADR3	I	VPWR, VMIC, VDLY, VCAR signal		
79	AN2	ADR2	I	POD2, VRF, POD2, VAF signal		
80	AN1	ADR1	I	POD1, VNB, POD1, VSQL signal		

CIRCUIT DESCRIPTION

2) CPU : 68HC05G2419553 (Control unit IC24)

Pin No.	Port name	Pin name	I/O	Function	Active level	Initial state
1	VDD		I			
2~5	PB3~PB0		I	CH4 to CH1 switch input signal from IC6		
6~13	AD0~AD7		I	Unused		
14	VrefH			Unconnected		
15	VrefL		I			
16	Vss		I			
17	VDD		I			
18, 19	XOSC1, XOSC2		I	Unconnected		
20	RES		I	Reset signal input		
21, 22	OSC1, OSC2		I	Clock input		
23	PA0	DOT	I	DOT input		
24	PA1	DASH	I	Dash input		
25	PA2	SPEED VR	I/O	KEY VR data determine port		
26~29	PA3~PA6		I	Unused		
30	PA7	int contro	O	Inhibit determine control signal	H	
31~33	PG0~PG2		I	Unused		
34	TCMP		I	Unconnected		
35	PG4		I	Unused		
36	PG5	EBSY	I	Unused		
37	PG6	MBSY	I	Unused		
38	PG7		I	Unused		
39~44	PC0~PC5		I	Unused		
45	IRQ2	sleep	I	14V voltage drop determine inhibit port		
46	PC7		I	Unused		
47	VDD		I			
48	PD0		I	Unused		
49	PD1	mbusy	O	Message busy signal		
50	PD2		I	Unused		
51	PD3	pbc	O	Beep output signal		
52	PD4		I	Unused		
53	PD5	KEY	O	Key signal output		
54	PD6		I	Unused		
55	PD7		I	Unconnected		
56~59	PE0~PE3		I	Unused		
60	Vss		I			
61~64	PE4~PE7		I	Unused		
65~72	PH0~PH7		I	Unused		
73~76	PJ0~PJ3		I	Unused		
77	PB7	WAKE UP	I	Wake up inhibit		
78~80	PB6~PB4		I	Unused		

CIRCUIT DESCRIPTION

3) Extended I/O : CXD1095Q (Control unit IC16)

Pin No.	Port name	Pin name	I/O	Function	Active level	Initial state
1, 2	NC					
3~7	PB1~PB5	SHIMO1~SHIMO5	I	Destination determine port	H	
8	PB6	50W	I	50W switch signal	L	
9	PB7	UNL	I	Unlock signal	H	
10	Vss		I			
11	PC0	ENF1	O	Serial/parallel convert enable	H	L
12	PC1	UDA23	O	Serial/parallel convert data	—	L
13	PC2	UCK23	O	Serial/parallel convert clock		L
14	PC3	NFMT	O	Control signal except FM transmit mode	L	H
15, 16	PC4, PC5	VB3, VB2	O	VCO band data	H	L
17	PC6	VB1	O	VCO band data	H	H
18	PC7	VB0	O	VCO band data	H	L
19	NC					
20	PD0	PLE2	O	VCO2 enable	H	L
21	PD1	PLE1	O	VCO1 enable	H	L
22	PD2	PCK	O	PLL clock		L
23	PD3	PDA	O	PLL data		L
24	PD4		O	Unused		L
25	Vss		I			
26	VDD		I			
27	PD5	DLE3	O	DDS3 enable	H	L
28	PD^	DLE2	O	DDS2 enable	H	L
29	PD7	DLE1	O	DDS1 enable	H	L
30~32	D0~D2		I/O	Bus		
33, 34	NC					
35~39	D3~D7		I/O	Bus		
40	CLR		I	Port E output register clear	L	
41	ODEN		I	Output disable	L	
42	Vss		I			
43	WR		I	Write signal	L	
44	RD		I	Read signal	L	
45	CS		I	Chip select signal	L	
46~48	A0~A2		I	Address signal		
49	PE0	P TTI	I	External AT TT input	H	
50	PE1	P TSI	I	External AT TS input	H	
51	NC					
52	PE2	MBSY	I	Electronic keyer busy signal		
53	PE3		I	Unused		
54	PA0	P TTO	O	External AT TT output	H	L
55	PA1	P TSO	O	External AT TS output	H	L
56	PA2		O	Unused		L
57	Vss		I			
58	VDD		I			
59~62	PA3~PA6		O	Unused		L
63	PA7	LOGKEY	O	Electronic keyer reset	H	L
64	PB0	SHIMO0	I	Destination determine port	H	

CIRCUIT DESCRIPTION

4) Extended I/O : CXD1095Q (Control unit IC22)

Pin No.	Port name	Pin name	I/O	Function	Active level	Initial state
1, 2	NC					
3~9	PB1~PB7		I/O	DSP bus		
10	Vss		I			
11	PC0		I	Unused		
12	PC1	KEYS	I	Electronic keyer connecting determine signal	L	
13	PC2	MD	I	Microphone UP switch signal	L	
14	PC3	MU	I	Microphone DOWN switch signal	L	
15	PC4	KEYI	I	Key input signal	L	
16	PC5	PLUL	I	PLL unlock in DSP	L	
17	PC6	EOM	I	DRU-3 EOM signal	H	
18	PC7	VBSY	I	VS-2 busy signal	L	
19	NC					
20	PD0	DRST	O	DSP reset signal Normally "H"	L	H
21	PD1	VCEN	O	Electronic volume DAC enable	L	H
22	PD2	UCK22	O	Serial/parallel convert clock signal		L
23	PD3	UDA22	O	Serial/parallel convert data signal		L
24	PD4	DREN	O	DRU-3 enable signal	L	H
25	Vss		I			
26	VDD		I			
27	PD5	PLEN	O	PLL enable in DSP	H	L
28	PD6	STR	O	VS-2 start signal	H	L
29	PD7		O	Unused		L
30~32	D0~D2		I/O	Bus		
33, 34	NC					
35~39	D3~D7		I/O	Bus		
40	CLR		I	Port E output register clear	L	
41	ODEN		I	Output disable	L	
42	Vss		I			
43	WR		I	Write signal	L	
44	RD		I	Read signal	L	
45	CS		I	Chip select signal	L	
46~48	A0~A2		I	Address signal		
49	PE0	HENA	O	DSP enable A	L	H
50	PE1	HENB	O	DSP enable B	L	H
51	NC					
52	PE2	HRW	O	DSP R/W signal		H
53	PE3		O	Unused		L
54~56	PA0~PA2		O	DSP address signal		L
57	Vss		I			
58	VDD		I			
59	PA3		O	Unused		L
60	PA4	P BEEP	O	Beep output signal	H	L
61	PA5	P CKY	O	Transmit output control signal	H	L
62	PA6	P RXC	O	Receive control signal	H	H
63	PA7	P TXC	O	Transmit control signal	H	L
64	PB0		I/O	DSP bus		

CIRCUIT DESCRIPTION

5) Extended I/O : CXD1095Q (Control unit IC23)

Pin No.	Port name	Pin name	I/O	Function	Active level	Initial state
1, 2	NC					
3~9	PB1~PB7	P K1~P K7	I	Key matrix input	L	
10	Vss		I			
11	PC0	6KFIL	O	Analog filter select signal	H	L
12	PC1	3KFIL	O	Analog filter select signal	H	H
13	PC2	15KFIL	O	analog filter select signal	H	L
14~16	PC3~PC5	P ENR3~P ENR1	O	RF serial/parallel convert enable	H	L
17	PC6	P UDA21	O	Serial/parallel convert data		L
18	PC7	P UCK21	O	Serial/parallel convert clock		L
19	NC					
20~22	PD0~PD2		O	Unused		L
23	PD3	P APRE	O	AT motor control signal		L
24	PD4	P PR22	O	AT motor 2 control signal		L
25	Vss		I			
26	VDD		I			
27	PD5	P PR21	O	AT motor 2 control signal		L
28	PD6	P PR12	O	AT motor 1 control signal		L
29	PD7	P PR11	O	AT motor 1 control signal		L
30~32	D0~D2		I/O	Bus		
33, 34	NC					
35~39	D3~D7		I/O	Bus		
40	CLR		I	Port E output register clear	L	
41	ODEN		I	Output disable	L	
42	Vss		I			
43	WR		I	Write signal	L	
44	RD		I	Read signal	L	
45	CS		I	Chip select signal	L	
46~48	A0~A2		I	Address signal		
49	PE0	P THP	I	Thermal protection signal	H	
50	PE1	P SS	I	Microphone PTT switch signal	L	
51	NC					
52	PE2		I			
53	PE3		O	Unused		L
54	PA0	P DIM	O	Dimmer control signal	H	H
55, 56	PA1, PA2	P ENL3, P ENL2	O	LCD driver enable signal	H	L
57	Vss		I			
58	VDD		I			
59	PA3	P LATC	O	AT LED	H	L
60, 61	PA4, PA5	P ENL1, P ENL4	O	Switch serial/parallel convert enable	H	L
62, 63	PA6, PA7		O	Unused		L
64	PB0	P K0	I	Key matrix input	L	

CIRCUIT DESCRIPTION

TX-RX Unit (DSP Operation)

■ Outline

The TS-870S uses the DSP to carry out various processing as compared with the conventional models. They include the following:

- Modulation and demodulation
- Filter processing
- AGC processing (S-meter data output)
- Mic amplifier AGC processing
- VOX processing
- Voice equalizing processing
- Noise processing (noise reduction, beat cancel, automatic notch)
- Speech processing (COMP meter data output)
- Squelch processing
- Sidetone and beep generation

The commands and data for the microprocessor are listed below (see page 42).

The TX-RX unit circuits are divided into the analog section that processes analog signals and digital section that processes digital data. The interface between the analog and digital sections is the analog-to-digital converter (IC25 : AK5340-VS) and digital to analog converter (IC16 and IC27 : AK4318-VS, IC34 : PCM69AU).

The unit has another digital to analog converter (IC26 : M62363FP) for VCA (electronic volume : M51131L) control. The volume is controlled directly by the microprocessor in the control unit (the volume is not controlled by the DSP).

■ Digital section

The digital section is explained below. Figure 17 is a digital section block diagram.

The digital section consists of two DSPs (IC1 and IC2 : DSP56002FC40), RAM (IC7 : MCM56824AFN2*), three ROMs (IC4, IC5, IC6 : 27C256PCJJ**), and gate array (IC3 : MBCG24173-6173) and PLD (IC9 : 7032LC44JLQ*). The TX-RX unit has a PLL, but it is included in the digital section for convenience. * indicates the version number.

The PLL in the TX-RX unit is controlled directly by the microprocessor in the control unit, and clocks of a fixed frequency of 46.32MHz are generated. This circuit forms a VCO consisting of Q8 : 2SK210(GR), Q9 and Q10 : 2SC2714(Y). Q8 is an oscillator and Q9 and Q10 are buffer amplifiers. Q5, Q6, and Q7 comprise an active low-pass filter. This low-pass filter converts the output from PLL IC IC15 : MB86001PF to DC voltage and sends it to the VCO.

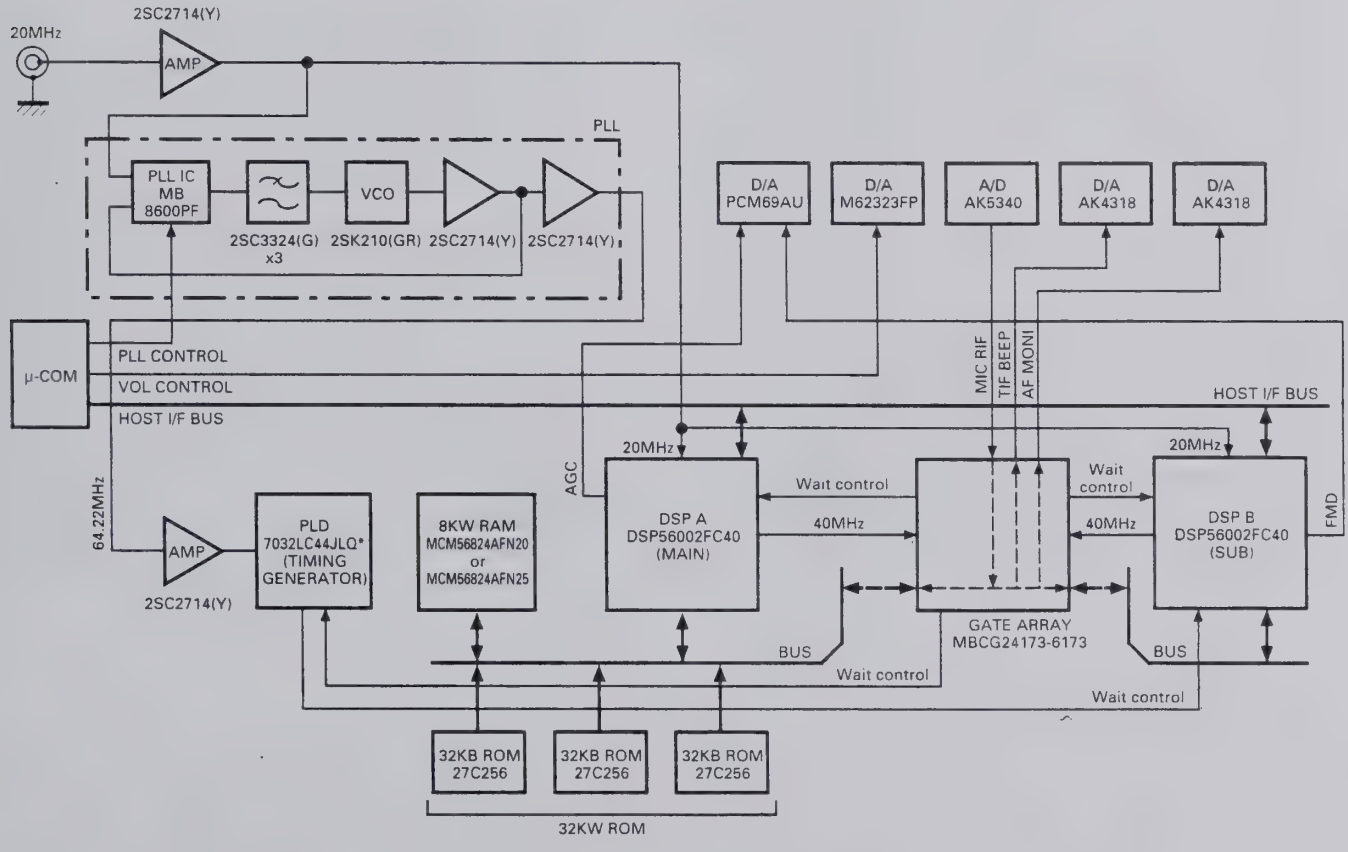

Fig. 17 Digital section block diagram

CIRCUIT DESCRIPTION

Figure 18 is a block diagram of the PLD (Programmable Logic Device). The clock with a sampling frequency fs (45.234375kHz) is generated from the 46.32MHz clock produced by the PLL in the TX-RX unit by the clock divider in the PLD. This clock is used for data transmission and reception between the analog-to-digital and digital to analog converters and gate array and data transmission and reception between the gate array, DSP, and the analog to digital and digital to analog converters. The PLD forms part of the bus control circuit for sharing the RAM and ROM with two DSPs and the circuit that accesses the ROM.

The gate array is used as the interface between the analog to digital and digital to analog converters and the DSP. Data is received from the analog to digital converter, or transmitted to the digital to analog converter, and each DSP is interrupted in the 1/fs sampling intervals. The gate array interfaces two DSPs for communication, and the two other DSPs control the bus for sharing the RAM and ROM.

The DSP has a 24 bit fixed-decimal DSP. It operates with the 40MHz clock, but the external 20MHz clock is given to the DSP. The DSP operates the 40MHz clock generated in the PLL in the IC. The clock is programmed to be output to pin 123 (CKOUT) of the DSP. Transfer of commands with the microprocessor is carried out through the host interface of the DSP.

The ROM and RAM are shared by two DSPs. When one of the DSPs is being accessed, the other DSP waits. It is carried out by the gate array and PLD. Three 8 bit ROMs are used to implement 24 bits.

The analog to digital converter (IC25 : AK5340-VS) is an 18 bit Δ-Σ type ADC for audio equipment. There are two channels, R and L. The R channel is used for the receive signal and the L channel is used for the microphone input signal. The digital to analog converter (IC16 and IC27 : AK4318-VS) is a 18 bit Δ-Σ type DAC for audio equipment. The digital to analog converter has two channels like the analog to digital converter : IC16 uses the R channel for the beep signal and the L channel for the transmit signal, and IC27 uses the R channel for the monitor signal and the L channel for the decode signal. Another digital to analog converter (IC34 : PCM69AU) is an 18 bit DAC for audio equipment, and uses the Rch for AGC and the L channel for audio signals in FM.

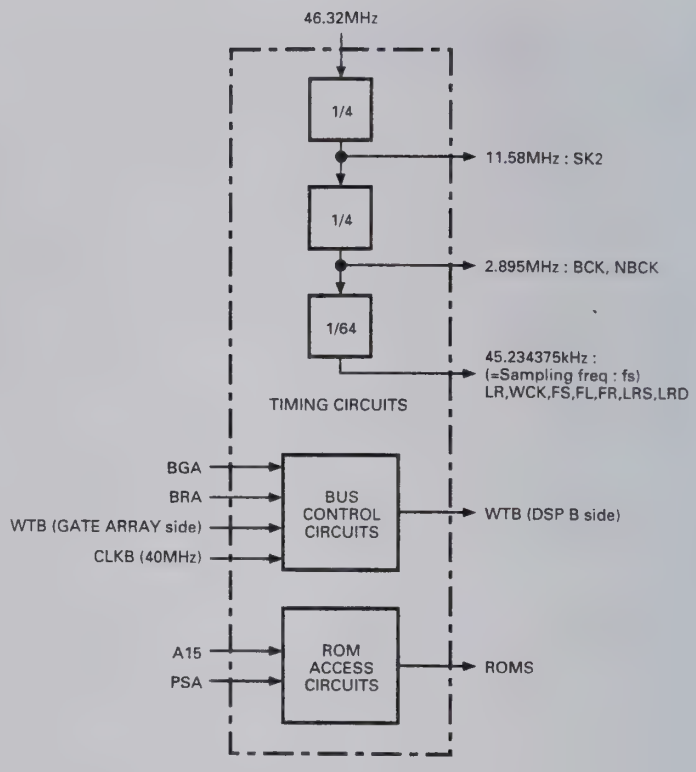

Fig. 18 PLD block diagram

■ Flow of transmit/receive signals

Flow of transmit/receive signals is explained below, together with the analog and digital sections. Flow of receive signals is explained first. See Figure 19.

The receive signal input from pin 3 (RIF) of CN1 is amplified by IC43 : NJM5532M. If a HIGH signal is input to RIF, its amplitude is limited to prevent any signal that exceeds the input range to the analog to digital converter (IC25 : AK5340-VS). The signal is passed through the band-pass filter and buffer amplifier, and its frequency is converted by the mixer (IC18 : MC74HC4053F). The frequency of the receive signal is about 1/4 of sampling frequency fs. The fs/4 frequency is the most stable frequency for digital signal processing. The receive signal of the fs/4 frequency is passed through the buffer amplifier, amplified by amplifier IC21 : NJM4560M, and converted to digital data by the analog to digital converter (IC25).

CIRCUIT DESCRIPTION

This data is read into the gate array (IC3 : MBCG 241873-6173) in sampling intervals 1/fs. The data read into the gate array is fed to the DSP in 1/fs for processing. DSP A (IC1 : DSP56002FC40) carries out auto notching, demodulation, noise processing, and squelch processing, and DSP B carries out AGC and filter processing.

AGC data, one of the DSP B operation results, is sent to the digital to analog converter (IC34 : PCM69AU) from pin 33 of DSP B (IC2: DSP56002 FC40) in 1/fs intervals. AGC data is converted to an analog current by IC34, and converted to an analog voltage by the I-V converter IC35 : AD822AR, and is output to the RF unit as the AGC voltage. The AGC voltage is reversed by the reversing amplifier IC35 : AD822AR, and the S-meter voltage used for packet communication is generated and output from the SMET terminal of ACC2 (J5).

The digital data demodulated by two DSPs is sent to the gate array in 1/fs intervals. The data is sent to the digital to analog converter (IC27 : AK4318-VS) from pin 68 of the gate array in 1/fs intervals and converted to an analog signal. The demodulate signal converted to an analog signal is passed through the third low-pass filter IC28 : NJM2100M. This low-pass filter eliminates the alias components. The demodulate signal then enters the VCA (IC29 : M51131L). The VCA attenuates and outputs the demodulate signal according to the voltage given to pin 8 of IC29. The voltage at pin 8 is the voltage corresponding to the rotational angle of the AF VOL, and is controlled by the microprocessor in the control unit. The demodulate signal is passed through the VCA, amplified by the AF amplifier (IC33 : LA4422), and output to the speaker and headphone.

Demodulation data used for packet communication is passed through low-pass filter IC28 : NJM2100M, then attenuated by the VCA IC31 : M51131L. The attenuation amount is determined by the value set on the menu. The signal is passed through the VCA and ACC2 (J5) through the buffer amplifier Q17 : 2SC 2412K(S), and output to the TNC.

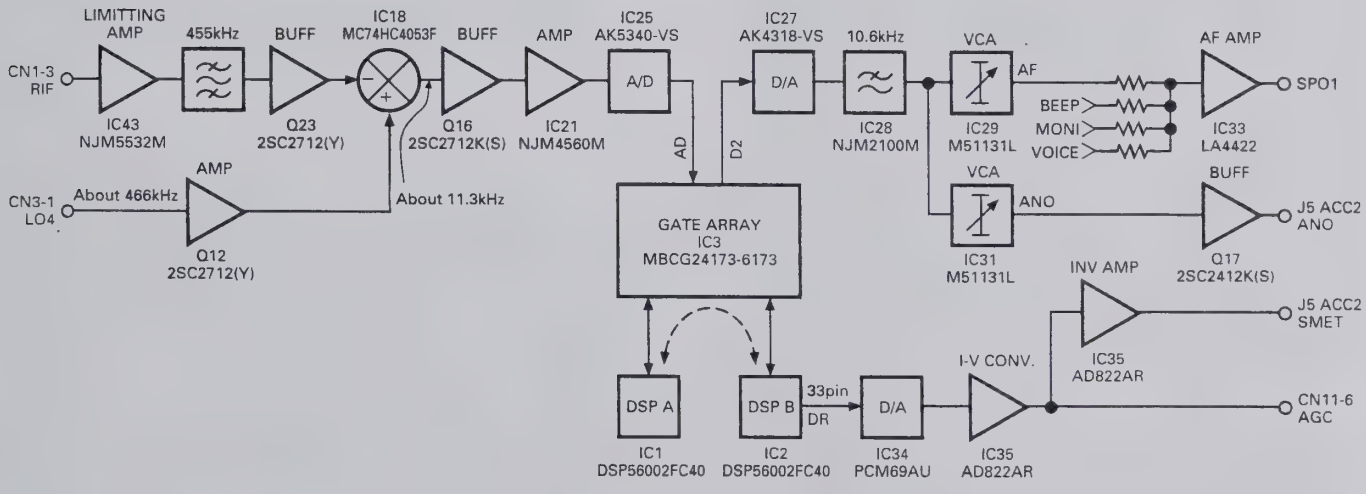

Fig. 19 Flow of receive signal

CIRCUIT DESCRIPTION

Then, flow of transmit signals is explained below. See Figure 20. If the mode is SSB, FM, or AM, the signal from the microphone is input. The signal enters the TX-RX unit through CN4. The signal is amplified by amplifier IC22 : AD822AR, and goes to the multiplexer (IC23 : MC74HC4052F). The multiplexer is used to switch between the microphone signal, the play signal from the DRU-3 (option), and packet signal. The signal passing through the multiplexer is amplified by amplifier IC24 : NJM2100M, and converted to digital data by the analog to digital converter (IC25 : AK5340-VS). The data is read into the two DSPs in the same way as for the receive signal. In transmit mode, DSP A carries out modulation, speech processing, and carrier signal generation in CW, FSK, and FM modes, while DSP B carries out VOX processing, voice equalizing processing, preemphasis processing (in FM mode), and microphone amplifier AGC processing.

The DSP does not perform modulation in FM mode. The DSP sends a 455kHz carrier signal from pin 1 (TIF) of CN1, adds subtone to the carrier signal, preemphasizes sounds, and limits the amplitude. Preemphasized audio data is sent from pin 33 of DSP A (IC1 : DSP56002FC40) to the digital-to-analog converter (IC34 : PCM69AU) in 1/fs intervals, and converted to an analog current. The analog current is converted to the audio signal of the analog voltage by the I-V converter IC36 : NJM4560M. IC36 also serves as the third low-pass filter that eliminates the alias components of the audio signal. The analog audio data signal is output from pin 3 (FMD) of CN3 to the PLL section.

The data modulated by the two DSPs (including FM carrier data) is sent to the gate array in the process as the demodulated signal. The signal is sent from pin 60 of the gate array to the digital to analog converter (IC16 : AK4318-VS) in 1/fs intervals, and converted to an analog signal. The frequency of this signal is fs/4. The analog modulated signal is passed through the third low-pass filter IC17 : NJM2100M to eliminate alias components. The signal is converted to the 455kHz IF signal by the mixer (IC18 : MC74HC4053F) and two ceramic filters (CF2 and CF3), and output from pin 1 (TIF) of CN1.

Monitor data, one of the DSP operation results, is sent to the gate array in the same process as the demodulate signal. Like the demodulate signal, the signal is sent from pin 68 of the gate array to the digital to analog converter (IC27 : AK4318-VS), and converted to an analog signal. The analog sidetone signal is passed through the third low-pass filter IC30 : NJM2100M and attenuated by VCA (IC31 : M51131L). The attenuation is determined by the rotational angle of MONI VOL. The flow of the signal after passing through the VCA is the same as for the demodulate signal.

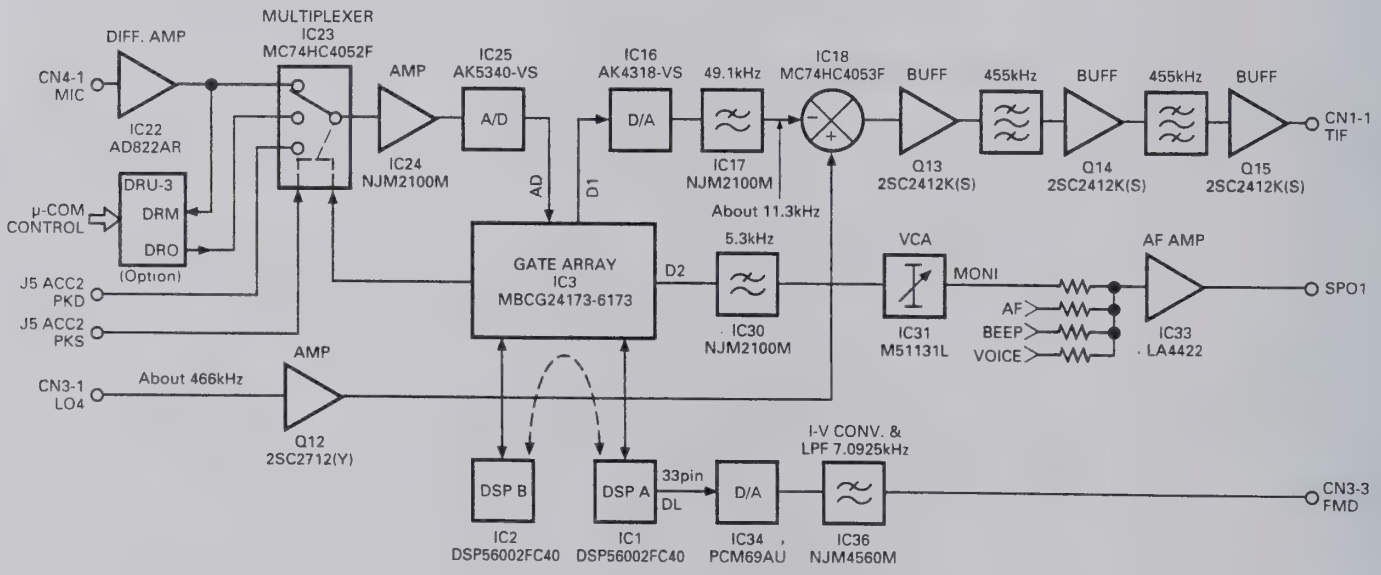

Fig. 20 Flow of transmit signal

CIRCUIT DESCRIPTION

■ Sidetone signal flow

When the electronic keyer is pressed, the sidetone is output. The sidetone is processed by DSP A. Sidetone data, a DSP A operation result, is output to the speaker or headphone in the same process as the monitor data. See Figure 21.

■ FSK tone signal flow

The flow of the FSK tone signal is the same as that of the sidetone. See Figure 21.

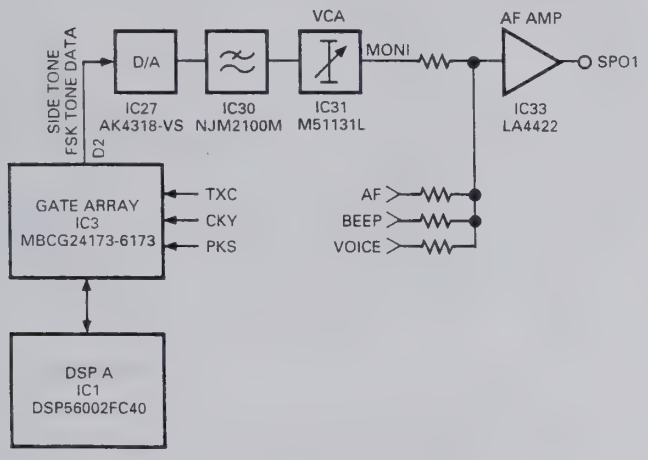

Fig. 21 Sidetone and FSK tone signal flow

■ Beep signal flow

When pin 6 (BEEP) of CN7 goes HIGH, DSP A sends beep data to the gate array in the same process as the demodulate signal. Like modulation data, the signal is sent from pin 60 of the gate array to the digital to analog converter (IC16 : AK4318-VS) in 1/fs intervals, and converted to an analog signal. The analog beep signal is passed through the primary low-pass filter IC19 : NJM4560M, and attenuated by VCA (IC29 : M51131L). The attenuation is determined by the value set on the menu. The flow of the signal after passing through the VCA is the same as for the demodulate signal.

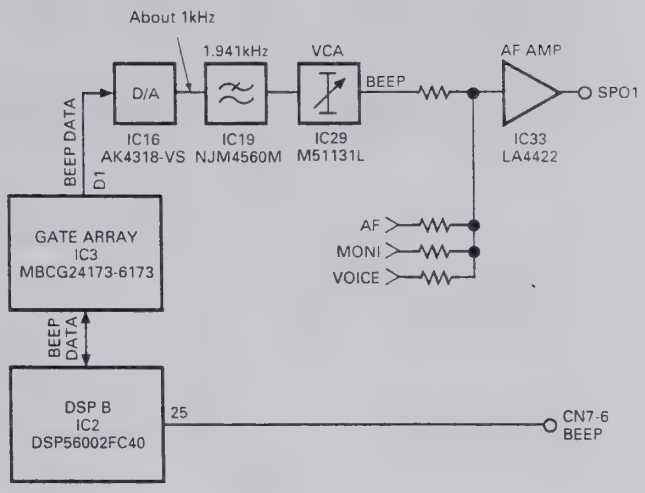

Fig. 22 Beep signal flow

■ DRU-3 recording and playback

The DRU-3 is controlled by the microprocessor in the control unit. During the DRU-3 recording, the MIC signal amplified by the differential amplifier (IC22 : AD822AR) is input to the DRU-3, and recorded. During DRU-3 playback, the playback signal is input to the analog-to-digital converter by switching the multiplexer (IC23 : MC74HC4052F). When the DSP receives a command "VOX ON and DRU playback" from the microcomputer, pin 38 of DSP B (IC2 : DSP56002FC40) goes HIGH and the SS line goes LOW. When the SS line goes LOW, the microprocessor sets the transceiver to transmit mode. This operation does not occur at the playback sound level of the DRU-3. Even if no sound is recorded, the transceiver enters the transmit mode when a DRU playback command arrives while VOX is ON. See Figure 20.

■ VS-2 audio signal flow

The audio signal output from the VS-2 is not processed by the DSP. The signal is amplified by the AF amplifier, and output to the speaker or headphone. The VS-2 is controlled by the microprocessor. See Figure 23.

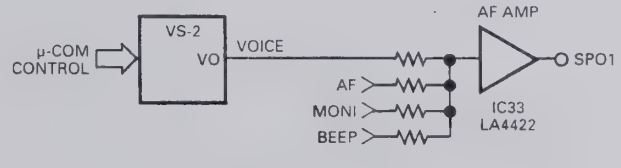

Fig. 23 VS-2 audio signal flow

CIRCUIT DESCRIPTION

■ Commands and data transferred to or from the microprocessor

To understand the DSP processing, the commands sent from the microcomputer to the DSP, and data sent from the DSP to the microcomputer are described below.

For details of error status, see the error list (Table 10).

1) Microprocessor → DSP

- Transmit mode
- Transmit filter
- CW rise (fall) time
- FSK shift width
- Squelch level
- Applicable filter follow speed
- SPAC interrelation time
- Check mode operation setting
- VOX delay time
- AGC release time
- TX AGC release time
- AGC correction
- TX equalizing
- FM modulation
- Processor compression level (LOW)
- Processor compression level (MID)
- Processor compression level (HIGH)
- RX AF AGC gain (AM/FM)
- RX AF AGC gain release time (AM/FM)
- TX AGC gain (packet input)
- Receive mode
- Receive filter
- CW pitch frequency
- FM subtone frequency
- Noise/interference elimination mode setting
- Auto notch follow speed
- Operation flag 1
- VOX gain
- RF gain (AGC)
- TX AGC gain
- AM modulation
- Carrier level
- Operation flag 2

2) DSP → Microprocessor

- S-meter data
- Compression level data
- Squelch status
- Microphone level data
- Error status
- Check mode status

Error No.	Error description
00	TX-RX unit is not connected.
01	Main DSP stack error
02	Main DSP trace error
03	Main DSP software interrupt
04	Main DSP SSI reception
05	Main DSP SSI exceptional reception
06	Main DSP SCI reception
07	Main DSP SCI exceptional reception
08	Main DSP SCI transmission
09	Main DSP SCI line idle detection
0A	Main DSP NMI
0B	Main DSP invalid command detection
0C	Command cannot be transferred from the main DSP to the sub DSP.
10	RAM check error 1
11	RAM check error 2
12	Gate array check error
21	Sub DSP stack error
22	Sub DSP trace error
23	Sub DSP software interrupt
24	Sub DSP SSI reception
25	Sub DSP SSI exceptional reception
26	Sub DSP SCI reception
27	Sub DSP SCI exceptional reception
28	Sub DSP SCI transmission
29	Sub DSP SCI line idle detection
2A	Sub DSP NMI
2B	Reserved
2C	Reserved
2D	Sub DSP invalid command detection
2E	Reserved
F0	Main DSP timeover error
F1	Sub DSP timeover error
FD	PLL unlock (TX-RX unit)
FE	PLL unlock (RF unit PLL section)
FF	Temperature protection error

Table 10 Error list

CIRCUIT DESCRIPTION

■ New function circuit

The TS-870S noise processing, auto notch, line enhancer, SPAC, and beat cancel functions are characteristics of the DSP digital signal processing. These functions and other features are described below.

1) Auto notch

The auto notch corresponds to the IF filter used in the previous models. It is an adaptive filter, and emphasizes weak signals by tracking interfering signals automatically in the AGC loop (the reception gain increases). The notch filter has very good damping and frequency characteristics in the receiving bandwidth.

2) Beat cancel

The "beat cancel" corresponds to the AF filter used in the previous models. It also is an adaptive filter, and finds and removes beat components from the received signal. Unlike the notch filter, this filter removes multiple beats, but it does not emphasize weak signals even if the beat is canceled.

3) Noise reduction

The TS-870S uses a line enhancer or SPAC to reduce noise. One of these two functions should be assigned to the N.R. key on the front panel.

The line enhancer is an adaptive filter which does not attenuate the target signal, but attenuates only noise. If the conditions are not very bad, the S/N ratio can be improved greatly.

Select SPAC to improve the S/N ratio effectively. SPAC stands for "Speech Processing System by use of Auto Correlation function." It takes the periodical signal (target reception signal) and suppresses noise using the Auto Correlation function. Since SPAC takes reception signals with a certain time width, the signals become discontinuous and cause noise.

Since the auto notch, beat cancel, and line enhancer are adaptive filters, their characteristics change according to the input signal. If the automatic tracking is set to OFF on the menu when the filter effect is good under good signal conditions, the effect does not change even if the conditions turn bad.

4) VOX

DSP processes the correlation between the received signal and signal from the microphone, and carries out the conventional anti-VOX processing. Therefore, TS-870S does not have anti-VOX.

5) SSB modulation/demodulation

TS-870S uses the PSN modulation/demodulation used for TS-950 and subsequent models. With the increase in the DSP operation precision, the side-band suppression has been improved in a very wide bandwidth from 25Hz to 6kHz (80dB or more for modulation and 90dB for demodulation). The PSN method does not eliminate all group-delay distortion because the Hilbert converter uses an IIR filter. The TS-870S uses a linear phase shifter with a Hilbert converter containing an FIR filter. As the FIR filter can keep group delay constant, it does not cause group-delay distortion. However, as the group-delay itself increases, if the linear phase shifter is set to ON via the menu, a signal is transmitted several ms after a voice enters the microphone.

■ Analog section and other circuits

The analog section and other circuits were described in the flow of transmission and reception signals. This section describes the circuits that were not explained in the flow of transmission and reception signals.

1) Reference voltage circuit

Since TS-870S does not have a negative power supply, a 2.5V reference voltage, which is half the power supply voltage, is supplied to the OP amplifier to process analog signals linearly. Fig. 24 shows this circuit. 2.5V are produced by dividing the power supply voltage by R129 and R132. This voltage is provided to the circuitry through buffer amplifier IC19 or IC20.

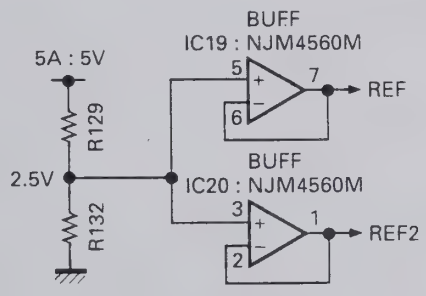

Fig. 24 Reference voltage circuit

CIRCUIT DESCRIPTION

2) Pop mute circuit

The mute circuit shown in Fig. 25 reduces the pop sound when the power is switched ON and OFF. If CN7 pin 16 AMUT is LOW, the mute circuit consisting of IC44 : TC7S04F and Q22 : DTC124EK mutes the AF amplifier (IC33 : LA4422) and suppresses the pop sound when the power is turned ON. A microprocessor controls AMUT and cancels muting at an appropriate time.

When the power is turned OFF, muting is also controlled by AMUT, but is done only if the power switch ON TS-870S is pressed. The circuit comprising Q25 : DTA143EK, Q26 : DTC124XK, and Q27 : DTC143EK suppresses the pop sound when the external power supply switch is turned OFF. When this switch is turned OFF, the voltage of the AF amplifier power supply 14A decreases. When the 14A voltage falls, Q25 becomes active (ON), and then Q26 becomes active (the collector goes LOW to mute the AF amplifier and suppress the pop sound. Q27 prevents muting when the voltage of the AF amplifier power supply 14A falls during transmission.

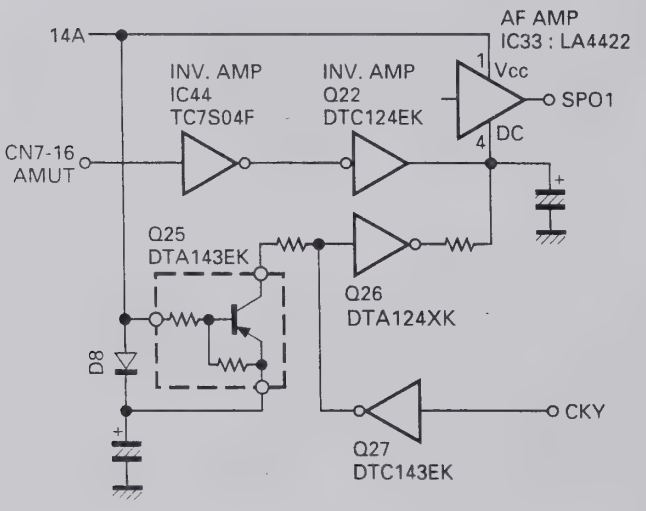

The TS-870S uses AF amplifier IC33: LA4422 pin 4 (DC) as the mute pin.

Fig. 25 Pop mute circuit

■ Transmit/receive frequency characteristics correction circuit

The transmission sound quality has a flat frequency characteristic due to DSP modulation. However, the low-frequency range is also flat to the cut-off frequency, so the model has less clarity compared to the conventional transceivers. A correction circuit is provided to suppress the low-frequency range. It consists of R141, R155, and C145 in the TX-RX unit, and it is –2dB at 300Hz for 1kHz.

To return to the flat frequency characteristic, remove C145 and replace R155 with a 1.8kΩ resistor. (See Figure 26.)

The receive frequency is also flat, as well as the hi-fi sound quality when the filter is widened. When the receive frequency is flat, the volume of the low-frequency range becomes insufficient, so a correction circuit that slightly emphasizes the low-frequency range is provided. It consists of R204, R205, R208, and C208 in the TX-RX unit, and it is +2dB at 1kHz for 3kHz.

To return to the flat frequency characteristic, remove R205. (See Figure 26.)

Transmit side

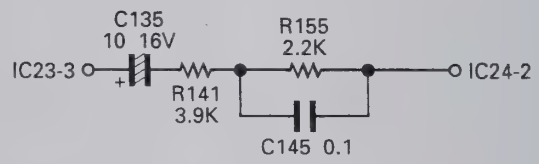

Receive side

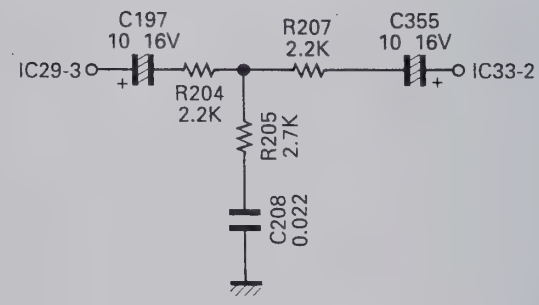

Fig. 26 Transmit/receive frequency characteristics correction circuit

DESCRIPTION OF COMPONENTS

RF UNIT (X44-3210-00) (A/9) : RF

Ref. No.	Use/Function	Operation/Condition
Q1	Switching	On when exit RX on.
Q2	Switching	On when TX.
Q3	Switching	Off when ATT1 or ATT2 on.
Q5	TX RF amplifier	Drive output (TX frequency)
Q6	Switching	DATT on
Q7	Switching	1/2 : 30kHz~490kHz 2/2 : 490kHz~1.62MHz
Q8	Switching	1/2 : 1.62MHz~2.49MHz 2/2 : 2.49MHz~3.99MHz
Q9	Switching	1/2 : 3.99MHz~6.99MHz 2/2 : 7.30MHz~10.49MHz
Q10	Switching	1/2 : 6.99MHz~7.30MHz 2/2 : 13.99MHz~14.49MHz
Q11	Switching	1/2 : 20.99MHz~21.49MHz 2/2 : 21.49MHz~30.00MHz
Q12	Switching	1/2 : 14.49MHz~20.99MHz 2/2 : 10.49MHz~13.99MHz
Q13	RF amplifier	21.49MHz~30.00MHz
Q14, 15	RF amplifier	30kHz~21.49MHz
Q16	Amplifier	LO1 : 73.08MHz~103.05MHz
Q17~20	Mixer	$f_{LO1} - f_{RF} = 73.05MHz$
Q21	Ripple filter	14S
Q22	Amplifier	73.05MHz
Q23	Mixer	73.05MHz – 64.22MHz = 8.83MHz
Q24	Amplifier/AGC	73.05MHz
Q26, 27	Mixer	73.05MHz – 64.22MHz = 8.83MHz
Q28	Amplifier	8.83MHz
Q29~31	Amplifier/AGC	8.83MHz
Q32	AGC	NB (Noise blanker)
Q33	Amplifier/AGC	8.83MHz
Q35, 36	Mixer	73.05MHz → TX f
Q37, 38	Mixer	8.83MHz → 73.05MHz
Q39	Amplifier	TX IF
Q42	Switching	RF blanking
Q43, 44	DC amplifier	ALC
Q45, 46	Switching	On when AM mode.
Q47	DC amplifier	ALC
Q48	Switching	On when AM transmission mode.
Q49	Switching	
Q50	DC amplifier	ALC amplifier
Q51	Switching	Pulse generate when AM transmission mode.
Q52	DC amplifier	ALC amplifier
Q54	Switching	Off when NB.
Q55	Switching	Make relay for linear.
Q56	Switching	On when TX.
Q57, 59	Switching	TXB generate
Q58, 60	Switching	RXB generate
Q61	Switching	On when AIP off (0~21.49MHz).
Q62	Switching	On when AIP off (21.49~30MHz).
Q63	Switching	On when AIP off.
Q64	Switching	On when AIP on.
Q65	Switching	12V when RX.
Q66	Switching	On when RX.
Q70, 71	Switching	CKY
IC1	Serial/Parallel conversion	BPF selection
IC2	Serial/Parallel conversion	
IC6	OP amplifier	ALC meter
IC7	DAC	8 ch
IC8	Meter amplifier	VSF, VSR, ALC and Processor.

DESCRIPTION OF COMPONENTS

Ref. No.	Use/Function	Operation/Condition
IC9	Comparator	NB pulse
IC10	AVR	8V → 5V
D1~3	Relay surge absorption	
D4~7	Large input protection	
D8	RF switch	On when RX.
D10	RF switch	On when TX.
D11~33, 35	RF switch	BPF switch
D36, 37	RF switch	On when AIP on.
D38, 39	RF switch	ON when 21.49MHz or more RF amplifier selection.
D40, 41	RF switch	On when 21.50MHz or less RF amplifier selection.
D42	RF switch	
D43	RF switch	LO2 (64.22MHz) switch
D46	RF switch	Noise detection
D47	RF switch	TGC voltage control
D49	RF switch	Gain control
D50	Zener diode	-6.2V stability
D51	LED	Voltage generate
D52	Zener diode	12V (ALC voltage for linear)
D53	Switch	Pulse generate
D54	Reverse current prevention	
D55	Zener diode	3V (Voltage shift)
D56	Switch	ALC
D57	LED	CKY
D58	Relay surge absorption	
D59	Reverse current prevention	RBK
D60	RF switch	On when 29MHz.
D61	RF switch	On when AIP on.
D62	RF switch	On when RX.
D63, 64	RF switch	8.83MHz filter changeover (15kHz).
D65, 66	RF switch	8.83MHz filter changeover (3kHz).
D67	RF switch	8.83MHz filter changeover (6kHz).
D68	RF switch	On when TX.
D69	RF switch	8.83MHz filter changeover (6kHz).
D70	Zener diode	6.2V (Voltage shift)
D71	Zener diode	4.7V (Voltage stability)
D72	Switch	CKY

RF UNIT (X44-3210-00) (B/9) : PLL

Ref. No.	Use/Function	Operation/Condition
Q500	Buffer	D/A buffer
Q501	Amplifier	20MHz (f_{STD})
Q502	Mixer IC506 input buffer	5.46~4.46MHz
Q503	Buffer	D/A buffer
Q504, 505	Switching	Chopper
Q506	Buffer	Output for chopper
Q507	Amplifier	LO3 (8.375MHz)
Q508	Buffer	For LO3 output
Q510	Buffer	D/A buffer
Q511	Buffer	For LO4 output
Q512	Amplifier	REF 20MHz
Q513	Tripled circuit	f_{SDT} x 3 = 60MHz
Q514, 515	Buffer	Reference oscillator 20MHz
Q516	VCO A changeover	
Q517	VCO B changeover	

DESCRIPTION OF COMPONENTS

Ref. No.	Use/Function	Operation/Condition
Q518	VCO C changeover	
Q519	VCO D changeover	
Q520	VCO A	73.08~80.54MHz
Q521	VCO B	80.54~87.54MHz
Q522	VCO C	87.54~94.54MHz
Q523	VCO D	94.54~103.05MHz
Q524	Buffer	VCO A~VCO D output (73.08~103.05MHz)
Q525	Mixer IC508 input buffer	73.08~103.05MHz
Q526	Buffer	For LO1 output
Q527	Active LPF	Comparison 1MHz
Q528, 529	Active LPF	
Q530	Amplifier	PLL IC IC507 input (18~48MHz)
Q531	Amplifier	18~48MHz
Q532	Amplifier	LO2A output (64.22MHz)
Q533	Switching	PLL unlock signal output ("H" : Unlock)
Q534~536	Active LPF	Comparison 20kHz (5kHz in FM mode)
Q537	Switching	FM modulation input on/off
Q539	Buffer	For LO2A outrput
Q800	Reference oscillator	Reference frequency 20MHz oscillation.
IC500	DDS	1.46~0.46MHz for LO1
IC501	DDS	1.625MHz for LO3
IC502	DDS	For LO4
IC503	Divider	20MHz x (1/5) = 4MHz
IC505	Mixer	1.46~0.46MHz → 5.46~4.46MHz
IC506	Mixer	5.46~4.46MHz → 54.54~55.54MHz
IC507	PLL	2~5 : Frequency division ratio input 6 : 18~48MHz input 9 : Lock voltage output 11 : Unlock output (Unlock : "L") 15 : 20MHz input
IC508	Mixer	73.05~103.05 + 54.54~55.54 = 18~48MHz
IC509	PLL	2~5 : Frequency division ratio input 6 : 64.22MHz input 9 : Lock voltage output 11 : Unlock output (Unlock : "L") 15 : 20MHz input
IC510	AVR	13.8V → +9V
IC511	AVR	13.8V → +9V low drop-out
D500	Vari-cap diode	VCO A
D501	Switching	VCO A output
D502	Vari-cap diode	VCO B
D503	Switching	VCO B output
D504	Vari-cap diode	VCO C
D505	Switching	VCO C output
D506	Vari-cap diode	VCO D
D507	Switching	VCO D output
D508	Reverse current prevention	Unlock signal detection

FINAL UNIT (X45-351X-XX) (A/5) : FINAL 0-00 : K,P,M,M2,X 2-71 : E,E2,E3,E9

Ref. No.	Use/Function	Operation/Condition
Q501	Pre-drive amplifier	Wide-band amplification of HF band
Q502, 503	Drive amplifier	Push-pull wide-band amplification of HF band
Q504	Drive bias supply	Temperature compensation of drive
Q505, 506	Final amplifier	Push-pull wide-band amplification of HF band
Q507	Final bias supply	Temperature compensation of final
D501	Temperature compensation	Temperature sensing of pre-drive
D502	Temperature compensation	Temperature sensing of drive
D503	Temperature compensation	Temperature sensing of final
D504	Reverse power connection protection	

DESCRIPTION OF COMPONENTS

FINAL UNIT (X45-351X-XX) (B/5) : FILTER

Ref. No.	Use/Function	Operation/Condition
Q1~5	Relay driver	
Q6	Switch	Antenna tuner through tune
Q10~16	Relay driver	
IC1	Band data decoder	
D1	High-frequency rectification	Reflected wave rectification
D2	High-frequency rectification	Forward wave rectification
D3	Voltage stabilization	5.1V
D4	Relay surge absorption	1.6~2.0MHz LPF relay
D5	Relay surge absorption	2.0~4.0MHz LPF relay
D6	Relay surge absorption	4.0~7.5MHz LPF relay
D7	Relay surge absorption	7.5~10.5MHz LPF relay
D8	Relay surge absorption	10.5~14.5MHz LPF relay
D9	Relay surge absorption	14.5~21.5MHz LPF relay
D10	Relay surge absorption	21.5~30.0MHz LPF relay
D11	Switching	

FINAL UNIT (X45-351X-XX) (C/5) : CONNECTION

Ref. No.	Use/Function	Operation/Condition
Q401~403	DC/DC	–6V
Q404	Ripple filter	14S → 14V
Q405	Ripple filter, AVR	
Q460, 461	Mixer	RX
Q470, 471	Mixer	TX
Q472, 475	Amplifier	TX IF
IC402	5V AVR	8V → 5V (For PLL)
D401	Rectification	
D402	Current stabilization	9V
D450	Reverse current prevention	
D451~456	RF switch	BPF switch
D457	Reverse current prevention	

FINAL UNIT (X45-351X-XX) (D/5) : AVR

Ref. No.	Use/Function	Operation/Condition
Q601	Switch	14S supply when power switch on.
Q701	Switch	On when fan operation
Q702, 703	Switch	Fan motor drive
IC601	8V AVR	13.8V → 8V (Analog 8V : 8A)
IC602	8V AVR	13.8V → 8V (Digital 8V : 8D)
IC701	Comparator	Fan control
D601	Relay surge absorption	
D701	Reverse current prevention	
D702	Surge absorption	

FINAL UNIT (X45-351X-XX) (E/5) : RELAY

Ref. No.	Use/Function	Operation/Condition
D301	Lightning surge protection	ANT1
D302	Lightning surge protection	ANT2
D303	Relay surge absorption	Antenna changeover relay
D304	Relay surge absorption	TX/RX changeover relay

DESCRIPTION OF COMPONENTS

AT UNIT (X53-3340-02)

Ref. No.	Use/Function	Operation/Condition
Q1, 2	Amplifier	Waveform shaping
Q3	Switching	On when APRE is "H".
Q4, 5	Switching	Motor speed control pulse
IC1	DFF	Phase difference detection 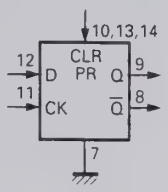 Function table: INPUTS (CLOCK, D) / OUTPUTS (Q, $\overline{Q}$): ↑ L L H; L X Qo $\overline{Qo}$
IC2	Analog switch	For control changeover motor 1 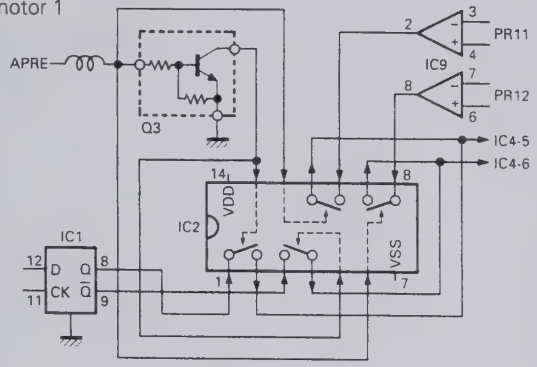
IC3	Analog switch	For control changeover motor 2 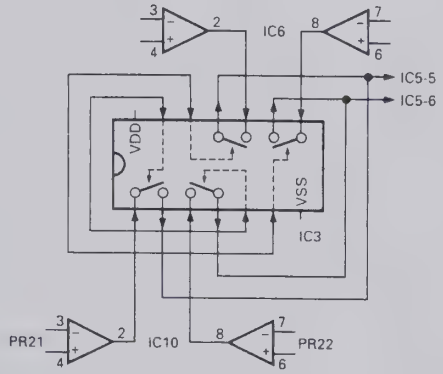
IC4	Motor drive	For motor 1 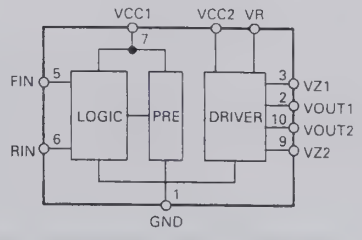
IC5	Motor drive	For motor 2
IC6	Comparator	Amplification difference detection
IC7	AVR	+5V
D1	Detector	Current component amplification detection
D2	Detector	Voltage component amplification detection
D3~8	Switching	Clipper
D10	Switching	Spike absorption
D101~103	Switching	Spike absorption
D105~108	Switching	Spike absorption
D109, 110	Switching	Band data

DESCRIPTION OF COMPONENTS

CONTROL UNIT (X53-356X-XX) (A/4) : CONTROL

0-11 : K,P 0-21 : M 0-22 : M2 0-71 : X 2-71 : E 2-72 : E2 2-73 : E3 2-74 : E9

Ref. No.	Use/Function	Operation/Condition
Q1, 2	Switching	Voltage drop changeover
Q3, 4	Switching	Multiplexer changeover
Q5	Switching	EEPROM write control changeover
Q6~11	Switching	AT control (PR11, PR12, PR21, PR22, APRE, SPED)
Q12, 13	Switching	AT-300 control and input (TS, TT)
Q14, 15	Switching	AT-300 control and output (TS, TT)
Q16	Switching	IC24 control (Reset)
Q17~19, 22	Switching	IC24 control (CH1, 2, 3, 4)
Q20, 24	Switching	IC24 control (DOT)
Q21, 23	Switching	IC24 control (DASH)
Q27	Switching	VBSY signal
Q28	Switching	KEY signal
Q29	Switching	Filter changeover (6kHz)
Q30	Switching	Filter changeover (3kHz)
Q31	Switching	Filter changeover (15kHz)
Q33	Switching	BLNK signal
IC1, 2	Regulator	5V output
IC3	Regulator	8V output
IC4	EEPROM	Adjustment data saving
IC5	Reset, Power supply changeover	System reset and Back-up power supply changeover
IC6	CPU	8 bit microcomputer (Main)
IC7, 10	Inverter	Reverse data
IC8	RAM	8K-byte
IC9, 13	Multiplexer	A/D data changeover
IC11	OR gate	RD/WR signal output
IC12	ROM	64K-byte
IC14	AND gate	Chip select combination for RAM and ROM
IC15	Bidirectional buffer	Data bus input/output changeover
IC16, 22, 23	Extended I/O	8 bit x 4, 4 bit x 1
IC17, 18	Decoder	Converts the address signal into a chip select signal for each IC.
IC19	Latch	Chip select signal latch
IC20, 21	Encoder gate array	Encoder pulse count
IC24	CPU	8 bit microcomputer (Electronic keyer)
IC25, 26	Schmitt trigger	Encoder chattering absorption
IC27	Level shift	RS-232 level shift
IC28	OP amplifier	Buffer
IC29	OR gate	CKY signal and BPC signal combination
D1~3	Protection diode	Power supply
D4	Voltage detector	Voltage drop detection (About 10V)
D5	Protection diode	Reverse current prevention
D6	Protection diode	KEYS line
D7	Protection diode	DASH line
D8	Protection diode	DOT line
D9	Protection diode	MD line
D10	Protection diode	MU line
D11	Protection diode	KEY line
D12	Protection diode	SS line

DESCRIPTION OF COMPONENTS

CONTROL UNIT (X53-356X-XX) (B/4) : SW

Ref. No.	Use/Function	Operation/Condition
Q501, 502	LED switch	
IC501~504	Serial/Parallel	Data conversion for tact switch and LED
D501, 502	LED	
D510~519	LED	

TX-RX UNIT (X57-4620-00)

Ref. No.	Use/Function	Operation/Condition
Q1	Switch	Change SS line to low when VOX active.
Q2	Amplifier	64.22MHz
Q3	Amplifier	REF 20MHz
Q4	Switch	On/Off when squelch open/close (For packet).
Q5, 7	Active LPF	
Q6	Active LPF	PLL loop filter
Q8	VCO	46.32MHz oscillation circuit
Q9, 10	VCO	Output buffer
Q12	Amplifier	LO4 466kHz
Q13, 15	Buffer	TX IF 455kHz
Q14	Amplifier	TX IF 455kHz
Q16	Buffer	Receive signal for DSP processing (11.3kHz)
Q17	Buffer	ACC2 audio output
Q22	Switch	Mute signal (Power on/off)
Q23	Buffer	RX IF 455kHz
Q25	Pulse generator	AF mute
Q26	Switch	Mute signal
Q27	Switch	Mute signal absorption (Mute inhibit when TX)
IC1	DSP A	Main DSP
IC2	DSP B	Sub DSP
IC3	Gate array	For interface
IC4	DSP ROM	Low (D0~D7) 32KB
IC5	DSP ROM	Mid (D8~D15) 32KB
IC6	DSP ROM	High (D16~D23) 32KB
IC7	DSP RAM	8K ward
IC9	PLD	Timing generator
IC15	PLL IC	46.32MHz clock generation
IC16	DAC	Rch : BEEP signal (About 1kHz) Lch : Transmission signal (11.3kHz)
IC17	Active filter	TX (fc = 49.1kHz) 3rd LPF
IC18	Mixer	RX : 455kHz → 11.3kHz TX : 11.3kHz → 455kHz
IC19	Voltage follower, Active LPF	Reference voltage buffer, BEEP LPF (fc = 1.9kHz)
IC20	Voltage follower	Reference voltage buffer
IC21	LPF, Buffer	RX IF 11.3kHz
IC22	Amplifier	Microphone amplifier, unbalanced/balanced modulation
IC23	Multiplexer	MIC, DATA, DRU-3 changeover
IC24	LPF, Buffer	TX microphone amplifier, unbalanced/balanced modulation
IC25	ADC	Rch : Reception signal Lch : Microphone input signal
IC26	DAC	VCA control
IC27	DAC	Rch : Monitor signal Lch : De-modulation signal
IC28	Active LPF	De-modulation signal (fc = 10.6kHz)
IC29	VCA (Electronic volume)	De-modulation signal, BEEP
IC30	Active LPF	Monitor signal (fc = 5.3kHz)
IC31	VCA (Electronic volume)	Packet AF, monitor
IC33	AF amplifier	Audio amplifier

DESCRIPTION OF COMPONENTS

Ref. No.	Use/Function	Operation/Condition
IC34	DAC	Rch : AGC signal Lch : FM modulation signal
IC35	I-V converter, Inverter	AGC and S-meter voltage
IC36	I-V converter, Active LPF	FM modulation signal (fc = 7.2kHz)
IC37	AVR	13.8V → Analog 5V
IC38	AVR	Digital 8V → Digital 5V
IC39	AVR	13.8V → 5V for PLL
IC40	AVR	13.8V → 8V for PLL
IC41, 42	Buffer	VCA control
IC43	Clipper amplifier	RX IF 455kHz
IC44	Inverter	Mute (Power on/off)
D1~4	Reverse current prevention	
D5	VCO bari-cap diode for DSP	64.32MHz oscillation
D7, 8	Reverse current prevention	

SEMICONDUCTOR DATA

PLL : MB86001PF (RF Unit IC507, 509, TX-RX Unit IC15)

■ Terminal connection diagram

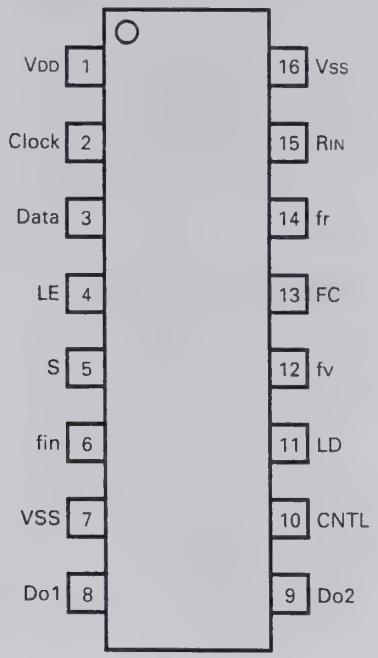

■ Terminal functions

Pin No.	Pin code	I/O	Function
1	VDD	–	Power supply pin.
2	Clock	I	Shift register clock input pin. Serial data is taken in at the rising edge of the clock signal. The input section contains a Schmitt trigger circuit.
3	Data	I	Serial data input pin for setting the divide ratio of each divider. The input section contains a Schmitt trigger circuit.
4	LE	I	Shift register load enable signal input pin. When LE is high, the divider ratio data is transferred to the latch specified by the control bit. This data is used as the divide ratio of each divider. The input section contains a Schmitt trigger circuit.
5	S	I	Switch pin for selecting the latch for setting the divide ratio of each divider. When the S pin is low, latch V1 is selected. When the S pin is high, latch V2 is selected. The divide ratio data is then sent to the divider
6	fin	I	Divider input pin. The input section contains a bias circuit and an amplifier. Connect the voltage control oscillator (such as a VCO) by AC-coupling.
7	Vss	–	Ground pin.
8	Do1	O	Phase comparator output pin (charge pump). The Do1 output level can be reversed by FC. The reference divider output fr and divider output fv are related as follows. On when CNTL is low. fr > fv : High level (FC : Low), Low level (FC : High), fr = fv : High impedance, fr < fv : Low level (FC : Low), High level (FC : High)
9	Do2	O	Phase comparator output pin (charge pump). The relationships between the reference divider output fr and divider output fv are the same as for Do1. On when CNTL is high.
10	CNTL	I	Pin that controls charge pump outputs Do1 and Do2. The relationships between CNTL, Do1 and Do2 are as follows When CNTL is low, Do1 : Output, Do2 : High impedance. When CNTL is high, Do1 : High impedance, Do2 : Output.
11	LD	O	Phase comparator output pin. When PLL is locked, LD is high. When PLL is unlocked, LD is low
12	fv	O	Divider division output monitor pin. A signal is output from the pin in monitor mode. Normally, this pin has high impedance.
13	FC	I	Phase comparator input switch pin.
14	fr	O	Reference divider division output monitor pin. A signal is output from this pin in monitor mode. Normally, this pin has high impedance.
15	RIN	I	Reference divider input pin. The input section contains a bias circuit and an amplifier. Connect the reference oscillator (such as TCXO) by AC-coupling.
16	Vss	–	Ground pin.

SEMICONDUCTOR DATA

Bidirectional buffer : TC74VHC245F (COntrol Unit IC15)

■ Terminal connection diagram

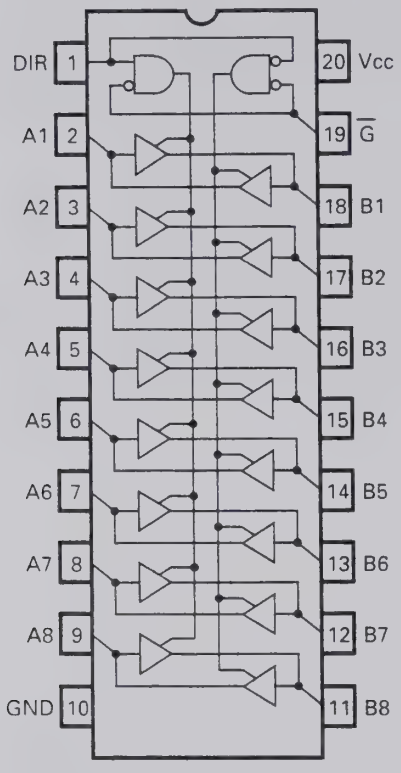

■ Logic diagram

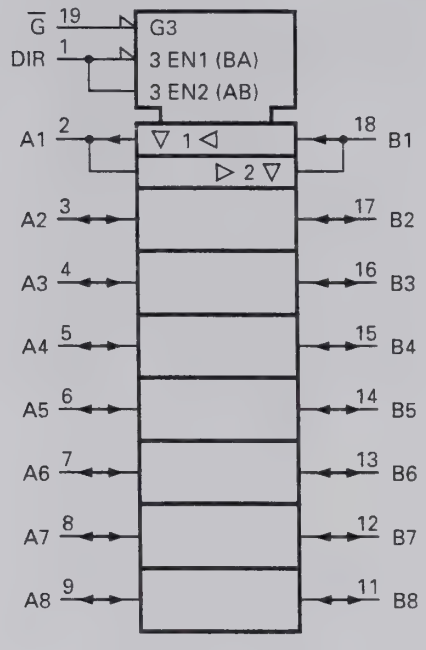

■ Truth table

Input		Function		Output
$\overline{G}$	DIR	A bus	B bus	state
L	L	Output	Input	A=B
L	H	Input	Output	B=A
H	X	High impedance		Z

X : Don't Care Z : High impedance

SEMICONDUCTOR DATA

DC/AC Converter : AK4318-VS (TX-RX Unit IC16, 27)

■ Terminal connection diagram

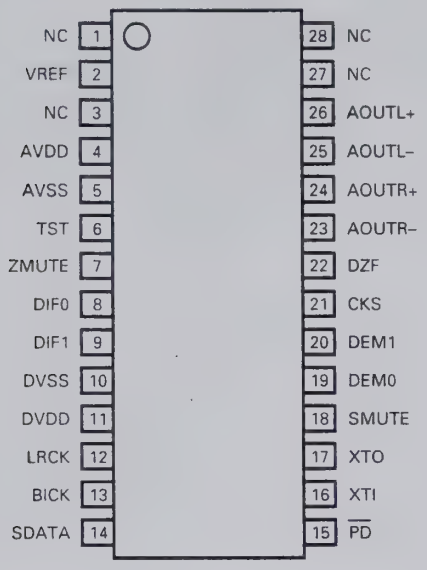

■ Block diagram

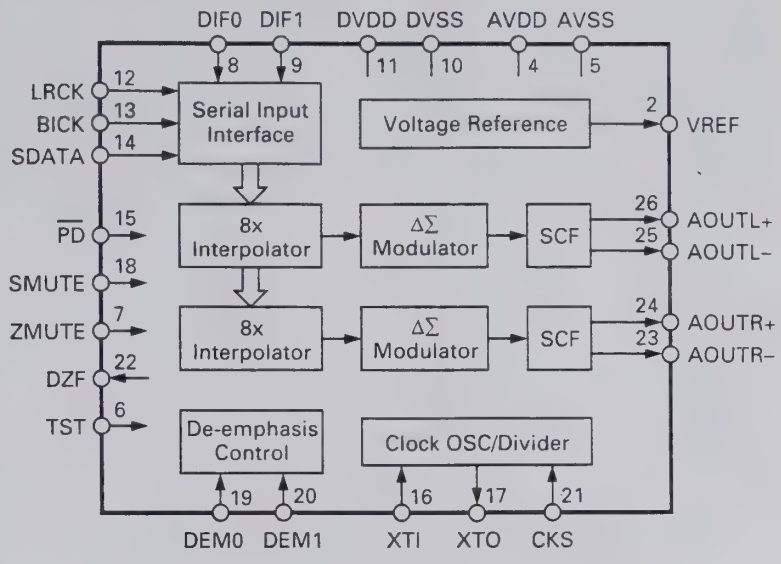

■ Terminal functions

Pin No.	Pin name	I/O	Function
1	NC	–	
2	VREF	O	Reference voltage output pin (AVDD) – 3.75V. The 10µF electrolytic capacitor and 0.1µF ceramic capacitor are connected between VREF and AVDD.
3	NC	–	
4	AVDD	–	Analog power supply pin (+5V).
5	AVSS	–	Analog ground pin.
6	TST	I	Test pin (pull down). Must be open or low.
7	ZMUTE	I	Zero mute pin (pull down). High : Detects zero and mutes output.
8, 9	DIF0, DIF1	I	Input format pin. Supports four modes.
10	DVSS	–	Digital ground pin.
11	DVDD	–	Digital power supply pin (+5V).
12	LRCK	I	L/R clock pin. Determines the input serial data channel.
13	BICK	I	Serial bit clock pin. The clock latches serial data.
14	SDATA	I	Serial data input pin. Number two's complement MSB first.
15	$\overline{PD}$	I	Reset pin. When this pin goes low, the filter and modulator are reset. Make this pin low to reset the filter and modulator when the power is turned on.
16	XTI	I	Clock input pin. Connect a crystal oscillator between XTI and XTO or input the external CMOS clock to XTI. The clock frequency can be selected with the CKS pin.
17	XTO	O	Crystal oscillator output pin. If the crystal oscillator is used, connect it between the XTO and XTI pins. If the external clock is used, open this pin.
18	SMUTE	I	Soft mute pin (pull down). High : Soft mute, Low : Cancel
19, 20	DEM0, DEM1	I	De-emphasis mode pin. Supports three frequencies.
21	CKS	I	Clock select pin. Low : CLK 256 fd, High : CLK 384 fs
22	DZF	O	Zero input detection pin. High when the data input to the SDATA pin for both channels becomes zero 8192 times consecutively.
23	AOUTR–	O	Right-channel analog negative output pin.
24	AOUTR+	O	Right-channel analog positive output pin.
25	AOUTL–	O	Left-channel analog negative output pin.
26	AOUTL+	O	Left-channel analog positive output pin.
27, 28	NC	–	

SEMICONDUCTOR DATA

AC/DC Converter : AK5340-VS (TX-RX Unit IC25)

■ Terminal connection diagram

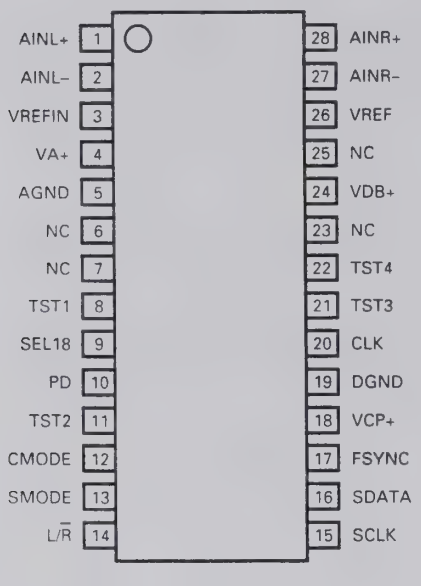

■ Block diagram

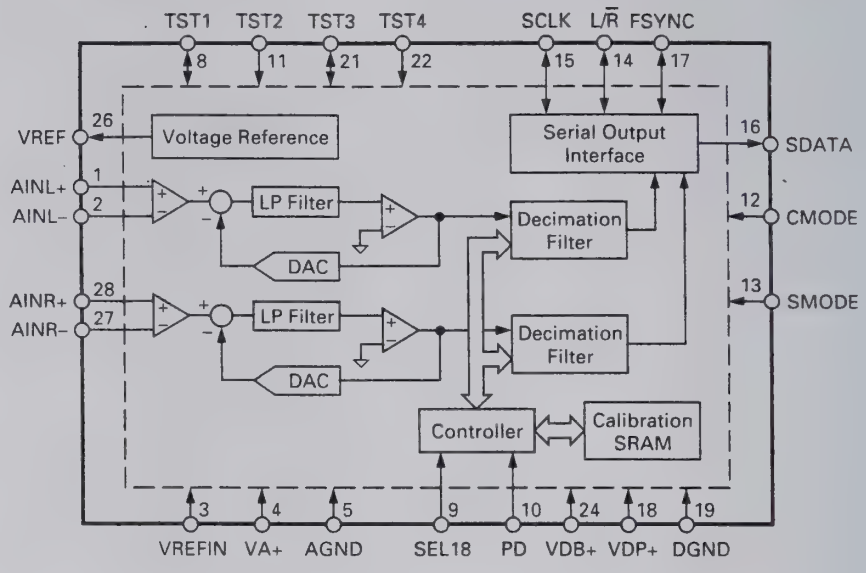

■ Terminal functions

Pin No.	Pin name	I/O	Function
1	AINL+	I	Left-channel analog non-inverted input pin.
2	AINL–	I	Left-channel analog inverted input pin.
3	VREFIN	I	Reference voltage input pin. Normally connect to the VREF pin. The input range is 1.6 times the difference between VA+ and the voltage input to this pin.
4	VA+	–	Analog section analog power supply pin (+5V).
5	AGND	–	Analog section analog ground pin.
6, 7	NC	–	
8	TST1	–	Test pin. Open or connect to DGND.
9	SEL18	I	Output data length select pin (with pull down resistor). Low : 16 bits, High : 18 bits
10	PD	I	Power down pin. High : Power down mode. Offset calibration starts at a falling edge. When the power is turned on or the clock frequency is changed, calibration must be carried out.
11	TST2	–	Test pin. Open or connect to DGND.
12	CMODE	I	Master clock select pin. Low : CLK 256 fs (12.288MHz @fs : 48kHz), High : CLK 384 fs (18.432MHz @fs : 48kHz)
13	SMODE	I	Interface clock select pin. Set the input/output of each of the L/R̄, SCLK, and FSYNC clock pins. Low : Save mode (all input pins), High : Master mode (all output pins)
14	L/R̄	I/O	Input channel select pin. Slave mode : The fs clock is input. Lch MSB data is output at a rising edge and Rch MSB data is output at a falling edge of the clock signal. Master mode : The fs clock is output. SDATA is output one clock after the L/R̄ edge. High when the power is down (PD : High).
15	SCLK	I/O	Serial data clock pin. One bit of data is output at a falling edge of the clock. Slave mode : Normally a 32 to 64 fs clock is input. Master mode : A 64 fs clock is output. Low when the power is down (PD : High).
16	SDATA	O	Serial data output pin. Data is number two's complement and the MSB is output first. Goes low after 16/18 bits are output. Low when the power is down (PD : High).
17	FSYNC	I/O	Frame synchronization clock pin. Slave mode : SDATA output is enabled when the pin is high. Master mode : The 2 fs clock is output. High when 16-bit data is output. The two low-order bits are low when 18-bit output is selected. Low when the power is down (PD : High).
18	VDP+	–	Digital section power supply pin (+5V).
19	DGND	–	Digital section ground pin.
20	CLK	I	Master clock input pin. When CMODE is high, CLK : 384 fs. When CMODE is low, CLK : 256 fs.
21, 22	TST3, TST4	–	Test pin. Open or connect to DGND.

SEMICONDUCTOR DATA

Pin No.	Pin name	I/O	Function
23	NC	–	
24	VDB+	–	Digital section power supply pin (+5V). (Silicon PCB potential)
25	NC	–	
26	VREF	O	Reference voltage output pin (VA+) – 2.6V. Output based on VA+. Normally connect this output to the VREFIN pin.
27	AINR–	I	Right-channel analog inverted output pin.
28	AINR+	I	Right-channel analog non-inverted output pin.

DC/AC Converter : PCM69AU (TX-RX Unit IC34)

■ Terminal connection diagram

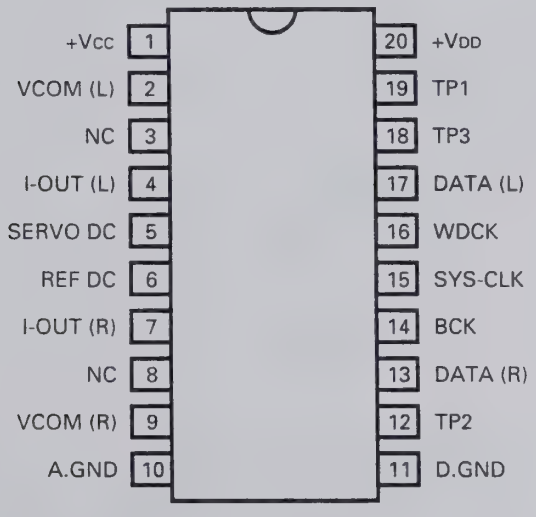

■ Terminal functions

Pin No.	Pin name	Function
1	+VCC	Analog Positive power supply
2	VCOM (L)	Lch V common
3	NC	
4	I-OUT (L)	Lch current output
5	SERVO DC	Servo filter
6	REF DC	Reference filter
7	I-OUT (R)	Rch current output
8	NC	
9	VCOM (R)	Rch V common
10	A. GND	Analog common
11	D. GND	digital common
12	TP2	Test pin 2
13	DATA (R)	Rch data input
14	BCK	Bit clock input
15	SYS-CLK	System clock input
16	WDCK	Word clock input
17	DATA (L)	Lch data input
18	TP3	Test pin 3
19	TP1	Test pin 1
20	+VDD	Digital positive power supply

PARTS LIST

CAPACITORS

CC 45 TH 1H 220 J
1 2 3 4 5 6

1 = Type ... ceramic, electrolytic, etc.
2 = Shape ... round, square, ect.
3 = Temp. coefficient
4 = Voltage rating
5 = Value
6 = Tolerance

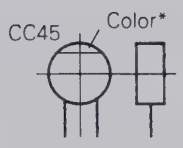

• Capacitor value

010 = 1pF
100 = 10pF
101 = 100pF
102 = 1000pF = 0.001μF
103 = 0.01μF

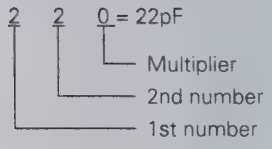

• Temperature coefficient

1st Word	C	L	P	R	S	T	U
Color*	Black	Red	Orange	Yellow	Green	Blue	Violet
ppm/°C	0	–80	–150	–220	–330	–470	–750

2nd Word	G	H	J	K	L
ppm/°C	±30	±60	±120	±250	±500

Example : CC45TH = –470 ± 60ppm/°C

• Tolerance

Code	C	D	G	J	K	M	X	Z	P	No code
(%)	±0.25	±0.5	±2	±5	±10	±20	+40	+80	+100	More than 10μF – 10 ~ +50
							–20	–20	–0	Less than 4.7μF –10 ~ +75

Less than 10pF

Code	B	C	D	F	G
(pF)	±0.1	±0.25	±0.5	±1	±2

• Voltage rating

1st word \ 2nd word	A	B	C	D	E	F	G	H	J	K	V
0	1.0	1.25	1.6	2.0	2.5	3.15	4.0	5.0	6.3	8.0	–
1	10	12.5	16	20	25	31.5	40	50	63	80	35
2	100	125	160	200	250	315	400	500	630	800	–
3	1000	1250	1600	2000	2500	3150	4000	5000	6300	8000	–

• Chip capacitors (Refer to the table above except dimension)

(EX) CC 73 F SL 1H 000 J
1 2 3 4 5 6 7
(Chip) (CH, RH, UJ, SL)

(EX) CK 73 F F 1H 000 Z
1 2 3 4 5 6 7
(Chip) (B, F)

RESISTORS

• Chip resistor (Carbon)

(EX) RD 73 E B 2B 000 J
1 2 3 4 5 6 7
(Chip) (B,F)

• Carbon resistor (Normal type)

(EX) RD 14 B B 2C 000 J
1 2 3 4 5 6 7

1 = Type ... ceramic, electrolytic, etc.
2 = Shape ... round, square, ect.
3 = Dimension
4 = Temp. coefficient
5 = Voltage rating
6 = Value
7 = Tolerance

Dimension

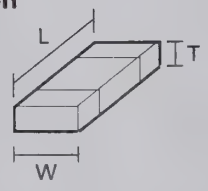

• Dimension (Chip capacitor)

Dimension code	L	W	T
Empty	5.6 ± 0.5	5.0 ± 0.5	Less than 2.0
E	3.2 ± 0.2	1.6 ± 0.2	Less than 1.25
F	2.0 ± 0.3	1.25 ± 0.2	Less than 1.25

• Dimension (Chip resistor)

Dimension code	L	W	T	Wattage
E	3.2 ± 0.2	1.6 ± 0.2	0.57	2B
F	2.0 ± 0.3	1.25 ± 0.2	0.45	2A

Rating wattage

Code	Wattage	Code	Wattage	Code	Wattage
2A	1/10W	2E	1/4W	3A	1W
2B	1/8W	2H	1/2W	3D	2W
2C	1/6W				

PARTS LIST

*New Parts. ⚠ indicates safety critical components.
Parts without **Parts No.** are not supplied.
Les articles non mentionnes dans le **Parts No.** ne sont pas fournis.
Teile ohne **Parts No.** werden nicht geliefert.

L : Scandinavia **K**: USA **P** : Canada
Y : PX (Far East, Hawaii) **T** : England **E** : Europe
Y : AAFES (Europe) **X**: Australia **M**. Other Areas

TS-870S

Ref. No.	Address	New parts	Parts No.	Description	Destination
			TS-870S		
1	1B	*	A01-2097-01	METALLIC CABINET (UPPER)	
2	3B	*	A01-2098-01	METALLIC CABINET (LOWER)	
33	3A,2D	*	A62-0382-02	PANEL ASSY	
3	2C	*	A62-0384-02	PANEL	
4	2D	*	B10-1227-03	FRONT GLASS	
5	2D	*	B11-1123-04	REFLECTOR	
6	1E	*	B38-0736-05	DISPLAY ASSY	
7	2B		B42-3343-04	S/NO LABBL	
8	3N		B42-5526-04	STICKER	K
9	2C		B43-1045-04	BADGE (KENWOOD)	
10	2C	*	B43-1101-04	BADGE (DSP)	
11	3N		B44-2163-04	UPC CORD LABEL	
12	1O		B46-0310-03	WARRNTY CARD	EE2E3E9
12	1O		B46-0410-40	WARRNTY CARD	K
12	1O		B46-0422-00	WARRNTY CARD	P
13	1O	*	B62-0542-00	INSTRUCTION MANUAL (ENGLISH)	
14	1O	*	B62-0543-00	INSTRUCTION MANUAL (SPANISH)	MM2E2E3
15	1O	*	B62-0544-00	INSTRUCTION MANUAL (NETHERLAND)	MM2E2E3
16	1O	*	B62-0545-00	INSTRUCTION MANUAL (FRENCH)	PMM2
16	1O	*	B62-0545-00	INSTRUCTION MANUAL (FRENCH)	E2E3E9
17	1O	*	B62-0546-00	INSTRUCTION MANUAL (GERMAN)	E
18	1O	*	B62-0547-00	INSTRUCTION MANUAL (ITALIAN)	E
19	2B	*	B72-0911-04	MODEL NAME PLATE	KMM2XP
19	2B	*	B72-0912-04	MODEL NAME PLATE	EE2E3E9
20	1H		E04-0167-05	RF COAXIAL CABLE RECEPTACLE (M)	
21	1N		E07-0751-05	DIN PLUG (7P) ACSY	
22	1N		E07-1351-05	DIN PLUG (13P) ACSY	
23	1H		E23-0992-04	EARTH LUG (ANT)	
24	1N	*	E30-3157-15	DC CORD ACSY	
W51	2K,3K		E31-3433-05	LEAD WIRE WITH MINIPIN PLUG	
W52	3I,4K		E37-0062-05	LEAD WIRE WITH MINIPIN PLUG	
W53	2I,4K	*	E37-0518-05	LEAD WIRE WITH MINIPIN PLUG	
W54	1I,2I	*	E37-0519-05	LEAD WIRE WITH MINIPIN PLUG	
W56	1J,2K	*	E37-0521-05	LEAD WIRE WITH MINIPIN PLUG	
W57	1I,4K	*	E37-0522-05	LEAD WIRE WITH MINIPIN PLUG	
W58	1I	*	E37-0523-05	FLAT CABLE	
W59	2I,1J	*	E37-0524-05	FLAT CABLE	
W60	2A	*	E37-0526-05	FLAT CABLE	
W61	2A	*	E37-0527-05	FLAT CABLE	
W62	3I	*	E37-0528-05	FLAT CABLE	
W63-1	4J	*	E37-0529-05	FLAT CABLE	
W63-2	3I,4I	*	E37-0529-05	FLAT CABLE	
W64	4J	*	E37-0530-05	FLAT CABLE	
W65	3I	*	E37-0531-05	FLAT CABLE	
W66	3I,4I	*	E37-0532-05	FLAT CABLE	
W67	2A	*	E37-0533-05	FLAT CABLE	
W68	2A	*	E37-0534-05	FLAT CABLE	
W69	2I,4I	*	E37-0535-05	LEAD WIRE WITH MINIPIN PLUG	
W70	2A	*	E37-0537-05	LEAD WIRE WITH CONNECTOR	
W71	1I,1J	*	E37-0538-05	LEAD WIRE WITH CONNECTOR	
W72	1I,4K	*	E37-0540-05	LEAD WIRE WITH CONNECTOR	
W73	1I,1J	*	E37-0541-15	LEAD WIRE WITH CONNECTOR	
W74	1K	*	E37-0542-05	LEAD WIRE WITH CONNECTOR	
W75	2J	*	E37-0543-05	LEAD WIRE WITH CONNECTOR	
W76	2A	*	E37-0547-15	LEAD WIRE WITH CONNECTOR (SP)	
W77	2J	*	E37-0548-05	LEAD WIRE WITH CONNECTOR	
W78	2I,4I	*	E37-0549-05	LEAD WIRE WITH CONNECTOR	
W79	2A	*	E37-0550-15	LEAD WIRE WITH CONNECTOR	
W80	2I,4J	*	E37-0551-05	LEAD WIRE WITH CONNECTOR	
W81	1I,4I	*	E37-0552-05	LEAD WIRE WITH CONNECTOR	
W82	2K,3K	*	E37-0569-05	LEAD WIRE WITH MINIPIN PLUG	
W83	–	*	E37-0570-05	LEAD WIRE WITH CONNECTOR (VS-2)	
26	1N		F05-2531-05	FUSE (25A/32V) ACSY	
27	1N		F06-4029-05	FUSE (4A/250V) ACSY	
28	2G	*	F09-0449-05	FAN MOTOR	
29	3G		F10-1206-04	SHIELDING COVER (EARTH SPRING)	
30	2B,1G		F10-1468-13	SHIELDING COVER (FINAL)	
31	1G		G02-0574-04	FLAT SPRING (AVR)	
32	2G	*	G02-0767-04	FLAT SPRING (THERMMISTOR)	
34	1A		G10-0697-04	FIBROUS SHEET (SP)	
35	1D		G10-0702-04	FIBROUS SHEET (SUB 2)	
36	1A		G10-0703-04	FIBROUS SHEET (CASE)	
39	1B		G13-0934-04	CUSHION (UPPER CASE)	
40	2G		G13-1310-04	CUSHION (FAN)	
41	4F	*	G13-1327-04	CUSHION (DRU-3)	
42	2D	*	G13-1480-04	CUSHION (KNOB)	
43	2D	*	G13-1481-04	CUSHION (KNOB)	
44	2D	*	G13-1482-04	CUSHION (KNOB)	
45	2D	*	G13-1483-04	CUSHION (KNOB)	
46	1A	*	G13-1498-04	CUSHION (SP)	
47	3B	*	G13-1511-04	CUSHION (LOWER CASE)	
50	2N	*	H10-2791-01	POLYSTYRENE FOAMED FIXTURE (F)	
51	2O	*	H10-2792-11	POLYSTYRENE FOAMED FIXTURE (R)	
52	1N	*	H13-0963-04	CARTON BOARD	
53	2O		H20-1437-03	PROTECTION COVER	
54	1N		H25-0029-04	BAG (FUSE)	
55	1N		H25-0079-04	BAG (MIC)	
56	1N		H25-0708-04	BAG (DC CORD)	
57	2O	*	H52-0730-02	ITEM CARTON CASE	
58	3O	*	H62-0641-03	OUTER PACKING CASE	
59	3B		J02-0049-14	FOOT (REAR)	
60	1A,3A		J02-0441-05	FOOT (SIDE)	
61	3A	*	J02-0474-05	FOOT (FRONT)	
62	2G		J21-4326-03	HARDWARE FIXTURE (FAN)	
63	1D	*	J21-4496-05	HARDWARE FIXTURE (PHONE JACK)	
64	2D		J31-0141-04	COLLAR (MIC)	
65	2H	*	J32-0923-04	HEXAGON BOSS	
–			J61-0307-05	BAND	
70	1B		K01-0416-05	HANDLE ASSY	
71	2C	*	K21-1102-04	KNOB (MAIN · WITH SCREW)	
72	2C	*	K29-4966-04	KNOB RING (MAIN)	
73	2D	*	K29-4967-03	KNOB (FILTER)	
74	2C	*	K29-4968-03	KNOB (M.CH,RIT : WITH SPRING)	
75	2C	*	K29-4969-03	KNOB (INSIDE)	
76	2C	*	K29-4970-03	KNOB (OUTSIDE)	
77	1C	*	K29-4978-03	KNOB (POWER)	
78	1D	*	K29-4979-03	KNOB (UP/DOWN)	

PARTS LSIT

TS-870S
RF UNIT (X44-3210-00)

Ref. No.	Address	New parts	Parts No.	Description	Destination
79	1C	*	K29-4980-03	KNOB (ANT, etc.)	
80	1D	*	K29-4981-03	KNOB (LED)	
81	1C,1D	*	K29-4982-03	KNOB (AT TUNE, etc.)	
82	1D	*	K29-4983-03	KNOB (LED)	
83	1C	*	K29-4984-03	KNOB (QUICK MEMO)	
84	1C	*	K29-4985-03	KNOB (LSB/USB)	
85	1C	*	K29-4986-03	KNOB (CW/-R)	
86	1C	*	K29-4987-03	KNOB (FSK/-R)	
87	1C	*	K29-4988-03	KNOB (FM/AM)	
88	1D	*	K29-4989-03	KNOB (AUTO NOTCH)	
89	1D	*	K29-4990-03	KNOB (BEAT CANCEL)	
90	1D	*	K29-4991-03	KNOB (N.R)	
91	1D	*	K29-4992-03	KNOB (TX EQ.)	
A	1H		N09-0372-04	SCREW (DC)	
B	1H		N09-0682-04	SCREW (GND)	
C	3F		N09-2051-05	SCREW	X
D	1H		N11-0040-46	FLANGE NUT (GND)	
E	1H		N14-0509-05	NUT (GND)	
F	1H		N15-1040-46	FLAT WASHER (GND)	
G	1D,1E		N32-2606-46	FLAT HEAD SCREW	
H	2A,3A		N32-3006-46	FLAT HEAD SCREW (SUB PANEL)	
I	1B,3B		N33-3006-41	OVAL HEAD SCREW (CASE)	
J	2A,2F		N87-2606-46	BRAZIER HEAD SCREW (UNIT,RL)	
K	1A 1H		N87-3006-46	BRAZIER HEAD SCREW (AT,FAN)	
L	2G,2H		N87-3008-46	BRAZIER HEAD SCREW	
M	2B,1G		N88-2608-46	FLAT HEAD SCREW (FINAL)	
N	2D		N90-3008-46	TP HEAD MACHIN SCREW (PANEL)	
P	3A,3B		N91-3010-46	TP HEAD TAPPING SCREW (FOOT)	
SP	1A		T07-0252-15	LOUDSPEAKER (8 ohm 1W)	
MIC	1N		T91-0352-15	MICROPHONE ACSY	
93	1E		W02-1836-05	ENCODER	
BATT	2A	*	W09-0873-05	LITHIUM CELL (3V 220MAh)	

RF UNIT (X44-3210-00)

C1			CK73FB1H103K	CHIP C	0.010UF	K	
C2			CC73FCH1H121J	CHIP C	120PF	J	
C3			CK73FF1C105Z	CHIP C	1.0UF	Z	
C4,5			CK73FB1H103K	CHIP C	0.010UF	K	
C6			CK73FB1E103K	CHIP C	0.010UF	K	
C7			CK73FB1H103K	CHIP C	0.010UF	K	
C8			CK73FB1H102K	CHIP C	1000PF	K	
C10			CK73FB1H103K	CHIP C	0.010UF	K	
C14			CK73FB1E103K	CHIP C	0.010UF	K	
C15			CK73FF1C105Z	CHIP C	1.0UF	Z	
C16			CK73FF1E104Z	CHIP C	0.10UF	Z	
C17			CK73FF1C105Z	CHIP C	1.0UF	Z	
C18			CK73FB1E103K	CHIP C	0.010UF	K	
C19			CK73FB1H182K	CHIP C	1800PF	K	
C21			CK73FB1H682K	CHIP C	6800PF	K	
C22			CK73FB1H182K	CHIP C	1800PF	K	
C23			CK73FF1E104Z	CHIP C	0.10UF	Z	
C27			CK73FF1E104Z	CHIP C	0.10UF	Z	
C28			CE04EW1C100M	ELECTRO	10UF	16WV	
C29-31			CK73FF1E104Z	CHIP C	0.10UF	Z	
C32			CE04EW1C100M	ELECTRO	10UF	16WV	
C33			CK73FF1C105Z	CHIP C	1.0UF	Z	
C34			CK73FF1E104Z	CHIP C	0.10UF	Z	
C35			CC73FCH1H050C	CHIP C	5.0PF	C	
C36			CK73FB1H103K	CHIP C	0.010UF	K	
C39,40			CK73FB1E103K	CHIP C	0.010UF	K	
C47			CK73FB1H103K	CHIP C	0.010UF	K	
C48			CK73FB1H223K	CHIP C	0.022UF	K	
C49			CK73FB1H103K	CHIP C	0.010UF	K	
C50			CK73FF1E104Z	CHIP C	0.10UF	Z	
C51			CK73FF1C105Z	CHIP C	1.0UF	Z	
C52			CK73FB1H222K	CHIP C	2200PF	K	
C53			CK73FB1H682K	CHIP C	6800PF	K	
C54			CK73FB1H222K	CHIP C	2200PF	K	
C55			CK73FF1E104Z	CHIP C	0.10UF	Z	
C56			CK73FF1C105Z	CHIP C	1.0UF	Z	
C57			CK73FB1H472K	CHIP C	4700PF	K	
C58			CK73FF1E104Z	CHIP C	0.10UF	Z	
C59			CK73FF1C105Z	CHIP C	1.0UF	Z	
C60			CC73FSL1H821J	CHIP C	820PF	J	
C61			CK73FF1C105Z	CHIP C	1.0UF	Z	
C62			CK73FB1H472K	CHIP C	4700PF	K	
C63			CK73FF1E104Z	CHIP C	0.10UF	Z	
C64			CK73FB1H222K	CHIP C	2200PF	K	
C65			CK73FF1E104Z	CHIP C	0.10UF	Z	
C66			CK73FF1C105Z	CHIP C	1.0UF	Z	
C67			CK73FB1H561K	CHIP C	560PF	K	
C68			CK73FF1C105Z	CHIP C	1.0UF	Z	
C69			CK73FB1H222K	CHIP C	2200PF	K	
C70			CK73FF1E104Z	CHIP C	0.10UF	Z	
C71			CK73FB1H102K	CHIP C	1000PF	K	
C72			CK73FF1E104Z	CHIP C	0.10UF	Z	
C73			CK73FF1C105Z	CHIP C	1.0UF	Z	
C74			CC73FSL1H271J	CHIP C	270PF	J	
C75			CK73FF1C105Z	CHIP C	1.0UF	Z	
C76			CK73FB1H102K	CHIP C	1000PF	K	
C77,78			CK73FF1E104Z	CHIP C	0.10UF	Z	
C80			CK73FF1C105Z	CHIP C	1.0UF	Z	
C81			CC73FCH1H050C	CHIP C	5.0PF	C	
C83			CC73FCH1H050C	CHIP C	5.0PF	C	
C85			CC73FCH1H050C	CHIP C	5.0PF	C	
C87			CK73FF1C105Z	CHIP C	1.0UF	Z	
C88			CK73FF1E104Z	CHIP C	0.10UF	Z	
C89			CK73FB1H102K	CHIP C	1000PF	K	
C90			CK73FF1E104Z	CHIP C	0.10UF	Z	
C91			CK73FF1C105Z	CHIP C	1.0UF	Z	
C92			CC73FCH1H121J	CHIP C	120PF	J	
C93			CK73FF1C105Z	CHIP C	1.0UF	Z	
C94			CK73FB1H102K	CHIP C	1000PF	K	
C95			CK73FF1E104Z	CHIP C	0.10UF	Z	
C96			CK73FB1H102K	CHIP C	1000PF	K	
C97			CK73FF1E104Z	CHIP C	0.10UF	Z	
C98			CK73FF1C105Z	CHIP C	1.0UF	Z	
C99			CC73FCH1H820J	CHIP C	82PF	J	
C100			CK73FF1C105Z	CHIP C	1.0UF	Z	
C101			CK73FB1H102K	CHIP C	1000PF	K	
C102,103			CK73FF1E104Z	CHIP C	0.10UF	Z	
C105			CK73FF1C105Z	CHIP C	1.0UF	Z	
C106			CC73FCH1H040C	CHIP C	4.0PF	C	
C108			CC73FCH1H040C	CHIP C	4.0PF	C	
C110			CK73FF1C105Z	CHIP C	1.0UF	Z	

PARTS LIST

RF UNIT (X44-3210-00)

Ref. No.	Address	New parts	Parts No.	Description			Destination
C111			CK73FF1E104Z	CHIP C	0.10UF	Z	
C112			CC73FSL1H391J	CHIP C	390PF	J	
C113			CK73FF1E104Z	CHIP C	0.10UF	Z	
C114			CK73FF1C105Z	CHIP C	1.0UF	Z	
C115			CC73FCH1H680J	CHIP C	68PF	J	
C116			CK73FF1C105Z	CHIP C	1.0UF	Z	
C117			CC73FSL1H151J	CHIP C	150PF	J	
C118,119			CK73FF1E104Z	CHIP C	0.10UF	Z	
C121			CK73FF1C105Z	CHIP C	1.0UF	Z	
C122			CC73FCH1H050C	CHIP C	5.0PF	C	
C124			CC73FCH1H050C	CHIP C	5.0PF	C	
C126			CK73FF1C105Z	CHIP C	1.0UF	Z	
C127			CK73FF1E104Z	CHIP C	0.10UF	Z	
C128			CC73FCH1H221J	CHIP C	220PF	J	
C129			CK73FF1E104Z	CHIP C	0.10UF	Z	
C130			CK73FF1C105Z	CHIP C	1.0UF	Z	
C131			CC73FCH1H330J	CHIP C	33PF	J	
C132			CK73FF1C105Z	CHIP C	1.0UF	Z	
C133			CK73FF1E104Z	CHIP C	0.10UF	Z	
C134			CK73FB1H103K	CHIP C	0.010UF	K	
C135			CC73FCH1H121J	CHIP C	120PF	J	
C136			CK73FF1E104Z	CHIP C	0.10UF	Z	
C137			CC73FSL1H221J	CHIP C	220PF	J	
C138			CK73FB1E103K	CHIP C	0.010UF	K	
C139			CK73FF1E104Z	CHIP C	0.10UF	Z	
C140,141			CK73FB1E103K	CHIP C	0.010UF	K	
C142			CK73FF1E104Z	CHIP C	0.10UF	Z	
C143			CC73FCH1H390J	CHIP C	39PF	J	
C144,145			CK73FB1E103K	CHIP C	0.010UF	K	
C146,147			CK73FF1E104Z	CHIP C	0.10UF	Z	
C148			CK73FB1E103K	CHIP C	0.010UF	K	
C149			CK73FF1E104Z	CHIP C	0.10UF	Z	
C150,151			CK73FF1C105Z	CHIP C	1.0UF	Z	
C152,153			CK73FF1E104Z	CHIP C	0.10UF	Z	
C154			CC73FCH1H101J	CHIP C	100PF	J	
C155			CC73FCH1H150J	CHIP C	15PF	J	
C156			CK73FB1E103K	CHIP C	0.010UF	K	
C157			CC73FSL1H221J	CHIP C	220PF	J	
C158			CK73FB1H471K	CHIP C	470PF	K	
C159			CK73FB1H102K	CHIP C	1000PF	K	
C160			CC73FCH1H470J	CHIP C	47PF	J	
C161			CC73FCH1H820J	CHIP C	82PF	J	
C162			CK73FF1E104Z	CHIP C	0.10UF	Z	
C163			CK73FB1E103K	CHIP C	0.010UF	K	
C164			CC73FSL1H471J	CHIP C	470PF	J	
C165			CK73FB1E103K	CHIP C	0.010UF	K	
C166,167			CK73FF1E104Z	CHIP C	0.10UF	Z	
C168			CK73FB1E103K	CHIP C	0.010UF	K	
C169			CC73FCH1H680J	CHIP C	68PF	J	
C170			CK73FF1E104Z	CHIP C	0.10UF	Z	
C171			CC73FCH1H470J	CHIP C	47PF	J	
C172,173			CK73FB1E103K	CHIP C	0.010UF	K	
C174			CC73FSL1H471J	CHIP C	470PF	J	
C175			CC73FCH1H470J	CHIP C	47PF	J	
C176			CE04EW1C470M	ELECTRO	47UF	16WV	
C177			CC73FCH1H050C	CHIP C	5.0PF	C	
C178			CC73FCH1H680J	CHIP C	68PF	J	
C179			CK73FF1E104Z	CHIP C	0.10UF	Z	
C180			CC73FCH1H020C	CHIP C	2.0PF	C	

Ref. No.	Address	New parts	Parts No.	Description			Destination
C181			CC73FCH1H050C	CHIP C	5.0PF	C	
C182			CK73FB1E103K	CHIP C	0.010UF	K	
C184			CC73FCH1H050C	CHIP C	5.0PF	C	
C185			CC73FCH1H220J	CHIP C	22PF	J	
C186			CC73FCH1H050C	CHIP C	5.0PF	C	
C187			CC73FCH1H1R5C	CHIP C	1.5PF	C	
C188			CC73FCH1H220J	CHIP C	22PF	J	
C189			CC73FCH1H0R5C	CHIP C	0.5PF	C	
C190			CK73FB1E103K	CHIP C	0.010UF	K	
C191			CC73FSL1H681J	CHIP C	680PF	J	
C192,193			CK73FB1H102K	CHIP C	1000PF	K	
C194			CC73FSL1H331J	CHIP C	330PF	J	
C195			CC73FSL1H471J	CHIP C	470PF	J	
C196			CK73FB1H102K	CHIP C	1000PF	K	
C197			CK73FB1E103K	CHIP C	0.010UF	K	
C198			CC73FCH1H020C	CHIP C	2.0PF	C	
C199			CK73FB1E103K	CHIP C	0.010UF	K	
C201-206			CK73FB1E103K	CHIP C	0.010UF	K	
C207			CC73FCH1H470J	CHIP C	47PF	J	
C208			CK73FF1E104Z	CHIP C	0.10UF	Z	
C209			CK73FB1H102K	CHIP C	1000PF	K	
C211,212			CK73FF1E104Z	CHIP C	0.10UF	Z	
C214			CK73FB1E103K	CHIP C	0.010UF	K	
C215			CK73FF1E104Z	CHIP C	0.10UF	Z	
C216			CE04EW1C100M	ELECTRO	10UF	16WV	
C217			CK73FF1E104Z	CHIP C	0.10UF	Z	
C218			CC73FCH1H470J	CHIP C	47PF	J	
C219			CK73FF1E104Z	CHIP C	0.10UF	Z	
C220			CE04EW1H010M	ELECTRO	1.0UF	50WV	
C221-223			CK73FF1E104Z	CHIP C	0.10UF	Z	
C224			CK73FB1E103K	CHIP C	0.010UF	K	
C225			CK73FB1H102K	CHIP C	1000PF	K	
C226-228			CK73FB1E103K	CHIP C	0.010UF	K	
C229			CC73FCH1H050C	CHIP C	5.0PF	C	
C230			CK73FB1E103K	CHIP C	0.010UF	K	
C231			CC73FCH1H220J	CHIP C	22PF	J	
C232			CK73FF1E104Z	CHIP C	0.10UF	Z	
C233			CK73FB1H102K	CHIP C	1000PF	K	
C234			CK73FF1E104Z	CHIP C	0.10UF	Z	
C236			CK73FB1E103K	CHIP C	0.010UF	K	
C237			CC73FCH1H220J	CHIP C	22PF	J	
C238			CK73FB1E103K	CHIP C	0.010UF	K	
C239			CK73FB1H471K	CHIP C	470PF	K	
C240,241			CK73FB1E103K	CHIP C	0.010UF	K	
C242			CC73FSL1H471J	CHIP C	470PF	J	
C243,244			CK73FB1E103K	CHIP C	0.010UF	K	
C245			CC73FSL1H471J	CHIP C	470PF	J	
C246			CC73FCH1H010C	CHIP C	1.0PF	C	
C247			CC73FSL1H471J	CHIP C	470PF	J	
C248			CK73FB1E103K	CHIP C	0.010UF	K	
C249			CC73FCH1H0R5C	CHIP C	0.5PF	C	
C250			CC73FCH1H010C	CHIP C	1.0PF	C	
C251-253			CK73FB1E103K	CHIP C	0.010UF	K	
C254			CK73FF1E104Z	CHIP C	0.10UF	Z	
C256,257			CK73FB1E103K	CHIP C	0.010UF	K	
C260			CK73FB1E103K	CHIP C	0.010UF	K	
C262,263			CK73FB1E103K	CHIP C	0.010UF	K	
C265-273			CK73FB1E103K	CHIP C	0.010UF	K	
C274			CC73FCH1H180J	CHIP C	18PF	J	

PARTS LSIT

RF UNIT (X44-3210-00)

Ref. No.	Address	New parts	Parts No.	Description			Destination
C275			CC73FCH1H150J	CHIP C	15PF	J	
C276			CC73FCH1H180J	CHIP C	18PF	J	
C277-279			CK73FB1E103K	CHIP C	0.010UF	K	
C280			CC73FCH1H101J	CHIP C	100PF	J	
C281,282			CC73FCH1H220J	CHIP C	22PF	J	
C283			CC73FCH1H330J	CHIP C	33PF	J	
C285			CK73FB1E223K	CHIP C	0.022UF	K	
C286			CE04EW1H010M	ELECTRO	1.0UF	50WV	
C287			CE04EW1C100M	ELECTRO	10UF	16WV	
C288			CK73FB1H473K	CHIP C	0.047UF	K	
C289			CE04EW1C100M	ELECTRO	10UF	16WV	
C290			CK73FB1E103K	CHIP C	0.010UF	K	
C291			CE04EW1HR47M	ELECTRO	0.47UF	50WV	
C292			CK73FB1E103K	CHIP C	0.010UF	K	
C293			CC73FCH1H101J	CHIP C	100PF	J	
C294			CK73FF1E104Z	CHIP C	0.10UF	Z	
C295-298			CK73FB1E103K	CHIP C	0.010UF	K	
C299,300			CK73FB1H103K	CHIP C	0.010UF	K	
C301			CK73FB1H102K	CHIP C	1000PF	K	
C302			CK73FB1H103K	CHIP C	0.010UF	K	
C303			CK73FB1H102K	CHIP C	1000PF	K	
C304			CK45FE2H222P	CERAMIC	2200PF	P	
C305			CK73FB1H103K	CHIP C	0.010UF	K	
C306,307			CK73FB1H102K	CHIP C	1000PF	K	
C308			CK73FB1H103K	CHIP C	0.010UF	K	
C310			CK73FB1H103K	CHIP C	0.010UF	K	
C312			CE04EW1C100M	ELECTRO	10UF	16WV	
C313,314			CK73FB1H103K	CHIP C	0.010UF	K	
C315			CE04EW1C100M	ELECTRO	10UF	16WV	
C316-327			CK73FB1H102K	CHIP C	1000PF	K	
C328-331			CK73FB1E103K	CHIP C	0.010UF	K	
C332			CK73FB1H102K	CHIP C	1000PF	K	
C333			CK73FB1E103K	CHIP C	0.010UF	K	
C334			CC73FCH1H330J	CHIP C	33PF	J	
C335			CK73FB1E103K	CHIP C	0.010UF	K	
C338			CC73FSL1H221J	CHIP C	220PF	J	
C339,340			CC73FCH1H220J	CHIP C	22PF	J	
C341-346			CK73FB1E103K	CHIP C	0.010UF	K	
C347,348			CC73FCH1H100D	CHIP C	10PF	D	
C350			C92-0004-05	CHIP-TAN	1.0UF	16WV	
C500			CK73FB1E103K	CHIP C	0.010UF	K	
C501			CE04NW1C100M	ELECTRO	10UF	16WV	
C502			CK73FB1E103K	CHIP C	0.010UF	K	
C503			CE04NW1C100M	ELECTRO	10UF	16WV	
C504			CK73FB1E103K	CHIP C	0.010UF	K	
C505			CE04EW1C100M	ELECTRO	10UF	16WV	
C506			CK73FB1E103K	CHIP C	0.010UF	K	
C507			CE04NW1C100M	ELECTRO	10UF	16WV	
C508			CK73FB1E103K	CHIP C	0.010UF	K	
C509			CE04NW1C100M	ELECTRO	10UF	16WV	
C510			CK73FB1E103K	CHIP C	0.010UF	K	
C511			CE04EW1C100M	ELECTRO	10UF	16WV	
C512,513			CK73FB1E103K	CHIP C	0.010UF	K	
C514			C92-0516-05	CHIP-TAN	4.7UF	16WV	
C515			CC73FSL1H271J	CHIP C	270PF	J	
C516			CC73FSL1H561J	CHIP C	560PF	J	
C517			CK73FB1E103K	CHIP C	0.010UF	K	
C518			CC73FSL1H271J	CHIP C	270PF	J	
C519,520			CK73FB1E103K	CHIP C	0.010UF	K	

Ref. No.	Address	New parts	Parts No.	Description			Destination
C521			CE04EW1C100M	ELECTRO	10UF	16WV	
C522			CK73FB1E103K	CHIP C	0.010UF	K	
C523			CC73FCH1H121J	CHIP C	120PF	J	
C524			CC73FSL1H181J	CHIP C	180PF	J	
C525			CC73FCH1H121J	CHIP C	120PF	J	
C526-530			CK73FB1E103K	CHIP C	0.010UF	K	
C531			CC73FCH1H560J	CHIP C	56PF	J	
C532			CC73FSL1H391J	CHIP C	390PF	J	
C533			CC73FCH1H390J	CHIP C	39PF	J	
C534			CC73FCH1H680J	CHIP C	68PF	J	
C535			CC73FCH1H390J	CHIP C	39PF	J	
C536			CC73FCH1H101J	CHIP C	100PF	J	
C537			CC73FCH1H680J	CHIP C	68PF	J	
C538			CC73FCH1H390J	CHIP C	39PF	J	
C539			CC73FCH1H070D	CHIP C	7.0PF	D	
C540			CC73FCH1H680J	CHIP C	68PF	J	
C541			CC73FCH1H220J	CHIP C	22PF	J	
C542			CC73FCH1H330J	CHIP C	33PF	J	
C543-545			CK73FB1E103K	CHIP C	0.010UF	K	
C546			CC73FCH1H121J	CHIP C	120PF	J	
C547			CE04EW1C470M	ELECTRO	47UF	16WV	
C548-555			CK73FB1E103K	CHIP C	0.010UF	K	
C556			CK73FB1H102K	CHIP C	1000PF	K	
C557			CC73FCH1H330J	CHIP C	33PF	J	
C558			CC73FCH1H0R5C	CHIP C	0.5PF	C	
C560			CC73FCH1H0R5C	CHIP C	0.5PF	C	
C561			CC73FCH1H330J	CHIP C	33PF	J	
C562-564			CK73FB1E103K	CHIP C	0.010UF	K	
C565			C92-0516-05	CHIP-TAN	4.7UF	16WV	
C566,567			CC73FCH1H470J	CHIP C	47PF	J	
C568			CC73FCH1H101J	CHIP C	100PF	J	
C569			CE04EW1C100M	ELECTRO	10UF	16WV	
C570,571			CK73FB1E103K	CHIP C	0.010UF	K	
C572			CC73FCH1H100D	CHIP C	10PF	D	
C573			CC73FCH1H050C	CHIP C	5.0PF	C	
C574-576			CK73FB1E103K	CHIP C	0.010UF	K	
C577			CK73FB1H331K	CHIP C	330PF	K	
C578			CC73FCH1H620J	CHIP C	62PF	J	
C579			CK73FB1H331K	CHIP C	330PF	K	
C581			CC73FCH1H820J	CHIP C	82PF	J	
C583			CK73FB1H103K	CHIP C	0.010UF	K	
C584			CE04EW1C100M	ELECTRO	10UF	16WV	
C585			CK73FB1H103K	CHIP C	0.010UF	K	
C586			CK73FB1H682K	CHIP C	6800PF	K	
C587			CK73FB1H123K	CHIP C	0.012UF	K	
C588			CK73FB1H682K	CHIP C	6800PF	K	
C591			CK73FB1H103K	CHIP C	0.010UF	K	
C593			CK73FB1H102K	CHIP C	1000PF	K	
C594			CC73FSL1H221J	CHIP C	220PF	J	
C595			CK73FB1H103K	CHIP C	0.010UF	K	
C596			CC73FCH1H0R5C	CHIP C	0.5PF	C	
C597			CC73FCH1H270J	CHIP C	27PF	J	
C598-602			CK73FB1H103K	CHIP C	0.010UF	K	
C603			CK73FB1H102K	CHIP C	1000PF	K	
C604			CK73FB1H103K	CHIP C	0.010UF	K	
C606			CC73FCH1H270J	CHIP C	27PF	J	
C618			CE04EW1C101M	ELECTRO	100UF	16WV	
C619			C92-0001-05	CHIP-TAN	0.10UF	35WV	
C620-623			CK73FB1H102K	CHIP C	1000PF	K	

PARTS LIST

RF UNIT (X44-3210-00)

Ref. No.	Address	New parts	Parts No.	Description			Destination
C624			CK73FB1E103K	CHIP C	0.010UF	K	
C625-628			CK73FB1H102K	CHIP C	1000PF	K	
C629			CE04EW1C101M	ELECTRO	100UF	16WV	
C630,631			CK73FB1E103K	CHIP C	0.010UF	K	
C630,631			CK73FB1E103K	CHIP C	0.010UF	K	
C632			CE04EW1C101M	ELECTRO	100UF	16WV	
C633			CC73FCH1H101J	CHIP C	100PF	J	
C634			CC73FCH1H180J	CHIP C	18PF	J	
C635			CK73FB1H102K	CHIP C	1000PF	K	
C636			CC73FCH1H330J	CHIP C	33PF	J	
C637			CC73FCH1H080D	CHIP C	8.0PF	D	
C638			CC73FCH1H120J	CHIP C	12PF	J	
C639			CC73FCH1H560J	CHIP C	56PF	J	
C640			CK73FB1H183K	CHIP C	0.018UF	K	
C641			CC73FCH1H120J	CHIP C	12PF	J	
C642			CK73FB1H102K	CHIP C	1000PF	K	
C643			CC73FCH1H330J	CHIP C	33PF	J	
C644			CC73FCH1H120J	CHIP C	12PF	J	
C645			CC73FCH1H150J	CHIP C	15PF	J	
C646			CC73FCH1H390J	CHIP C	39PF	J	
C647			CC73FCH1H100D	CHIP C	10PF	D	
C648			CK73FB1H102K	CHIP C	1000PF	K	
C649			CC73FCH1H160J	CHIP C	16PF	J	
C650			CC73FCH1H240J	CHIP C	24PF	J	
C651			CC73FCH1H150J	CHIP C	15PF	J	
C652			CC73FCH1H390J	CHIP C	39PF	J	
C653			CK73FB1H183K	CHIP C	0.018UF	K	
C654			CC73FCH1H040C	CHIP C	4.0PF	C	
C655			CK73FB1H102K	CHIP C	1000PF	K	
C656			CC73FCH1H150J	CHIP C	15PF	J	
C657			CC73FCH1H200J	CHIP C	20PF	J	
C658			CC73FCH1H160J	CHIP C	16PF	J	
C659,660			CK73FB1H102K	CHIP C	1000PF	K	
C661			CC73FCH1H100D	CHIP C	10PF	D	
C662			CC73FCH1H030C	CHIP C	3.0PF	C	
C663			CC73FCH1H020C	CHIP C	2.0PF	C	
C664			CC73FCH1H040C	CHIP C	4.0PF	C	
C665,666			CK73FB1H102K	CHIP C	1000PF	K	
C667			CK73FB1E103K	CHIP C	0.010UF	K	
C668			CK73FB1H102K	CHIP C	1000PF	K	
C669			CK73FB1E103K	CHIP C	0.010UF	K	
C670			CK73FB1H102K	CHIP C	1000PF	K	
C671			CC73FCH1H240J	CHIP C	24PF	J	
C672			CK73FB1H102K	CHIP C	1000PF	K	
C673			CC73FCH1H010C	CHIP C	1.0PF	C	
C674			CC73FCH1H240J	CHIP C	24PF	J	
C675			CK73FB1E103K	CHIP C	0.010UF	K	
C676			C92-0004-05	CHIP-TAN	1.0UF	16WV	
C677			CE04EW1C221M	ELECTRO	220UF	16WV	
C678			CK73FB1E103K	CHIP C	0.010UF	K	
C679			CQ92M1H822K	MYLAR	8200PF	K	
C680			C91-1083-05	FILM	0.47UF	63WV	
C681			CK73FB1H102K	CHIP C	1000PF	K	
C682,683			CK73FB1E103K	CHIP C	0.010UF	K	
C684			CK73FB1H103K	CHIP C	0.010UF	K	
C685,686			CK73FB1E103K	CHIP C	0.010UF	K	
C687			CC73FCH1H020C	CHIP C	2.0PF	C	
C688			CC73FCH1H1R5C	CHIP C	1.5PF	C	
C689			CC73FCH1H030C	CHIP C	3.0PF	C	

Ref. No.	Address	New parts	Parts No.	Description			Destination
C690			CC73FCH1H470J	CHIP C	47PF	J	
C691			CC73FCH1H270J	CHIP C	27PF	J	
C692-696			CK73FB1E103K	CHIP C	0.010UF	K	
C697			CE04EW1C100M	ELECTRO	10UF	16WV	
C698			CK73FB1H102K	CHIP C	1000PF	K	
C699			CK73FB1E103K	CHIP C	0.010UF	K	
C700			CK73FB1H102K	CHIP C	1000PF	K	
C701			CC73FCH1H330J	CHIP C	33PF	J	
C702			CC73FCH1H100D	CHIP C	10PF	D	
C703			CC73FCH1H680J	CHIP C	68PF	J	
C704,705			CK73FB1H103K	CHIP C	0.010UF	K	
C706			CE04EW1C470M	ELECTRO	47UF	16WV	
C707			CK73FB1H103K	CHIP C	0.010UF	K	
C708			CE04EW1C101M	ELECTRO	100UF	16WV	
C710			CK73FB1H102K	CHIP C	1000PF	K	
C711			CQ92M1H333K	MYLAR	0.033UF	K	
C712			C91-1083-05	FILM	0.47UF	63WV	
C713			CK73FB1H103K	CHIP C	0.010UF	K	
C714			C92-0516-05	CHIP-TAN	4.7UF	16WV	
C715,716			CK73FB1H102K	CHIP C	1000PF	K	
C717			CE04EW1C101M	ELECTRO	100UF	16WV	
C719			CC73FCH1H020C	CHIP C	2.0PF	C	
C721-726			CC73FCH1H270J	CHIP C	27PF	J	
C727,728			CC73FCH1H100D	CHIP C	10PF	D	
C729			CC73FCH1H020C	CHIP C	2.0PF	C	
C730-732			CK73FB1H102K	CHIP C	1000PF	K	
C744			CK73FB1H102K	CHIP C	1000PF	K	
C750-757			CC73FCH1H101J	CHIP C	100PF	J	
C758-761			CK73FB1H102K	CHIP C	1000PF	K	
C762			CC73FCH1H101J	CHIP C	100PF	J	
C770			CE04EW1C470M	ELECTRO	47UF	16WV	
C771			CK73FB1H103K	CHIP C	0.010UF	K	
C780			CE04EW1E470M	ELECTRO	47UF	25WV	
C781,782			CK73FF1E104Z	CHIP C	0.10UF	Z	
C783			CE04EW1C470M	ELECTRO	47UF	16WV	
C784			CE04EW1E470M	ELECTRO	47UF	25WV	
C785,786			CK73FF1E104Z	CHIP C	0.10UF	Z	
C787			CE04EW1C470M	ELECTRO	47UF	16WV	
C800			CC73FCH1H390J	CHIP C	39PF	J	
C801			CC73FCH1H151J	CHIP C	150PF	J	
C802			CC73FCH1H390J	CHIP C	39PF	J	
C803			CC73FCH1H050C	CHIP C	5.0PF	C	
C804			CK73FB1H103K	CHIP C	0.010UF	K	
C805			CC73FCH1H020C	CHIP C	2.0PF	C	
C806,807			CK73FB1H103K	CHIP C	0.010UF	K	
C808			C92-0004-05	CHIP-TAN	1.0UF	16WV	
C907-912			CK73FB1H102K	CHIP C	1000PF	K	
C914-926			CK73FB1H102K	CHIP C	1000PF	K	
TC506,507			C05-0377-05	TRIMMER CAPACITOR		10PF	
TC508,509			C05-0376-05	TRIMMER CAPACITOR		6PF	
TC800			C05-0344-05	TRIMMER CAPACITOR		30PF	
CN2			E04-0154-05	RF COAXIAL CABLE SOCKET			
CN4			E04-0154-05	RF COAXIAL CABLE SOCKET			
CN5,6			E04-0191-05	RF COAXIAL CABLE SOCKET			
CN7			E40-3238-05	PIN CONNECTOR (3P)			
CN10			E04-0154-05	RF COAXIAL CABLE SOCKET			
CN13		*	E40-5741-05	PIN CONNECTOR (8P)			
CN14		*	E40-5740-05	PIN CONNECTOR (20P)			

PARTS LSIT

RF UNIT (X44-3210-00)

Ref. No.	Address	New parts	Parts No.	Description	Destination
CN15-17			E04-0154-05	RF COAXIAL CABLE SOCKET	
CN500		*	E40-5740-05	PIN CONNECTOR (20P)	
CN501			E40-3237-05	PIN CONNECTOR (2P)	
CN502-505			E04-0154-05	RF COAXIAL CABLE SOCKET (2P)	
CN506			E40-3238-05	PIN CONNECTOR (3P)	
CN508			E40-5606-05	PIN CONNECTOR (3P)	
CN509			E40-5607-05	PIN CONNECTOR (4P)	
CN510			E23-0996-05	TERMINAL (TEST)	
CN800			E40-4463-05	PIN CONNECTOR	
CN801			E40-4464-05	PIN CONNECTOR	
CN901			E40-3300-05	PIN CONNECTOR (3P)	
CN903-907		*	E40-5743-05	FLAT CABLE CONNECTOR (6P)	
J1			E06-0752-05	DIN SOCKET	
J2,3			E13-0166-05	PIN JACK	
J901		*	E11-0462-05	PHONE JACK	
W1		*	E37-0546-05	LEAD WIRE WITH CONNECTOR	
W2		*	E37-0517-05	LEAD WIRE WITH MINIPIN PLUG	
101	2F		F11-1141-04	SHIELDING COVER	
A502	2F		F11-1140-04	SHIELDING CASE	
–			J30-0545-05	SPACER (TO XF1)	
–			J30-0563-05	SPACER (TO XF3, X800)	
CF500,501			L72-0343-05	CERAMIC FILTER (8.4MHZ)	
L1		*	L39-1254-05	COIL	
L2			L19-0324-05	TROIDAL COIL	
L3			L40-1021-14	SMALL FIXED INDUCTOR	
L7			L40-2701-14	SMALL FIXED INDUCTOR	
L8			L40-4791-14	SMALL FIXED INDUCTOR	
L9			L40-2701-14	SMALL FIXED INDUCTOR	
L10			L40-1015-48	SMALL FIXED INDUCTOR (100UH)	
L11			L19-0324-05	TROIDAL COIL	
L12			L40-1005-48	SMALL FIXED INDUCTOR (10UH)	
L13			L40-4705-48	SMALL FIXED INDUCTOR (47UH)	
L14,15			L40-1501-14	SMALL FIXED INDUCTOR	
L16			L40-1021-14	SMALL FIXED INDUCTOR	
L17,18			L40-5691-14	SMALL FIXED INDUCTOR	
L19			L40-1292-14	SMALL FIXED INDUCTOR	
L20			L40-8291-14	SMALL FIXED INDUCTOR	
L21,22			L40-1292-14	SMALL FIXED INDUCTOR	
L23			L40-5691-14	SMALL FIXED INDUCTOR	
L24			L40-1292-14	SMALL FIXED INDUCTOR	
L25			L40-1092-14	SMALL FIXED INDUCTOR	
L26			L40-3391-14	SMALL FIXED INDUCTOR	
L27			L40-1092-14	SMALL FIXED INDUCTOR	
L28-31			L34-4262-05	COIL	
L32			L40-3382-14	SMALL FIXED INDUCTOR	
L33			L40-2792-14	SMALL FIXED INDUCTOR	
L34			L40-3382-14	SMALL FIXED INDUCTOR	
L35			L40-2282-14	SMALL FIXED INDUCTOR	
L36			L40-2292-14	SMALL FIXED INDUCTOR	
L37			L40-2282-14	SMALL FIXED INDUCTOR	
L38-40			L34-4289-05	COIL	
L41			L40-2282-14	SMALL FIXED INDUCTOR	
L42			L40-1292-14	SMALL FIXED INDUCTOR	
L43			L40-2282-14	SMALL FIXED INDUCTOR	
L44-46		*	L34-4392-05	COIL	
L47			L40-2282-14	SMALL FIXED INDUCTOR	
L48			L40-1292-14	SMALL FIXED INDUCTOR	

Ref. No.	Address	New parts	Parts No.	Description	Destination
L49			L40-2282-14	SMALL FIXED INDUCTOR	
L50			L34-4264-05	COIL	
L51			L40-1021-14	SMALL FIXED INDUCTOR	
L52			L34-4265-05	COIL	
L53			L19-0324-05	TROIDAL COIL	
L54			L40-4785-48	SMALL FIXED INDUCTOR (470NH)	
L55			L19-0324-05	TROIDAL COIL	
L56			L40-4705-48	SMALL FIXED INDUCTOR (47UH)	
L57			L40-2785-48	SMALL FIXED INDUCTOR (270NH)	
L58			L40-2285-48	SMALL FIXED INDUCTOR (220NH)	
L59			L19-0324-05	TROIDAL COIL	
L60			L39-1255-05	COIL	
L61			L40-1285-48	SMALL FIXED INDUCTOR (120NH)	
L62			L39-1255-05	COIL	
L63			L40-1015-48	SMALL FIXED INDUCTOR (100NH)	
L64			L39-1255-05	COIL	
L65			L34-4222-05	COIL	
L67		*	L34-4394-05	COIL	
L68			L40-1015-48	SMALL FIXED INDUCTOR (100UH)	
L69			L40-2285-48	SMALL FIXED INDUCTOR (220NH)	
L70		*	L34-4393-05	COIL	
L71			L40-3395-48	SMALL FIXED INDUCTOR (3.3UH)	
L72		*	L34-4394-05	COIL	
L73			L40-2295-48	SMALL FIXED INDUCTOR (2.2UH)	
L74			L40-2285-48	SMALL FIXED INDUCTOR (220NH)	
L75			L34-4209-05	COIL	
L76			L40-3395-48	SMALL FIXED INDUCTOR (3.3UH)	
L77			L34-0943-05	COIL	
L78			L40-4785-48	SMALL FIXED INDUCTOR (470NH)	
L79			L40-3395-48	SMALL FIXED INDUCTOR (3.3UH)	
L81			L34-0535-05	COIL	
L82			L34-0536-05	COIL	
L83,84			L40-1015-48	SMALL FIXED INDUCTOR (100UH)	
L86			L40-2285-48	SMALL FIXED INDUCTOR (220NH)	
L87			L40-4705-48	SMALL FIXED INDUCTOR (47UH)	
L88			L19-0324-05	TROIDAL COIL	
L89		*	L34-4395-05	COIL	
L90			L39-1255-05	COIL	
L91		*	L34-4395-05	COIL	
L92			L34-4211-05	COIL	
L93			L40-1015-48	SMALL FIXED INDUCTOR (100UH)	
L94		*	L34-4395-05	COIL	
L95			L34-4207-05	COIL	
L98			L34-0943-05	COIL	
L99			L34-0781-05	COIL	
L100			L34-0536-05	COIL	
L101			L40-4705-48	SMALL FIXED INDUCTOR (47UH)	
L102			L40-3395-48	SMALL FIXED INDUCTOR (3.3UH)	
L107			L40-1015-48	SMALL FIXED INDUCTOR (100UH)	
L108			L40-1005-48	SMALL FIXED INDUCTOR (10UH)	
L110,111		*	L40-1805-48	SMALL FIXED INDUCTOR (18UH)	
L112,113		*	L40-1081-42	SMALL FIXED INDUCTOR (0.1UH)	
L301		*	L40-1001-42	SMALL FIXED INDUCTOR (10UH)	
L304-310		*	L40-1001-42	SMALL FIXED INDUCTOR (10UH)	
L314-318		*	L40-1001-42	SMALL FIXED INDUCTOR (10UH)	
L500-505			L40-1005-48	SMALL FIXED INDUCTOR (10UH)	
L506,507		*	L40-6805-48	SMALL FIXED INDUCTOR (68UH)	
L508			L40-1005-48	SMALL FIXED INDUCTOR (10UH)	
L509,510		*	L40-2705-48	SMALL FIXED INDUCTOR (27UH)	

PARTS LIST

RF UNIT (X44-3210-00)

Ref. No.	Address	New parts	Parts No.	Description	Destination
L511		*	L40-1805-48	SMALL FIXED INDUCTOR (18UH)	
L512,513		*	L40-2705-48	SMALL FIXED INDUCTOR (27UH)	
L514			L40-2205-48	SMALL FIXED INDUCTOR (22UH)	
L515		*	L40-1805-48	SMALL FIXED INDUCTOR (18UH)	
L516			L40-5695-48	SMALL FIXED INDUCTOR (5.6UH)	
L517			L40-1005-48	SMALL FIXED INDUCTOR (10UH)	
L518			L34-4222-05	COIL	
L519		*	L34-4421-05	COIL	
L520			L34-4222-05	COIL	
L521,522			L40-2285-48	SMALL FIXED INDUCTOR (220NH)	
L523			L40-1005-48	SMALL FIXED INDUCTOR (10UH)	
L524			L40-1095-48	SMALL FIXED INDUCTOR (1UH)	
L525,526			L40-2205-48	SMALL FIXED INDUCTOR (22UH)	
L528		*	L34-4396-05	COIL	
L529,530			L34-4222-05	COIL	
L531-534			L40-1015-48	SMALL FIXED INDUCTOR (100UH)	
L535			L33-0664-05	CHOKE COIL	
L536			L34-2354-05	COIL	
L537			L40-4795-48	SMALL FIXED INDUCTOR (4.7UH)	
L538			L33-0664-05	CHOKE COIL	
L539			L34-2354-05	COIL	
L540			L40-4795-48	SMALL FIXED INDUCTOR (4.7UH)	
L541			L33-0664-05	CHOKE COIL	
L542			L34-2354-05	COIL	
L543			L40-4795-48	SMALL FIXED INDUCTOR (4.7UH)	
L544			L33-0664-05	CHOKE COIL	
L545			L34-2354-05	COIL	
L546			L40-4795-48	SMALL FIXED INDUCTOR (4.7UH)	
L547			L40-3385-48	SMALL FIXED INDUCTOR (330NH)	
L548			L40-1295-48	SMALL FIXED INDUCTOR (1.2UH)	
L549			L40-3385-48	SMALL FIXED INDUCTOR (330NH)	
L550			L40-2285-48	SMALL FIXED INDUCTOR (220NH)	
L551			L40-1015-48	SMALL FIXED INDUCTOR (100NH)	
L552		*	L40-2795-48	SMALL FIXED INDUCTOR (2.7UH)	
L553			L40-1595-48	SMALL FIXED INDUCTOR (1.5UH)	
L554			L40-2295-48	SMALL FIXED INDUCTOR (2.2UH)	
L555			L40-3395-48	SMALL FIXED INDUCTOR (3.3UH)	
L556			L40-2285-48	SMALL FIXED INDUCTOR (220NH)	
L557-559			L40-1015-48	SMALL FIXED INDUCTOR (100UH)	
L580,581			L40-1005-48	SMALL FIXED INDUCTOR (10UH)	
L601			L40-3395-48	SMALL FIXED INDUCTOR (3.3UH)	
L603			L40-2785-48	SMALL FIXED INDUCTOR (270NH)	
L604			L40-1015-48	SMALL FIXED INDUCTOR (100UH)	
X800			L77-1521-15	CRYSTAL RESONATOR (20MHZ)	
XF1			L71-0401-05	CRYSTAL FILTER (73.05MHZ)	
XF2			L71-0235-05	CRYSTAL FILTER	
XF3	—		L71-0266-05	CRYSTAL FILTER (8830KHZ)	
Q	2F		N38-2640-46	PAN HEAD MACHINE SCREW	
CP500-505			R90-0721-05	MULTI-COMP 4.7K X 16	
R1			RD14BB2E470J	RD 47 J 1/4W	
R2			RD14BB2E151J	RD 150 J 1/4W	
R3			RK73FB2A101J	CHIP R 100 J 1/10W	
R5			RD14BB2E101J	RD 100 J 1/4W	
R7			RD14BB2E820J	RD 82 J 1/4W	
R9			RK73FB2A221J	CHIP R 220 J 1/10W	
R10			RK73FB2A181J	CHIP R 180 J 1/10W	
R11,12			RK73FB2A331J	CHIP R 330 J 1/10W	
R13			RK73FB2A470J	CHIP R 47 J 1/10W	

Ref. No.	Address	New parts	Parts No.	Description	Destination
R14			RK73FB2A222J	CHIP R 2.2K J 1/10W	
R18			RK73FB2A103J	CHIP R 10K J 1/10W	
R19			RK73FB2A330J	CHIP R 33 J 1/10W	
R20			RK73FB2A102J	CHIP R 1.0K J 1/10W	
R21,22			RK73FB2A330J	CHIP R 33 J 1/10W	
R23			RK73FB2A101J	CHIP R 100 J 1/10W	
R24			RK73FB2A222J	CHIP R 2.2K J 1/10W	
R25			RK73FB2A561J	CHIP R 560 J 1/10W	
R27			RK73FB2A181J	CHIP R 180 J 1/10W	
R28			RK73FB2A680J	CHIP R 68 J 1/10W	
R31			RK73FB2A103J	CHIP R 10K J 1/10W	
R44-55			RK73FB2A223J	CHIP R 22K J 1/10W	
R56			RK73FB2A121J	CHIP R 120 J 1/10W	
R58			RK73FB2A680J	CHIP R 68 J 1/10W	
R59,60			RK73FB2A560J	CHIP R 56 J 1/10W	
R61			RK73FB2A680J	CHIP R 68 J 1/10W	
R62			RK73FB2A220J	CHIP R 22 J 1/10W	
R63			RK73FB2A121J	CHIP R 120 J 1/10W	
R65			RK73FB2A220J	CHIP R 22 J 1/10W	
R66			RK73FB2A121J	CHIP R 120 J 1/10W	
R68			RK73FB2A220J	CHIP R 22 J 1/10W	
R69			RK73FB2A121J	CHIP R 120 J 1/10W	
R71			RK73FB2A220J	CHIP R 22 J 1/10W	
R72			RK73FB2A121J	CHIP R 120 J 1/10W	
R74			RK73FB2A220J	CHIP R 22 J 1/10W	
R75			RK73FB2A121J	CHIP R 120 J 1/10W	
R77			RK73FB2A220J	CHIP R 22 J 1/10W	
R78			RK73FB2A121J	CHIP R 120 J 1/10W	
R80			RK73FB2A220J	CHIP R 22 J 1/10W	
R81			RK73FB2A121J	CHIP R 120 J 1/10W	
R83			RK73FB2A220J	CHIP R 22 J 1/10W	
R84			RK73FB2A121J	CHIP R 120 J 1/10W	
R86			RK73FB2A220J	CHIP R 22 J 1/10W	
R87			RK73FB2A121J	CHIP R 120 J 1/10W	
R89			RK73FB2A220J	CHIP R 22 J 1/10W	
R90			RK73FB2A121J	CHIP R 120 J 1/10W	
R92			RK73FB2A151J	CHIP R 150 J 1/10W	
R93			RK73FB2A223J	CHIP R 22K J 1/10W	
R94			RK73FB2A104J	CHIP R 100K J 1/10W	
R95			RK73FB2A393J	CHIP R 39K J 1/10W	
R96,97			RK73FB2A330J	CHIP R 33 J 1/10W	
R98			RK73FB2A473J	CHIP R 47K J 1/10W	
R99			RK73FB2A151J	CHIP R 150 J 1/10W	
R100			RK73FB2A331J	CHIP R 330 J 1/10W	
R101			RK73FB2A221J	CHIP R 220 J 1/10W	
R102			RK73FB2A101J	CHIP R 100 J 1/10W	
R103			RK73FB2A473J	CHIP R 47K J 1/10W	
R104,105			RK73FB2A151J	CHIP R 150 J 1/10W	
R106			RK73FB2A152J	CHIP R 1.5K J 1/10W	
R107			RK73FB2A680J	CHIP R 68 J 1/10W	
R108			RK73FB2A220J	CHIP R 22 J 1/10W	
R109			RK73FB2A100J	CHIP R 10 J 1/10W	
R110			RK73FB2A151J	CHIP R 150 J 1/10W	
R111			RK73FB2A471J	CHIP R 470 J 1/10W	
R112			RK73FB2A102J	CHIP R 1.0K J 1/10W	
R113			RK73FB2A471J	CHIP R 470 J 1/10W	
R114			RK73FB2A562J	CHIP R 5.6K J 1/10W	
R115			RK73FB2A220J	CHIP R 22 J 1/10W	
R116			RK73FB2A150J	CHIP R 15 J 1/10W	

PARTS LSIT

RF UNIT (X44-3210-00)

Ref. No.	Address	New parts	Parts No.	Description			Destination
R117			RK73FB2A471J	CHIP R	470	J 1/10W	
R118			RK73FB2A680J	CHIP R	68	J 1/10W	
R119,120			RK73FB2A331J	CHIP R	330	J 1/10W	
R121			RK73FB2A102J	CHIP R	1.0K	J 1/10W	
R122,123			RK73FB2A100J	CHIP R	10	J 1/10W	
R124			RK73FB2A471J	CHIP R	470	J 1/10W	
R125,126			RK73FB2A100J	CHIP R	10	J 1/10W	
R127			RK73FB2A180J	CHIP R	18	J 1/10W	
R128			RK73FB2A331J	CHIP R	330	J 1/10W	
R130			RK73FB2A331J	CHIP R	330	J 1/10W	
R131			RK73FB2A101J	CHIP R	100	J 1/10W	
R132			RK73FB2A223J	CHIP R	22K	J 1/10W	
R133			RK73FB2A333J	CHIP R	33K	J 1/10W	
R134			RK73FB2A122J	CHIP R	1.2K	J 1/10W	
R139			RK73FB2A104J	CHIP R	100K	J 1/10W	
R140			RK73FB2A473J	CHIP R	47K	J 1/10W	
R142			RK73FB2A473J	CHIP R	47K	J 1/10W	
R143			RK73FB2A471J	CHIP R	470	J 1/10W	
R144			RK73FB2A221J	CHIP R	220	J 1/10W	
R145			RK73FB2A330J	CHIP R	33	J 1/10W	
R146			RK73FB2A471J	CHIP R	470	J 1/10W	
R147			RK73FB2A562J	CHIP R	5.6K	J 1/10W	
R148			RK73FB2A223J	CHIP R	22K	J 1/10W	
R150			RK73FB2A181J	CHIP R	180	J 1/10W	
R154			RK73FB2A471J	CHIP R	470	J 1/10W	
R156			RK73FB2A330J	CHIP R	33	J 1/10W	
R157			RK73FB2A182J	CHIP R	1.8K	J 1/10W	
R158			RK73FB2A330J	CHIP R	33	J 1/10W	
R159			RK73FB2A101J	CHIP R	100	J 1/10W	
R160,161			RK73FB2A222J	CHIP R	2.2K	J 1/10W	
R162			RK73FB2A101J	CHIP R	100	J 1/10W	
R163			RK73FB2A332J	CHIP R	3.3K	J 1/10W	
R164			RK73FB2A152J	CHIP R	1.5K	J 1/10W	
R165			RK73FB2A473J	CHIP R	47K	J 1/10W	
R166			RK73FB2A222J	CHIP R	2.2K	J 1/10W	
R167			RK73FB2A101J	CHIP R	100	J 1/10W	
R168			RK73FB2A393J	CHIP R	39K	J 1/10W	
R169			RK73FB2A102J	CHIP R	1.0K	J 1/10W	
R170			RK73FB2A223J	CHIP R	22K	J 1/10W	
R171,172			RK73FB2A101J	CHIP R	100	J 1/10W	
R173			RK73FB2A393J	CHIP R	39K	J 1/10W	
R174			RK73FB2A223J	CHIP R	22K	J 1/10W	
R175			RK73FB2A102J	CHIP R	1.0K	J 1/10W	
R176			RK73FB2A103J	CHIP R	10K	J 1/10W	
R177			RK73FB2A153J	CHIP R	15K	J 1/10W	
R178			RK73FB2A563J	CHIP R	56K	J 1/10W	
R179			RK73FB2A103J	CHIP R	10K	J 1/10W	
R180			RK73FB2A104J	CHIP R	100K	J 1/10W	
R181			RK73FB2A222J	CHIP R	2.2K	J 1/10W	
R182			RK73FB2A103J	CHIP R	10K	J 1/10W	
R183			RK73FB2A470J	CHIP R	47	J 1/10W	
R184			RK73FB2A121J	CHIP R	120	J 1/10W	
R185			RK73FB2A103J	CHIP R	10K	J 1/10W	
R186			RK73FB2A562J	CHIP R	5.6K	J 1/10W	
R188			RK73FB2A470J	CHIP R	47	J 1/10W	
R189			RK73FB2A152J	CHIP R	1.5K	J 1/10W	
R190			RK73FB2A103J	CHIP R	10K	J 1/10W	
R191			RK73FB2A151J	CHIP R	150	J 1/10W	
R192			RK73FB2A102J	CHIP R	1.0K	J 1/10W	

Ref. No.	Address	New parts	Parts No.	Description			Destination
R195,196			RK73FB2A330J	CHIP R	33	J 1/10W	
R197			RK73FB2A273J	CHIP R	27K	J 1/10W	
R198			RK73FB2A103J	CHIP R	10K	J 1/10W	
R199,200			RK73FB2A221J	CHIP R	220	J 1/10W	
R201			RK73FB2A473J	CHIP R	47K	J 1/10W	
R202,203			RK73FB2A680J	CHIP R	68	J 1/10W	
R204			RK73FB2A101J	CHIP R	100	J 1/10W	
R205,206			RK73FB2A471J	CHIP R	470	J 1/10W	
R207,208			RK73FB2A330J	CHIP R	33	J 1/10W	
R209			RK73FB2A471J	CHIP R	470	J 1/10W	
R210			RK73FB2A102J	CHIP R	1.0K	J 1/10W	
R211			RK73FB2A472J	CHIP R	4.7K	J 1/10W	
R212,213			RK73FB2A330J	CHIP R	33	J 1/10W	
R214			RK73FB2A103J	CHIP R	10K	J 1/10W	
R215			RK73FB2A823J	CHIP R	82K	J 1/10W	
R216			RK73FB2A681J	CHIP R	680	J 1/10W	
R217			RK73FB2A151J	CHIP R	150	J 1/10W	
R218			RK73FB2A332J	CHIP R	3.3K	J 1/10W	
R219			RK73FB2A103J	CHIP R	10K	J 1/10W	
R220			RK73FB2A101J	CHIP R	100	J 1/10W	
R221			RK73FB2A102J	CHIP R	1.0K	J 1/10W	
R222			RK73FB2A103J	CHIP R	10K	J 1/10W	
R223			RK73FB2A392J	CHIP R	3.9K	J 1/10W	
R224			RK73FB2A332J	CHIP R	3.3K	J 1/10W	
R225			RK73FB2A223J	CHIP R	22K	J 1/10W	
R226			RK73FB2A562J	CHIP R	5.6K	J 1/10W	
R229			RK73FB2A103J	CHIP R	10K	J 1/10W	
R230			RK73FB2A152J	CHIP R	1.5K	J 1/10W	
R231,232			RK73FB2A221J	CHIP R	220	J 1/10W	
R233			RK73FB2A152J	CHIP R	1.5K	J 1/10W	
R234			RK73FB2A101J	CHIP R	100	J 1/10W	
R235			RK73FB2A152J	CHIP R	1.5K	J 1/10W	
R236,237			RK73FB2A101J	CHIP R	100	J 1/10W	
R238			RK73FB2A152J	CHIP R	1.5K	J 1/10W	
R239			RK73FB2A101J	CHIP R	100	J 1/10W	
R240			RK73FB2A152J	CHIP R	1.5K	J 1/10W	
R241,242			RK73FB2A331J	CHIP R	330	J 1/10W	
R243			RK73FB2A152J	CHIP R	1.5K	J 1/10W	
R244			RK73FB2A101J	CHIP R	100	J 1/10W	
R245			RK73FB2A152J	CHIP R	1.5K	J 1/10W	
R246			RK73FB2A221J	CHIP R	220	J 1/10W	
R248			RK73FB2A822J	CHIP R	8.2K	J 1/10W	
R249			RK73FB2A222J	CHIP R	2.2K	J 1/10W	
R250			RK73FB2A103J	CHIP R	10K	J 1/10W	
R251			RK73FB2A153J	CHIP R	15K	J 1/10W	
R252			RK73FB2A102J	CHIP R	1.0K	J 1/10W	
R253			RK73FB2A472J	CHIP R	4.7K	J 1/10W	
R256			RK73FB2A472J	CHIP R	4.7K	J 1/10W	
R257			RK73FB2A101J	CHIP R	100	J 1/10W	
R258			RK73FB2A331J	CHIP R	330	J 1/10W	
R259			RK73FB2A104J	CHIP R	100K	J 1/10W	
R260			RK73FB2A102J	CHIP R	1.0K	J 1/10W	
R261			RK73FB2A331J	CHIP R	330	J 1/10W	
R262			RK73FB2A102J	CHIP R	1.0K	J 1/10W	
R263			RK73FB2A332J	CHIP R	3.3K	J 1/10W	
R264			RK73FB2A222J	CHIP R	2.2K	J 1/10W	
R265			RK73FB2A272J	CHIP R	2.7K	J 1/10W	
R266			RK73FB2A332J	CHIP R	3.3K	J 1/10W	
R267			RK73FB2A822J	CHIP R	8.2K	J 1/10W	

PARTS LIST

RF UNIT (X44-3210-00)

Ref. No.	Address	New parts	Parts No.	Description			Destination
R268			RK73FB2A273J	CHIP R	27K	J 1/10W	
R269			RK73FB2A103J	CHIP R	10K	J 1/10W	
R271			RK73FB2A224J	CHIP R	220K	J 1/10W	
R272			RK73FB2A104J	CHIP R	100K	J 1/10W	
R276			RK73FB2A474J	CHIP R	470K	J 1/10W	
R277			RK73FB2A103J	CHIP R	10K	J 1/10W	
R278			RK73FB2A224J	CHIP R	220K	J 1/10W	
R279			RK73FB2A473J	CHIP R	47K	J 1/10W	
R280			RK73FB2A223J	CHIP R	22K	J 1/10W	
R281			RK73FB2A222J	CHIP R	2.2K	J 1/10W	
R284			RK73FB2A224J	CHIP R	220K	J 1/10W	
R285			RK73FB2A103J	CHIP R	10K	J 1/10W	
R286			RK73FB2A101J	CHIP R	100	J 1/10W	
R287			RK73FB2A103J	CHIP R	10K	J 1/10W	
R288			RK73FB2A472J	CHIP R	4.7K	J 1/10W	
R289			RK73FB2A103J	CHIP R	10K	J 1/10W	
R290,291			RK73FB2A472J	CHIP R	4.7K	J 1/10W	
R292,293			RK73FB2A681J	CHIP R	680	J 1/10W	
R294-297			RK73FB2A224J	CHIP R	220K	J 1/10W	
R298			RK73FB2A472J	CHIP R	4.7K	J 1/10W	
R320			RK73FB2A472J	CHIP R	4.7K	J 1/10W	
R322,323			RK73FB2A223J	CHIP R	22K	J 1/10W	
R324			RK73FB2A101J	CHIP R	100	J 1/10W	
R325			RK73FB2A102J	CHIP R	1.0K	J 1/10W	
R329			RK73FB2A224J	CHIP R	220K	J 1/10W	
R330			RK73FB2A104J	CHIP R	100K	J 1/10W	
R331			RK73FB2A684J	CHIP R	680K	J 1/10W	
R332			RK73FB2A103J	CHIP R	10K	J 1/10W	
R333			RK73FB2A680J	CHIP R	68	J 1/10W	
R334			RK73FB2A391J	CHIP R	390	J 1/10W	
R335			RK73FB2A272J	CHIP R	2.7K	J 1/10W	
R336,337			RK73FB2A104J	CHIP R	100K	J 1/10W	
R338			RK73FB2A154J	CHIP R	150K	J 1/10W	
R339			RK73FB2A224J	CHIP R	220K	J 1/10W	
R340			RK73FB2A101J	CHIP R	100	J 1/10W	
R351-362			RK73FB2A103J	CHIP R	10K	J 1/10W	
R363			R92-0670-05	CHIP R	0 OHM		
R380			RK73FB2A682J	CHIP R	6.8K	J 1/10W	
R381			RK73FB2A183J	CHIP R	18K	J 1/10W	
R382			RK73FB2A181J	CHIP R	180	J 1/10W	
R383-385			R92-0670-05	CHIP R	0 OHM		
R386			RK73FB2A330J	CHIP R	33	J 1/10W	
R500			RK73FB2A103J	CHIP R	10K	J 1/10W	
R501			RK73FB2A470J	CHIP R	47	J 1/10W	
R502			RK73FB2A331J	CHIP R	330	J 1/10W	
R503			RK73FB2A472J	CHIP R	4.7K	J 1/10W	
R504			RK73FB2A681J	CHIP R	680	J 1/10W	
R505			RK73FB2A561J	CHIP R	560	J 1/10W	
R506			RK73FB2A333J	CHIP R	33K	J 1/10W	
R507			RK73FB2A101J	CHIP R	100	J 1/10W	
R508			RK73FB2A272J	CHIP R	2.7K	J 1/10W	
R509			RK73FB2A681J	CHIP R	680	J 1/10W	
R510			RK73FB2A470J	CHIP R	47	J 1/10W	
R511			RK73FB2A122J	CHIP R	1.2K	J 1/10W	
R512			RK73FB2A472J	CHIP R	4.7K	J 1/10W	
R513			RK73FB2A103J	CHIP R	10K	J 1/10W	
R514			RK73FB2A220J	CHIP R	22	J 1/10W	
R515			RK73FB2A331J	CHIP R	330	J 1/10W	
R516			RK73FB2A560J	CHIP R	56	J 1/10W	

Ref. No.	Address	New parts	Parts No.	Description			Destination
R517-519			RK73FB2A470J	CHIP R	47	J 1/10W	
R520			RK73FB2A101J	CHIP R	100	J 1/10W	
R521			RK73FB2A223J	CHIP R	22K	J 1/10W	
R522			RK73FB2A331J	CHIP R	330	J 1/10W	
R523			RK73FB2A470J	CHIP R	47	J 1/10W	
R524,525			RK73FB2A102J	CHIP R	1.0K	J 1/10W	
R526			RK73FB2A331J	CHIP R	330	J 1/10W	
R527			RK73FB2A680J	CHIP R	68	J 1/10W	
R528			RK73FB2A391J	CHIP R	390	J 1/10W	
R529			RK73FB2A680J	CHIP R	68	J 1/10W	
R530			RK73FB2A103J	CHIP R	10K	J 1/10W	
R531			RK73FB2A222J	CHIP R	2.2K	J 1/10W	
R532			RK73FB2A151J	CHIP R	150	J 1/10W	
R533			RK73FB2A680J	CHIP R	68	J 1/10W	
R534			RK73FB2A101J	CHIP R	100	J 1/10W	
R535			RK73FB2A471J	CHIP R	470	J 1/10W	
R536			RK73FB2A470J	CHIP R	47	J 1/10W	
R537			RK73FB2A220J	CHIP R	22	J 1/10W	
R545			RK73FB2A103J	CHIP R	10K	J 1/10W	
R546			RK73FB2A821J	CHIP R	820	J 1/10W	
R547			RK73FB2A331J	CHIP R	330	J 1/10W	
R548,549			RK73FB2A470J	CHIP R	47	J 1/10W	
R550			RK73FB2A181J	CHIP R	180	J 1/10W	
R551			RK73FB2A221J	CHIP R	220	J 1/10W	
R552			RK73FB2A101J	CHIP R	100	J 1/10W	
R553			RK73FB2A333J	CHIP R	33K	J 1/10W	
R554			RK73FB2A682J	CHIP R	6.8K	J 1/10W	
R555,556			RK73FB2A101J	CHIP R	100	J 1/10W	
R557			RK73FB2A221J	CHIP R	220	J 1/10W	
R558			RK73FB2A101J	CHIP R	100	J 1/10W	
R559,560			RK73FB2A473J	CHIP R	47K	J 1/10W	
R561,562			RK73FB2A101J	CHIP R	100	J 1/10W	
R563			RK73FB2A102J	CHIP R	1.0K	J 1/10W	
R564			RK73FB2A681J	CHIP R	680	J 1/10W	
R565			RK73FB2A101J	CHIP R	100	J 1/10W	
R566			RK73FB2A471J	CHIP R	470	J 1/10W	
R567			RK73FB2A221J	CHIP R	220	J 1/10W	
R570,571			RK73FB2A222J	CHIP R	2.2K	J 1/10W	
R572			RK73FB2A272J	CHIP R	2.7K	J 1/10W	
R580-583			RK73FB2A223J	CHIP R	22K	J 1/10W	
R584			RK73FB2A101J	CHIP R	100	J 1/10W	
R586			RK73FB2A682J	CHIP R	6.8K	J 1/10W	
R587			RK73FB2A473J	CHIP R	47K	J 1/10W	
R588,589			RK73FB2A101J	CHIP R	100	J 1/10W	
R591			RK73FB2A682J	CHIP R	6.8K	J 1/10W	
R592			RK73FB2A473J	CHIP R	47K	J 1/10W	
R593,594			RK73FB2A101J	CHIP R	100	J 1/10W	
R596			RK73FB2A682J	CHIP R	6.8K	J 1/10W	
R597			RK73FB2A473J	CHIP R	47K	J 1/10W	
R598,599			RK73FB2A101J	CHIP R	100	J 1/10W	
R601			RK73FB2A682J	CHIP R	6.8K	J 1/10W	
R602			RK73FB2A473J	CHIP R	47K	J 1/10W	
R603			RK73FB2A101J	CHIP R	100	J 1/10W	
R604			RK73FB2A470J	CHIP R	47	J 1/10W	
R605			RK73FB2A392J	CHIP R	3.9K	J 1/10W	
R606			RK73FB2A103J	CHIP R	10K	J 1/10W	
R608			RK73FB2A471J	CHIP R	470	J 1/10W	
R609,610			RK73FB2A103J	CHIP R	10K	J 1/10W	
R611			RK73FB2A102J	CHIP R	1.0K	J 1/10W	

PARTS LSIT

RF UNIT (X44-3210-00)

Ref. No.	Address	New parts	Parts No.	Description	Destination
R612			RK73FB2A821J	CHIP R 820 J 1/10W	
R613			RK73FB2A271J	CHIP R 270 J 1/10W	
R614			RK73FB2A101J	CHIP R 100 J 1/10W	
R615			RK73FB2A220J	CHIP R 22 J 1/10W	
R616			RK73FB2A470J	CHIP R 47 J 1/10W	
R617			RK73FB2A392J	CHIP R 3.9K J 1/10W	
R618			RK73FB2A103J	CHIP R 10K J 1/10W	
R619			RK73FB2A220J	CHIP R 22 J 1/10W	
R620			RK73FB2A471J	CHIP R 470 J 1/10W	
R621			RK73FB2A183J	CHIP R 18K J 1/10W	
R622			RK73FB2A122J	CHIP R 1.2K J 1/10W	
R623			RK73FB2A102J	CHIP R 1.0K J 1/10W	
R624			RK73FB2A334J	CHIP R 330K J 1/10W	
R625			RK73FB2A182J	CHIP R 1.8K J 1/10W	
R626			RK73FB2A331J	CHIP R 330 J 1/10W	
R627			RK73FB2A102J	CHIP R 1.0K J 1/10W	
R628			RK73FB2A101J	CHIP R 100 J 1/10W	
R629			RK73FB2A821J	CHIP R 820 J 1/10W	
R630			RK73FB2A822J	CHIP R 8.2K J 1/10W	
R631			RK73FB2A103J	CHIP R 10K J 1/10W	
R632			RK73FB2A102J	CHIP R 1.0K J 1/10W	
R633			RK73FB2A181J	CHIP R 180 J 1/10W	
R634			RK73FB2A331J	CHIP R 330 J 1/10W	
R635			RK73FB2A823J	CHIP R 82K J 1/10W	
R636			RK73FB2A333J	CHIP R 33K J 1/10W	
R637			RK73FB2A101J	CHIP R 100 J 1/10W	
R638			RK73FB2A470J	CHIP R 47 J 1/10W	
R639			RK73FB2A682J	CHIP R 6.8K J 1/10W	
R640			RK73FB2A102J	CHIP R 1.0K J 1/10W	
R641			RK73FB2A151J	CHIP R 150 J 1/10W	
R642			RK73FB2A150J	CHIP R 15 J 1/10W	
R643			RK73FB2A471J	CHIP R 470 J 1/10W	
R644			RK73FB2A103J	CHIP R 10K J 1/10W	
R645			RK73FB2A392J	CHIP R 3.9K J 1/10W	
R646			RK73FB2A822J	CHIP R 8.2K J 1/10W	
R647			RK73FB2A102J	CHIP R 1.0K J 1/10W	
R648			RK73FB2A684J	CHIP R 680K J 1/10W	
R649			RK73FB2A182J	CHIP R 1.8K J 1/10W	
R650			RK73FB2A103J	CHIP R 10K J 1/10W	
R651			RK73FB2A472J	CHIP R 4.7K J 1/10W	
R652			RK73FB2A103J	CHIP R 10K J 1/10W	
R653			RK73FB2A104J	CHIP R 100K J 1/10W	
R655-656			RK73FB2A103J	CHIP R 10K J 1/10W	
R657			RK73FB2A471J	CHIP R 470 J 1/10W	
R658			RK73FB2A101J	CHIP R 100 J 1/10W	
R659			RK73FB2A470J	CHIP R 47 J 1/10W	
R690-697			RK73FB2A221J	CHIP R 220 J 1/10W	
R699			RK73FB2A102J	CHIP R 1.0K J 1/10W	
R710-712			RK73FB2A103J	CHIP R 10K J 1/10W	
R800			RK73FB2A223J	CHIP R 22K J 1/10W	
R801			RK73FB2A103J	CHIP R 10K J 1/10W	
R802			RK73FB2A222J	CHIP R 2.2K J 1/10W	
R803			RK73FB2A271J	CHIP R 270 J 1/10W	
R804			RK73FB2A101J	CHIP R 100 J 1/10W	
R901-902			RK73FB2A101J	CHIP R 100 J 1/10W	
R903-906			RK73FB2A101J	CHIP R 100 J 1/10W	
R908-920			RK73FB2A101J	CHIP R 100 J 1/10W	
R925-928			RK73EB2B221J	CHIP R 220 J 1/8W	
VR2			R12-6417-05	TRIMMING POT. 1K	

Ref. No.	Address	New parts	Parts No.	Description	Destination
VR3			R12-6427-05	TRIMMING POT. 47K	
VR901-904		*	R31-0605-05	VARIABLE RESISTOR 100K	
VR905,906		*	R31-0606-05	VARIABLE RESISTOR 10K	
K1-3			S51-1428-05	RELAY	
K4			S51-1420-05	RELAY	
S800			S31-2420-05	SLIDE SWITCH	
D1-3			LFB01	DIODE	
D4-7			RLS245	DIODE	
D8			1SV128	DIODE	
D10			LFB01	DIODE	
D11			1SV128	DIODE	
D12			RLS135	DIODE	
D13			1SV128	DIODE	
D14			RLS135	DIODE	
D15			1SV128	DIODE	
D16			RLS135	DIODE	
D17			1SV128	DIODE	
D18			RLS135	DIODE	
D19			1SV128	DIODE	
D20			RLS135	DIODE	
D21			1SV128	DIODE	
D22			RLS135	DIODE	
D23			1SV128	DIODE	
D24			RLS135	DIODE	
D25			1SV128	DIODE	
D26			RLS135	DIODE	
D27			1SV128	DIODE	
D28			RLS135	DIODE	
D29			1SV128	DIODE	
D30			RLS135	DIODE	
D31			1SV128	DIODE	
D32			RLS135	DIODE	
D33			1SV128	DIODE	
D35			RLS135	DIODE	
D36			1SV128	DIODE	
D37			RLS135	DIODE	
D38,39			1SV128	DIODE	
D40			RLS135	DIODE	
D41			1SV128	DIODE	
D42,43			DAN235K	DIODE	
D46			HSM88ASR	DIODE	
D47			LFB01	DIODE	
D49			1SV172	DIODE	
D50			RD6.2M(B1)	ZENER DIODE	
D51			B30-2004-05	LED	
D52			RD12M(B2)	ZENER DIODE	
D53,54			1SS355	DIODE	
D55			RD3.0M(B2)	ZENER DIODE	
D56			1SS355	DIODE	
D57			B30-2004-05	LED	
D58			LFB01	DIODE	
D59			1SS355	DIODE	
D60,61			DAN202K	DIODE	
D62-69			1SV128	DIODE	
D70			RD6.2M(B1)	ZENER DIODE	
D71			RD4.7M(B2)	ZENER DIODE	
D72			1SS355	DIODE	
D500			1SV166	DIODE	

PARTS LIST

RF UNIT (X44-3210-00)
FINAL UNIT (X45-351X-XX)

Ref. No.	Address	New parts	Parts No.	Description	Destination
D501			RLS73	DIODE	
D502			1SV166	DIODE	
D503			RLS73	DIODE	
D504			1SV166	DIODE	
D505			RLS73	DIODE	
D506			1SV166	DIODE	
D507			RLS73	DIODE	
D508			1SS181	DIODE	
IC1,2			TC9174F	IC (CMOS I/O EXTENSION)	
IC6			NJM2904M	IC (OP AMP X2)	
IC7			M62363FP	IC (8bit D/A CONVERTER)	
IC8			NJM2902M	IC (OP AMP X4)	
IC9			NJM2903M	IC (COMPARATOR X2)	
IC10			NJM78L05UA	IC (VOLTAGE REGULATOR/ +5V)	
IC500-502			F71022	IC (DDS)	
IC503			UPD74HC390G	IC (DUAL DECADE COUNTER)	
IC505,506			SN16913P	IC (DUBLE BALANCED MIXERS)	
IC507			MB86001PF	IC	
IC508			SN76514N	IC (MIXER)	
IC509			MB86001PF	IC	
IC510			TA78L09F	IC (VOLTAGE REGULATOR/ +9V)	
IC511		*	TA78DS09F	IC	
PL1,2		*	B30-2134-05	LAMP	
Q1			DTA124EK	DIGITAL TRANSISTOR	
Q2			DTC124EK	DIGITAL TRANSISTOR	
Q3			FMA1	TRANSISTOR	
Q5			2SC2954	TRANSISTOR	
Q6			2SC2712(Y)	TRANSISTOR	
Q7-12			FMG4	TRANSISTOR	
Q13			3SK131(M)	FET	
Q14,15		*	2SK2218(5)	FET	
Q16			2SC2954	TRANSISTOR	
Q17-20			2SK520(K44)	FET	
Q21			2SD1624(S)	TRANSISTOR	
Q22			2SC2714(Y)	TRANSISTOR	
Q23,24			3SK131(M)	FET	
Q26,27			2SK520(K43)	FET	
Q28-32			2SC2712(Y)	TRANSISTOR	
Q33			3SK131(M)	FET	
Q35,36			3SK184(R)	FET	
Q37-39			3SK131(M)	FET	
Q42			DTC124EK	DIGITAL TRANSISTOR	
Q43,44			2SC2712(Y)	TRANSISTOR	
Q45,46			DTC143TK	DIGITAL TRANSISTOR	
Q47			2SC2712(Y)	TRANSISTOR	
Q48			DTA124EK	DIGITAL TRANSISTOR	
Q49			2SC2712(Y)	TRANSISTOR	
Q50			2SK208(Y)	FET	
Q51			DTC124EK	DIGITAL TRANSISTOR	
Q52			2SC2712(Y)	TRANSISTOR	
Q54			2SC2712(Y)	TRANSISTOR	
Q55			2SB1188(Q,R)	TRANSISTOR	
Q56			DTC124EK	DIGITAL TRANSISTOR	
Q57,58			2SB1188(Q,R)	TRANSISTOR	
Q59,60			DTC143EK	DIGITAL TRANSISTOR	
Q61			FMC3	TRANSISTOR	
Q62			DTA143EK	DIGITAL TRANSISTOR	
Q63			FMC3	TRANSISTOR	
Q64			DTA143EK	DIGITAL TRANSISTOR	
Q65			2SA1162(Y)	TRANSISTOR	
Q66			DTC114EK	DIGITAL TRANSISTOR	
Q70			DTC114EK	DIGITAL TRANSISTOR	
Q71			DTA114EK	DIGITAL TRANSISTOR	
Q500-503			2SC2712(Y)	TRANSISTOR	
Q504,505			2SK508NV(K53)	FET	
Q506-508			2SC2712(Y)	TRANSISTOR	
Q510,511			2SC2712(Y)	TRANSISTOR	
Q512-514			2SC2714(Y)	TRANSISTOR	
Q515			2SC2712(Y)	TRANSISTOR	
Q516-519			DTC114EK	DIGITAL TRANSISTOR	
Q520-523			2SK508NV(K53)	FET	
Q524,525			2SC2714(Y)	TRANSISTOR	
Q526			2SC2996(Y,O)	TRANSISTOR	
Q527-529			2SC3722K(R)	TRANSISTOR	
Q530			2SC2712(Y)	TRANSISTOR	
Q531			2SC2714(Y)	TRANSISTOR	
Q532			2SC2954	TRANSISTOR	
Q533			DTA124EK	DIGITAL TRANSISTOR	
Q534-536			2SC3722K(R)	TRANSISTOR	
Q537			2SD1757K	TRANSISTOR	
Q539			2SC2714(Y)	TRANSISTOR	
Q800			2SC2714(Y)	TRANSISTOR	
TH1			157-101-53019	THERMISTOR 100	
TH2			157-302-53008	THERMISTOR 3K	
TH3			157-101-53019	THERMISTOR 100	
TH4			157-302-53008	THERMISTOR 3K	
S901,902			W02-1687-15	ENCODER (FILTER)	
S903		*	W02-1861-05	ENCODER (RIT/XIT)	
S904			W02-1660-15	ENCODER (M.CH/VFO.CH)	
A501	2F		X58-3390-03	SUB UNIT (VCO2)	

FINAL UNIT (X45-351X-XX) 0-00 : K,P,M,M2,X 2-71 : E,E2,E3,E9

C1			CK73FF1H473Z	CHIP C	0.047UF	Z
C2			CC73FCH1H101J	CHIP C	100PF	J
C3			CC45FCH2H030C	CERAMIC	3.0PF	C
C4			CC73FCH1H560J	CHIP C	56PF	J
C5			CK73FF1H473Z	CHIP C	0.047UF	Z
C6			CE04EW1H010M	ELECTRO	1.0UF	50WV
C7			CK73FB1H103K	CHIP C	0.010UF	K
C8-18			CK73FB1H102K	CHIP C	1000PF	K
C19-33			CK73FB1H103K	CHIP C	0.010UF	K
C101			CM93D2H102J	MICA	1000PF	J
C102			CC45FSL2H331J	CERAMIC	330PF	J
C103			CC45FSL2H271J	CERAMIC	270PF	J
C104,105			CM93D2H102J	MICA	1000PF	J
C106			CC45FSL2H151J	CERAMIC	150PF	J
C107			CM93D2H222J	MICA	2200PF	J
C108		*	CC45FSL2H181J	CERAMIC	180PF	J
C109			CC45FSL2H101J	CERAMIC	100PF	J
C110			CM93D2H102J	MICA	1000PF	J
C111			CM93D2H561J	MICA	560PF	J
C112			CC45FSL2H471J	CERAMIC	470PF	J
C113,114		*	CC45FSL2H181J	CERAMIC	180PF	J
C115			CC45FSL2H391J	CERAMIC	390PF	J
C116			CC45FSL2H471J	CERAMIC	470PF	J

PARTS LSIT

FINAL UNIT (X45-351X-XX)

Ref. No.	Address	New parts	Parts No.	Description			Destination
C117			CC45FSL2H271J	CERAMIC	270PF	J	
C118			CC45FSL2H391J	CERAMIC	390PF	J	
C119			CC45FSL2H471J	CERAMIC	470PF	J	
C120		*	CC45FSL2H181J	CERAMIC	180PF	J	
C121			CC45FSL2H331J	CERAMIC	330PF	J	
C122			CC45FSL2H820J	CERAMIC	82PF	J	
C123			CC45FSL2H331J	CERAMIC	330PF	J	
C124			CC45FSL2H121J	CERAMIC	120PF	J	
C125			CC45FSL2H270J	CERAMIC	27PF	J	
C126			CC45FSL2H151J	CERAMIC	150PF	J	
C127			CC45FSL2H471J	CERAMIC	470PF	J	
C128			CC45FSL2H270J	CERAMIC	27PF	J	
C129			CC45FSL2H220J	CERAMIC	22PF	J	
C130			CC45FSL2H331J	CERAMIC	330PF	J	
C131			CC45FSL2H471J	CERAMIC	470PF	J	
C132			CC45FSL2H680J	CERAMIC	68PF	J	
C133			CC45FSL2H560J	CERAMIC	56PF	J	
C134			CC45FSL2H151J	CERAMIC	150PF	J	
C135			CC45FSL2H471J	CERAMIC	470PF	J	
C136			CC45FSL2H560J	CERAMIC	56PF	J	
C137			CC45FSL2H151J	CERAMIC	150PF	J	
C138			CC45FSL2H331J	CERAMIC	330PF	J	
C139			CC45FSL2H330J	CERAMIC	33PF	J	
C140,141			CC45FSL2H221J	CERAMIC	220PF	J	
C142			CC45FSL2H101J	CERAMIC	100PF	J	
C143,144			CC45FSL2H151J	CERAMIC	150PF	J	
C145			CC45FSL2H120J	CERAMIC	12PF	J	
C146			CC45FSL2H271J	CERAMIC	270PF	J	
C147			CC45FSL2H390J	CERAMIC	39PF	J	
C148,149			CC45FSL2H820J	CERAMIC	82PF	J	
C150			CC45FSL2H100D	CERAMIC	10PF	D	
C151			CC45FSL2H121J	CERAMIC	120PF	J	
C152			CC45FSL2H470J	CERAMIC	47PF	J	
C153			CC45FSL2H330J	CERAMIC	33PF	J	
C154			CC45FSL2H820J	CERAMIC	82PF	J	
C161			CC45FSL2H100D	CERAMIC	10PF	D	
C162		*	CC45FSL2H090D	CERAMIC	9.0PF	D	
C163			CC45FSL2H270J	CERAMIC	27PF	J	
C301,302			CK73FB1H103K	CHIP C	0.010UF	K	
C304			CC73FCH1H101J	CHIP C	100PF	J	
C305			CC73FCH1H181J	CHIP C	180PF	J	
C306			CC73FCH1H390J	CHIP C	39PF	J	
C401			CE04EW1C470M	ELECTRO	47UF	16WV	
C402			CE04EW1C100M	ELECTRO	10UF	16WV	
C405			CE04EW1E470M	ELECTRO	47UF	25WV	
C406,407			CK73FB1E104K	CHIP C	0.10UF	K	
C408			CE04EW1E470M	ELECTRO	47UF	25WV	
C409			CK73FB1E104K	CHIP C	0.10UF	K	
C410			CE04EW1C470M	ELECTRO	47UF	16WV	
C411			CK73FB1H103K	CHIP C	0.010UF	K	
C412,413			CK73FB1H222K	CHIP C	2200PF	K	
C414			CE04EW1C330M	ELECTRO	33UF	16WV	
C415,416			CE04EW1C101M	ELECTRO	100UF	16WV	
C417			CK73FB1H103K	CHIP C	0.010UF	K	
C418-420			CK73FB1H102K	CHIP C	1000PF	K	
C421			CK73FB1H103K	CHIP C	0.010UF	K	
C422			CE04EW1E470M	ELECTRO	47UF	25WV	
C431-433			CK73FB1H103K	CHIP C	0.010UF	K	
C435			CK73FB1E104K	CHIP C	0.10UF	K	

Ref. No.	Address	New parts	Parts No.	Description			Destination
C436			CK73FB1H102K	CHIP C	1000PF	K	
C437			CK73FB1H103K	CHIP C	0.010UF	K	
C438			CE04EW1H010M	ELECTRO	1.0UF	50WV	
C439			CK73FB1H103K	CHIP C	0.010UF	K	
C450			CK73FB1H103K	CHIP C	0.010UF	K	
C452-454			CK73FB1H103K	CHIP C	0.010UF	K	
C455			CK73FB1H102K	CHIP C	1000PF	K	
C456-458			CK73FB1H103K	CHIP C	0.010UF	K	
C461			CC73FSL1H221J	CHIP C	220PF	J	
C465			CK73FB1E104K	CHIP C	0.10UF	K	
C466-471			CK73FF1C105Z	CHIP C	1.0UF	Z	
C472,473			CK73FB1E104K	CHIP C	0.10UF	K	
C479			CE04EW1H010M	ELECTRO	1.0UF	50WV	
C480-485			CK73FB1H103K	CHIP C	0.010UF	K	
C486-488			CK73FB1E104K	CHIP C	0.10UF	K	
C489			CC73FCH1H470J	CHIP C	47PF	J	
C490,491			CK73FB1H103K	CHIP C	0.010UF	K	
C492			CK73FB1E104K	CHIP C	0.10UF	K	
C493			CK73FB1H103K	CHIP C	0.010UF	K	
C494-496			CK73FB1E104K	CHIP C	0.10UF	K	
C497-499			CK73FB1H103K	CHIP C	0.010UF	K	
C502			CK73FB1E473K	CHIP C	0.047UF	K	
C503			CK73FB1H102K	CHIP C	1000PF	K	
C504,505			CK73FB1E473K	CHIP C	0.047UF	K	
C506			CK73FB1E223K	CHIP C	0.022UF	K	
C507			CK73FB1H681K	CHIP C	680PF	K	
C508,509			CK73FB1E473K	CHIP C	0.047UF	K	
C510,511			CK73FB1E223K	CHIP C	0.022UF	K	
C512			CE04EW1C100M	ELECTRO	10UF	16WV	
C513			CC45FSL2H151J	CERAMIC	150PF	J	
C514,515			CK73FB1E223K	CHIP C	0.022UF	K	
C516			CE04EW1E101M	ELECTRO	100UF	25WV	
C517			CM93D2H681J	MICA	680PF	J	
C518,519			C91-1004-05	CHIP C	6800PF	J	
C520			CK73FB1H102K	CHIP C	1000PF	K	
C521			CK73FB1E473K	CHIP C	0.047UF	K	
C522			CE04EW1C100M	ELECTRO	10UF	16WV	
C523			CK73FB1E223K	CHIP C	0.022UF	K	
C524			CE04EW1E470M	ELECTRO	47UF	25WV	
C525			CM73F2H122J	CHIP C	1200PF	J	
C526			CC45FSL2H151J	CERAMIC	150PF	J	
C527			CE04EW1E101M	ELECTRO	100UF	25WV	
C528,529			CK73FB1E104K	CHIP C	0.10UF	K	
C533			CM73F2H561J	CHIP C	560PF	J	
C550			CK73FB1E104K	CHIP C	0.10UF	K	
C551			CK73FB1H103K	CHIP C	0.010UF	K	
C552,553			CK73FB1H102K	CHIP C	1000PF	K	
C554			CK73FB1H223K	CHIP C	0.022UF	K	
C557			CK73FB1H102K	CHIP C	1000PF	K	
C558			CK73FB1H103K	CHIP C	0.010UF	K	
C559			CK73FB1E104K	CHIP C	0.10UF	K	
C560-563		*	C91-1171-05	HV C	0.01UF	1KWV	
C601			CK73FB1H103K	CHIP C	0.010UF	K	
C602			CE04EW1E102M	ELECTRO	1000UF	25WV	
C603			CK73FB1H103K	CHIP C	0.010UF	K	
C605,606			CK73FB1H103K	CHIP C	0.010UF	K	
C608,609			CK73FB1E104K	CHIP C	0.10UF	K	
C610,611			CK73FB1E473K	CHIP C	0.047UF	K	
C612,613			CE04EW1E470M	ELECTRO	47UF	25WV	

PARTS LIST

FINAL UNIT (X45-351X-XX)

Ref. No.	Address	New parts	Parts No.	Description	Destination
C614			CE04EW1E102M	ELECTRO 1000UF 25WV	
C620			CK73FF1E104Z	CHIP C 0.10UF Z	
C621,622			CE04EW1E470M	ELECTRO 47UF 25WV	
C623			CK73FF1E104Z	CHIP C 0.10UF Z	
C701-711			CK73FB1H103K	CHIP C 0.010UF K	
C712			CE04EW1C471M	ELECTRO 470UF 16WV	
C713			CK73FB1E103K	CHIP C 0.010UF K	
C901			CK73FB1H103K	CHIP C 0.010UF K	
C903			CE04EW1H2R2M	ELECTRO 2.2UF 50WV	
TC1			C05-0030-15	TRIMMER CAPACITOR 20PF	
CN1,2			E04-0191-05	RF COAXIAL CABLE SOCKET	
CN3			E40-5469-05	FLAT CABLE CONNECTOR (12P)	
CN4			E40-5068-05	PIN CONNECTOR (11P)	
CN5			E23-0996-05	TERMINAL (TEST)	
CN301			E40-3238-05	PIN CONNECTOR (3P)	
CN302-305			E04-0191-05	RF COAXIAL CABLE SOCKET	
CN306,307			E23-0996-05	TERMINAL (TEST)	
CN401			E23-5745-05	FLAT CABLE CONNECTOR (20P)	
CN402			E40-5469-05	FLAT CABLE CONNECTOR (12P)	
CN403			E40-3242-05	PIN CONNECTOR (7P)	
CN404			E40-3237-05	PIN CONNECTOR (2P)	
CN405			E40-3239-05	PIN CONNECTOR (4P)	
CN406			E40-5470-05	FLAT CABLE CONNECTOR (13P)	
CN407			E40-3240-05	PIN CONNECTOR (5P)	
CN410			E04-0154-05	RF COAXIAL CABLE SOCKET	
CN411			E40-3239-05	PIN CONNECTOR (4P)	
CN412			E04-0154-05	RF COAXIAL CABLE SOCKET	
CN413			E40-3238-05	PIN CONNECTOR (3P)	
CN501,502			E04-0191-05	RF COAXIAL CABLE SOCKET	
CN503			E40-3240-05	PIN CONNECTOR (5P)	
CN504			E40-3238-05	PIN CONNECTOR (3P)	
CN505-507			E23-0996-05	TERMINAL (TEST)	
CN601			E40-3238-05	PIN CONNECTOR (3P)	
CN602			E40-3239-05	PIN CONNECTOR (4P)	
CN603			E40-5470-05	FLAT CABLE CONNECTOR (13P)	
CN604			E40-3240-05	PIN CONNECTOR (5P)	
CN605			E40-3237-05	PIN CONNECTOR (2P)	
W1	1J,2K	*	E37-0539-05	LEAD WIRE WITH CONNECTOR	
W501	1J,2J	*	E37-0525-05	LEAD WIRE WITH TERMINALR	
W502	2J		E37-0067-05	LEAD WIRE WITH MINIPIN PLUG	
202	2G		F29-0014-05	INSULATING BUSH	
F401			F06-4029-05	FUSE (4A 250V) : C/5	
F601			F53-0093-05	FUSE (5A 125V) : D/5	
A401,402			J13-0075-05	FUSE CLIP : C/5	
CF451			L72-0319-05	CERAMIC FILTER (455KHZ)	
CF452			L72-0333-05	CERAMIC FILTER (455KHZ)	
CF453			L72-0366-05	CERAMIC FILTER (455KHZ)	
L1			L40-2221-33	SMALL FIXED INDUCTOR	
L2			L39-0480-15	TROIDAL COIL	
L3			L40-2221-33	SMALL FIXED INDUCTOR	
L4-10			L40-1015-48	SMALL FIXED INDUCTOR (100UH)	
L101			L39-0491-05	TROIDAL COIL (CORE : L92-0107-05)	
L102			L39-0492-05	TROIDAL COIL (CORE : L92-0107-05)	
L103			L39-0493-05	TROIDAL COIL (CORE : L92-0107-05)	
L104			L39-1223-05	TROIDAL COIL (CORE : L92-0107-05)	
L105			L39-1224-05	TROIDAL COIL (CORE : L92-0107-05)	
L106			L39-1225-05	TROIDAL COIL (CORE : L92-0107-05)	
L107			L39-1222-05	TROIDAL COIL (CORE : L92-0107-05)	

Ref. No.	Address	New parts	Parts No.	Description	Destination
L108			L39-1223-05	TROIDAL COIL (CORE : L92-0107-05)	
L109,110			L39-1221-05	TROIDAL COIL (CORE : L92-0108-05)	
L111			L34-1279-05	COIL	
L112			L34-1281-05	COIL	
L113			L34-1279-05	COIL	
L114			L34-1280-05	COIL	
L115			L34-1281-05	COIL	
L116			L34-1282-05	COIL	
L301,302			L40-1015-48	SMALL FIXED INDUCTOR (100UH)	
L303,304			L34-1035-05	COIL	
L401			L40-1015-48	SMALL FIXED INDUCTOR (100UH)	
L450			L40-2215-48	SMALL FIXED INDUCTOR (220UH)	
L451			L34-0943-05	COIL	
L452			L34-4255-05	COIL	
L453		*	L40-4711-15	SMALL FIXED INDUCTOR	
L454			L40-2221-33	SMALL FIXED INDUCTOR	
L455,456			L34-4254-05	COIL	
L457,458			L34-4255-05	COIL	
L460			L40-3395-48	SMALL FIXED INDUCTOR (3.3UH)	
L461-465			L40-1092-12	SMALL FIXED INDUCTOR	
L466			L40-1592-15	SMALL FIXED INDUCTOR	
L501		*	L40-1505-48	SMALL FIXED INDUCTOR (15UH)	
L502			L40-3395-48	SMALL FIXED INDUCTOR (3.3UH)	
L503			L39-0481-05	TROIDAL COIL	
L504			L33-0617-15	CHOKE COIL	
L505,506			L33-0699-05	CHOKE COIL	
L507			L39-1257-05	TROIDAL COIL	
L508,509			L33-0617-15	CHOKE COIL	
L510			L39-0482-05	TROIDAL COIL	
L511			L33-0651-05	CHOKE COIL	
L512			L33-0617-15	CHOKE COIL	
L513			L39-1209-25	TROIDAL COIL	
L514		*	L40-1505-48	SMALL FIXED INDUCTOR (15UH)	
L515,516		*	L92-0150-05	TROIDAL CORE (W501)	
L520			L40-3985-48	SMALL FIXED INDUCTOR (390NH)	
L601			L40-1005-48	SMALL FIXED INDUCTOR (10UH)	
L602			L40-1092-12	SMALL FIXED INDUCTOR	
R	2G,2H		N67-3010-46	PAN HEAD SEMS SCREW	
K	2G,2H		N87-3006-46	BRAZIER HEAD TAPTITE SCREW	
R1			RK73FB2A100J	CHIP R 10 J 1/10W	
R2-5			RK73FB2A330J	CHIP R 33 J 1/10W	
R6-9			RK73FB2A270J	CHIP R 27 J 1/10W	
R10			RK73FB2A181J	CHIP R 180 J 1/10W	
R11-13			RK73FB2A101J	CHIP R 100 J 1/10W	
R14			RK73FB2A473J	CHIP R 47K J 1/10W	
R15			RK73FB2A103J	CHIP R 10K J 1/10W	
R20			RK73FB2A393J	CHIP R 39K J 1/10W	
R21			RK73FB2A223J	CHIP R 22K J 1/10W	
R22			RK73FB2A104J	CHIP R 100K J 1/10W	
R301-304			RK73FB2A104J	CHIP R 100K J 1/10W	
R305			RK73FB2A473J	CHIP R 47K J 1/10W	
R401			RK73FB2A100J	CHIP R 10 J 1/10W	
R402			RK73FB2A272J	CHIP R 2.7K J 1/10W	
R403,404			RK73FB2A273J	CHIP R 27K J 1/10W	
R405			RK73FB2A473J	CHIP R 47K J 1/10W	
R406			RK73FB2A150J	CHIP R 15 J 1/10W	
R407			RK73FB2A221J	CHIP R 220 J 1/10W	
R408			RK73FB2A101J	CHIP R 100 J 1/10W	

PARTS LSIT

FINAL UNIT (X45-351X-XX)

Ref. No.	Address	New parts	Parts No.	Description	Destination
R409,410			R92-1332-05	CHIP R 160 J 1W	
R411			RK73FB2A182J	CHIP R 1.8K J 1/10W	
R415			RK73FB2A101J	CHIP R 100 J 1/10W	
R416			RK73FB2A220J	CHIP R 22 J 1/10W	
R417			RK73FB2A101J	CHIP R 100 J 1/10W	
R418			RK73FB2A102J	CHIP R 1.0K J 1/10W	
R419			RK73FB2A104J	CHIP R 100K J 1/10W	
R420			RK73FB2A102J	CHIP R 1.0K J 1/10W	
R421			RK73FB2A393J	CHIP R 39K J 1/10W	
R422			RK73FB2A220J	CHIP R 22 J 1/10W	
R423,424			RK73FB2A331J	CHIP R 330 J 1/10W	
R425			RK73FB2A220J	CHIP R 22 J 1/10W	
R426			RK73FB2A103J	CHIP R 10K J 1/10W	
R427			RK73FB2A102J	CHIP R 1.0K J 1/10W	
R428			RK73FB2A222J	CHIP R 2.2K J 1/10W	
R429			RK73FB2A102J	CHIP R 1.0K J 1/10W	
R439			RK73FB2A470J	CHIP R 47 J 1/10W	
R440			RK73FB2A152J	CHIP R 1.5K J 1/10W	
R441,442			RK73FB2A332J	CHIP R 3.3K J 1/10W	
R443,444			RK73FB2A101J	CHIP R 100 J 1/10W	
R445,446			RK73FB2A472J	CHIP R 4.7K J 1/10W	
R447,448			RK73FB2A101J	CHIP R 100 J 1/10W	
R449,450			RK73FB2A222J	CHIP R 2.2K J 1/10W	
R451,452			RK73FB2A101J	CHIP R 100 J 1/10W	
R453			RK73FB2A152J	CHIP R 1.5K J 1/10W	
R454,455			RK73FB2A332J	CHIP R 3.3K J 1/10W	
R456			RK73FB2A333J	CHIP R 33K J 1/10W	
R457,458			RK73FB2A104J	CHIP R 100K J 1/10W	
R459			RK73FB2A471J	CHIP R 470 J 1/10W	
R460			RK73FB2A220J	CHIP R 22 J 1/10W	
R461			RK73FB2A102J	CHIP R 1.0K J 1/10W	
R462			RK73FB2A101J	CHIP R 100 J 1/10W	
R463,464			RK73FB2A151J	CHIP R 150 J 1/10W	
R465,466			RK73FB2A471J	CHIP R 470 J 1/10W	
R467-470			RK73FB2A330J	CHIP R 33 J 1/10W	
R471			RK73FB2A102J	CHIP R 1.0K J 1/10W	
R472			RK73FB2A104J	CHIP R 100K J 1/10W	
R473			RK73FB2A473J	CHIP R 47K J 1/10W	
R474			RK73FB2A104J	CHIP R 100K J 1/10W	
R475			RK73FB2A473J	CHIP R 47K J 1/10W	
R476			RK73FB2A472J	CHIP R 4.7K J 1/10W	
R480			RK73FB2A470J	CHIP R 47 J 1/10W	
R481			RK73FB2A471J	CHIP R 470 J 1/10W	
R482			RK73FB2A330J	CHIP R 33 J 1/10W	
R483			RK73FB2A221J	CHIP R 220 J 1/10W	
R484			RK73FB2A223J	CHIP R 22K J 1/10W	
R485			RK73FB2A822J	CHIP R 8.2K J 1/10W	
R486			RK73FB2A560J	CHIP R 56 J 1/10W	
R487-489			RK73FB2A223J	CHIP R 22K J 1/10W	
R490			RK73FB2A681J	CHIP R 680 J 1/10W	
R491,492			RK73FB2A471J	CHIP R 470 J 1/10W	
R501			RK73FB2A101J	CHIP R 100 J 1/10W	
R502			RK73FB2A331J	CHIP R 330 J 1/10W	
R503			RK73FB2A681J	CHIP R 680 J 1/10W	
R504			RK73FB2A331J	CHIP R 330 J 1/10W	
R505,506			RK73FB2A6R8J	CHIP R 6.8 J 1/10W	
R507			RK73FB2A681J	CHIP R 680 J 1/10W	
R508,509			R92-0696-05	CHIP R 33 J 1/4W	
R510			RK73FB2A331J	CHIP R 330 J 1/10W	

Ref. No.	Address	New parts	Parts No.	Description	Destination
R511			RK73FB2A151J	CHIP R 150 J 1/10W	
R512,513			R92-1318-05	CHIP R 100 J 1W	
R514-517			RS14DB3A5R6J	FL-PROOF RS 5.6 J 1W	
R518,519			RS14DB3A150J	FL-PROOF RS 15 J 1W	
R520			RK73FB2A561J	CHIP R 560 J 1/10W	
R521,522			RS14DB3A5R6J	FL-PROOF RS 5.6 J 1W	
R530		*	R92-2543-05	FIXED RESISTOR 6.8 1/2W	
R601			RK73FB2A472J	CHIP R 4.7K J 1/10W	
R701			RK73FB2A103J	CHIP R 10K J 1/10W	
R702			RK73FB2A101J	CHIP R 100 J 1/10W	
R703-705			RK73FB2A562J	CHIP R 5.6K J 1/10W	
R706			RK73FB2A472J	CHIP R 4.7K J 1/10W	
R707			RK73FB2A821J	CHIP R 820 J 1/10W	
R708			RK73FB2A272J	CHIP R 2.7K J 1/10W	
R709			RK73FB2A333J	CHIP R 33K J 1/10W	
R710			R92-1282-05	CHIP R 10 J 1W	
R712			R92-1316-05	CHIP R 39 J 1W	
R713			RK73FB2A471J	CHIP R 470 J 1/10W	
R714			RK73FB2A153J	CHIP R 15K J 1/10W	
VR1			R12-6730-05	TRIMMING POT. 220	
VR501,502			R12-6734-05	TRIMMING POT. 1K	
W301			R92-0150-05	JUMPER REST 0 OHM (ANT1)	
W303			R92-0150-05	JUMPER REST 0 OHM (ANT2)	
K1-14			S51-1420-05	RELAY	
K301			S51-2417-05	RELAY	
K302			S51-1429-05	RELAY	
K601			S51-2423-05	RELAY	
D1,2			1SS101	DIODE	
D3			RLZJ5.1B	ZENER DIODE	
D4-10			LFB01	DIODE	
D11			DAP202K	DIODE	
D301,302			DSA301LA	DIODE	
D303,304			LFB01	DIODE	
D401			1SS226	DIODE	
D402		*	RD9.1M(B2)	ZENER DIODE	
D450			DAN235K	DIODE	
D451-456			1SV128	DIODE	
D457			DAN235K	DIODE	
D501			MA27T-B	DIODE	
D502,503			SV03YS	DIODE	
D504			SG-5L(R)	DIODE	
D601			LFB01	DIODE	
D701			DAN202K	DIODE	
D702			LFB01	DIODE	
IC1			TC9174F	IC (CMOS I/O EXTENSION)	
IC402			UPC7805H	IC (VOLTAGE REGULATOR/ +5V)	
IC601,602			UPC7808H	IC (VOLTAGE REGULATOR/ +8V)	
IC701			NJM2904M	IC (OP AMP X2)	
Q1-4			FMA7	TRANSISTOR	
Q5			DTC114EK	DIGITAL TRANSISTOR	
Q6			FMC2	TRANSISTOR	
Q10-16			DTB143EK	DIGITAL TRANSISTOR	
Q401			2SA1162(Y)	TRANSISTOR	
Q402,403			2SC2712(Y)	TRANSISTOR	
Q404			2SD1624(S)	TRANSISTOR	
Q405			2SD1406(Y)	TRANSISTOR	
Q460,461			3SK131(M)	FET	
Q470,471			3SK131(M)	FET	

PARTS LIST

FINAL UNIT (X45-351X-XX)
AT UNIT (X53-3340-02)

Ref. No.	Address	New parts	Parts No.	Description	Destination
Q472			2SC2712(Y)	TRANSISTOR	
Q475			3SK131(M)	FET	
Q501			2SC1971	TRANSISTOR	
Q502,503			2SC3133	TRANSISTOR	
Q504			2SD1406(Y)	TRANSISTOR	
Q505,506			2SC2879	TRANSISTOR	
Q507			2SD1406(Y)	TRANSISTOR	
Q601			DTC143TK	DIGITAL TRANSISTOR	
Q701			DTC114TK	DIGITAL TRANSISTOR	
Q702,703			DTD114EK	DIGITAL TRANSISTOR	
TH452			157-502-53002	THERMISTOR 5K	
TH701			5TP-41S	THERMISTOR	
AT UNIT (X53-3340-02)					
C1			CC45FSL2H330J	CERAMIC 33PF J	
C2-8			CK73FB1E103K	CHIP C 0.010UF K	
C9,10			CK73FB1H102K	CHIP C 1000PF K	
C11			CK73FB1E103K	CHIP C 0.010UF K	
C12			CE04EW1C470M	ELECTRO 47UF 16WV	
C13-15			CK73FB1E103K	CHIP C 0.010UF K	
C16			CK73EF1E474Z	CHIP C 0.47UF Z	
C17-19			CK73FB1E103K	CHIP C 0.010UF K	
C20			CE04EW1C101M	ELECTRO 100UF 16WV	
C21-23			CK73FB1E103K	CHIP C 0.010UF K	
C24			CK73EF1E474Z	CHIP C 0.47UF Z	
C25			CK73FB1E103K	CHIP C 0.010UF K	
C26			CE04EW1C101M	ELECTRO 100UF 16WV	
C27-37			CK73FB1E103K	CHIP C 0.010UF K	
C38			CK73FB1H103K	CHIP C 0.010UF K	
C101-103			CK73FB1H103K	CHIP C 0.010UF K	
C105-108			CK73FB1H103K	CHIP C 0.010UF K	
TC1			C05-0031-15	TRIMMER CAPACITOR 10PF	
VC1,2	2L		C02-0023-05	VARIABLE CAPACITOR 300PF	
A5	3L		D40-0633-15	GEAR ASSY	
CN1,2			E04-0157-05	RF COAXIAL CABLE SOCKET	
CN3			E40-3239-05	PIN CONNECTOR (4P)	
CN4			E40-3240-05	PIN CONNECTOR (5P)	
CN5			E40-3238-05	PIN CONNECTOR (3P)	
CN6			E40-3237-05	PIN CONNECTOR (2P)	
CN7			E40-5068-05	PIN CONNECTOR (11P)	
CN101			E40-5066-05	PIN CONNECTOR (9P)	
–			F20-1081-04	INSULATING SHEET	
A1	2M		F11-1142-22	SHIELDING CASE	
A2	2M		F10-1401-23	SHIELDING PLATE	
A3	1M		F11-1143-14	SHIELDING COVER	
A4	2M		F11-1144-14	SHIELDING COVER	
A6	1M	*	F10-2192-04	SHIELDING COVER	
–			J61-0307-05	BAND	
L1			L39-0496-05	COIL	
L2			L39-0415-25	COIL	
L3-6			L40-1011-13	SMALL FIXED INDUCTOR	
L7-11			L40-1011-14	SMALL FIXED INDUCTOR	
L12-14			L40-1011-13	SMALL FIXED INDUCTOR	
L101-103			L40-1011-14	SMALL FIXED INDUCTOR	
L105-108			L40-1011-14	SMALL FIXED INDUCTOR	
L109			L34-1276-15	COIL	
L110			L39-0479-05	COIL	
L111			L39-0495-05	COIL	
L112			L39-0494-15	COIL	
T110-112			L92-0117-05	TROIDAL CORE	
K	1M,2M		N87-3006-46	BRAZIER HEAD TAPTITE SCREW	
S	1M,2M		N88-3006-46	FLAT HEAD TAPTITE SCREW	
R1,2			RD14BB2E101J	RD 100 J 1/4W	
R3			RK73FB2A102J	CHIP R 1.0K J 1/10W	
R4			RD14BB2E560J	RD 56 J 1/4W	
R5,6			RK73FB2A181J	CHIP R 180 J 1/10W	
R7-10			RK73FB2A103J	CHIP R 10K J 1/10W	
R11			RK73FB2A563J	CHIP R 56K J 1/10W	
R12			RK73FB2A121J	CHIP R 120 J 1/10W	
R13			RK73FB2A101J	CHIP R 100 J 1/10W	
R14			RK73FB2A563J	CHIP R 56K J 1/10W	
R15			RK73FB2A121J	CHIP R 120 J 1/10W	
R16			RK73FB2A101J	CHIP R 100 J 1/10W	
R17			RK73FB2A330J	CHIP R 33 J 1/10W	
R18			RK73FB2A103J	CHIP R 10K J 1/10W	
R19			RK73FB2A330J	CHIP R 33 J 1/10W	
R20-23			RK73FB2A103J	CHIP R 10K J 1/10W	
R24,25			RD14BB2E100J	RD 10 J 1/4W	
R26-30			RK73FB2A103J	CHIP R 10K J 1/10W	
R31			RK73FB2A472J	CHIP R 4.7K J 1/10W	
R32			RK73FB2A103J	CHIP R 10K J 1/10W	
R33			RD14BB2E101J	RD 100 J 1/4W	
R34			RK73FB2A472J	CHIP R 4.7K J 1/10W	
VR101,102	3L		R01-3435-05	POTENTIOMETER 10K	
W12-17			R92-0679-05	CHIP R 0 OHM	
W18-28			R92-0670-05	CHIP R 0 OHM	
W29-31			R92-0679-05	CHIP R 0 OHM	
W32			R92-0670-05	CHIP R 0 OHM	
W34			R92-0670-05	CHIP R 0 OHM	
W35,36			R92-0679-05	CHIP R 0 OHM	
W37			R92-0670-05	CHIP R 0 OHM	
W40	2B	*	E33-1984-05	PROCESSED WIRE KIT (to FIL:CN4)	
W40	2B	*	E33-1984-05	PROCESSED WIRE KIT (to CONT:CN4)	
W40	2B	*	E33-1984-05	PROCESSED WIRE KIT (to RL:AT1)	
W40	2B	*	E33-1984-05	PROCESSED WIRE KIT (to RL:AT2)	
K1			S51-2407-05	RELAY	
K101-103			S76-0401-05	RELAY	
K105-108			S76-0401-05	RELAY	
M1,2	3L		T42-0453-05	DC MOTOR	
D1,2			1SS101	DIODE	
D3-8			1SS226	DIODE	
D10			1S1555	DIODE	
D101-103			1S1555	DIODE	
D105-108			1S1555	DIODE	
D109,110			RLS73	DIODE	
IC1			SN74S74N	IC (ONE SHOT MULTI)	
IC2,3			TC4066BP	IC (ANALOG/ DIGITAL SW)	
IC4,5			BA6109U2	IC (MOTOR DRIVER)	
IC6			NJM2903S	IC (DUAL COMPALATOR)	
IC7			MC78L05M	IC (VOLTAGE REGULATOR/ +5V)	

PARTS LSIT

AT UNIT (X53-3340-02)
CONTROL UNIT (X53-356X-XX)

Ref. No.	Address	New parts	Parts No.	Description	Destination
Q1,2			2SC2714(Y)	TRANSISTOR	
Q3			DTC114EK	DIGITAL TRANSISTOR	
Q4			2SA1204(Y)	TRANSISTOR	
Q5			DTC114EK	DIGITAL TRANSISTOR	
CONTROL UNIT (X53-356X-XX) 0-11 : K,P 0-21 : M 0-22 : M2 0-71 : X 2-71 : E 2-72 : E2 2-73 : E3 2-74 : E9					
C1,2			CK73GB1H102K	CHIP C 1000PF K	
C3			C92-0044-05	CHIP-ELE 47UF 10WV	
C4			CK73GB1H102K	CHIP C 1000PF K	
C5			C92-0032-05	CHIP-ELE 4.7UF 25WV	
C6,7			CK73GF1E104Z	CHIP C 0.10UF Z	
C8			C92-0037-05	CHIP-ELE 10UF 16WV	
C9			C92-0032-05	CHIP-ELE 4.7UF 25WV	
C10,11			CK73GF1E104Z	CHIP C 0.10UF Z	
C12			C92-0037-05	CHIP-ELE 10UF 16WV	
C13			C92-0032-05	CHIP-ELE 4.7UF 25WV	
C14,15			CK73GF1E104Z	CHIP C 0.10UF Z	
C16			C92-0037-05	CHIP-ELE 10UF 16WV	
C17-41			CK73GB1H102K	CHIP C 1000PF K	
C42			CK73GB1H103K	CHIP C 0.010UF K	
C43,44			CK73GB1H102K	CHIP C 1000PF K	
C45			C92-0044-05	CHIP-ELE 47UF 10WV	
C46,47			CK73GB1H103K	CHIP C 0.010UF K	
C48,49			CC73GCH1H330J	CHIP C 33PF J	
C50-54			CK73GB1H103K	CHIP C 0.010UF K	
C55			C92-0044-05	CHIP-ELE 47UF 10WV	
C56,57			CK73GF1E104Z	CHIP C 0.10UF Z	
C58			CK73GB1H103K	CHIP C 0.010UF K	
C59			C92-0044-05	CHIP-ELE 47UF 10WV	
C60			CK73GB1H103K	CHIP C 0.010UF K	
C61			C92-0044-05	CHIP-ELE 47UF 10WV	
C62-77			CC73GCH1H101J	CHIP C 100PF J	
C78-80			CK73GB1H103K	CHIP C 0.010UF K	
C81-88			CC73GCH1H101J	CHIP C 100PF J	
C89-93			CK73GB1H103K	CHIP C 0.010UF K	
C94-96			C92-0037-05	CHIP-ELE 10UF 16WV	
C97			C92-0044-05	CHIP-ELE 47UF 10WV	
C98-102			CK73GB1H103K	CHIP C 0.010UF K	
C103,104			CC73GCH1H220J	CHIP C 22PF J	
C105-107			CK73GB1H103K	CHIP C 0.010UF K	
C108			C92-0044-05	CHIP-ELE 47UF 10WV	
C109,110			CK73GB1H103K	CHIP C 0.010UF K	
C111-113			C92-0023-05	CHIP-ELE 1.0UF 50WV	
C114			CK73GB1H103K	CHIP C 0.010UF K	
C115			C92-0023-05	CHIP-ELE 1.0UF 50WV	
C116,117			CK73GB1H103K	CHIP C 0.010UF K	
C118-124			CK73GB1H102K	CHIP C 1000PF K	
C125,126			CK73GB1H103K	CHIP C 0.010UF K	
C127-141			CC73GCH1H101J	CHIP C 100PF J	
C142-147			CK73GB1H102K	CHIP C 1000PF K	
C148-150			CC73GCH1H101J	CHIP C 100PF J	
C152			CC73GCH1H101J	CHIP C 100PF J	
C153-175			CK73GB1H102K	CHIP C 1000PF K	
C177-183			CK73GB1H102K	CHIP C 1000PF K	
C184-187			CK73GB1H103K	CHIP C 0.010UF K	
C188-223			CK73GB1H102K	CHIP C 1000PF K	
C224,225			CC73GSL1H471J	CHIP C 470PF J	

Ref. No.	Address	New parts	Parts No.	Description	Destination
C226,227			CK73GB1H103K	CHIP C 0.010UF K	
C228,229			CK73GB1H102K	CHIP C 1000PF K	
C230			CK73GB1H103K	CHIP C 0.010UF K	
C231-233			CK73GB1H102K	CHIP C 1000PF K	
C501-509			CK73GB1H103K	CHIP C 0.010UF K	
C511-521			CK73GB1H103K	CHIP C 0.010UF K	
C522			CK73GB1H102K	CHIP C 1000PF K	
C523			CK73GF1E104Z	CHIP C 0.10UF Z	
C601-604			CK73GB1H103K	CHIP C 0.010UF K	
C605			CK73GF1E104Z	CHIP C 0.10UF Z	
C606			CK73GB1H102K	CHIP C 1000PF K	
401	1D		E23-0623-04	EARTH LUG	
CN1,2		*	E40-5744-05	FLAT CABLE CONNECTOR (20P)	
CN3			E40-3239-05	PIN CONNECTOR (4P)	
CN4		*	E40-5763-05	PIN CONNECTOR (12P)	
CN5		*	E40-5744-05	FLAT CABLE CONNECTOR (20P)	
CN6			E40-5761-05	FLAT CABLE CONNECTOR (26P)	
CN7		*	E40-5742-05	FLAT CABLE CONNECTOR (13P)	
CN8		*	E40-5739-05	FLAT CABLE CONNECTOR (10P)	
CN9,10		*	E40-5740-05	FLAT CABLE CONNECTOR (20P)	
CN11		*	E40-5744-05	FLAT CABLE CONNECTOR (20P)	
CN12			E02-2015-05	SOCKET FOR IC	
CN501		*	E40-5740-05	FLAT CABLE CONNECTOR (20P)	
CN601			E40-3251-05	PIN CONNECTOR (7P)	
J601			E06-0858-15	CYLINDRICAL RECEPTACLE (8P MIC)	
A1	3G	*	F01-1007-04	HEAT SINK	
402	3G		G02-0574-04	FLAT SPRING	
403	2A	*	J19-1570-05	HOLDER (BATT)	
L1-3			L40-4705-48	SMALL FIXED INDUCTOR (47UH)	
L4,5			L40-1292-18	SMALL FIXED INDUCTOR	
L6,7			L40-4705-48	SMALL FIXED INDUCTOR (47UH)	
L8			L40-1292-18	SMALL FIXED INDUCTOR	
L11-25			L40-4705-48	SMALL FIXED INDUCTOR (47UH)	
L26,27			L40-1005-48	SMALL FIXED INDUCTOR (10UH)	
L28			L40-4705-48	SMALL FIXED INDUCTOR (47UH)	
X1		*	L77-1589-05	CRYSTAL RESONATOR (11.0592MHZ)	
X2			L78-0325-05	RESONATOR (2.0MHZ)	
G	3G		N32-2606-46	FLAT HEAD MACHIN SCREW	
R1,2			RK73GB1J101J	CHIP R 100 J 1/16W	
R3,4			RK73GB1J102J	CHIP R 1.0K J 1/16W	
R5			RK73GB1J101J	CHIP R 100 J 1/16W	
R6			RK73GB1J473J	CHIP R 47K J 1/16W	
R7-9			RK73GB1J102J	CHIP R 1.0K J 1/16W	
R10-28			RK73GB1J101J	CHIP R 100 J 1/16W	
R29			RK73GB1J105J	CHIP R 1.0M J 1/16W	
R30-37			RK73GB1J101J	CHIP R 100 J 1/16W	
R39			RK73GB1J102J	CHIP R 1.0K J 1/16W	
R40			RK73GB1J471J	CHIP R 470 J 1/16W	
R41			RK73GB1J103J	CHIP R 10K J 1/16W	
R42			RK73GB1J222J	CHIP R 2.2K J 1/16W	
R43,44			RK73GB1J104J	CHIP R 100K J 1/16W	
R45			RK73GB1J472J	CHIP R 4.7K J 1/16W	
R46			RK73GB1J102J	CHIP R 1.0K J 1/16W	
R47			RK73GB1J473J	CHIP R 47K J 1/16W	
R48			RK73GB1J102J	CHIP R 1.0K J 1/16W	X

PARTS LIST

CONTROL UNIT (X53-356X-XX)

Ref. No.	Address	New parts	Parts No.	Description	Destination
R49			RK73GB1J473J	CHIP R 47K J 1/16W	
R51			RK73GB1J473J	CHIP R 47K J 1/16W	
R52			RK73GB1J103J	CHIP R 10K J 1/16W	
R53			RK73GB1J102J	CHIP R 1.0K J 1/16W	E3E9M
R54			RK73GB1J473J	CHIP R 47K J 1/16W	
R55,56			RK73GB1J103J	CHIP R 10K J 1/16W	
R57			RK73GB1J102J	CHIP R 1.0K J 1/16W	EE2E3E9
R58			RK73GB1J473J	CHIP R 47K J 1/16W	
R59-68			RK73GB1J103J	CHIP R 10K J 1/16W	
R69			RK73GB1J102J	CHIP R 1.0K J 1/16W	E2MM2
R70			RK73GB1J473J	CHIP R 47K J 1/16W	
R71,72			RK73GB1J103J	CHIP R 10K J 1/16W	
R73			RK73GB1J102J	CHIP R 1.0K J 1/16W	E
R74			RK73GB1J473J	CHIP R 47K J 1/16W	
R75-85			RK73GB1J103J	CHIP R 10K J 1/16W	
R86,87			RK73GB1J472J	CHIP R 4.7K J 1/16W	
R88			RK73GB1J153J	CHIP R 15K J 1/16W	
R89			RK73GB1J334J	CHIP R 330K J 1/16W	
R90-92			RK73GB1J153J	CHIP R 15K J 1/16W	
R93			RK73GB1J103J	CHIP R 10K J 1/16W	
R94,95			RK73GB1J153J	CHIP R 15K J 1/16W	
R96			RK73GB1J105J	CHIP R 1.0M J 1/16W	
R97			RK73GB1J102J	CHIP R 1.0K J 1/16W	
R98			RK73GB1J473J	CHIP R 47K J 1/16W	
R99			RK73GB1J102J	CHIP R 1.0K J 1/16W	
R100-105			RK73GB1J105J	CHIP R 1.0M J 1/16W	
R107			RK73GB1J105J	CHIP R 1.0M J 1/16W	
R108-119			RK73GB1J104J	CHIP R 100K J 1/16W	
R120-130			RK73GB1J101J	CHIP R 100 J 1/16W	
R131			RK73GB1J102J	CHIP R 1.0K J 1/16W	
R132,133			RK73GB1J103J	CHIP R 10K J 1/16W	
R134-137			RK73GB1J101J	CHIP R 100 J 1/16W	
R138-140			RK73GB1J101J	CHIP R 100 J 1/16W	
R141-144			RK73GB1J102J	CHIP R 1.0K J 1/16W	
R145			RK73GB1J223J	CHIP R 22K J 1/16W	
R146,147			RK73GB1J473J	CHIP R 47K J 1/16W	
R148-150			RK73GB1J101J	CHIP R 100 J 1/16W	
R152-169			RK73GB1J101J	CHIP R 100 J 1/16W	
R170			RK73GB1J474J	CHIP R 470K J 1/16W	
R171			RK73GB1J102J	CHIP R 1.0K J 1/16W	
R172-177			RK73GB1J101J	CHIP R 100 J 1/16W	
R179-201			RK73GB1J101J	CHIP R 100 J 1/16W	
R202			RK73GB1J473J	CHIP R 47K J 1/16W	
R203-214			RK73GB1J101J	CHIP R 100 J 1/16W	
R215			RK73GB1J473J	CHIP R 47K J 1/16W	
R216-222			RK73GB1J101J	CHIP R 100 J 1/16W	
R223			RK73GB1J333J	CHIP R 33K J 1/16W	
R224			RK73GB1J101J	CHIP R 100 J 1/16W	
R225			RK73GB1J473J	CHIP R 47K J 1/16W	
R226			RK73GB1J104J	CHIP R 100K J 1/16W	
R227-234			RK73GB1J103J	CHIP R 10K J 1/16W	
R235-237			RK73GB1J102J	CHIP R 1.0K J 1/16W	
R238-240			RK73GB1J101J	CHIP R 100 J 1/16W	
R241			RK73GB1J473J	CHIP R 47K J 1/16W	
R242,243			RK73GB1J102J	CHIP R 1.0K J 1/16W	
R244			RK73GB1J101J	CHIP R 100 J 1/16W	KPMXE
R244			RK73GB1J101J	CHIP R 100 J 1/16W	E2E3E9
R245			RK73GB1J473J	CHIP R 47K J 1/16W	
R501-504			RK73GB1J473J	CHIP R 47K J 1/16W	

Ref. No.	Address	New parts	Parts No.	Description	Destination
R505			RK73GB1J391J	CHIP R 390 J 1/16W	
R506			RK73GB1J271J	CHIP R 270 J 1/16W	
R507			RK73GB1J473J	CHIP R 47K J 1/16W	
R508			RK73GB1J391J	CHIP R 390 J 1/16W	
R509			RK73GB1J271J	CHIP R 270 J 1/16W	
R510			RK73GB1J391J	CHIP R 390 J 1/16W	
R511			RK73GB1J271J	CHIP R 270 J 1/16W	
R512			RK73GB1J391J	CHIP R 390 J 1/16W	
R513			RK73GB1J271J	CHIP R 270 J 1/16W	
R514			RK73GB1J473J	CHIP R 47K J 1/16W	
R515			RK73GB1J391J	CHIP R 390 J 1/16W	
R516			RK73GB1J271J	CHIP R 270 J 1/16W	
R517			RK73GB1J391J	CHIP R 390 J 1/16W	
R518			RK73GB1J271J	CHIP R 270 J 1/16W	
R519			RK73GB1J391J	CHIP R 390 J 1/16W	
R520			RK73GB1J271J	CHIP R 270 J 1/16W	
R521-523			RK73GB1J473J	CHIP R 47K J 1/16W	
R524			RK73GB1J102J	CHIP R 1.0K J 1/16W	
R525			RK73GB1J473J	CHIP R 47K J 1/16W	
R526-527			RK73GB1J101J	CHIP R 100 J 1/16W	
R528			RK73GB1J391J	CHIP R 390 J 1/16W	
R529			RK73GB1J271J	CHIP R 270 J 1/16W	
R530			RK73GB1J391J	CHIP R 390 J 1/16W	
R531			RK73GB1J271J	CHIP R 270 J 1/16W	
R532			RK73GB1J391J	CHIP R 390 J 1/16W	
R533			RK73GB1J271J	CHIP R 270 J 1/16W	
R534			RK73GB1J391J	CHIP R 390 J 1/16W	
R535			RK73GB1J271J	CHIP R 270 J 1/16W	
R536-539			RK73GB1J101J	CHIP R 100 J 1/16W	
R540			RK73GB1J473J	CHIP R 47K J 1/16W	
R541,542			RK73GB1J101J	CHIP R 100 J 1/16W	
R543-546			RK73GB1J473J	CHIP R 47K J 1/16W	
R547,548			RK73GB1J103J	CHIP R 10K J 1/16W	
R549-555			RK73GB1J473J	CHIP R 47K J 1/16W	
R556			RK73GB1J103J	CHIP R 10K J 1/16W	
S1			S62-0412-05	SLIDE SWITCH	
S501-545		*	S70-0439-05	TACT SWITCH	
S546-551		*	S70-0439-05	TACT SWITCH	
D1-3			1SS355	DIODE	
D4		*	RD7.5M(B3)	ZENER DIODE	
D5-12			1SS355	DIODE	
D501			B30-2036-05	LED (RED)	
D502		*	B30-2146-05	LED (ORANGE)	
D510-519		*	B30-2146-05	LED (ORANGE)	
IC1,2			UPC7805H	IC (VOLTAGE REGULATOR/ +5V)	
IC3			TA78L08F	IC (VOLTAGE REGULATOR)	
IC4			AT2402N10SI2.7	IC (2kbit SERIAL EEPROMM)	
IC5			MB3780A	IC (BATTERY BACKUP)	
IC6		*	M37702S4BFP	IC	
IC7			TC7S04F	IC (2CH NAND GATE)	
IC8			LC3564QMF-10	IC	
IC9			TC4052BF	IC (4CH MPX/DE-MPX)	
IC10			TC7S04F	IC (2CH NAND GATE)	
IC11		*	TC74VHC32F	IC	
IC12		*	27C512RJLVC	IC	
IC13			TC4052BF	IC (4CH MPX/DE-MPX)	
IC14		*	TC74VHC08F	IC	
IC15		*	TC74VHC245F	IC	

PARTS LSIT

CONTROL UNIT (X53-356X-XX)
TX-RX UNIT (X57-4620-00)

Ref. No.	Address	New parts	Parts No.	Description	Destination
IC16			CXD1095Q	IC (I/O EXPANDER)	
IC17,18		*	TC74VHC138F	IC	
IC19		*	TC74VHC573F	IC	
IC20,21			LZ92K371	IC (ENCODER PROCESSOR)	
IC22,23			CXD1095Q	IC (I/O EXPANDER)	
IC24		*	68HC05G2419553	IC	
IC25,26			TC4584BF	IC (BUFF)	
IC27		*	ADM232LAR	IC	
IC28			NJM2904M	IC (OP AMP X2)	
IC29			TC7S32F	IC (2CH NAND GATE)	
IC501-504			UPD6345GS	IC	
Q1			DTA143EK	DIGITAL TRANSISTOR	
Q2			DTC143EK	DIGITAL TRANSISTOR	
Q3,4			DTC114EK	DIGITAL TRANSISTOR	
Q5			DTC143EK	DIGITAL TRANSISTOR	
Q6-11			DTC114EK	DIGITAL TRANSISTOR	
Q12,13			DTA143EK	DIGITAL TRANSISTOR	
Q14-22			DTC143EK	DIGITAL TRANSISTOR	
Q23,24			DTA143EK	DIGITAL TRANSISTOR	
Q27,28			DTC114EK	DIGITAL TRANSISTOR	
Q29-31			DTC143TK	DIGITAL TRANSISTOR	
Q33			DTC143EK	DIGITAL TRANSISTOR	
Q501,502			DTC114EK	DIGITAL TRANSISTOR	

TX-RX UNIT (X57-4620-00)

C1			C90-2045-05	ELECTRO	2.2UF	25WV	
C2,3			CK73FF1E104Z	CHIP C	0.10UF	Z	
C4,5			CC73FCH1H330J	CHIP C	33PF	J	
C6			C90-2045-05	ELECTRO	2.2UF	25WV	
C7,8			CK73FF1E104Z	CHIP C	0.10UF	Z	
C9-14			CC73FCH1H330J	CHIP C	33PF	J	
C15			CC73FSL1H152J	CHIP C	1500PF	J	
C16			CC73FCH1H101J	CHIP C	100PF	J	
C17			CC73FSL1H152J	CHIP C	1500PF	J	
C18			CC73FCH1H101J	CHIP C	100PF	J	
C19-22			CK73FF1E104Z	CHIP C	0.10UF	Z	
C23			C90-2045-05	ELECTRO	2.2UF	25WV	
C24			CK73FB1H223K	CHIP C	0.022UF	K	
C25			CK73FF1E104Z	CHIP C	0.10UF	Z	
C26,27			CK73FB1H223K	CHIP C	0.022UF	K	
C28			C90-2045-05	ELECTRO	2.2UF	25WV	
C29			CK73FF1E104Z	CHIP C	0.10UF	Z	
C30			CK73GB1H102K	CHIP C	1000PF	K	
C31			CK73FB1H471K	CHIP C	470PF	K	
C32			CK73FF1E104Z	CHIP C	0.10UF	Z	
C33			CK73GB1H102K	CHIP C	1000PF	K	
C34			C90-2045-05	ELECTRO	2.2UF	25WV	
C36			CC73GCH1H330J	CHIP C	33PF	J	
C37			CK73GB1H102K	CHIP C	1000PF	K	
C38			CK73GB1H103K	CHIP C	0.010UF	K	
C39,40			CK73FB1H102K	CHIP C	1000PF	K	
C41			C90-2045-05	ELECTRO	2.2UF	25WV	
C42			CK73FB1H103K	CHIP C	0.010UF	K	
C44			CK73GB1H102K	CHIP C	1000PF	K	
C45			CC73FCH1H121J	CHIP C	120PF	J	
C46			CK73GB1H102K	CHIP C	1000PF	K	
C50			CK73GB1H102K	CHIP C	1000PF	K	

Ref. No.	Address	New parts	Parts No.	Description			Destination
C52			CE04EW1C470M	ELECTRO	47UF	16WV	
C53			CK73GB1E223K	CHIP C	0.022UF	K	
C54			CQ92M1H154K	MYLAR	0.15UF	K	
C55			CK73FB1H102K	CHIP C	1000PF	K	
C56			CE04EW1C101M	ELECTRO	100UF	16WV	
C57			CC73ECH1H202J	CHIP C	2000PF	J	
C58			CK73FB1H103K	CHIP C	0.010UF	K	
C59			CC73GCH1H680J	CHIP C	68PF	J	
C60			CC73GCH1H180J	CHIP C	18PF	J	
C61			CC73GCH1H060D	CHIP C	6.0PF	D	
C62			CC73GCH1H470J	CHIP C	47PF	J	
C63			CK73GB1H103K	CHIP C	0.010UF	K	
C64			CE04EW1C101M	ELECTRO	100UF	16WV	
C65,66			CK73GB1H102K	CHIP C	1000PF	K	
C67			CE04EW1C470M	ELECTRO	47UF	16WV	
C68,69			CK73GB1H102K	CHIP C	1000PF	K	
C100			CE04EW1C100M	ELECTRO	10UF	16WV	
C101			CK73FF1E104Z	CHIP C	0.10UF	Z	
C103			CE04EW1H010M	ELECTRO	1.0UF	50WV	
C104			CE04EW1C100M	ELECTRO	10UF	16WV	
C105			CK73GB1H102K	CHIP C	1000PF	K	
C106			CC73FCH1H102J	CHIP C	1000PF	J	
C107			CK73FF1E104Z	CHIP C	0.10UF	Z	
C108			CE04EW1C100M	ELECTRO	10UF	16WV	
C109			CK73FF1E104Z	CHIP C	0.10UF	Z	
C112			CC73FCH1H102J	CHIP C	1000PF	J	
C113,114			CQ92FM1H223K	MYLAR	0.022UF	K	
C116			CC73FCH1H102J	CHIP C	1000PF	J	
C118,119			CC73GCH1H271J	CHIP C	270PF	J	
C120			CE04EW1C100M	ELECTRO	10UF	16WV	
C121			CE04EW1H010M	ELECTRO	1.0UF	50WV	
C122			CC73FSL1H152J	CHIP C	1500PF	J	
C123			CC73GCH1H101J	CHIP C	100PF	J	
C124			CC73GCH1H221J	CHIP C	220PF	J	
C125			CK73GB1E223K	CHIP C	0.022UF	K	
C126			CE04EW1C100M	ELECTRO	10UF	16WV	
C127			CK73GB1H103K	CHIP C	0.010UF	K	
C128			CC73FSL1H221J	CHIP C	220PF	J	
C129			CC73FCH1H101J	CHIP C	100PF	J	
C130			CE04EW1C100M	ELECTRO	10UF	16WV	
C131			CK73FF1E104Z	CHIP C	0.10UF	Z	
C132			CE04EW1C100M	ELECTRO	10UF	16WV	
C133			CC73GCH1H101J	CHIP C	100PF	J	
C134			CK73GB1E223K	CHIP C	0.022UF	K	
C135			CE04EW1C100M	ELECTRO	10UF	16WV	
C136			CK73GB1E223K	CHIP C	0.022UF	K	
C137			CC73FCH1H102J	CHIP C	1000PF	J	
C138			CC73GCH1H221J	CHIP C	220PF	J	
C139			CC73GCH1H271J	CHIP C	270PF	J	
C140,141			CK73GB1E223K	CHIP C	0.022UF	K	
C142			CE04EW1C100M	ELECTRO	10UF	16WV	
C143			CK73GB1E223K	CHIP C	0.022UF	K	
C144		*	CQ92FM1H683K	MYLAR	0.068UF	K	
C145			CK73FB1E104K	CHIP C	0.10UF	K	
C146,147			CC73FCH1H102J	CHIP C	1000PF	J	
C150			CK73GB1E223K	CHIP C	0.022UF	K	
C151			CE04EW1C100M	ELECTRO	10UF	16WV	
C152			CC73FCH1H102J	CHIP C	1000PF	J	
C153			CC73GCH1H271J	CHIP C	270PF	J	

PARTS LIST

TX-RX UNIT (X57-4620-00)

Ref. No.	Address	New parts	Parts No.	Description			Destination
C154			CK73GB1E223K	CHIP C	0.022UF	K	
C155			CE04EW1C100M	ELECTRO	10UF	16WV	
C156			CK73FF1E104Z	CHIP C	0.10UF	Z	
C157			CK73GB1E223K	CHIP C	0.022UF	K	
C158			C90-2045-05	ELECTRO	2.2UF	25WV	
C159,160			CK73FF1E104Z	CHIP C	0.10UF	Z	
C161			CK73GB1E223K	CHIP C	0.022UF	K	
C162			CE04EW1C100M	ELECTRO	10UF	16WV	
C163			CK73FF1E104Z	CHIP C	0.10UF	Z	
C164			CE04EW1C100M	ELECTRO	10UF	16WV	
C165			CK73FF1E104Z	CHIP C	0.10UF	Z	
C166,167			CE04EW1C100M	ELECTRO	10UF	16WV	
C168,169			CK73FF1E104Z	CHIP C	0.10UF	Z	
C170			CK73GB1H103K	CHIP C	0.010UF	K	
C171-176			CE04EW1C100M	ELECTRO	10UF	16WV	
C177			CQ92M1H103K	MYLAR	0.010UF	K	
C178,179			CC73FSL1H152J	CHIP C	1500PF	J	
C180,181			CC73ECH1H202J	CHIP C	2000PF	J	
C182			CC73GCH1H331J	CHIP C	330PF	J	
C183-185			CC73FSL1H152J	CHIP C	1500PF	J	
C186			CE04EW1C100M	ELECTRO	10UF	16WV	
C187			CC73GCH1H331J	CHIP C	330PF	J	
C188			CK73GB1H562K	CHIP C	5600PF	K	
C189			CE04EW1C100M	ELECTRO	10UF	16WV	
C190			CC73GCH1H331J	CHIP C	330PF	J	
C191,192			CE04NW1C100M	ELECTRO	10UF	16WV	
C193			CK73GB1H103K	CHIP C	0.010UF	K	
C194			CE04NW1C100M	ELECTRO	10UF	16WV	
C195			CE04EW1H010M	ELECTRO	1.0UF	50WV	
C196,197			CE04NW1C100M	ELECTRO	10UF	16WV	
C198			CE04EW1C100M	ELECTRO	10UF	16WV	
C199,200			CE04NW1C220M	ELECTRO	22UF	16WV	
C201,202			CK73GF1E104Z	CHIP C	0.10UF	Z	
C203,204			CE04NW1E4R7M	ELECTRO	4.7UF	25WV	
C205			CE04EW1C100M	ELECTRO	10UF	16WV	
C206,207			CK73GF1E104Z	CHIP C	0.10UF	Z	
C208			CK73GB1E223K	CHIP C	0.022UF	K	
C209,210			CE04NW1C100M	ELECTRO	10UF	16WV	
C212,213			CE04NW1H010M	ELECTRO	1.0UF	50WV	
C214			CK73GB1H472K	CHIP C	4700PF	K	
C215,216			CE04EW1C100M	ELECTRO	10UF	16WV	
C218,219			CK73EF1E474Z	CHIP C	0.47UF	Z	
C221,222			CK73FB1H102K	CHIP C	1000PF	K	
C223			CE04EW1C471M	ELECTRO	470UF	16WV	
C224			CE04EW1C100M	ELECTRO	10UF	16WV	
C225			CE04EW1C470M	ELECTRO	47UF	16WV	
C226			CE04EW1C101M	ELECTRO	100UF	16WV	
C227			CE04EW1C100M	ELECTRO	10UF	16WV	
C228			CE04EW1C101M	ELECTRO	100UF	16WV	
C229			CE04EW1C100M	ELECTRO	10UF	16WV	
C230			CE04EW1C471M	ELECTRO	470UF	16WV	
C231,232			CK73EF1E474Z	CHIP C	0.47UF	Z	
C233			CQ92M1H154K	MYLAR	0.15UF	K	
C235,236			CK73FB1H102K	CHIP C	1000PF	K	
C237			CE04EW1E471M	ELECTRO	470UF	25WV	
C240			CC73FSL1H152J	CHIP C	1500PF	J	
C241			CE04EW1H010M	ELECTRO	1.0UF	50WV	
C300,301			CC73FCH1H101J	CHIP C	100PF	J	
C302			CC73GCH1H101J	CHIP C	100PF	J	

Ref. No.	Address	New parts	Parts No.	Description			Destination
C303,304			CC73FCH1H101J	CHIP C	100PF	J	
C305			CC73GCH1H101J	CHIP C	100PF	J	
C306,307			CC73FCH1H101J	CHIP C	100PF	J	
C308			CC73GCH1H101J	CHIP C	100PF	J	
C309,310			CC73FCH1H101J	CHIP C	100PF	J	
C312,313			CC73FCH1H101J	CHIP C	100PF	J	
C314			CC73GCH1H101J	CHIP C	100PF	J	
C315			CC73FCH1H101J	CHIP C	100PF	J	
C316-320			CK73FB1H102K	CHIP C	1000PF	K	
C321			CC73FSL1H471J	CHIP C	470PF	J	
C326,327			CK73GB1H102K	CHIP C	1000PF	K	
C330-333			CK73FB1H102K	CHIP C	1000PF	K	
C334			CK73GB1E223K	CHIP C	0.022UF	K	
C335			CC73GCH1H331J	CHIP C	330PF	J	
C336-340			CK73GB1E223K	CHIP C	0.022UF	K	
C341			CK73FF1E104Z	CHIP C	0.10UF	Z	
C342			CC73FSL1H152J	CHIP C	1500PF	J	
C343			CK73FB1H562K	CHIP C	5600PF	K	
C344			CK73GB1H472K	CHIP C	4700PF	K	
C345			CK73GB1E223K	CHIP C	0.022UF	K	
C346-348			CC73FCH1H101J	CHIP C	100PF	J	
C349,350			CK73FF1E104Z	CHIP C	0.10UF	Z	
C351			CK73GB1E223K	CHIP C	0.022UF	K	
C355			CE04NW1C100M	ELECTRO	10UF	16WV	
C356			CE04EW1HR47M	ELECTRO	0.47UF	50WV	
C357			CE04EW1C100M	ELECTRO	10UF	16WV	
C358-361			CK73FB1H103K	CHIP C	0.010UF	K	
C363			CK73GB1H103K	CHIP C	0.010UF	K	
C364			C90-2045-05	ELECTRO	2.2UF	25WV	
C365-375			CK73FB1H471K	CHIP C	470PF	K	
C376			CK73GB1E223K	CHIP C	0.022UF	K	
C377-379			CK73FB1H471K	CHIP C	470PF	K	
C381,382			CK73FB1H103K	CHIP C	0.010UF	K	
C383			CK73GB1H102K	CHIP C	1000PF	K	
C384			CK73FB1H102K	CHIP C	1000PF	K	
C385			CK73GB1H103K	CHIP C	0.010UF	K	
C386			CK73FB1H103K	CHIP C	0.010UF	K	
C387			CK73GB1H103K	CHIP C	0.010UF	K	
C388			CK73FB1H471K	CHIP C	470PF	K	
C389,390			CK73GB1H471K	CHIP C	470PF	K	
C391-394			CK73FB1H103K	CHIP C	0.010UF	K	
C395			CK73GB1H103K	CHIP C	0.010UF	K	
C400			CC73FSL1H471J	CHIP C	470PF	J	
C401			CK73FB1H103K	CHIP C	0.010UF	K	
C402			C90-2167-05	ELECTRO	100UF	16WV	
CN1			E40-3239-05	PIN CONNECTOR (4P)			
CN3			E40-3239-05	PIN CONNECTOR (4P)			
CN4			E40-3242-05	PIN CONNECTOR (7P)			
CN5		*	E40-5747-05	PIN CONNECTOR (11P)			
CN6			E40-3243-05	PIN CONNECTOR (8P)			
CN7			E40-5736-05	FLAT CABLE CONNECTOR (26P)			
CN8		*	E40-5740-05	FLAT CABLE CONNECTOR (20P)			
CN9			E40-3240-05	PIN CONNECTOR (5P)			
CN10			E40-3238-05	PIN CONNECTOR (3P)			
CN11		*	E40-5741-05	FLAT CABLE CONNECTOR (8P)			
CN12			E40-3237-05	PIN CONNECTOR (2P)			
CN13			E04-0191-05	RF COAXIAL CABLE SOCKET			
CN14-16			E02-2015-05	SOCKET FOR IC			
CN17			E40-5067-05	PIN CONNECTOR (10P)			

PARTS LSIT

TX-RX UNIT (X57-4620-00)

Ref. No.	Address	New parts	Parts No.	Description	Destination
J1			E11-0455-05	PHONE JACK (3.5D)	
J2			E11-0431-05	PHONE JACK	
J4			E63-0401-05	PHONO JACK	
J5			E06-1352-05	DIN SOCKET	
J6			E11-0455-05	PHONE JACK (3.5D)	
J7		*	E58-0428-05	SUB PLUG (D) 9P	
W1		*	E37-0536-05	LEAD WIRE WITH MINIPIN PLUG	
A1	4G	*	F01-1005-04	HEAT SINK	
A2	4F		F11-1127-04	SHIELDING CASE	
A3,4	4G		G02-0574-04	FLAT SPRING	
A5	4G		G02-0719-04	FLAT SPRING	
CF1,2			L72-0374-05	CERAMIC FILTER (455KHZ)	
CF3			L72-0366-05	CERAMIC FILTER (455KHZ)	
L1			L40-2285-48	SMALL FIXED INDUCTOR (220NH)	
L2			L40-4785-48	SMALL FIXED INDUCTOR	
L3			L40-1011-15	SMALL FIXED INDUCTOR	
L4		*	L34-4397-05	COIL	
L5			L40-1011-15	SMALL FIXED INDUCTOR	
L8		*	L40-4711-15	SMALL FIXED INDUCTOR	
L9			L40-1011-15	SMALL FIXED INDUCTOR	
L10			L40-1092-12	SMALL FIXED INDUCTOR	
L11-17			L40-1011-15	SMALL FIXED INDUCTOR	
L18			L40-1001-15	SMALL FIXED INDUCTOR	
L19,20		*	L39-1245-05	COIL	
L21		*	L40-2711-33	SMALL FIXED INDUCTOR	
L22,23			L40-2201-12	SMALL FIXED INDUCTOR	
L24,25			L40-1092-12	SMALL FIXED INDUCTOR	
L26			L40-1001-15	SMALL FIXED INDUCTOR	
R1			RK73FB2A103J	CHIP R 10K J 1/10W	
R2,3			RK73GB1J103J	CHIP R 10K J 1/16W	
R4-6			RK73GB1J101J	CHIP R 100 J 1/16W	
R7			RK73FB2A103J	CHIP R 10K J 1/10W	
R8			RK73GB1J682J	CHIP R 6.8K J 1/16W	
R9			RK73GB1J222J	CHIP R 2.2K J 1/16W	
R10			RK73GB1J330J	CHIP R 33 J 1/16W	
R11			RK73GB1J183J	CHIP R 18K J 1/16W	
R12			RK73FB2A103J	CHIP R 10K J 1/10W	
R13			RK73GB1J101J	CHIP R 100 J 1/16W	
R16			RK73GB1J680J	CHIP R 68 J 1/16W	
R17,18			RK73FB2A222J	CHIP R 2.2K J 1/10W	
R19			RK73GB1J101J	CHIP R 100 J 1/16W	
R21-24			RK73FB2A103J	CHIP R 10K J 1/10W	
R50			RK73GB1J682J	CHIP R 6.8K J 1/16W	
R51			RK73FB2A104J	CHIP R 100K J 1/10W	
R52			RK73GB1J392J	CHIP R 3.9K J 1/16W	
R53			RK73GB1J221J	CHIP R 220 J 1/16W	
R54			RK73GB1J152J	CHIP R 1.5K J 1/16W	
R55,56			RK73GB1J103J	CHIP R 10K J 1/16W	
R57			RK73GB1J334J	CHIP R 330K J 1/16W	
R58			RK73GB1J470J	CHIP R 47 J 1/16W	
R59			RK73GB1J151J	CHIP R 150 J 1/16W	
R60			RK73GB1J152J	CHIP R 1.5K J 1/16W	
R61			RK73GB1J333J	CHIP R 33K J 1/16W	
R62			RK73GB1J223J	CHIP R 22K J 1/16W	
R63			RK73GB1J102J	CHIP R 1.0K J 1/16W	
R64,65			RK73GB1J470J	CHIP R 47 J 1/16W	
R66			RK73GB1J221J	CHIP R 220 J 1/16W	

Ref. No.	Address	New parts	Parts No.	Description	Destination
R100			RK73FB2A100J	CHIP R 10 J 1/10W	
R101			RK73GB1J472J	CHIP R 4.7K J 1/16W	
R103			RK73GB1J102J	CHIP R 1.0K J 1/16W	
R104			RK73GB1J472J	CHIP R 4.7K J 1/16W	
R105			RK73GB1J102J	CHIP R 1.0K J 1/16W	
R106			RK73GB1J154J	CHIP R 150K J 1/16W	
R109			RK73GB1J102J	CHIP R 1.0K J 1/16W	
R110			RK73GB1J223J	CHIP R 22K J 1/16W	
R111			RK73GB1J222J	CHIP R 2.2K J 1/16W	
R113			RK73GB1J104J	CHIP R 100K J 1/16W	
R114			RK73GB1J472J	CHIP R 4.7K J 1/16W	
R117			RK73GB1J823J	CHIP R 82K J 1/16W	
R118			RK73GB1J222J	CHIP R 2.2K J 1/16W	
R119,120			RK73GB1J223J	CHIP R 22K J 1/16W	
R121,122			RK73GB1J123J	CHIP R 12K J 1/16W	
R123			RK73GB1J223J	CHIP R 22K J 1/16W	
R124			RK73GB1J103J	CHIP R 10K J 1/16W	
R126			RK73GB1J183J	CHIP R 18K J 1/16W	
R127,128			RK73GB1J103J	CHIP R 10K J 1/16W	
R129			RK73GB1J472J	CHIP R 4.7K J 1/16W	
R130			RK73GB1J223J	CHIP R 22K J 1/16W	
R131			RK73GB1J101J	CHIP R 100 J 1/16W	
R132			RK73GB1J472J	CHIP R 4.7K J 1/16W	
R133			RK73GB1J103J	CHIP R 10K J 1/16W	
R134,135			RK73GB1J152J	CHIP R 1.5K J 1/16W	
R136			RK73GB1J331J	CHIP R 330 J 1/16W	
R137			RK73FB2A102J	CHIP R 1.0K J 1/10W	
R138			RK73GB1J152J	CHIP R 1.5K J 1/16W	
R139			RK73GB1J223J	CHIP R 22K J 1/16W	
R140			RK73GB1J470J	CHIP R 47 J 1/16W	
R141			RK73GB1J392J	CHIP R 3.9K J 1/16W	
R142,143			RK73GB1J222J	CHIP R 2.2K J 1/16W	
R144			RK73GB1J101J	CHIP R 100 J 1/16W	
R145			RK73GB1J472J	CHIP R 4.7K J 1/16W	
R146,147			RK73GB1J101J	CHIP R 100 J 1/16W	
R148			RK73GB1J471J	CHIP R 470 J 1/16W	
R149			RK73GB1J101J	CHIP R 100 J 1/16W	
R150			RK73GB1J471J	CHIP R 470 J 1/16W	
R151			RK73GB1J472J	CHIP R 4.7K J 1/16W	
R152			RK73GB1J152J	CHIP R 1.5K J 1/16W	
R153,154			RK73GB1J331J	CHIP R 330 J 1/16W	
R155			RK73GB1J222J	CHIP R 2.2K J 1/16W	
R156			RK73GB1J332J	CHIP R 3.3K J 1/16W	
R157			RK73GB1J222J	CHIP R 2.2K J 1/16W	
R158,159			RK73GB1J472J	CHIP R 4.7K J 1/16W	
R160			RK73GB1J103J	CHIP R 10K J 1/16W	
R161			RK73GB1J222J	CHIP R 2.2K J 1/16W	
R162,163			RK73GB1J331J	CHIP R 330 J 1/16W	
R164			RK73GB1J222J	CHIP R 2.2K J 1/16W	
R165			RK73GB1J331J	CHIP R 330 J 1/16W	
R166			RK73GB1J392J	CHIP R 3.9K J 1/16W	
R167			RK73GB1J472J	CHIP R 4.7K J 1/16W	
R168			RK73GB1J100J	CHIP R 10 J 1/16W	
R169			RK73GB1J471J	CHIP R 470 J 1/16W	
R170			RK73GB1J101J	CHIP R 100 J 1/16W	
R171,172			RK73FB2A100J	CHIP R 10 J 1/10W	
R173			RK73GB1J101J	CHIP R 100 J 1/16W	
R174			RK73GB1J123J	CHIP R 12K J 1/16W	
R175			RK73FB2A123J	CHIP R 12K J 1/10W	

PARTS LIST

TX-RX UNIT (X57-4620-00)

Ref. No.	Address	New parts	Parts No.	Description	Destination
R176			RK73FB2A183J	CHIP R 18K J 1/10W	
R177			RK73GB1J183J	CHIP R 18K J 1/16W	
R178			RK73FB2A153J	CHIP R 15K J 1/10W	
R179			RK73GB1J103J	CHIP R 10K J 1/16W	
R180			RK73GB1J821J	CHIP R 820 J 1/16W	
R181			RK73GB1J222J	CHIP R 2.2K J 1/16W	
R182			RK73GB1J103J	CHIP R 10K J 1/16W	
R183			RK73FB2A153J	CHIP R 15K J 1/10W	
R184			RK73GB1J272J	CHIP R 2.7K J 1/16W	
R185			RK73GB1J153J	CHIP R 15K J 1/16W	
R186			RK73FB2A222J	CHIP R 2.2K J 1/10W	
R187			RK73GB1J223J	CHIP R 22K J 1/16W	
R188			RK73GB1J101J	CHIP R 100 J 1/16W	
R189,190			RK73GB1J153J	CHIP R 15K J 1/16W	
R191,192			RK73GB1J222J	CHIP R 2.2K J 1/16W	
R193,194			RK73GB1J223J	CHIP R 22K J 1/16W	
R196			RK73FB2A472J	CHIP R 4.7K J 1/10W	
R197			RK73GB1J103J	CHIP R 10K J 1/16W	
R198,199			RK73GB1J104J	CHIP R 100K J 1/16W	
R200			RK73FB2A101J	CHIP R 100 J 1/10W	
R201			RK73GB1J221J	CHIP R 220 J 1/16W	
R202,203			RK73GB1J104J	CHIP R 100K J 1/16W	
R204			RK73GB1J222J	CHIP R 2.2K J 1/16W	
R205			RK73GB1J272J	CHIP R 2.7K J 1/16W	
R206			RK73GB1J224J	CHIP R 220K J 1/16W	
R207			RK73GB1J222J	CHIP R 2.2K J 1/16W	
R208			RK73GB1J123J	CHIP R 12K J 1/16W	
R209			RK73GB1J563J	CHIP R 56K J 1/16W	
R215			RK73GB1J681J	CHIP R 680 J 1/16W	
R220			RK73GB1J103J	CHIP R 10K J 1/16W	
R300			RK73FB2A100J	CHIP R 10 J 1/10W	
R301			RK73GB1J101J	CHIP R 100 J 1/16W	
R303-319			RK73GB1J101J	CHIP R 100 J 1/16W	
R320			RK73GB1J102J	CHIP R 1.0K J 1/16W	
R323			RK73GB1J101J	CHIP R 100 J 1/16W	
R325			RK73FB2A473J	CHIP R 47K J 1/10W	
R330			RK73GB1J470J	CHIP R 47 J 1/16W	
R331			RK73GB1J102J	CHIP R 1.0K J 1/16W	
R332			RK73GB1J222J	CHIP R 2.2K J 1/16W	
R334			RK73GB1J331J	CHIP R 330 J 1/16W	
R335			RK73GB1J101J	CHIP R 100 J 1/16W	
R336			RK73GB1J102J	CHIP R 1.0K J 1/16W	
R337,338			RK73GB1J124J	CHIP R 120K J 1/16W	
R339,340			RK73GB1J334J	CHIP R 330K J 1/16W	
R343			RK73GB1J471J	CHIP R 470 J 1/16W	
R344			RK73FB2A2R2J	CHIP R 2.2 J 1/10W	
R345-347	—		RK73GB1J101J	CHIP R 100 J 1/16W	
R348,349			RK73GB1J473J	CHIP R 47K J 1/16W	
R350,351			RK73FB2A473J	CHIP R 47K J 1/10W	
R352-354			RK73GB1J473J	CHIP R 47K J 1/16W	
R355			RK73GB1J103J	CHIP R 10K J 1/16W	
R356			RK73GB1J473J	CHIP R 47K J 1/16W	
R357			RK73GB1J103J	CHIP R 10K J 1/16W	
R358			RK73GB1J473J	CHIP R 47K J 1/16W	
R359			RK73GB1J101J	CHIP R 100 J 1/16W	
R364,365			RK73GB1J222J	CHIP R 2.2K J 1/16W	
R366			R92-1252-05	CHIP R 0 OHM	
R367,368			RK73FB2A473J	CHIP R 47K J 1/10W	
R369			RK73GB1J473J	CHIP R 47K J 1/16W	

Ref. No.	Address	New parts	Parts No.	Description	Destination
R371-374			RK73GB1J473J	CHIP R 47K J 1/16W	
R376			RK73GB1J473J	CHIP R 47K J 1/16W	
R377,378			RK73FB2A473J	CHIP R 47K J 1/10W	
R379			RK73GB1J473J	CHIP R 47K J 1/16W	
R380-418			RK73FB2A103J	CHIP R 10K J 1/10W	
R419-428			RK73GB1J101J	CHIP R 100 J 1/16W	
R429			RK73FB2A103J	CHIP R 10K J 1/10W	
R430			RK73GB1J472J	CHIP R 4.7K J 1/16W	
R431,432			RK73GB1J103J	CHIP R 10K J 1/16W	
R433			RK73GB1J102J	CHIP R 1.0K J 1/16W	
R434			RK73GB1J470J	CHIP R 47 J 1/16W	
R435,436			RK73GB1J472J	CHIP R 4.7K J 1/16W	
VR1,2			R12-6732-05	TRIMMING POT. 470	
VR3			R12-6742-05	TRIMMING POT. 22K	
D1-4			RLS73	DIODE	
D5			1SV166	DIODE	
D7			DAP202K	DIODE	
D8			RLS73	DIODE	
IC1,2		*	DSP56002FC40	IC	
IC3		*	MBCG24173-6173	IC (GATE ARRAY)	
IC4		*	27C256PCJJTC-K	IC	
IC5		*	27C256PCJJUC-K	IC	
IC6		*	27C256PCJJVC-K	IC	
IC7		*	MCM56824AFN20	IC	
IC7		*	MCM56824AFN25	IC	
IC9		*	7032LC44JLQA	IC	
IC15			MB86001PF	IC	
IC16			AK4318-VS	IC	
IC17			NJM2100M	IC (OP AMPLIFIER)	
IC18			MC74HC4053F	IC (ANALOG SW)	
IC19-21			NJM4560M	IC (OP AMP X2)	
IC22		*	AD822AR	IC	
IC23			MC74HC4052F	IC (HPF)	
IC24			NJM2100M	IC (OP AMPLIFIER)	
IC25			AK5340-VS	IC (AD CONVERTER (18 Bit))	
IC26			M62363FP	IC (8bit D/A CONVERTER)	
IC27			AK4318-VS	IC	
IC28			NJM2100M	IC (OP AMPLIFIER)	
IC29			M51131L	IC (ELECTRO VOLUME)	
IC30			NJM2100M	IC (OP AMPLIFIER)	
IC31			M51131L	IC (ELECTRO VOLUME)	
IC33			LA4422	IC (AF POWER AMP/ 5.8W)	
IC34			PCM69AU	IC (18bit D/A CONVERTOR)	
IC35		*	AD822AR	IC	
IC36			NJM4560M	IC (OP AMP X2)	
IC37,38			UPC7805H	IC (VOLTAGE REGULATOR/ +5V)	
IC39			NJM78L05UA	IC (VOLTAGE REGULATOR/ +5V)	
IC40			NJM78L08UA	IC (VOLTAGE REGULATOR/ +8V)	
IC41,42			NJM3404AM	IC (OP AMP X2)	
IC43			NJM5532M	IC (OP AMP)	
IC44			TC7S04F	IC (2CH NAND GATE)	
Q1			DTC124EK	DIGITAL TRANSISTOR	
Q2,3			2SC2714(Y)	TRANSISTOR	
Q4			DTC124EK	DIGITAL TRANSISTOR	
Q5-7			2SC3324(G)	TRANSISTOR	
Q8			2SK210(GR)	FET	
Q9,10			2SC2714(Y)	TRANSISTOR	
Q12			2SC2712(Y)	TRANSISTOR	
Q13-17			2SC2412K(S)	TRANSISTOR	

PARTS LSIT

TX-RX UNIT (X57-4620-00)
VCO2 (X58-3390-03)

Ref. No.	Address	New parts	Parts No.	Description	Destination
Q22			DTC124EK	DIGITAL TRANSISTOR	
Q23			2SC2712(Y)	TRANSISTOR	
Q25			DTA143EK	DIGITAL TRANSISTOR	
Q26			DTC124XK	DIGITAL TRANSISTOR	
Q27			DTC143EK	DIGITAL TRANSISTOR	
VCO2 (X58-3390-03)					
-			B42-2437-04	S/NO LABEL	
C1			CK73FB1H102K	CHIP C 1000PF K	
C2			CC73FSL1H101J	CHIP C 100PF J	
C3			CC73FCH1H070D	CHIP C 7.0PF D	
C4			CC73FCH1H070D	CHIP C 7.0PF D	
C4			CC73FCH1H220J	CHIP C 22PF J	
C6			CC73FCH1H180J	CHIP C 18PF J	
C7			CC73FCH1H120J	CHIP C 12PF J	
C8,9			CK73FB1H102K	CHIP C 1000PF K	
C10			CC73FCH1H010C	CHIP C 1.0PF C	
C11			CK73FB1H102K	CHIP C 1000PF K	
TC1			C05-0331-15	TRIMMER CAPACITOR 10PF	
TP1-3			E23-0464-05	TERMINAL	
-			F11-1085-04	SHIELDING CASE	
-			F11-1086-14	SHIELDING COVER	
			G13-0904-04	CUSHION (COVER)	
L1			L33-0690-05	CHOKE COIL (3.3UH)	
L2			L34-2353-05	COIL	
T	2F		N30-2604-41	PAN HEAD MACHIN SCREW	
R1			RK73FB2A682J	CHIP R 6.8K J 1/10W	
R2			RK73FB2A271J	CHIP R 270 J 1/10W	
R3			RK73FB2A330J	CHIP R 33 J 1/10W	
R4,5			RK73FB2A472J	CHIP R 4.7K J 1/10W	
R6			RK73FB2A471J	CHIP R 470 J 1/10W	
R7			RK73FB2A560J	CHIP R 56 J 1/10W	
D1			1SV164	DIODE	
Q1			2SK508NV(K52)	FET	
Q2			2SC2714(Y)	TRANSISTOR	

EXPLODED VIEW

H	M3 x 6 (F)	: N32-3006-46
I	M3 x 6 (OC)	: N33-3006-41
J	M2.6 x 6 (Br-Tap)	: N87-2606-46
K	M3 x 6 (Br-Tap)	: N87-3006-46
M	M2.6 x 8 (F-Tap)	: N88-2608-46
P	M3 x 10 (TP-T)	: N91-3010-46

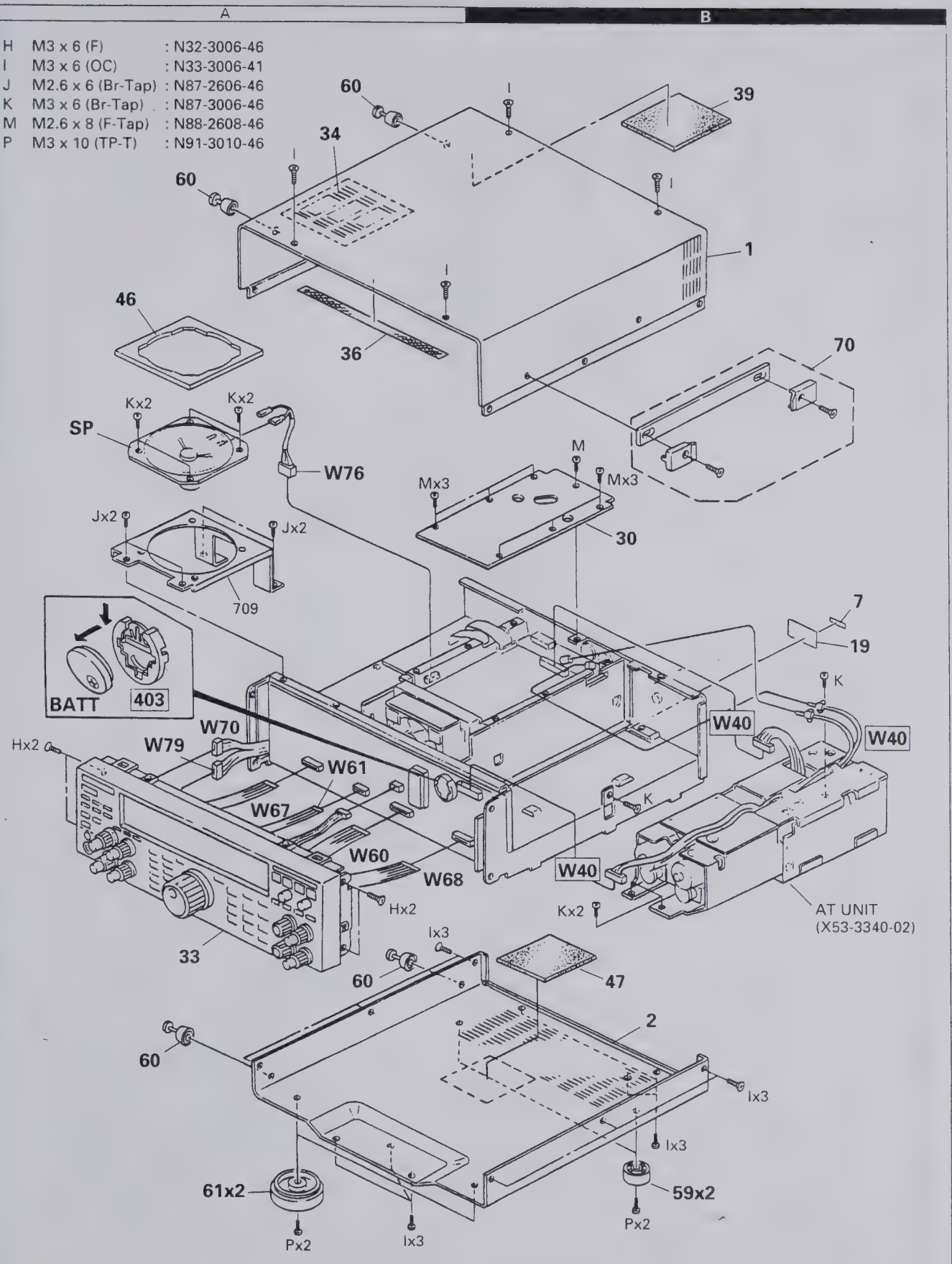

Parts with the exploded numbers larger than 700 are not supplied.

EXPLODED VIEW

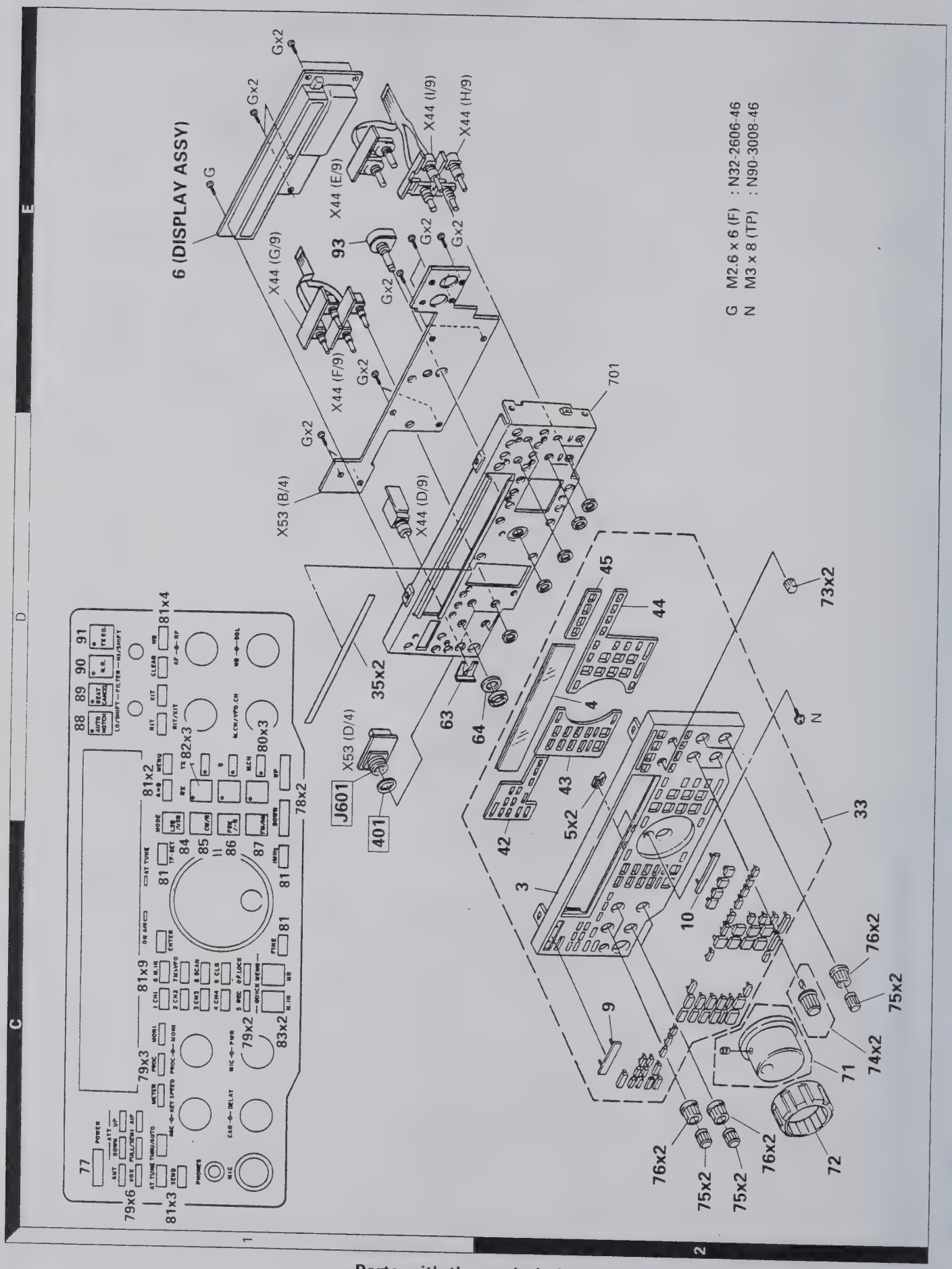

Parts with the exploded numbers larger than 700 are not supplied.

EXPLODED VIEW

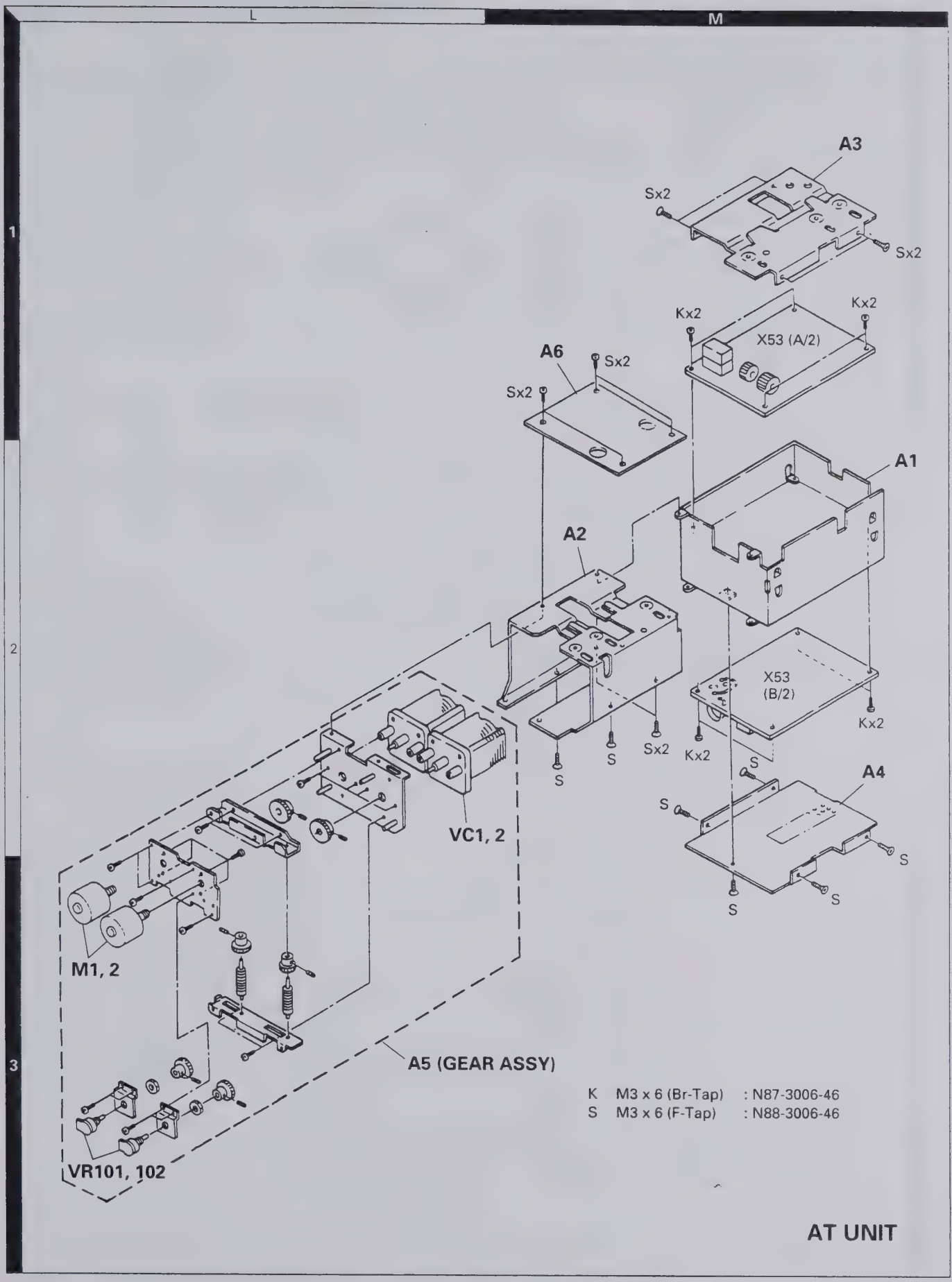

PACKING

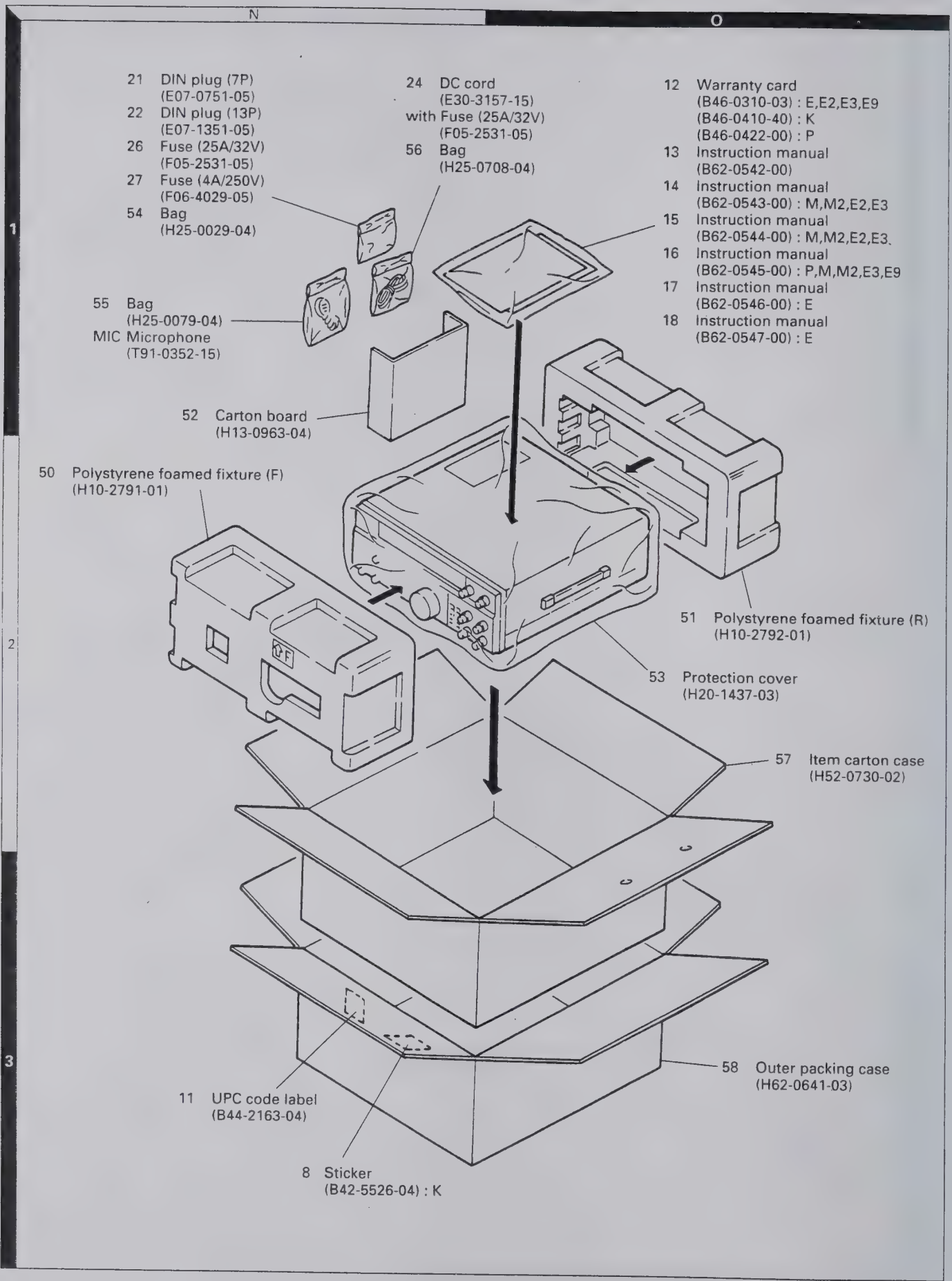
N
O
1
2
3
21 DIN plug (7P)
(E07-0751-05)
22 DIN plug (13P)
(E07-1351-05)
26 Fuse (25A/32V)
(F05-2531-05)
27 Fuse (4A/250V)
(F06-4029-05)
54 Bag
(H25-0029-04)
24 DC cord
(E30-3157-15)
with Fuse (25A/32V)
(F05-2531-05)
56 Bag
(H25-0708-04)
12 Warranty card
(B46-0310-03) : E,E2,E3,E9
(B46-0410-40) : K
(B46-0422-00) : P
13 Instruction manual
(B62-0542-00)
14 Instruction manual
(B62-0543-00) : M,M2,E2,E3
15 Instruction manual
(B62-0544-00) : M,M2,E2,E3
16 Instruction manual
(B62-0545-00) : P,M,M2,E3,E9
17 Instruction manual
(B62-0546-00) : E
18 Instruction manual
(B62-0547-00) : E
55 Bag
(H25-0079-04)
MIC Microphone
(T91-0352-15)
52 Carton board
(H13-0963-04)
50 Polystyrene foamed fixture (F)
(H10-2791-01)
51 Polystyrene foamed fixture (R)
(H10-2792-01)
53 Protection cover
(H20-1437-03)
57 Item carton case
(H52-0730-02)
58 Outer packing case
(H62-0641-03)
11 UPC code label
(B44-2163-04)
8 Sticker
(B42-5526-04) : K

ADJUSTMENT

Required Test Equipment

1. DC Voltmeter (DC V.M)
1) Input resistance : More than 1MΩ
2) Voltage range : 1.5 to 1000V AC/DC
Note : A high-recision multimeter may be used. However, accurate readings can not be obtained for high-impedance circuits.

2. DC Ammeter
1) Current range : 100mA, 1.5A, 15A, high-precision ammeter may be used.

3. RF VTVM (RF V.M)
1) Input impedance : 1MΩ and less than 3pF, min.
2) Voltage range : 10mV to 300V
3) Frequency range : 10kHz to 500MHz

4. AF Voltmeter (AF V.M)
1) Frequency range : 50Hz to 10kHz
2) Input resistance : 1MΩ or greater
3) Voltage range : 10mV to 30V

5. AF Generator (AG)
1) Frequency range : 200Hz to 5kHz
2) Output : 1mV or less to 1V, low distortion

6. AF Dummy Load (DM. SP)
1) Impedance : 8Ω
2) Dissipation : 3W or greater

7. Oscilloscope
Requires high sensitivity, and external synchronization capability (150MHz or greater).

8. Sweep Generator (Sweep G.)
1) Center frequency : 50kHz to 90MHz
2) Frequency deviation : Maximum ±35kHz
3) Output voltage : 100mV or greater

9. Standard Signal Generator (SSG)
1) Frequency range : 50kHz to 50MHz
2) Output : –133dBm/0.05μV to 7dBm/500mV
3) Output impedance : 50Ω
4) AM and FM modulation can be possible
Note : Generator must be frequency stable.

10. Frequency Counter (f. counter)
1) Minimum input voltage : 50mV
2) Frequency range : 150MHz or greater

11. Noise Generator (Noise G.)
Must generate ignition noise containing harmonics beyond 30MHz.

12. RF Dummy Load
1) Impedance : 150Ω and 50Ω
2) Dissipation : 150W or greater

13. Linear Detector
1) Frequency range : 30MHz

14. Power Meter
1) Impedance : 50Ω
2) Dissipation : 300W continuous or greater
3) Frequency limits : 60MHz or greater

15. Spectrum Analyzer
1) Frequency range : 100kHz to 110MHz or greater
2) Bandwidth : 1kHz to 3MHz

16. Detector
1) For adjustment of BPF

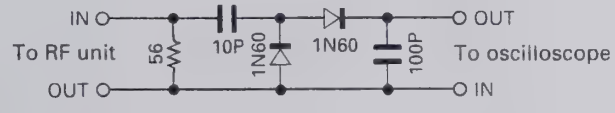

2) For adjustment of PLL/VCO BPF

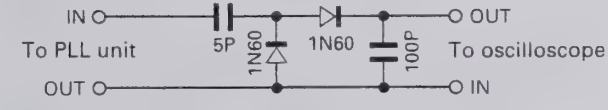

17. Directional Coupler

18. Monitor Receiver
R-1000 class

19. Microphone
MC-43S or MC-60S8

20. Tracking Generator

21. Distortion Meter

22. Double Signal Pad (50Ω)

ADJUSTMENT

Preparation

Unless otherwise specified, knobs and switches should be set as follows.

POWER	ON	PROCESSOR	Center
ATT	0	MIC	Center
AGC	Center	PWR	MAX
NB LEVEL	Center	CAR	Center
SQL	0		
AF	0		
RF	MAX		

Front Panel

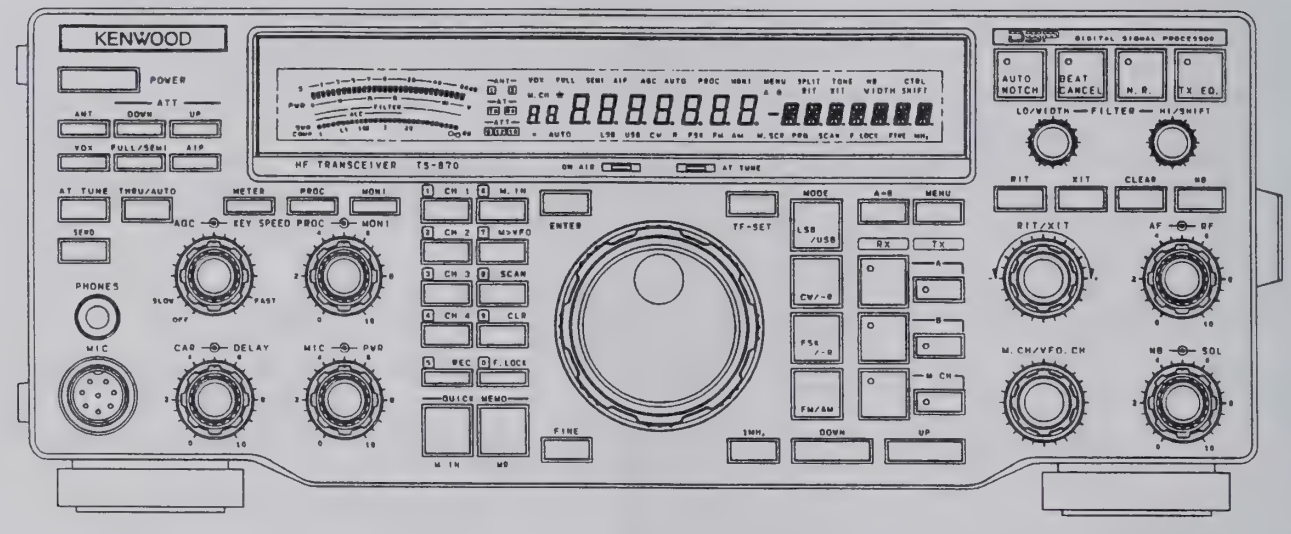

Rear Panel

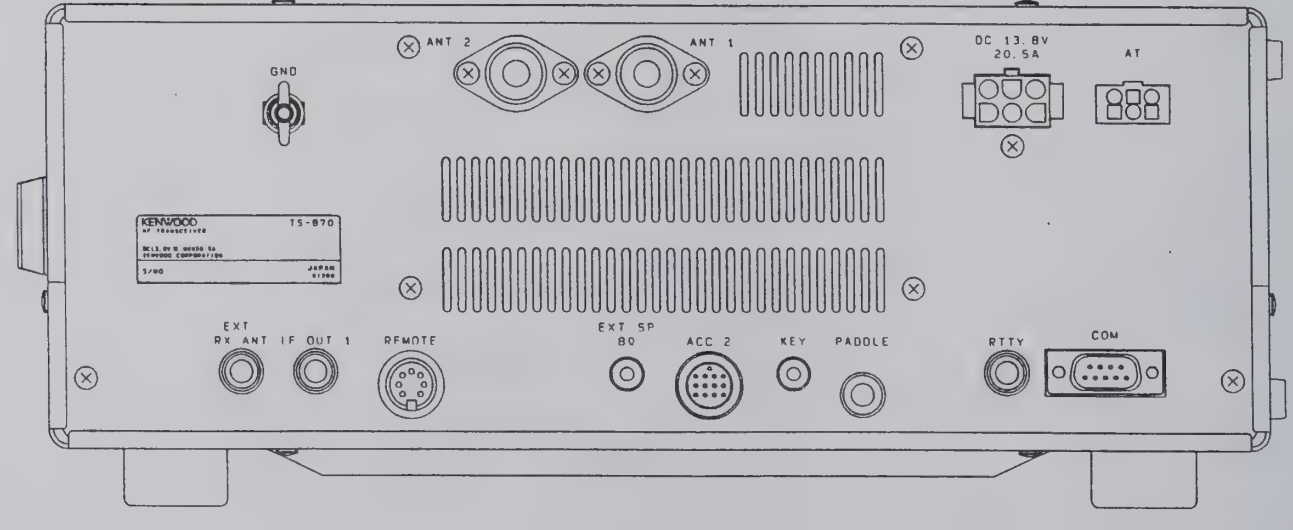

ADJUSTMENT

Service Jig

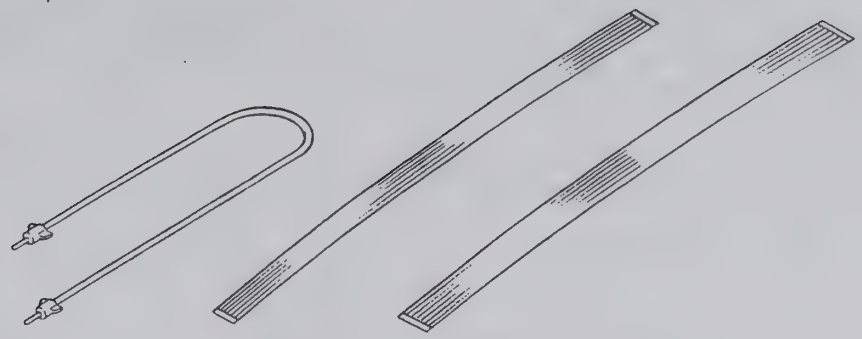

A. Lead wire with minipin plug
(E37-0064-05)
About 27cm

B . Flat cable (8P)
(E37-0581-05)
About 25cm

C. Flat cable (12P)
(E37-0580-05)
About 25cm

How to Use

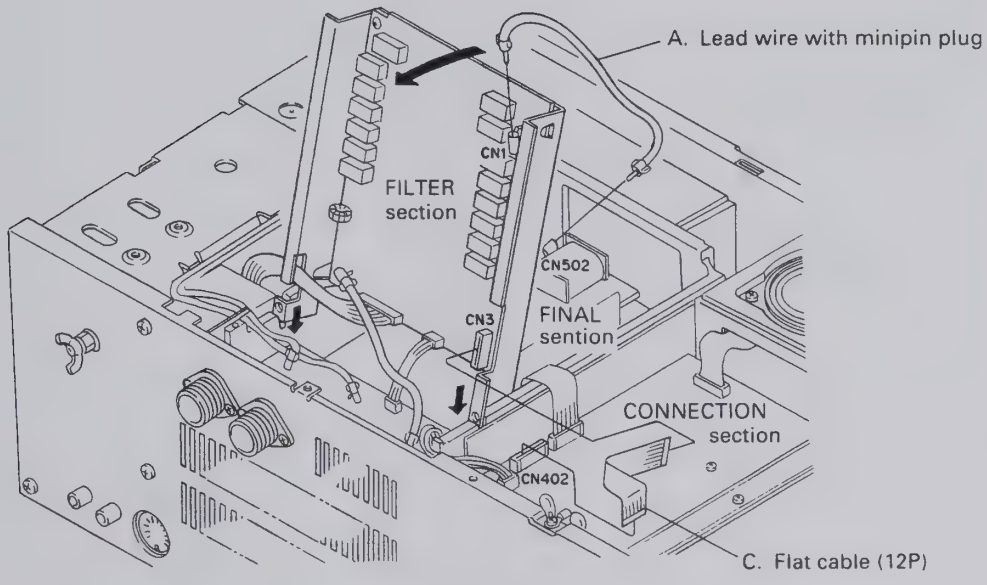

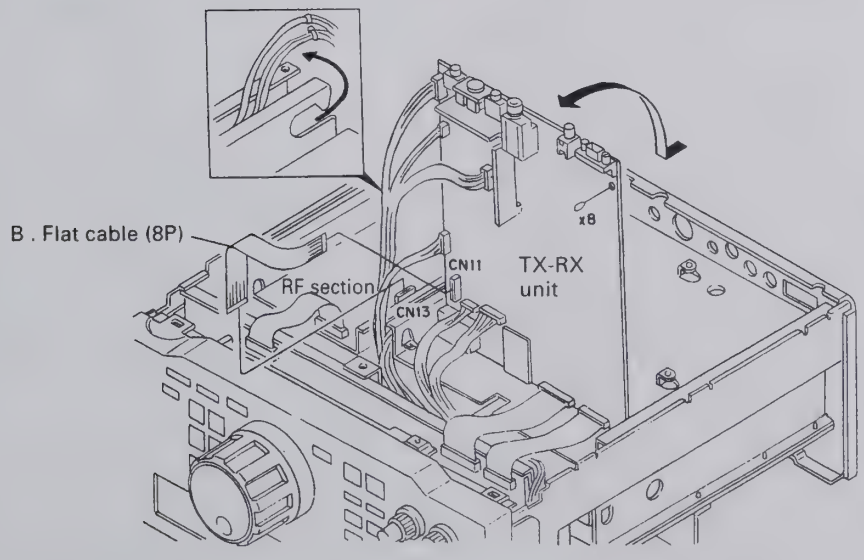

ADJUSTMENT

Service Adjustment Mode

■ Outline

- The TS-870S is adjusted by the normal method and by another method using the service adjustment mode.
- In the adjustment mode, there are 28 menu numbers A0 to BB. All adjustment data items are saved in the EEPROM.
- When the service adjustment mode is entered, data is read from the EEPROM and placed in the CPU RAM so that settings can be modified.
- The EEPROM is updated only when data is written in Menu No. BA.

  Note : Transmission is possible in reception-related adjustment modes.

■ Operation procedure

1. Adjustment mode start
   Hold down the [N.R.] key and [LSB/USB] key, and turn the [POWER] switch ON to enter the adjustment mode. The menu number will appear in M. CH on the display.
2. Adjustment mode menu number selection
   When the [M. CH/VFO. CH] control is turned, the menu number changes.
3. Adjustment mode data writing
   Press the [UP]/[DOWN] key or the microphone [UP]/[DOWN] key in MENU No. BA.
4. Adjustment mode cancel
   When the [CLR] key is pressed, the normal memory-channel display returns.

   Note : If the power is switched OFF in the adjustment mode, it is canceled.

Service Adjustment Mode Menu

Menu No.	Adjustment function	Description
A0	System	Checksum display (Program version confirmation)
A1	ALC	ALC reference voltage adjustment
A2	S-meter (SSB)	Start level setting
A3		S9 level setting
A4		Full-scale level setting
A5	Filter	8.83MHz IF filter center frequency correction
A6		455kHz IF filter center frequency correction
A7	Power adjustment	100W adjustment (With power meter curve)
A8		50W adjustment (With power meter curve)
A9		25W adjustment (With power meter curve)
AA		10W adjustment (With power meter curve)
AB	TX gain	1.9MHz band
AC		3.5MHz band
AD		7MHz band
AE		10MHz band
AF		14MHz band
B0		18MHz band
B1		21MHz band
B2		24.5MHz band
B3		29MHz band
B4	ALC meter	Stare level setting
B5		Maximum zone level setting
B6		Full-scale level setting
B7	SWR protection	Protection operation setting
B8	SWR meter	VSWR=3 level setting
B9	FM	FM deviation setting
BA	System	Writing into EEPROM
BB	Display	All LCD segments light (Not light ON AIR lamp)

ADJUSTMENT

Display Check

Item	Condition	Measurement			Adjustment			Specifications/Remarks
		Test-equipment	Unit	Terminal	Unit	Parts	Method	
1. All reset	1) DC IN : DC 13.8V Pushing [A=B] key down, [POWER] : ON.				Front panel	Display	After displaying HELLO, the display is reset as follows DISP f. : 14.000.00 MODE : USB METER : ALC ANT : 1 AGC	Display should be normal Should be at the reset frequency.
2. All LCD segments light	1) Menu No. : BB						Check	All LCD segments light.

PLL Section

Item	Condition	Measurement			Adjustment			Specifications/Remarks
		Test-equipment	Unit	Terminal	Unit	Parts	Method	
1. 20MHz frequency adj.	1) [POWER] : ON MODE : FM Receive	f. counter	PLL	CN510 (TP)	PLL	TC800	Frequency adjust.	20.000MHz ± 20Hz
2. 20MHz peak adj.	1) Display f. : 14.000MHz MODE : USB Receive	RF V.M		CN503		L528	MAX.	
3. 60MHz BPF adj.	1) MODE : FM Receive			IC506 2 pin		L529 L530	Repeat for MAX.	
4. 55MHz BPF adj. and frequency check	1) Display f. : 14.000MHz MODE : FM Receive			IC508 11 pin		L518 L519 L520	Repeat for MAX.	
	2) Display f. : 14.000MHz	f. counter					Frequency check	55.299~55.301MHz
5. Lock voltage adj. & check VCO1	1) Display f. : 30kHz	DC V.M		TP501	PLL	TC506	1.8V	1.8 ± 0.03V
	2) Display f. : 7.489MHz						Voltage check	4.5~7.0V
6. Lock voltage adj. & check VCO2	1) Display f. : 7.500MHz				PLL	TC507	1.8V	1.8 ± 0.03V
	2) Display f. : 14.489MHz						Voltage check	4.5~7.0V
7. Lock voltage adj. & check VCO3	1) Display f. : 14.490MHz				PLL	TC508	1.8V	1.8 ± 0.03V
	2) Display f. : 21.489MHz						Voltage check	4.5~7.0V
8. Lock voltage adj. & check VCO4	1) Display f. : 21.490MHz				PLL	TC509	1.8V	1.8 ± 0.03V
	2) Display f. : 30.000MHz						Voltage check	4.5~7.0V
9. Lock voltage adj. LO2A (VCO2) X58-3390-03	1) Display f. : 30.000MHz			TP502	VCO2 X58-3390	TC1	5.0V	5.0 ± 0.03V

ADJUSTMENT

Item	Condition	Measurement			Adjustment			Specifications/Remarks
		Test-equipment	Unit	Terminal	Unit	Parts	Method	
10. Output level check LO1 (CN504)	1) Display f. : 14.000MHz MODE : USB Receive Meaturement condition : 50Ω terminated			CN504			Output level check	–5~+2dBm
LO2A (CN505)				CN505				–1~+6dBm (64.220MHz)
LO3 (CN502)				CN502				–6~+0dBm (8.375MHz)
20MHz (CN503)				CN503				–10~+0dBm (20.0000MHz)
LO4 (CN501)		Oscilloscope		CN501				–10~+0dBm (10.0kHz)
11. 20MHz frequency (Final check)	1) MODE : USB Receive	f. counter		CN510 (TP)	PLL	TC800	Check	20.000MHz ± 20Hz

Receiver Section

Item	Condition	Measurement			Adjustment			Specifications/Remarks
		Test-equipment	Unit	Terminal	Unit	Parts	Method	
1. DSP PLL lock voltage adj.	1) Display f. : 14.000MHz MODE : USB	DC V.M	TX-RX	TP1	TX-RX	L4	3.50V	±0.1V
2. AGC voltage adj.	1) Display f. : 14.000MHz MODE : CW [RF] GAIN : MAX [AGC] : OFF			TP2		VR2	3.00V	±0.1V
3. MCF adj.	1) Display f. : 14.000MHz MODE : USB [AGC] : OFF Spectrum analyzer setting Center f. : 73.050MHz Frequency span : 50kHz ATT : –10dBm VBW, RBW : 1kHz V.REF : 2dB/DIV	Spectrum analyzer Tracking generator	RF	CN16 CN17	RF	L65 L67 L70 L72	Adjust so that gain is max. and band shown at right becomes flat.	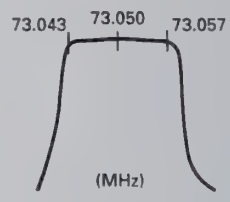
4. BPF adj	1) Display f. : 7.000MHz MODE : USB [AGC] : OFF [AIP] : OFF Spectrum analyzer setting Center f. : 7.100MHz Frequency span : 2MHz	Spectrum analyser Tracking generator	Rear panel RF	ANT CN15	RF	L28 L29 L30 L31	Waveform is as shown in the figure at the right.	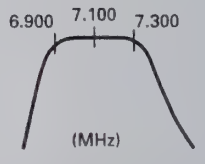
	2) Display f. : 14.000MHz Spectrum analyzer setting Center f. : 14.000MHz Frequency span : 5MHz					L38 L39 L40		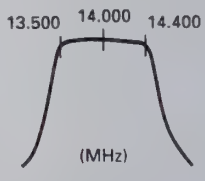
	3) Display f. : 21.000MHz Spectrum analyzer setting Center f. : 21.200MHz Frequency span : 10MHz					L44 L45 L46		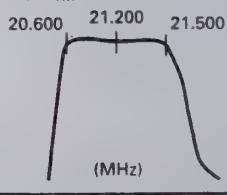

ADJUSTMENT

Item	Condition	Measurement			Adjustment			Specifications/Remarks
		Test-equipment	Unit	Terminal	Unit	Parts	Method	
(28MHz BPF adj.)	1) Display f. : 29.800MHz MODE : USB [AGC] : FAST SSG frequency : 22.101MHz SSG output : –113dBm	SSG AF V.M Oscilloscope DM. SP	Rear panel	ANT EXT. SP	RF	L50 L52	Adjust so that the gain is MAX	MAX
5. RX IF AMP adj.	1) Display f. : 14.100MHz MODE : USB [AGC] : OFF [AIP] : OFF AF output : 0.63V/8Ω SSG frequency : 14.101MHz SSG output : –119dBm	SSG AF V.M Oscilloscope DM. SP	Rear panel	ANT EXT. SP	RF Connec-tion	L75 L77 L451 L452 L458	Repeat 2~3 times for MAX AF output reading.	
• Item 6 to 10 below are adjusted in the adjustment mode. To terminate the adjustment menu in the middle, save your settings with Menu No. BA								
6. Checksum check	1) Menu No. : A0				Front panel	Display	Check	Display : E7b9
7. ALC voltage adj.	1) Menu No. : A1	DC V.M	RF	TP2	Front panel	[RIT/XIT] knob	2.70V	±0.02V
8. S-meter adj.	1) Menu No. : A2 SSG frequency : 14.101MHz SSG output : –110dBm	SSG AF V.M Oscilloscope DM. SP	Rear panel	ANT EXT. SP	TX-RX	VR1	Display : 05	±02
S1	2) Menu No. : A2 SSG output : –107dBm				Front panel	[UP] key	[UP] key : Push once time	Reference display : 12±06
S9	3) Menu No. : A3 SSG output : –81dBm							Reference display : 45±10
Full-scale	4) Menu No. : A4 SSG output : –23dBm							Reference display : 80±20
9. 8.83MHz IF filter adj.	1) Menu No. : A5 SSG1 f. : 1.79980MHz SSG1 output : –60dBm SSG2 f. : 1.80260MHz SSG2 output : –60dBm	SSG1 SSG2 Double signal pad Oscilloscope (10:1 probe)	Rear panel Connec-tion	ANT TP401	Front panel	[RIT/XIT] knob	The waveforms must cross.	OK 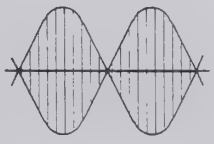
10. 455kHz IF filter adj.	1) Menu No. : A6			TP402				NG 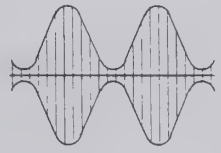

• Writing data : After items 6 to 10 have been adjusted:
1) Menu No. : BA
2) [UP] key : Push once time Display "rEAdy" → "good" (If "nG" is displayed, enter data again.)
3) [CLR] key : Push once time (Adjustment mode terminated)

ADJUSTMENT

Item	Condition	Measurement			Adjustment			Specifications/Remarks
		Test-equipment	Unit	Terminal	Unit	Parts	Method	
11. ATT check	1) Display f. : 14.100MHz SSG frequency : 14.101MHz SSG output : –107dBm [AGC] : OFF [AIP] : OFF AF output : 1V/8Ω	SSG AF V.M Oscilloscope DM. SP	Rear panel	ANT EXT. SP	Front panel	ATT SW (UP/DOWN)	AF output should be lowered 6dB at time.	AF output ± 3dB
	a. ATT : 0dB						1.0V	ATT display : None
	b. ATT [UP] key : 6dB						0.5V	ATT display : 6
	c. ATT [UP] key : 12dB						0.25V	ATT display : 12
	d. ATT [UP] key : 18dB						0.125V	ATT display : 18
	e. ATT [DOWN] key : 12dB						0.25V	ATT display : 12
	f. ATT [DOWN] key : 6dB						0.5V	ATT display : 6
	g. ATT [DOWN] key : 0dB						1.0V	ATT display : None
12. S/N check	1) Display f. : Indicated below AF VR : 0.63V/8Ω SSG f. : Indicated below However, USB : +1kHz LSB : –1kHz	SSG AF V.M Oscilloscope Distortion meter DM. SP	Rear panel	ANT EXT. SP				Note : If the frequency is 7.5MHz or less, AIP turns ON automatically. Turn AIP OFF with the AIP switch before starting measurement.
	Frequency / MODE / SSG output / SSG MOD / DEV							
	100kHz AM –87dBm 1kHz 60%						S/N measurement	10dB or more.
	1.500MHz AM –77dBm 1kHz 60%							
	1.8MHz LSB –119dBm OFF OFF						MAX sensitivity measurement	0.7V/8Ω or more.
	3.5MHz LSB –119dBm OFF OFF							
	5.5MHz LSB –119dBm OFF OFF							
	7.1MHz LSB –119dBm OFF OFF							
	10.1MHz USB –119dBm OFF OFF							
	12.5MHz USB –119dBm OFF OFF							
	14.1MHz USB –119dBm OFF OFF ←						[AIP] : ON	Sensitivity down 5~15dB.
	18.1MHz USB –119dBm OFF OFF							
	21.1MHz USB –119dBm OFF OFF							
	24.8MHz USB –123dBm OFF OFF							
	29.8MHz USB –123dBm OFF OFF							
	29.8MHz FM –119dBm 1kHz 3kHz ←						SINAD sentitivity measurement	12dB SINAD or more.
13. SSB squelch check	1) Display f. : 14.100MHz MODE : USB [AGC] : OFF SSG frequency : 14.101MHz SSG output : OFF	SSG AF V.M Oscilloscope DM. SP	Rear panel	ANT EXT. SP	Front panel	[SQL] VR	Set to the point noise disappeared.	Knob position 10 : 00~14 : 00
	2) SSG output : –101dBm						Check	Squelch should open.
	3) [SQL] VR : Fully clockwise							Squelch should close.
	4) SSG output : –83dBm							Squelch should open.
14. FM squelch check	1) Display f. : 29.8MHz MODE : FM SSG output : OFF				Front panel	[SQL] VR	Set o the point noise disappeared.	Knob position 8 : 00~12 : 00
	2) SSG output : –119dBm SSG MOD : 1kHz SSG DEV : 3kHz						Check	Squelch should open.
	3) [SQL] VR : Fully clockwise							Squelch should close.
	4) SSG output : –100dBm							Squelch should open.

ADJUSTMENT

Item	Condition	Measurement			Adjustment			Specifications/Remarks
		Test-equipment	Unit	Terminal	Unit	Parts	Method	
15. NB adj.	1) Display f. : 14.100MHz MODE : USB SSG frequency : 14.101MHz SSG output : –90dBm	SSG AF V.M Oscilloscope DM. SP DC V.M	Rear panel RF	ANT EXT. SP TP1	RF	L81 L82	Voltage minimum	
	2) [NB] key : ON [NB] VR : Center	Noise G.	Rear panel	ANT			Adjust output of noise generator to small input (S1) and large input (S9) and check each.	Noise should disappear.
16. S-meter check	1) Display f. : 14.175MHz MODE : USB [AGC] : FAST [RF] GAIN : MAX SSG frequency : 14.176MHz SSG output : –107dBm	SSG AF V.M Oscilloscope DM. SP	Rear panel	ANT EXT. SP	Front panel	Display	S-meter level : S1	–111~–101dBm
	2) SSG output : –83dBm						S-meter level : S9	–89~–77dBm
	3) [NB] key : ON						S-meter level check	Same as when [NB] key off.
17. Auto notch check	1) Display f. : 14.175MHz MODE : USB SSG frequency : 14.1765MHz SSG output : –73dBm [AUTO NOTCH] key : Push (ON)	SSG	Rear panel	ANT	Front panel	Display	S-meter level check	S-meter off.
18. Voice check (equipped on VS-2)	1) [AF] VR : Arbitrary [MENU] key : Push (ON) [M.CH/VFO.CH] knob : Menu No. 48 [UP] key : Step 73 [MENU] key : Push (OFF) [FINE] key : Push (ON)						Check	The displayed frequency can be heard vocally.

Transmitter Section

Item	Condition	Measurement			Adjustment			Specifications/Remarks
		Test-equipment	Unit	Terminal	Unit	Parts	Method	
1. TX MCF adj.	1) Display f. : 14.200MHz MODE : USB Transmit Spectrum analyzer setting TG output : –10dBm Center f. : 8.83MHz Span : 10kHz V.REF : 2dB/DIV	Tracking generator Spectrum analyzer	RF	CN10 TP3	RF	L100	MAX.	
2. TX IF AMP adj.	1) Display f. : 14.200MHz MODE : CW [CAR] VR : Center Disconnect CN4 from the RF unit and connect a 50Ω dummy load. Transmit	50Ω dummy Oscilloscope	RF	CN4	RF Connection	L99,98 L95,94 L92,91 L89 VR3 L457 L456 L455	Repeat 2 or 3 times for MAX.	Reference value 2.5Vp-p or more
	2) After adjustment, set [CAR] VR to MAX for confirmation.							

ADJUSTMENT

Item	Condition	Measurement			Adjustment			Specifications/Remarks
		Test-equipment	Unit	Terminal	Unit	Parts	Method	
3. Final base current	1) Display f. : 14.200MHz MODE : USB [MIC] VR : MIN [CAR] VR : MIN Final unit VR501,502 : MIN Connect ammeter + : External power supply – : Power connector Adjust to minimum current with VR501 and VR502 in the final unit. Transmit	Ammeter			Final	VR501	Current drain (Minimum current) +250mA	First adjust VR501 and VR502 for minimum. Adjust VR501 for an increase of 250mA when switched to TX. Then adjust VR502 for 250mA over this reading.
						VR502	Current drain (Minimum current) + driver current (250mA) + 250mA.	
• Item 4 to 13 below are adjusted in the adjustment mode. To terminate the adjustment menu in the middle, save your settings with Menu No. BA.								
4. ALC adj.	1) Menu No. : A7 Transmit	Power meter	Rear panel	ANT	Front panel	[RIT/XIT] knob	100W	±5.0W
5. NULL adj.	1) Menu No. : A7 Transmit	Power meter DC V.M	Rear panel Filter	ANT CN5	Filter	TC1	MIN.	Reference value 0.5V or less
6. ALC frequency response adj.	1) TX [M.CH] key : Push Display f. : 29.700MHz MODE : CW Transmit	Power meter	Front panel	ANT	Filter	VR1	95W	±5.0W
	2) TX [M.CH] key : Push Menu No. : A7 Transmit						100W power check	100W ± 5W When unable to be set within the range, ALC and frequency response to be adjusted.
7. TX power adj. The power meter on the display is also calibrat--ed at the same time.	1) 50W Menu No. : A8 Transmit After adjustment, [UP] key : Push	Power meter	Rear panel	ANT	Front panel	[RIT/XIT] knob	50W	±3.0W
	2) 25W Menu No. : A9 Transmit After adjustment, [UP] key : Push						25W	±2.0W
	3) 10W Menu No. : AA Transmit After adjustment, [UP] key : Push						11W	±2.0W
8. TX gain adj.	1) 1.9MHz band Menu No. : AB Transmit	Power meter	Rear panel	ANT	Front panel	[UP] key	Press the [UP] key after the beep sounds for two or three seconds.	
	2) 3.5MHz band Menu No. : AC Transmit							
	3) 7.0MHz band Menu No. : AD Transmit							
	4) 10.1MHz band Menu No. : AE Transmit							
	5) 14.1MHz band Menu No. : AF Transmit							

ADJUSTMENT

Item	Condition	Measurement			Adjustment			Specifications/Remarks
		Test-equipment	Unit	Terminal	Unit	Parts	Method	
	6) 18.0MHz band Menu No. : B0 Transmit	Power meter	Rear panel	ANT	Front panel	[UP] key	Press the [UP] key after the beep sounds for two or three seconds.	
	7) 21.0MHz band Menu No. : B1 Transmit							
	8) 24.9MHz band Menu No. : B2 Transmit							
	9) 29.7MHz band Menu No. : B3 Transmit							
9. ALC meter adj.	1) 1 dot Menu No. : B4 Transmit	Power meter	Rear panel	ANT	Front panel	[UP] key	[UP] key : Push	
	2) Zone MAX Menu No. : B5 Transmit							
	3) Full Menu No. : B6 Transmit							
10. SWR protection adj.	1) Nenu No. : B7 Transmit After adjustment, [UP] key : Push	Through type power meter 150Ωdummy	Rear panel	ANT	Front panel	[RIT/XIT] knob	40W	±3.0W
11. SWR meter adj.	1) Menu No. : B8 Transmit					[UP] key	[UP] key : Push	
12. FM DEV adj.	1) Menu No. : B9 AG output : 1kHz/30mV Transmit	Power meter Linear detector AG	Rear panel	ANT	Front panel	[RIT/XIT] knob	4.6kHz	±0.1kHz
13. FM MIC sense check	1) Menu No. : B9 AG output : 1kHz/3mV **E,X** AG output : 1kHz/5mV **K,P,M**		Front panel	MIC			Check	3.0kHz ± 0.5kHz
• Writing data : After items 4 to 13 have been adjusted: 1) Menu No. : BA 2) [UP] key : Push once time Display "rEAdy" → "good" (If "nG" is displayed, enter data again.) 3) [CLR] key : Push once time (Adjustment mode terminated)								
14. Spurious adj.	1) Display f. : 24.900MHz MODE : CW Transmit	Power meter Spectrum analyzer	Rear panel	ANT	RF	VR2	±1.65MHz spurious level MIN.	–60dB or less
15. Monitor level check	1) Display f. : 21.100MHz MODE : USB [MONI] key : ON [MONI] VR : Center [MIC] VR : Center [AF] VR : MIN AG output : 1kHz/10mV Transmit	Power meter AF V.M Oscilloscope DM. SP AG AF V.M	Rear panel Front panel	ANT EXT. SP MIC	Front panel	Display	Check	0.2V ± 0.05V

ADJUSTMENT

Item	Condition	Measurement			Adjustment			Specifications/Remarks
		Test-equipment	Unit	Terminal	Unit	Parts	Method	
16. Processor check	1) Display f. : 14.200MHz MODE : USB [MIC] VR : Center [PROC] key : ON [METER] : COMP AG output : 1kHz/10mV	Power meter AG AF V.M	Rear panel Front panel	ANT MIC	Front panel	Display	Check	COMP meter : 15~25dB
	2) AG output : 1kHz/1mV							COMP meter : 1dot light
17. Sidetone check	1) Display f. : 14.200MHz MODE : CW [MONI] VR : Center Key down	AF V.M Oscilloscope DM. SP Electronic keyer jig	Rear panel	EXT. SP KEY			Check	0.63V ± 0.3V
18. CW break-in check	1) Display f. : 14.200MHz MODE : CW [VOX] key : ON [FULL/SEMI] key : FULL	Power meter Oscilloscope Electronic keyer jig	Rear panel	ANT KEY			Electronic keyer jig : Key down	Full break-in operation (When the key is turned OFF, the receive mode returns immediately.)
	2) [FULL/SEMI] key : SEMI [DELAY] knob : Center							Semi break-in operation (When the key is turned OFF, the receive mode returns after a while.)
19. DRU check (equipped on DRU-3)	1) Connect a microphone to the MIC jack. MODE : USB/LSB [MIC] VR : Center [REC] key : Push						Hold down the [CH1], and talk into the microphone.	Can be recorded for about 15 seconds.
							Release and press the [CH1] key again.	The recorded voice must be played back.
20. Sub tone check	1) Display f. : 29.100MHz MODE : FM MIC jack : 600Ω terminated [A=B], [TX-B] key : Push [M.IN] key : Push two times [RX-M.CH] : Push Transmit	Power meter Linear detector Oscilloscope f. counter Microphone	Rear panel Front panel	ANT MIC			Check	DEV : ±0.5~1.0kHz Tone f. : 88.2~88.7Hz
21. TX frequency check	1) Display f. : 29.100MHz MODE : CW Transmit							29.100.000MHz ± 145Hz
22. TX frequency characteristic check	1) Display f. : 14.200MHz MODE : USB/LSB MIC jack : Connect to AG AG output : 1kHz/5mV 400Hz/5mV 2.6kHz/5mV Transmit	Power meter Oscilloscope AG AF V.M	Rear panel Front panel	ANT MIC			a. Set AG to 1.0kHz and turn the [MIC] VR to set to 100W. b. Change the AG frequency and measure the difference between the power levels at 1.0kHz and at another frequency c. Take a measurement for each USB and LSB.	Within 6dB

ADJUSTMENT

Item	Condition	Measurement			Adjustment			Specifications/Remarks
		Test-equipment	Unit	Terminal	Unit	Parts	Method	
23. Processor check	1) Display f. : 14.200MHz MODE : USB [PROC] key : ON [METER] key : Push [PROC] VR : MIN MIC jack : Connect to AG AG output : 1.0kHz/1mV Transmit						Change [PROC] VR so that the first segment on the COMP meter lights.	
	2) AG output : 1.0kHz /10mV (20dB UP) Transmit						Check	COMP meter : within 15~25dB
24. AT	1) Display f. : Indicated below MODE : CW [METER] : SWR [THRU/AUTO] : AUTO Transmit After checked retuen to receive mode.	Through type power meter 150Ωdummy	Rear panel	ANT	Front panel	Display	Check	ON AIR LED light. AT TUNE LED light. When tuning completed, LEDs off.
	2) [AT TUNE] key : ON	Frequency 1.910MHz 3.500 3.700 7.000 10.100 14.000 18.100 21.000 24.900 29.700			AT	TC1	Note : When 29.700MHz and SWR 1.0 to 1.3, variiable capacitor has flutters so that it does not stop, adjust the TC1 at which SWR 1.2 or less is acceptable.	Begins AT tuning after entering the transmission state. This should stop within roughly 6 seconds. SWR : 1.2 or less Power : 70W or more

Adjustment Points

■ **Side view**

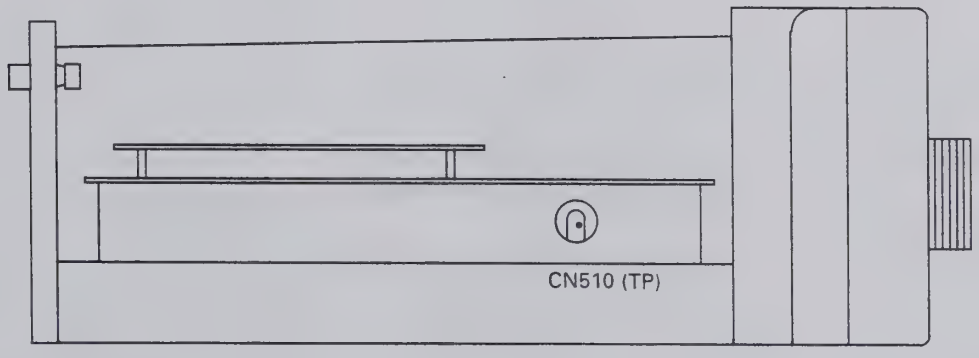

ADJUSTMENT

■ Upper view

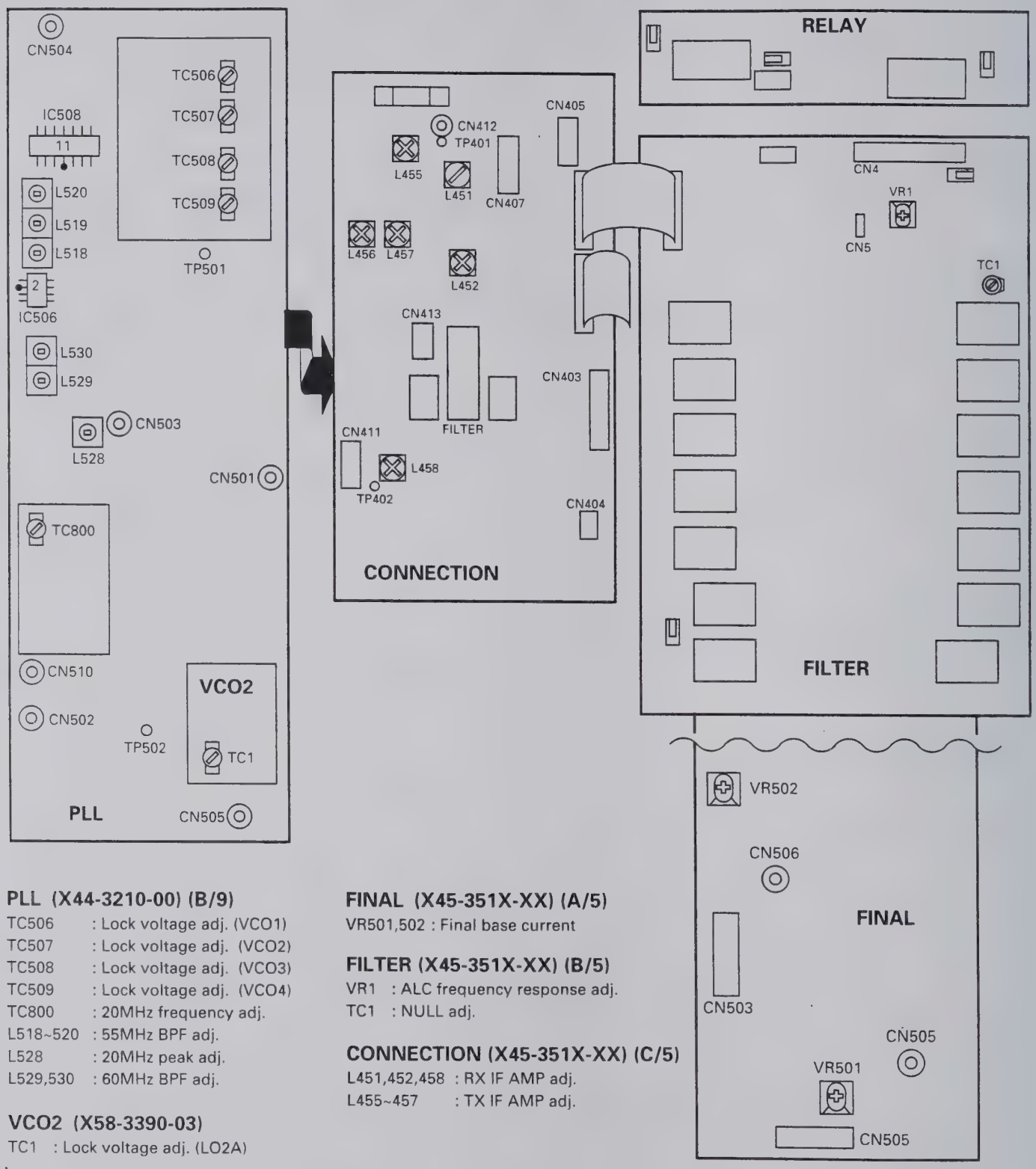

PLL (X44-3210-00) (B/9)

TC506 : Lock voltage adj. (VCO1)
TC507 : Lock voltage adj. (VCO2)
TC508 : Lock voltage adj. (VCO3)
TC509 : Lock voltage adj. (VCO4)
TC800 : 20MHz frequency adj.
L518~520 : 55MHz BPF adj.
L528 : 20MHz peak adj.
L529,530 : 60MHz BPF adj.

VCO2 (X58-3390-03)

TC1 : Lock voltage adj. (LO2A)

FINAL (X45-351X-XX) (A/5)

VR501,502 : Final base current

FILTER (X45-351X-XX) (B/5)

VR1 : ALC frequency response adj.
TC1 : NULL adj.

CONNECTION (X45-351X-XX) (C/5)

L451,452,458 : RX IF AMP adj.
L455~457 : TX IF AMP adj.

ADJUSTMENT

■ **Lower view**

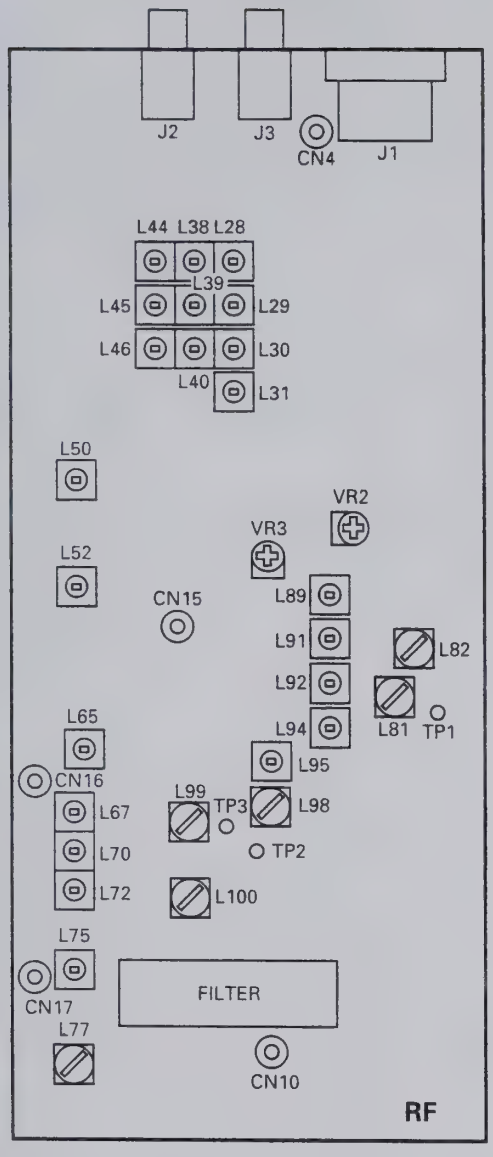

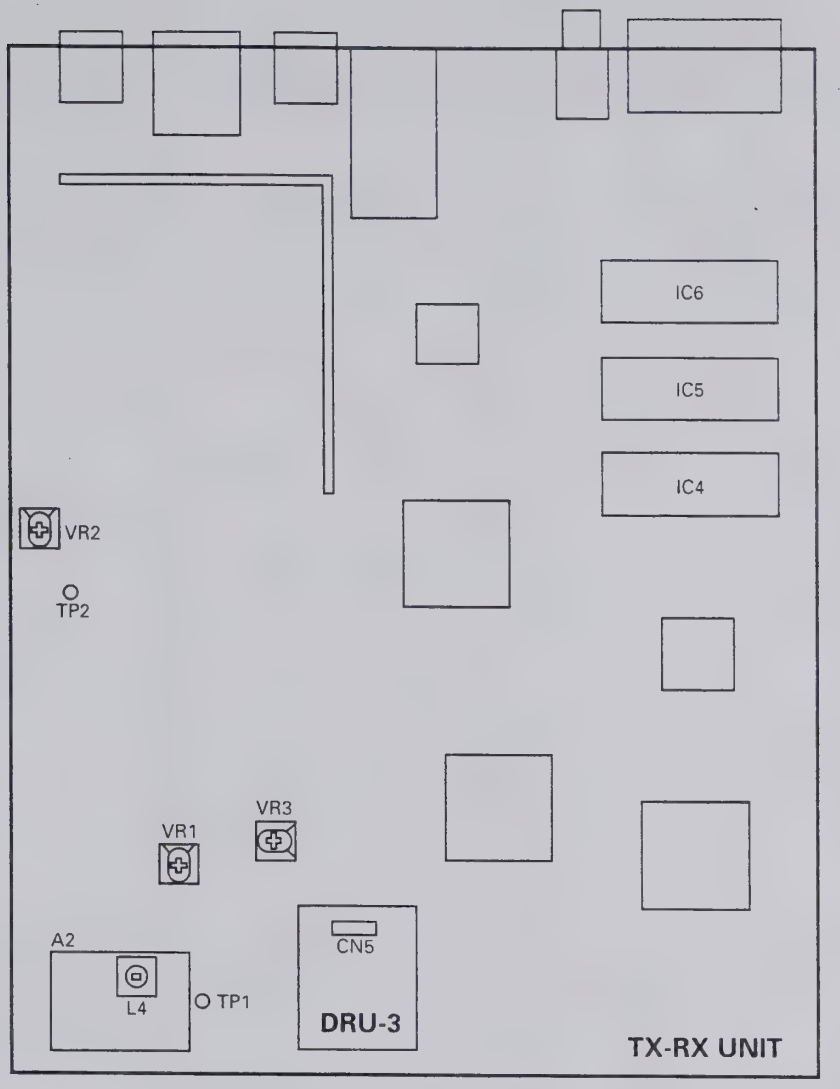

RF (X44-3210-00) (A/9)

VR2	: Spurious adj.
VR3,L89,91,92,94,95,98,99	: TX IF AMP adj.
L28~31,38~40,44~46,50,52	: BPF adj.
L65,67,70,72	: MCF adj.
L75,77	: RX IF AMP adj.
L81,82	: NB adj.
L100	: TX MCF adj.

TX-RX UNIT (X57-4620-00)

VR1 : S-meter adj.
VR2 : AGC voltage adj.
VR3 : DRU-3 recording level adj. (Adjusted to the mechanical center)
L4 : DSP PLL lock voltage adj.

TERMINAL FUNCTION

CN No.	Pin No.	Name	Function
RF UNIT (X44-3210-00) (A/9) : RF			
CN2	Coaxial	RAT	RX signal
CN4	Coaxial	DRV	TX drive signal
CN5	Coaxial	LO1	1st local oscillation 73.08~103.05MHz
CN6	Coaxial	LO2A	2nd local oscillation 64.22MHz
CN7	1	TXB	TX 8V
	2	RXB	RX 8V
	3	AGC	AGC voltage
CN10	Coaxial	TR88	RX IF output/TX IF input 8.83MHz
CN13	1	SPO	Speaker signal
	2	CKY	Keying signal
	3	AGC	AGC voltage
	4	TXC	TX : "H"
	5	RXC	RX : "H"
	6	8A	Analog 8V
	7	14S	14V-switched
	8	GND	GND
CN14	1	15K	Filter selection 15kHz
	2	3K	Filter selection 3kHz
	3	6K	Filter selection 6kHz
	4	VSF	Forward wave detection voltage
	5	VSF	Reflected wave detection voltage
	6	ALM	ALC meter output
	7	THP	Thermal protection
	8	NC	
	9	UCK2	RF serial/parallel convert clock
	10	UDA2	RF serial/parallel convert data
	11	ENR1	RF serial/parallel convertor IC1 enable
	12	ENR2	RF serial/parallel convertor IC2 enable
	13	ENR3	DAC enable
	14	NC	
	15	RBK	RF blank signal
	16	–6	–6V
	17	GND	GND
	18	NC	
	19	SS	TX/RX control signal TX : "L"
	20	NC	
J1	1	SPO	Speaker signal
	2	COM	Relay common terminal
	3	SS	TX/RX control signal
	4	MKE	TX relay close
	5	BRK	TX relay open
	6	ALC	ALC input
	7	RL	13V output when TX
J2		EXT RX	External receiver output
J3		IF OUT	SM-230
RF UNIT (X44-3210-00) (B/9) : PLL			
CN500	1	GND	GND
	2	NFMT	FM modulation on/off signal (FM TX : "L")
	3	VB3	21.489~30MHz } VCO select signal
	4	VB2	14.489~21.489MHz } Active "H"
	5	VB1	7.489~14.489MHz }
	6	VB0	0~7.489MHz
	7	UNL	Unlock detection output (Unlock : "H")
	8	GND	GND
	9	PLE2	PLL2 enable signal (LO2A)
	10	PLE1	PLL1 enable signal (LO1)
	11	PCK	Clock
	12	PDA	PLL, DDS data
	13	14D	14V
	14	DLE3	DDS3 enable signal (LO4)
	15	DLE2	DDS2 enable signal (LO3)
	16	DLE1	DDS1 enable signal (LO1)
	17	TXC	PLL DDS latch select signal (TX : "H")
	18	GND	GND
	19	9P	9V
	20	5P	5V
CN501	1	GND	GND
	2	LO4	DDS3 output
CN502	Coaxial	LO3	DDS2 output (8.375MHz)
CN503	Coaxial	REF	Reference signal output for TX-RX unit (20MHz)
CN504	Coaxial	LO1	LO1 output (73.08~103.05MHz)
CN505	Coaxial	LO2A	LO2A output (64.22MHz)
CN506	1	FMD	FM modulation signal
	2	GND	GND
	3	GND	GND
RF UNIT (X44-3210-00) (D/9) : PHONE			
CN901	1	SPI1	Phone jack through
	2	SPG	GND
	3	SPO1	Phone jack output
RF UNIT (X44-3210-00) (E, F, G, H, I/9) : VR			
CN903	1	DGND	Digital GND
	2	VPWR	MIC/PWR VR 1
	3	VMIC	MIC/PWR VR 2
	4	VDLY	CAR/DELAY VR 1
	5	VCAR	CAR/DELAY VR 2
	6	5D	5V
CN904	1	DGND	Digital GND
	2	VMON	PROC/MONI VR 1
	3	VPRC	PROC/MONI VR 2
	4	VKEY	AGC/KEY VR 1
	5	VAGC	AGC/KEY VR 2
	6	5D	5V
CN905	1	NC	
	2	WENB	Width encoder B
	3	WENA	Width encoder A
	4	SENB	Shift encoder B
	5	SENA	Shift encoder A
	6	GND	GND
CN906	1	GND	GND
	2	VRF	AF/RF VR 1
	3	VAF	AF/RF VR 2
	4	RENA	RIT encoder A
	5	RENB	RIT encoder B
	6	5D	5V
CN907	1	GND	GND
	2	VSQL	NB/SQL VR 1
	3	VNB	NB/SQL VR 2
	4	CENA	M.CH encoder A
	5	CENB	M.CH encoder B
	6	5D	5V
FINAL UNIT (X45-351X-XX) (A/5) : FINAL			
CN501	Coaxial	DRV	Drive input (From RF)
CN502	Coaxial	PO	TX signal output (To FILTER)
CN503	1	14S	13.8V
	2	14S	13.8V
	3	TXB	TX 13.8V
	4	GND	GND
	5	GND	GND
CN504	1	14V	13.8V
	2	14V	13.8V
	3	GND	GND

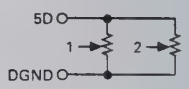

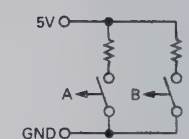

TERMINAL FUNCTION

CN No.	Pin No.	Name	Function
W501	Board	14F	Power supply 13.8V connecting harness
	in	14F	Power supply 13.8V connecting harness
		GND	Power supply 13.8V connecting harness
		GND	Power supply 13.8V connect ing harness
FIANL UNIT (X45-351X-XX) (B/5) : FILTER			
CN1	Coaxial	PO	Filter input signal
CN2	Coaxial	ATO	TX output signal (To AT)
CN3	1	8A	8V
	2	GND	GND
	3	GND	GND
	4	14S	14V
	5	14S	14V
	6	UCK2	Shift register clock
	7	UDA2	Shift register data
	8	ENF1	Shift register enable
	9	DGND	Digital GND
	10	TXB	TX power 8V
	11	VSF	Forward wave detection voltage
	12	VSR	Reflected wave detection voltage
CN4	1	ATA	Make for AT through/on relay
	2	28AT	24.5~30MHz
	3	25AT	21.5~24.5MHz
	4	18AT	18.5~21.5MHz
	5	14AT	14.5~18.5MHz
	6	10AT	10.5~14.5MHz
	7	7AT	4.0~7.5MHz
	8	4AT	2.5~4.0MHz
	9	GND	GND
	10	14S	14V
	11	GND	GND
W1	1	RL	TX/RX select signal output
	2	ANTS	ANT 1/2 select signal output
	3	GND	GND
FINAL UNIT (X45-351X-XX) (C/5) : CONNECTION			
CN401	1	15K	455kHz filter select "L" : Filter on
	2	3K	455kHz filter select "L" : Filter on
	3	6K	455kHz filter select "L" : Filter on
	4	TT	External AT tuning control (Pass through)
	5	TS	External AT tuning control (Pass through)
	6	UCK2	Pass through
	7	UDA2	Pass through
	8	ENF1	Pass through
	9	VSF	Pass through
	10	VSR	Pass through
	11	THP	Pass through
	12	14D	14V
	13	14D	14V
	14	14V	14V
	15	14V	14V
	16	PWS	Power switch on : "H"
	17	9P	PLL power 9V
	18	5P	PLL power 5V
	19	–6	–6V output
	20	GND	GND
CN402	1	8A	8V
	2	GND	GND
	3	GND	GND
	4	14S	13.8V
	5	14S	13.8V
	6	UCK2	Pass through
	7	UDA2	Pass through
	8	ENF1	Pass through
	9	DGND	Digital GND
	10	TXB	TX power 8V
	11	VSF	Pass through
	12	VSR	Pass through
CN403	1	14A	13.8V
	2	14S	13.8V
	3	8D	Digital 8V
	4	8A	Analog 8V
	5	APG	GND
	6	SPO3	Speaker output signal input
	7	SPG	Speaker GND
CN404	1	SPG	Speaker GND
	2	SP	Speaker output signal
CN405	1	14S	13.8V
	2	14S	13.8V
	3	AGND	Analog GND
	4	AGND	Analog GND
CN406	1	THP	Pass through
	2	TXB	Pass through
	3	14D	13.8V
	4	8D	Digital 8V
	5	14D	13.8V
	6	8A	Analog 8V
	7	GND	GND
	8	GND	GND
	9	14S	13.8V
	10	14S	13.8V
	11	14S	13.8V
	12	PSW	Power switch on : "H"
	13	14V	13.8V
CN407	1	14S	13.8V
	2	AGND	Analog GND
	3	TT	Pass through
	4	TS	Pass through
	5	GND	GND
CN410	Coaxial	LO3	Local LO3 8.375MHz (From PLL)
CN411	1	TIF	TX IF input
	2	GND	GND
	3	RIF	RX IF output
	4	GND	GND
CN412	Coaxial	TR88	8.83MHz
CN413	1	TXB	TX power 8V
	2	RXB	RX power 8V
	3	AGC	AGC line
FINAL UNIT (X45-351X-XX) (D/5) : AVR			
CN601	1	14V	13.8V
	2	14V	13.8V
	3	GND	GND
CN602	1	14S	13.8V
	2	14S	13.8V
	3	AGND	Analog GND
	4	AGND	Analog GND
CN603	1	THP	Thermal protection on : "H"
	2	TXB	TX 13.8V
	3	14D	13.8V
	4	8D	Digital 8V
	5	14D	Digital 13.8V
	6	8A	Analog 8V
	7	GND	GND
	8	GND	GND
	9	14S	13.8V
	10	14S	13.8V

AT coil tap band data

TERMINAL FUNCTION

CN No.	Pin No.	Name	Function
	11	14S	13.8V
	12	PSW	Power switch on : "H"
	13	14V	13.8V
CN604	1	14S	13.8V
	2	14S	13.8V
	3	TXB	TX 13.8V
	4	GND	GND
	5	GND	GND
CN605	1	MOT+	Moter drive +
	2	MOT –	Motor drive –
FINAL UNIT (X45-351X-XX) (E/5) : RELAY			
CN301	1	RL	TX/RX select signal input
	2	ANTS	ANT 1/2 select signal input
	3	GND	GND
CN302	Coaxial	ATO	TX signal input (From FILTER)
CN303	Coaxial	RAT	RX signal output (To RF)
CN304	Coaxial	AT1	Input/output to AT (RX : Output, TX : Input)
CN305	Coaxial	AT2	Input/output to AT (RX : Input, TX : Output)
CN306	TP		ANT1 GND
CN307	TP		ANT2 GND
W301	TP		ANT1 signal line
W303	TP		ANT2 signal line
AT UNIT (X53-3340-02)			
CN1	Coaxial	AT1	AT input
CN2	Coaxial	AT2	AT output
CN3	1	VRE	+5V reference voltage for A/D
	2	POD2	VC2 position detection, VR101 output
	3	GND	GND
	4	POD1	VC1 position detection, VR102 output
CN4	1	NC	
	2	M2–	Motor 2 drive –
	3	M2+	Motor 2 drive +
	4	M1–	Motor 1 drive –
	5	M1+	Motor 1 drive +
CN5	1	NC	
	2	F15	Power line 11~14V
	3	GND	GND
CN6	1	ATA	Make for AT through/on relay "L" : On
	2	NC	
CN7	1	ATG	GND for discriminating that is connected to microcomputer
	2	SPED	Motor speed control pulse
	3	APRE	Control selection "H" : Preset type, "L" : Auto tuning type
	4	VRE	+5V reference voltage for A/D
	5	PR22	Motor 2 control signal
	6	PR21	Motor 2 control signal
	7	POD2	VC2 position detection
	8	PR12	Motor 1 control signal
	9	PR11	Motor 1 control signal
	10	POD1	VC1 position detection
	11	GND	GND
CN101	1	28AT	24.5~30MHz
	2	15AT	21.5~24.5MHz
	3	NC	
	4	18AT	18.5~21.5MHz
	5	14AT	14.5~18.5MHz
	6	10AT	10.5~14.5MHz
	7	7AT	4.0~7.5MHz
	8	4AT	2.5~4.0MHz

AT coil tap band data

CN No.	Pin No.	Name	Function
	9	GND	GND
CONTROL UNIT (X53-356X-XX) (A/4) : CONTROL			
CN1	1	GND	GND
	2	NFMT	Not FM TX signal
	3	VB3	VCO selest signal
	4	VB2	VCO select signal
	5	VB1	VCO select signal
	6	VB0	VCO select signal
	7	UNL	PLL unlock signal
	8	GND	GND
	9	PLE2	PLL2 enable signal
	10	PLE1	PLL1 enable signal
	11	PCK	PLL serial clock
	12	PDA	PLL serial data
	13	14D	Digital 13.8V
	14	DLE3	DDS3 enable signal
	15	DLE2	DDS2 enable signal
	16	DLE1	DDS1 enable signal
	17	TXC	TX control signal
	18	GND	GND
	19	9P	PLL power 9V (Pass through)
	20	5P	PLL power 5V (Pass through)
CN2	1	GND	GND
	2	–6	–6V (Pass through)
	3	5P	PLL power 5V (Pass through)
	4	9P	PLL power 9V (Pass through)
	5	PSW	Power control signal
	6	14V	13.8V
	7	14V	13.8V
	8	14D	Digital 13.8V
	9	14D	Digital 13.8V
	10	THP	Thermal protection
	11	VSR	Reflected wave analog voltage
	12	VSF	Forward wave analog voltage
	13	ENF1	Enable for IC1 on FILTER board
	14	UDA2	Serial data for IC1 on FILTER board
	15	UCK2	Serial clock for IC1 on FILTER board
	16	TS	AT-300 control signal
	17	TT	AT-300 control signal
	18	6K	6kHz filter select signal
	19	3K	3kHz filter select signal
	20	15K	15kHz filter select signal
CN3	1	5D	Digital 5V
	2	MENA	Main encoder pulse A
	3	MENB	Main encoder pulse B
	4	DGND	Digital GND
CN4	1	NC	
	2	NC	
	3	SPED	Internal AT speed control signal
	4	APRE	Internal AT control select signal
	5	VRE	Reference voltage for A/D convertor
	6	PR22	Motor 2 control signal
	7	PR21	Motor 2 control signal
	8	POD2	Motor 2 position voltage
	9	PR12	Motor 1 control signal
	10	PR11	Motor 1 control signal
	11	POD1	Motor 1 position voltage
	12	GND	GND
CN5	1	GND	GND
	2	CTS	Communication inhibit signal from TS-870S
	3	RTS	Communication inhibit signal from personal computer
	4	RXD	TX data from TS-870S
	5	TXD	RX data from personal computer

TERMINAL FUNCTION

CN No.	Pin No.	Name	Function
	6	KEYS	Key jack sensing signal
	7	DASH	Electronic keyer dash signal
	8	DOT	Electronic keyer dot signal
	9	GND	GND
	10	H0	DSP control data bus
	11	H1	DSP control data bus
	12	H2	DSP control data bus
	13	H3	DSP control data bus
	14	H4	DSP control data bus
	15	H5	DSP control data bus
	16	H6	DSP control data bus
	17	H7	DSP control data bus
	18	HENA	DSP A enable signal
	19	HENB	DSP B enable signal
	20	HRW	DSP read/write control signal
CN6	1	GND	GND
	2	HA0	DSP control address bus
	3	HA1	DSP control address bus
	4	HA2	DSP control address bus
	5	GND	GND
	6	BEEP	Beep control signal
	7	MD	Microphone down signal
	8	MU	Microphone up signal
	9	SS	Standby switch
	10	GND	GND
	11	KEY	Key down signal
	12	DRST	DSP reset signal
	13	CKY	TX wave control signal
	14	RXC	RX control signal
	15	TXC	TX control signal
	16	AMUT	AF mute signal
	17	VCEN	TX-RX unit IC26 enable
	18	UCK2	TX-RX unit serial clock
	19	UDA2	TX-RX unit serial data
	20	DREN	DRU-3 control enable signal
	21	PLUL	TX-RX unit PLL unlock signal
	22	PLEN	TX-RX unit PLL control enable signal
	23	EOM	DRU-3 end of message
	24	VBSY	VS-2 busy signal
	25	STR	VS-2 synthesize control signal
	26	GND	GND
CN7	1	5D	Digital 5V
	2	VAGC	AGC VR analog voltage
	3	VKEY	KEY VR analog voltage
	4	VPRC	PROC VR analog voltage
	5	VMON	MONI VR analog voltage
	6	DGND	Digital GND
	7	NC	
	8	5D	Digital 5V
	9	VCAR	CAR VR analog voltage
	10	VDLY	DELAY VR analog voltage
	11	VMIC	MIC VR analog voltage
	12	VPWR	PWR VR analog voltage
	13	DGND	Digital GND
CN8	1	5D	Digital 5V
	2	14D	Digital 13.8V
	3	14D	Digital 13.8V
	4	ENL2	LCD driver control enable signal
	5	ENL3	LCD driver control enable signal
	6	UDA1	LCD driver control serial data
	7	UCK1	LCD driver control serial clock
	8	BLANK	LCD goes off control signal
	9	DIM	LCD dimmer control signal
	10	GND	GND

CN No.	Pin No.	Name	Function
CN9	1	BLNK	LED goes off control signal
	2	K0	Key input 0
	3	K1	Key input 1
	4	K2	Key input 2
	5	K3	Key input 3
	6	K4	Key input 4
	7	K5	Key input 5
	8	K6	key input 6
	9	K7	Key input 7
	10	PSW	Power switch input signal
	11	ENL4	Enable for IC501 on SW board
	12	ENL1	Enable for IC502~504 on SW board
	13	UDA1	Serial data for SW board
	14	UCK1	Serial clock for SW board
	15	LATC	AT tune LED control signal
	16	TXC	TX control signal (TX LED control)
	17	RES	IC501~504 reset signal
	18	5V	5V
	19	5D	Digital 5V
	20	DGND	Digital GND
CN10	1	NC	
	2	WENB	Width encoder pulse B
	3	WEBA	Width encoder pulse A
	4	SENB	Shift encoder pulse B
	5	SENA	Shift encoder pulse A
	6	GND	GND
	7	NC	
	8	5D	Digital 5V
	9	RENB	RIT encoder pulse B
	10	RENA	RIT encoder pulse A
	11	VAF	AF VR analog voltage
	12	VRF	RF VR analog voltage
	13	GND	GND
	14	NC	
	15	5D	Digital 5V
	16	CENB	Click encoder pulse B
	17	CENA	Click encoder pulse A
	18	VNB	NB VR analog voltage
	19	VSQL	SQL VR analog voltage
	20	GND	GND
CN11	1	NC	
	2	SS	Standby switch
	3	NC	
	4	GND	GND
	5	–6	–6V
	6	RBK	RF mute signal
	7	NC	
	8	ENR3	Enable for IC7 on RF board
	9	ENR2	Enable for IC2 on RF board
	10	ENR1	Enable for IC1 on RF board
	11	UDA2	Serial data for RF board
	12	UCK2	Serial clock for RF board
	13	NC	
	14	THP	Thermal protection
	15	ALM	ALC meter analog voltage
	16	VSR	Reflected wave analog voltage
	17	VSF	Forward wave analog voltage
	18	6K	6kHz filter select signal
	19	3K	3kHz filter select signal
	20	15K	15kHz filter select signal

CONTROL UNIT (X53-356X-XX) (B/4) : SW

CN501	1	DGND	Digital GND
	2	5D	Digital 5V

TERMINAL FUNCTION

CN No.	Pin No.	Name	Function
	3	5V	5V
	4	RES	IC501~504 reset signal
	5	TXC	TX control signal (TX LED control)
	6	LATC	AT tune LED control signal
	7	UCK1	Serial clock
	8	UDA1	Serial data
	9	ENL1	IC502~504 enable
	10	ENL4	IC501 enalbe
	11	PSW	Power switch output signal
	12	K7	Key output 7
	13	K6	Key output 6
	14	K5	Key output 5
	15	K4	Key output 4
	16	K3	Key output 3
	17	K2	Key output 2
	18	K1	Key output 1
	19	K0	Key output 0
	20	BLNK	LED goes off control signal
CONTROL UNIT (X53-356X-XX) (D/4) : MIC			
CN902	1	SS	Standby switch
	2	MD	Microphone down signal
	3	MU	Microphone up signal
	4	8M	8V for microphone
	5	MCG	GND
	6	MSG	MIC GND
	7	MIC	Microphone signal output
TX-RX UNIT (X57-4620-00)			
CN1	1	TIF	TX IF output (455kHz)
	2	GND	TIF GND
	3	RIF	RX IF input (455kHz)
	4	GND	RIF GND
CN3	1	LO4	Local 4 input (466kHz)
	2	GND	LO4 GND
	3	FMD	FM modulation output (To PLL)
	4	GND	FMD GND
CN4	1	MIC	Microphone signal input
	2	MSG	MIC GND
	3	MCG	GND
	4	SS	Microphone standby switch
	5	MU	Microphone up
	6	MD	Microphone down
	7	8M	8V for microphone
CN5	1	GND	GND
	2	DRMG	MIC GND
	3	DRM	Microphone signal output
	4	DRO	DRU-3 playback signal input
	5	5D	Digital 5V for DRU-3
	6	GND	GND
	7	EOM	End of message (End : "H")
	8	OVF	Over flow signal (Over flow : "L")
	9	DREN	DRU-3 enable
	10	SD	DRU-3 serial data
	11	SCK	DRU-3 clock
CN6	1	VO	Audio signal
	2	GND	GND
	3	SD	VS-2 control data
	4	SCK	VS-2 control data clock
	5	BSY	VS-2 busy
	6	STR	VS-2 synthesize control
	7	5C	5V for VS-2
	8	GND	GND
CN7	1	GND	GND

CN No.	Pin No.	Name	Function
	2	HA0	DSP data address
	3	HA1	DSP data address
	4	HA2	DSP data address
	5	GND	GND
	6	BEEP	Beep control signal
	7	MD	Microphone down signal
	8	MU	Microphone up signal
	9	SS	Standby switch
	10	GND	GND
	11	KEY	Key down signal
	12	DRST	DSP reset signal
	13	CKY	TX wave control signal
	14	RXC	RX control signal
	15	TXC	TX control signal
	16	AMUT	AF mute signal
	17	VCEN	IC26 enable
	18	UCK2	Serial clock for TX-RX unit
	19	UDA2	Serial data for TX-RX unit
	20	DREN	DRU-3 enable
	21	PLUL	TX-RX unit PLL unlock signal output
	22	PLEN	TX-RX unit PLL enable
	23	EOM	DRU-3 end of message signal output
	24	VBSY	VS-2 busy signal
	25	STR	VS-2 synthesize control signal
	26	GND	GND
CN8	1	GND	GND
	2	CTS	TX inhibit signal from TS-870S
	3	RTS	TX inhibit signal from personal computer
	4	RXD	TX data from TS-870S
	5	TXD	RX data from personal computer
	6	KEYS	Key jack sensing signal
	7	DASH	Electronic keyer dash signal
	8	DOT	Electronic keyer dot signal
	9	GND	GND
	10	H0	DSP data bus
	11	H1	DSP data bus
	12	H2	DSP data bus
	13	H3	DSP data bus
	14	H4	DSP data bus
	15	H5	DSP data bus
	16	H6	DSP data bus
	17	H7	DSP data bus
	18	HENA	DSP A enable signal
	19	HENB	DSP B enable signal
	20	HRW	DSP read/write control signal
CN9	1	14A	Analog 13.8V
	2	8D	Digital 8V
	3	14S	13.8V
	4	8A	Analog 8V
	5	APG	GND
CN10	1	SPI1	AF input when headphone through
	2	SPG	GND
	3	SPO1	Headphone AF output
CN11	1	GND	GND
	2	14S	13.8V
	3	8A	Analog 8V
	4	RXC	RX : "L"
	5	TXC	TX : "H"
	6	AGC	AGC voltage
	7	CKY	Keying signal
	8	SPO1	Speaker signal output
CN12	1	SPO3	Internal speaker AF output
	2	SPG	GND

TERMINAL FUNCTION

CN No.	Pin No.	Name	Function
CN13	Coaxial	REF	20MHz reference signal for PLL, DPS (From PLL)
J1	1	GND	GND
EXT.SP	2	NC	
	3	NC	
	4		External speaker signal output
	5		Signal input when external speaker not connected
J2	1	GND	GND
Paddle	2	NC	
	3	NC	
	4	NC	
	5	DASH	Electronic keyer dash signal
	6	DOT	Electronic keyer dot signal
	7	NC	
	8	NC	
	9	NC	
	10	KEYS	Key switch signal
	11	KEYS	Open when using paddle
J4	1		GND
RTTY	2		RTTY signal
	3		GND
	4		RTTY signal
J5	1	NC	
ACC2	2	NC	
	3	ANO	RX audio output
	4	GND	ANO GND
	5	PSQ	Squelch open : GND, Squelch close : open
	6	SMET	S-meter voltage output
	7	NC	
	8	GND	GND
	9	PKS	Standby switch when using PKD input (Front panel microphone input is muted)
	10	NC	
	11	PKD	TX input
	12	GND	PKD GND
	13	SS	Standby switch

CN No.	Pin No.	Name	Function
J6	1	GND	GND
KEY	2	GND	GND
	3	KEYS	Key jack sensing signal
	4	NC	
	5	KEY	Key down signal
J7	1	GND	GND
COM	2	NC	
	3	TXD	RX data from personal computer
	4	RXD	TX data from TS-870S
	5	NC	
	6	NC	
	7	CTS	TX inhibit signal from TS-870S
	8	RTS	TX inhibit signal from personal computer
	9	NC	
LCD ASSY (B38-0736-05)			
CN1	1	GND	GND
	2	DIM	LCD dimmer control signal
	3	BLANK	LCD goes off control signal
	4	UCK1	LCD driver control serial clock
	5	UDA1	LCD driver control serial data
	6	ENL3	LCD driver control enable signal
	7	ENL2	LCD driver control enable signal
	8	14D	Digital 13.8V
	9	14D	Digital 13.8V
	10	5D	Digital 5V

TS-870S PC BOARD VIEWS

LCD ASSY (B38-0736-05)
Component side view

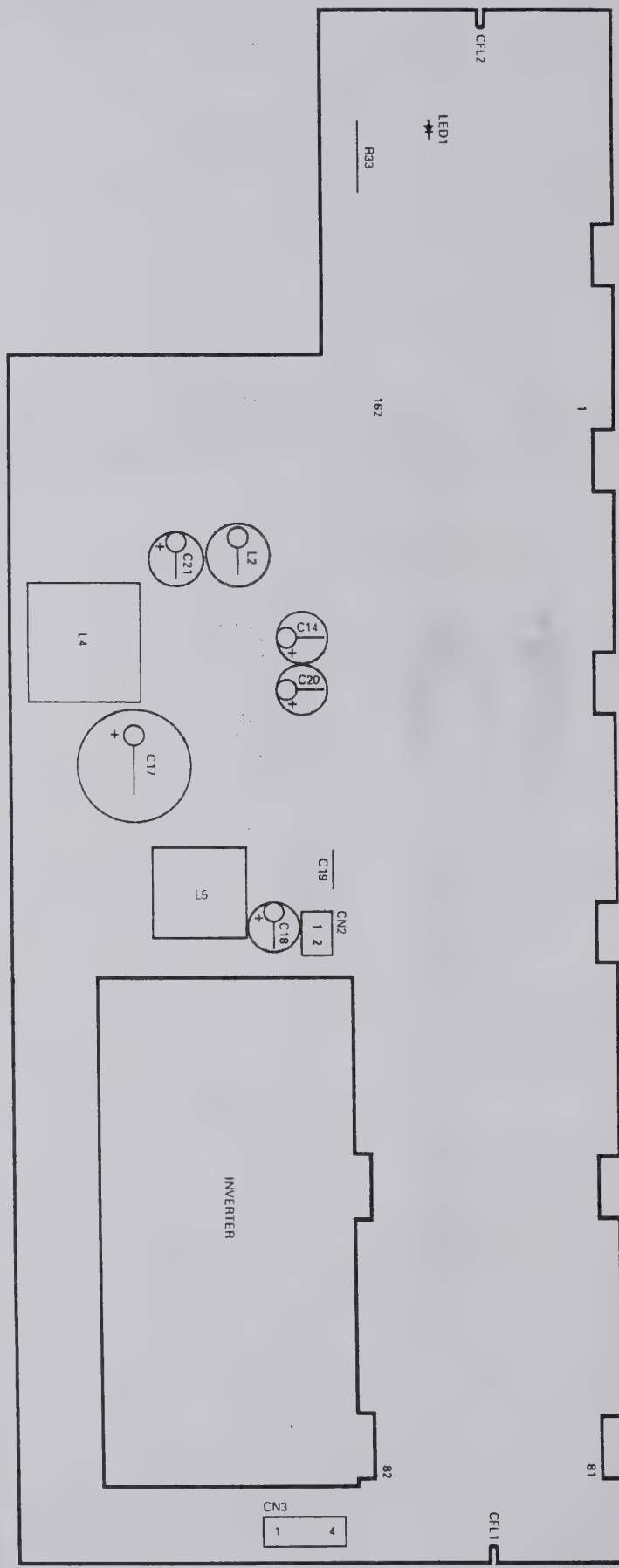

LCD ASSY (B38-0736-05)
Foil side view

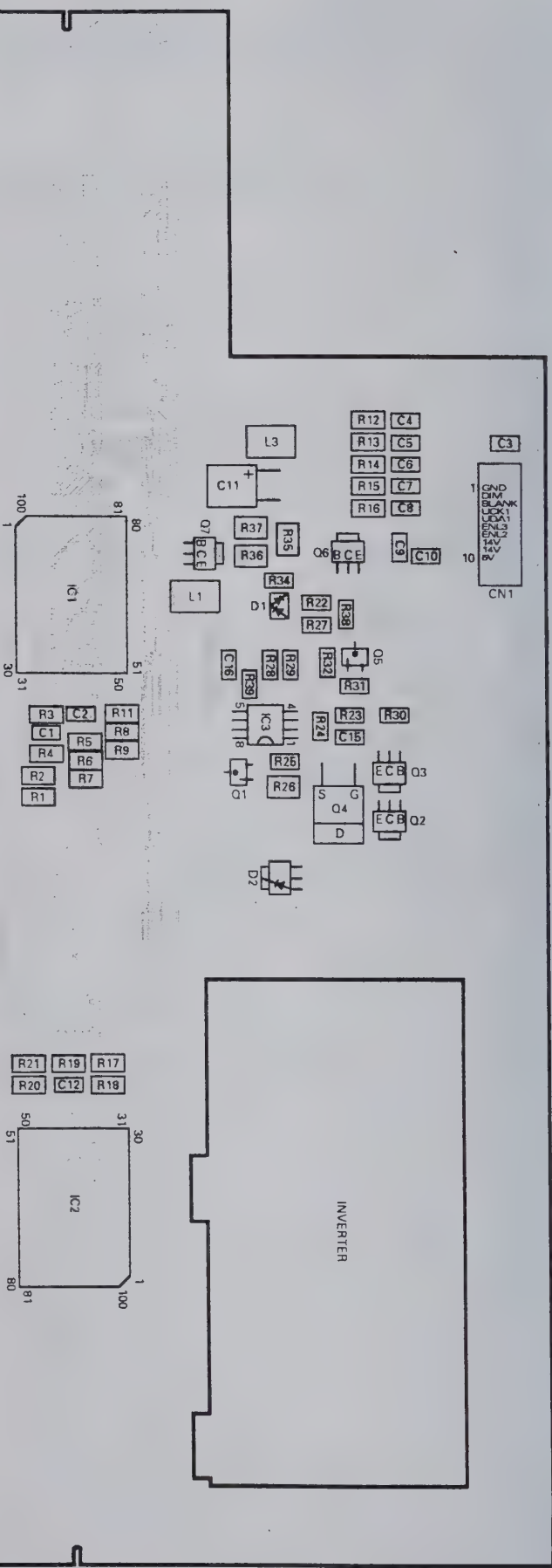

RF UNIT (X44-3210-00) (C/9)
Component side view

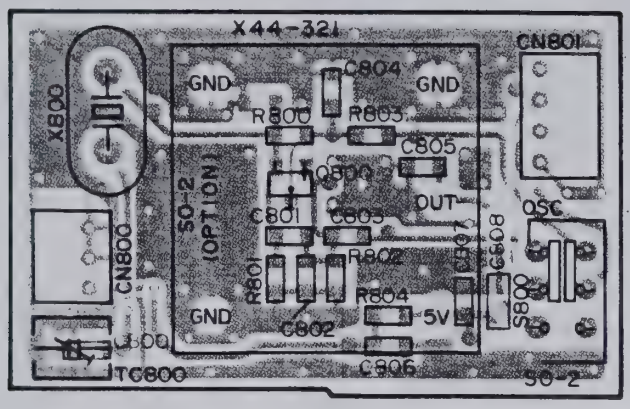

RF UNIT (X44-3210-00) (C/9)
Foil side view

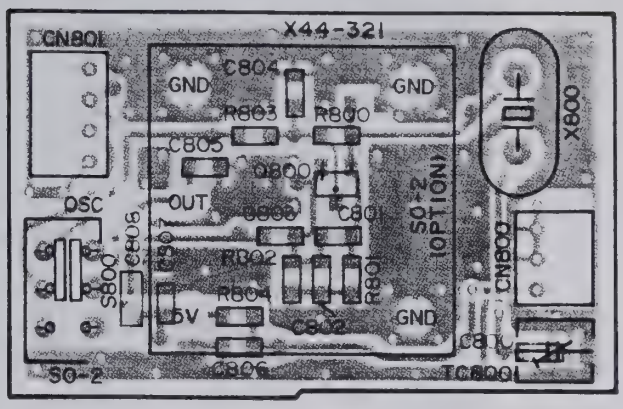

Component side
Foil side

VCO2 (X58-3390-03)
Component side view

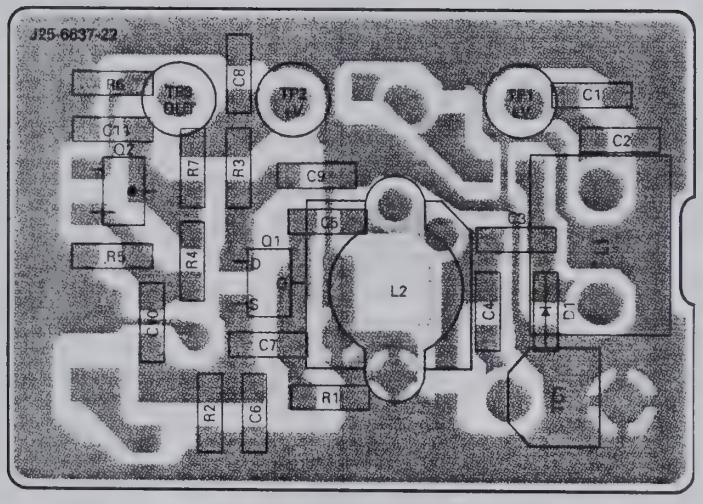

VCO2 (X58-3390-03)
Foil side view

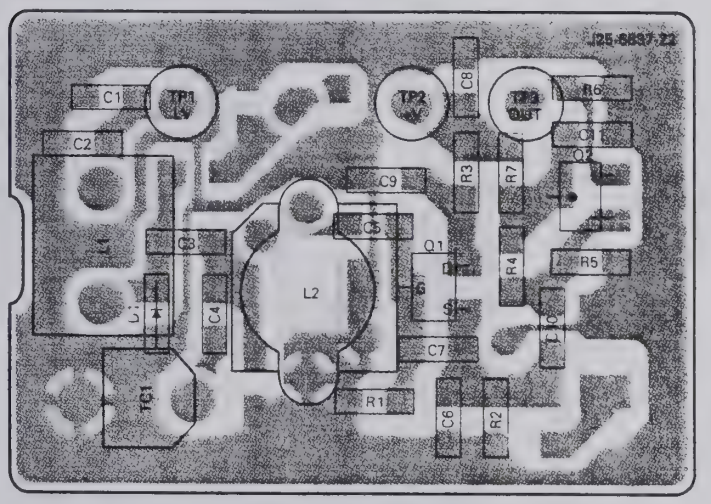

FINAL UNIT (X45-351X-XX) (A/5) : FINAL

Component side view

0-00 : K,P,M,M2,X
2-71 : E,E2,E3,E9

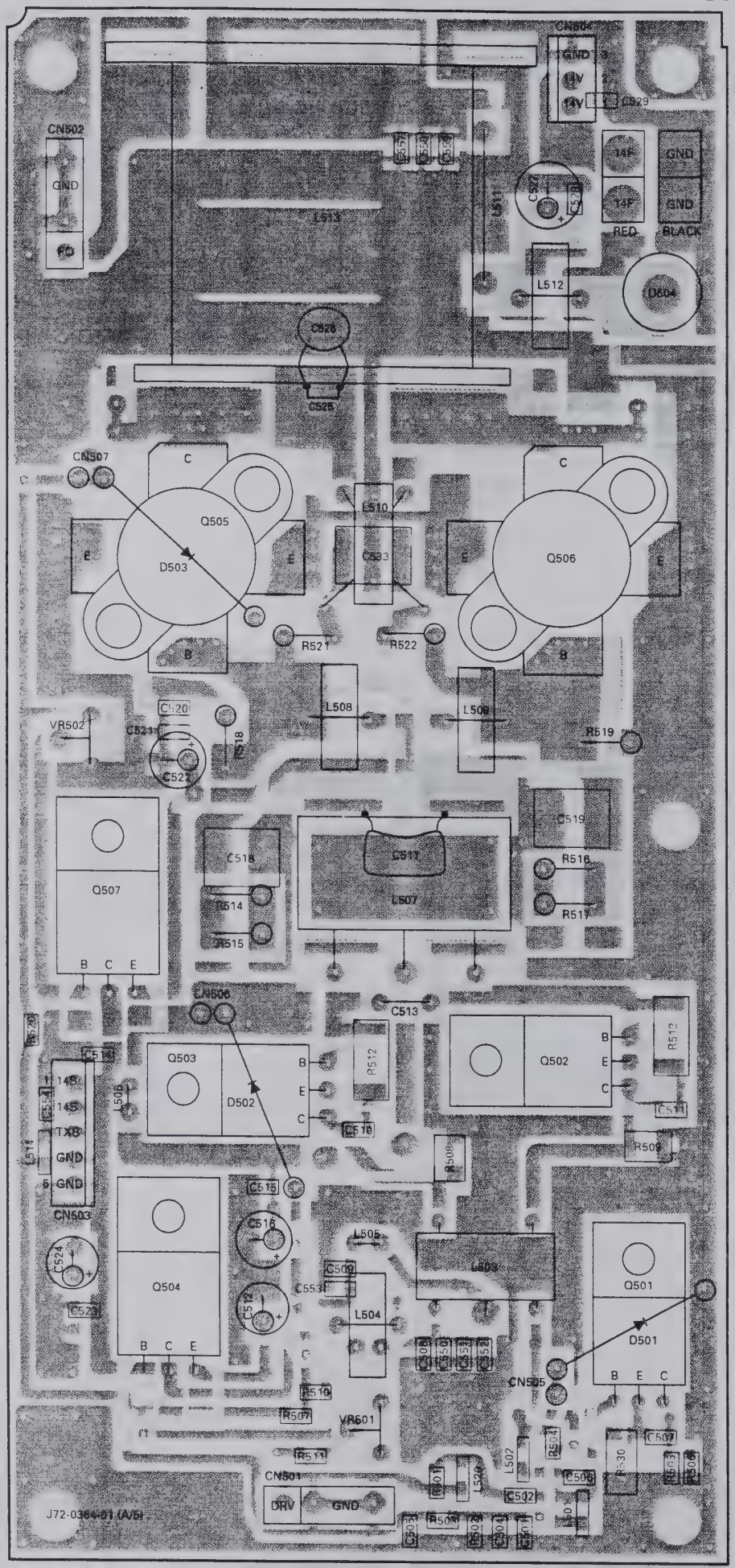

Component side
Foil side

FINAL UNIT (X45-351X-XX) (A/5) : FINAL

Foil side view

0-00 : K,P,M,M2,X

2-71 : E,E2,E3,E9

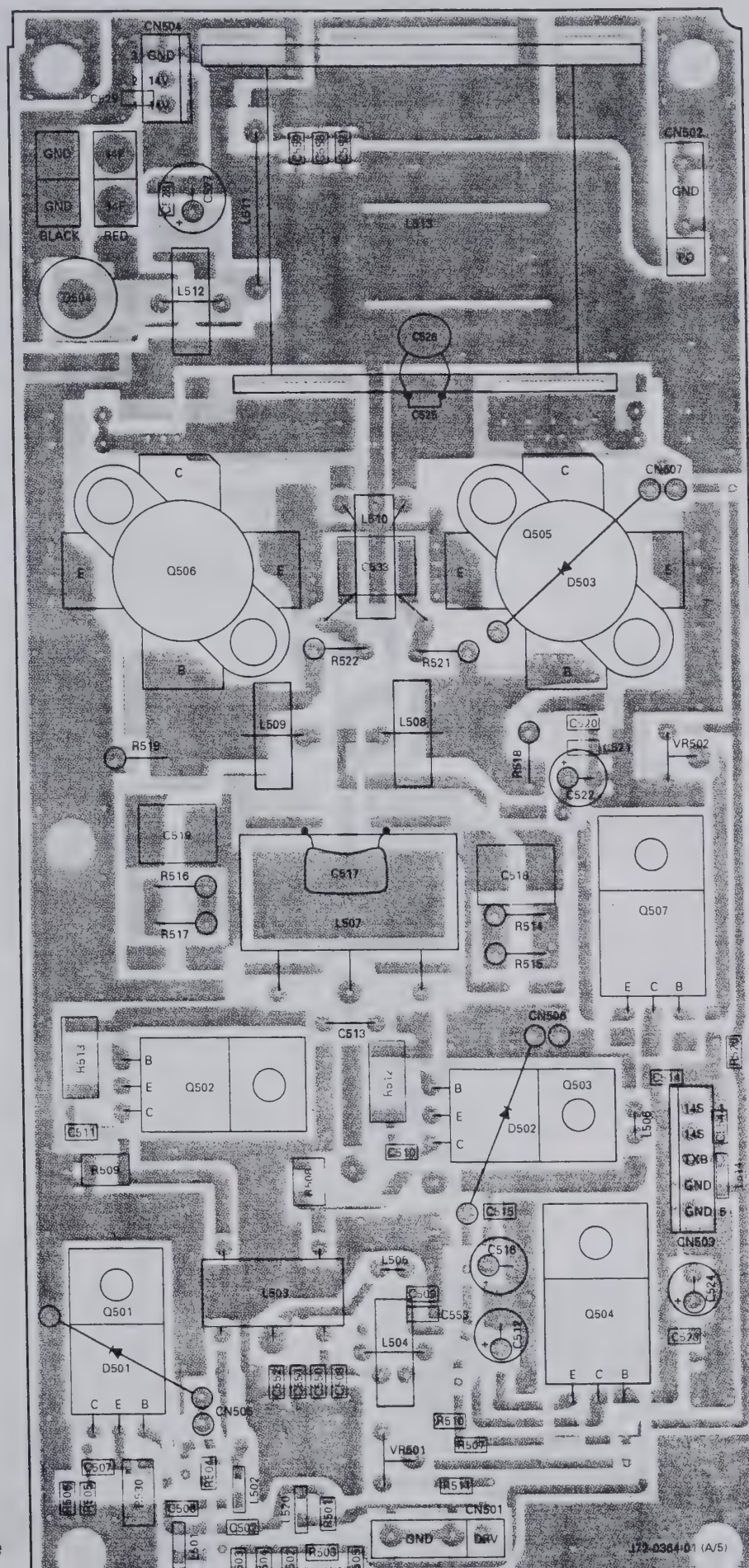

Component side

TS-870S PC BOARD VIEW

FINAL UNIT (X45-351X-XX) (B/5) : FILTER

Component side view 0-00 : K,P,M,M2,X 2-71 : E,E2,E3,E9

Component side
Foil side

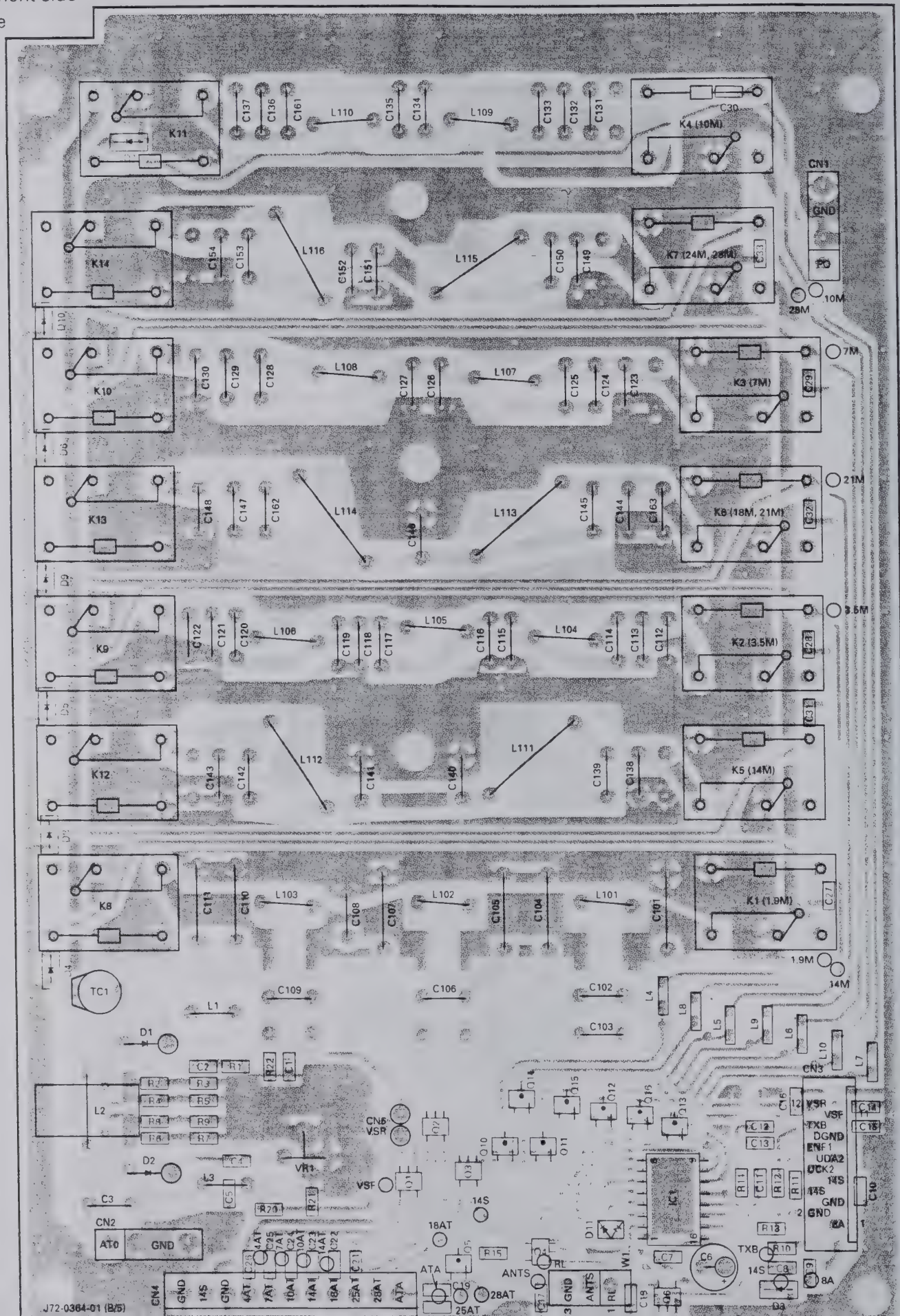

PC BOARD VIEW

FINAL UNIT (X45-351X-XX) (B/5) : FILTER

Foil side view 0-00 : K,P,M,M2,X 2-71 : E,E2,E3,E9

Component si
Foil side

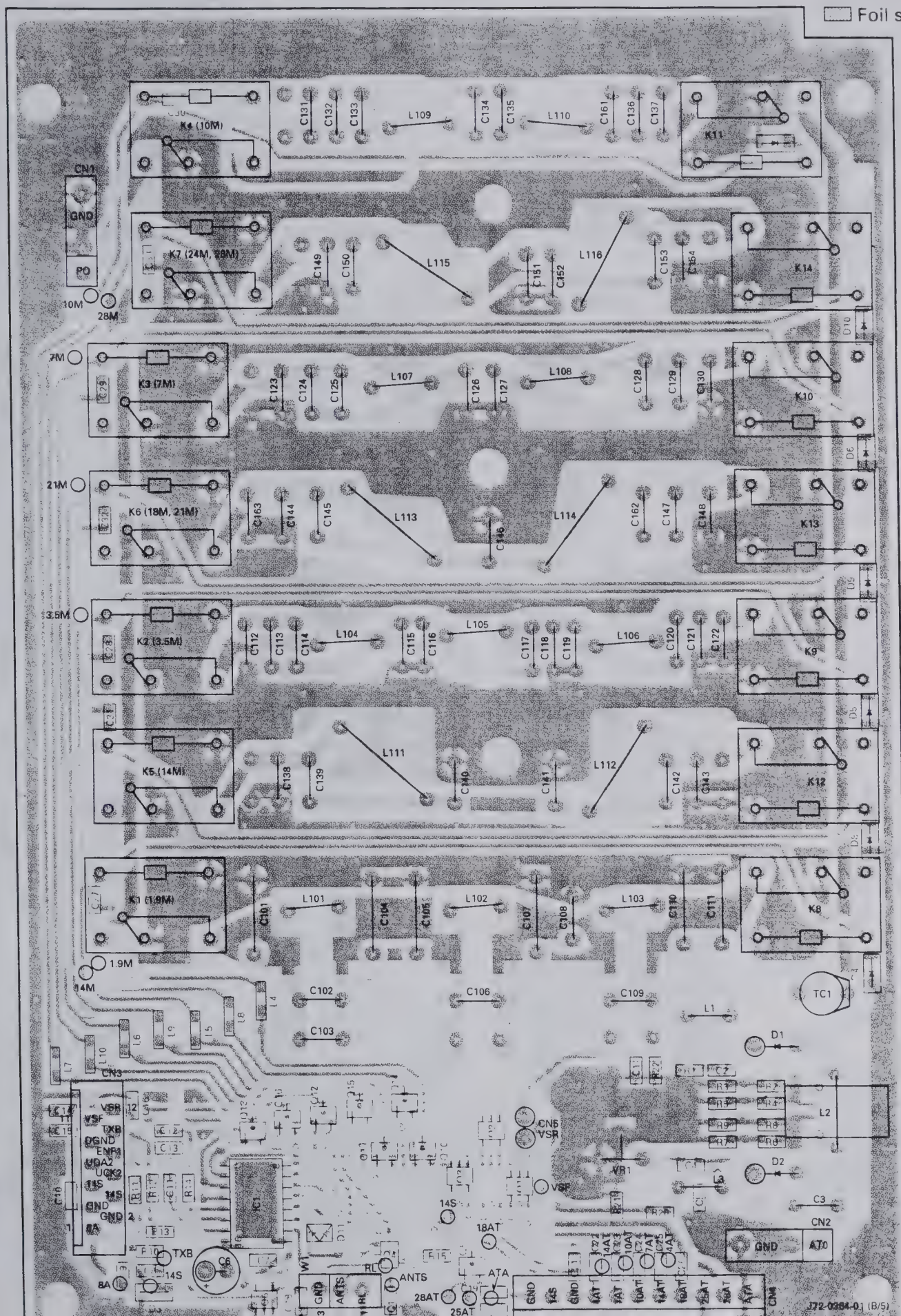

IS-870S PC BOARD VIEWS

FINAL UNIT
(X45-351X-XX) (D/5) : AVR
Component side view
0-00 : K,P,M,M2,X
2-71 : E,E2,E3,E9

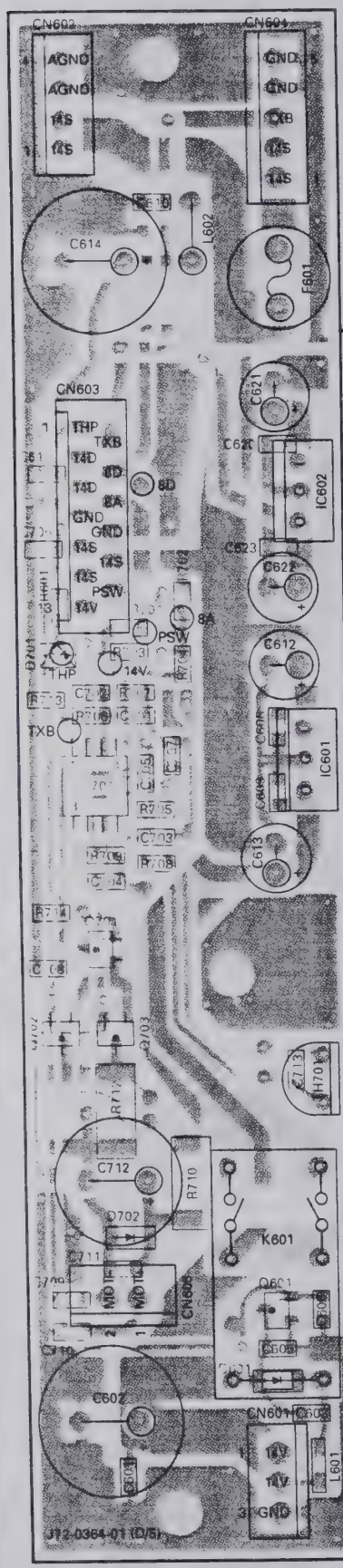

FINAL UNIT
(X45-351X-XX) (E/5)
: RELAY
Component side view
0-00 : K,P,M,M2,X
2-71 : E,E2,E3,E9

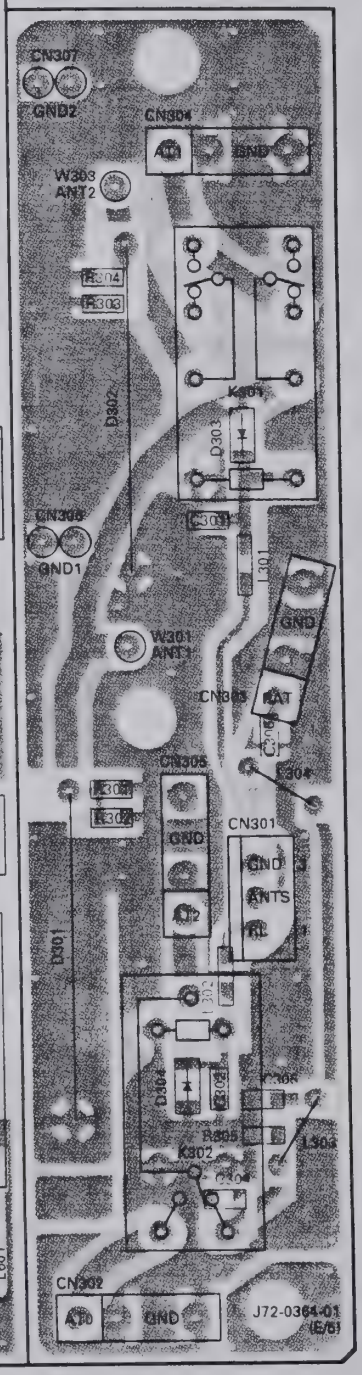

FINAL UNIT
(X45-351X-XX) (E/5)
: RELAY
Foil side view
0-00 : K,P,M,M2,X
2-71 : E,E2,E3,E9

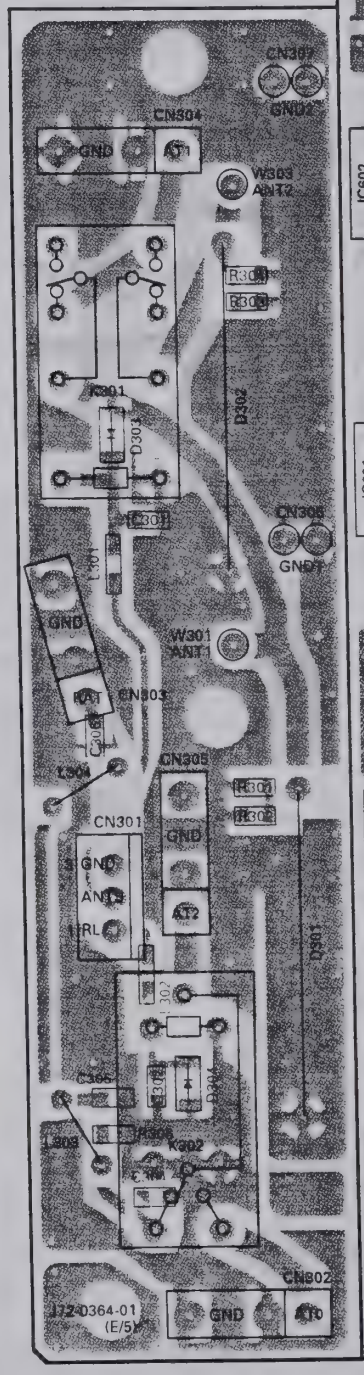

FINAL UNIT
(X45-351X-XX) (D/5) : AVR
Foil side view
0-00 : K,P,M,M2,X
2-71 : E,E2,E3,E9

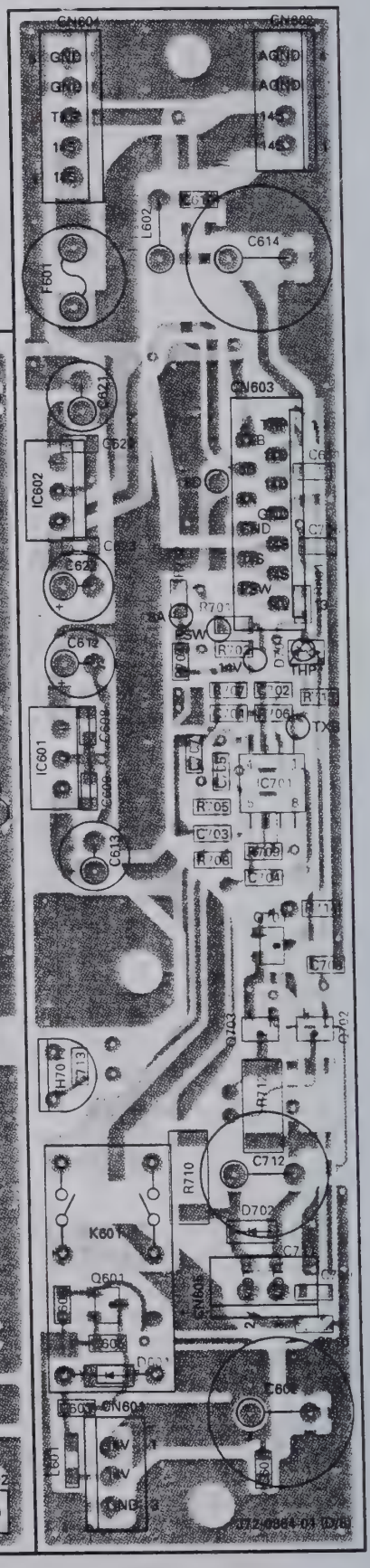

Component side
Foil side

TS-870S PC BOARD VIEWS

CONTROL UNIT (X53-356X-XX) (D/4) : MIC
Component side view
0-11 : K,P 0-21 : M 0-22 : M2 0-71 : X
2-71 : E 2-72 : E2 2-73 : E3 2-74 : E9

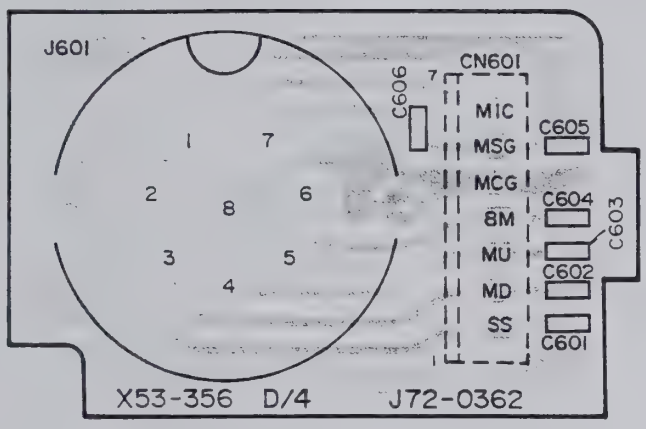

CONTROL UNIT (X53-356X-XX) (D/4) : MIC
Foil side view
0-11 : K,P 0-21 : M 0-22 : M2 0-71 : X
2-71 : E 2-72 : E2 2-73 : E3 2-74 : E9

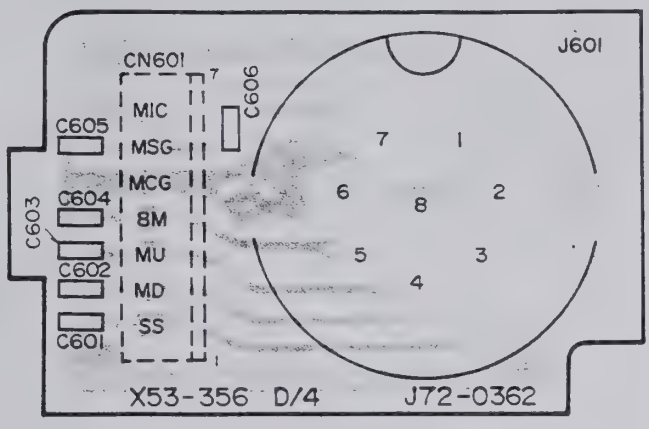

Component side
Foil side

PC BOARD VIEW TS-870S

FINAL UNIT (X45-351X-XX) (C/5)
: CONNECTION Foil side view

0-00 : K,P,M,M2,X
2-71 : E,E2,E3,E9

2SA1162
2SC2712

2SD1406

2SD1624

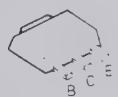

3SK131

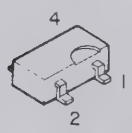

UPC7805H

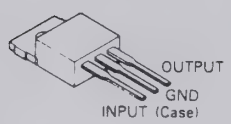

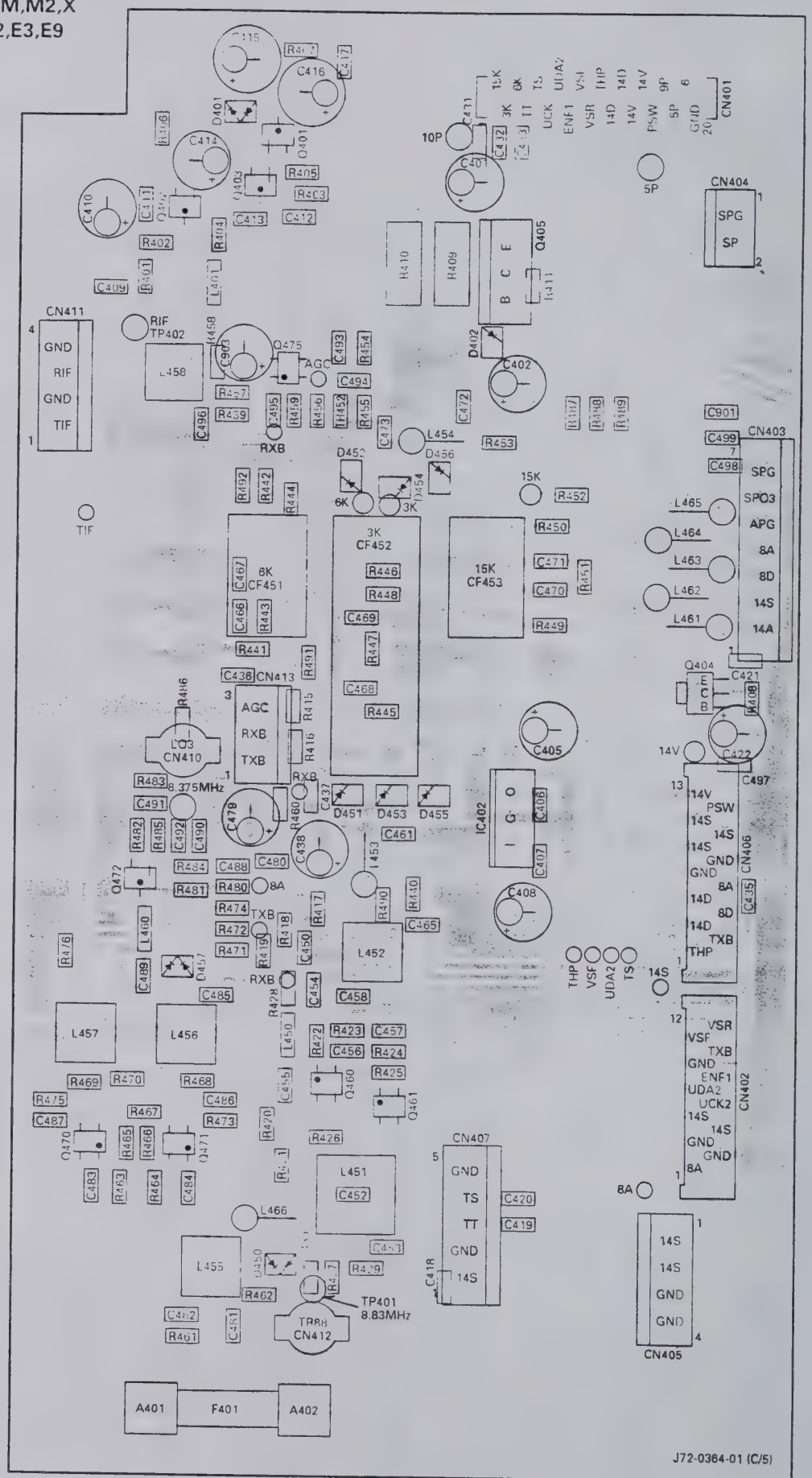

Component side
Foil side

DRU-3 (DIGITAL RECORDING UNIT)

DRU-3 Circuit Diagram

X43-3090-20

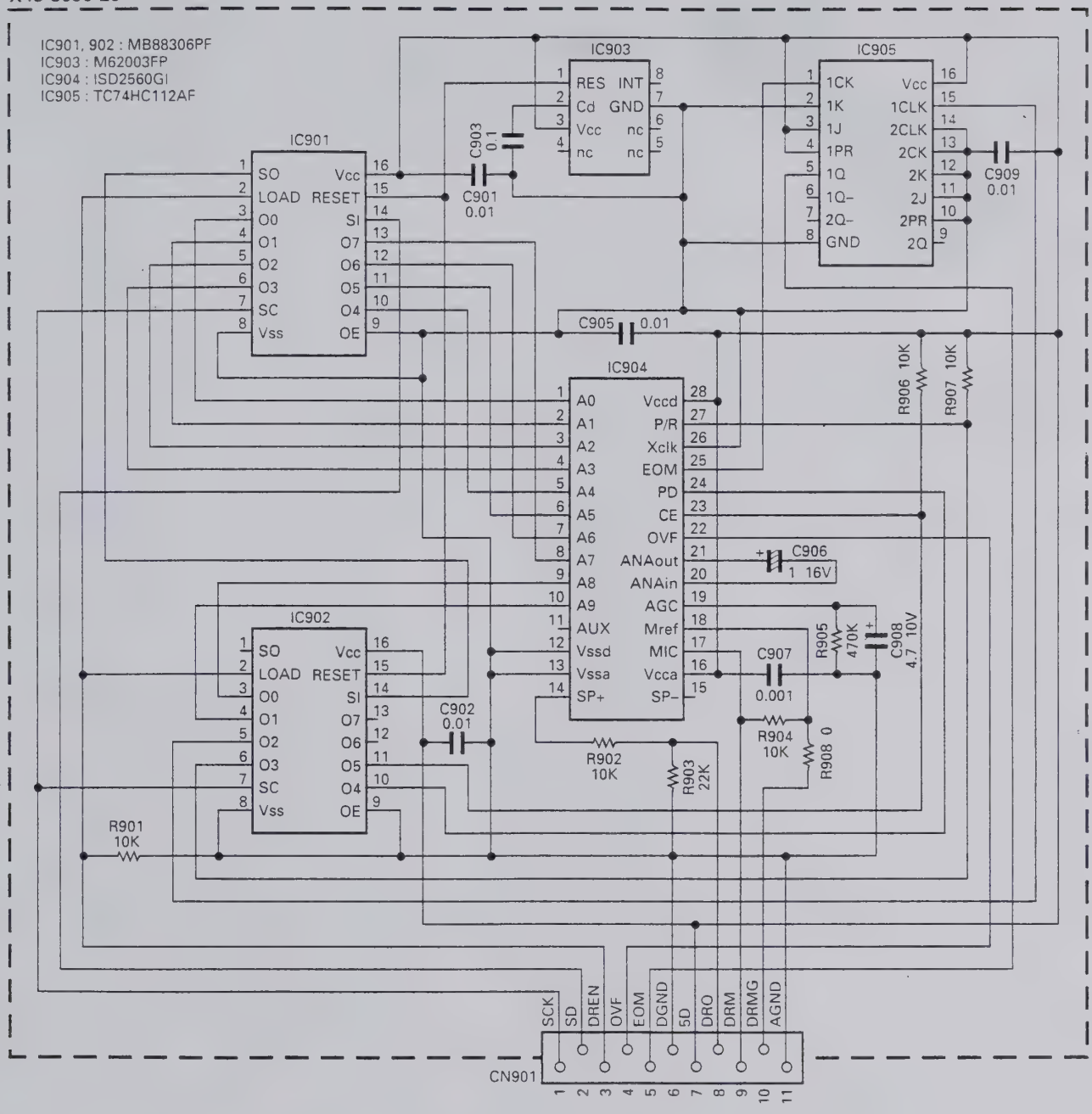

PG-2Z (DC CABLE)

PG-2Z External View

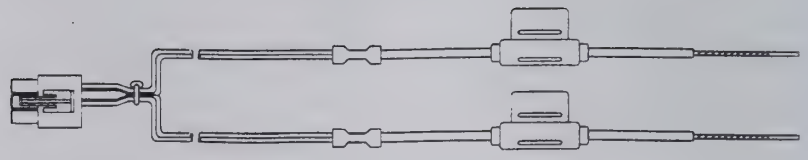

PG-2Z Parts List

Parts No.	New parts	Description
E30-3157-15		DC cable assy
F05-2531-05		Fuse (25A/32V)

SPECIFICATIONS

	Item			Rating
GENERAL	Mode			J3E (LSB, USB), A1A (CW), A3E (AM), F3E (FM), F1D (FSK)
	Number of memory channels			100
	Antenna impedance			50Ω (With Antenna Tuner 20 to 150Ω)
	Supply voltage			DC 13.8V ± 15%
	Grounding method			Negative ground
	Current	Transmit (Max.)		20.5A
		Receive (No signal)		2A
	Usable temperature range			–10°C to +50°C (+14°F to +122°F)
	Frequency stability (–10°C to +50°C)			Within ±10PPM
	Frequency accuracy (At room temperature)			Within ±10PPM
	Dimensions (W x H x D) (Projections included)			330 x 120 x 334 mm/13.0 x 4.72 x 13.1 in (339 x 135 x 375 mm/13.3 x 5.31 x 14.8 in)
	Weight			Approx. 11.5kg (25lbs)
TRANSMITTER	Frequency range	160m band		1.8*1 to 2.0*2MHz
		80m band		3.5 to 4.0*3MHz
		40m band		7.0 to 7.3*4MHz
		30m band		10.1 to 10.15MHz
		20m band		14.0 to 14.35MHz
		17m band		18.068 to 18.168MHz
		15m band		21.0 to 21.45MHz
		12m band		24.89 to 24.99MHz
		10m band		28.0 to 29.7MHz
	Output power*5	SSB, CW, FSK, FM	Max.	100W
			Min.	20W or less
		AM	Max.	25W
			Min.	20W or less
	Modulation	SSB		Balanced
		FM		Reactance
		AM		Low level
	Spurious emissions			–60dB or less
	Carrier suppression			50dB or more
	Unwanted sideband suppression (Modulation frequency 1.0kHz)			50dB or more
	Maximum frequency deviation (FM)	Wide		±5kHz or less
		Narrow		±2.5kHz or less
	Transmit frequency characteristics (–6dB) (TX lower cutoff : 300Hz, TX bandwidth : 2.3kHz)			300 to 2600Hz
	XIT shift frequency range			±9.99kHz
	Microphone imppedance			600Ω

*1 1.81MHz : Europe, France, Holland; 1.83MHz : Belgium, Spain

*2 1.85MHz : Belgium, France, Holland, Spain

*3 3.8MHz : Europe, Belgium, France, Holland, Spain

*4 7.1MHz : Europe, Belgium, France, Holland, Spain

*5 Belgium, Spain : 10W fixed on 160m band

TS-870S

SPECIFICATIONS

	Item			Rating
RECEIVER	Circuit type			Quadruple conversion superheterodyne
	Frequency range			100kHz to 30MHz
	Intermediate frequency			1st : 73.05MHz, 2nd : 8.83MHz, 3rd : 455kHz, 4th : 11.3kHz
	Sensitivity	SSB, CW, FSK (At 10dB (S+N)/N)	100kHz to 500kHz	1μV or less
			500kHz to 1.62MHz*6	4μV or less
			1.62MHz*6 to 24.5MHz	0.2μV or less
			24.5MHz to 30MHz	0.13μV or less
		AM (At 10dB (S+N)/N)	100kHz to 500kHz	2μV or less
			500kHz to 1.62MHz*6	31.6μV or less
			1.62MHz*6 to 24.5MHz	2μV or less
			24.5MHz to 30MHz	2μV or less
		FM (At 12dB SINAD)	28MHz to 30MHz	0.25μV or less
	Selectivity	SSB Lo : 300Hz, Hi : 2600Hz		–6dB : 2.3kHz, –60dB : 3.3kHz
		CW Width : 200Hz		–6dB : 200Hz, –60dB : 450Hz
		FSK Width : 500Hz		–6dB : 500Hz, –60dB : 1000Hz
		AM Lo : 100Hz, Hi : 4000Hz		–6dB : 9kHz, –60dB : 12kHz
		FM Width : 14kHz		–6dB : 14kHz, –60dB : 18kHz
	Image rejection (1.8MHz to 30MHz)			80dB or more
	1st IF rejection (1.8MHz to 30MHz)			80dB or more
	Notch filter atteneuation			40dB or more
	RIT shift frequency range			±9.99kHz
	Squelch sensitivity	SSB, CW, FSK, AM	100kHz to 500kHz	2μV or less
			500kHz to 1.62MHz*6	20μV or less
			1.62MHz*6 to 30MHz	2μV or less
		FM	28MHz to 30MHz	0.25μV or less
	Audio output (8Ω, 10% distortion)			1.5W or more
	Audio output impedance			8Ω

*6 1.705MHz : Canada, U.S.A.

Specifications are subject to change without notice or obligation due to ongoing technological developments.

KENWOOD CORPORATION
14-6, Dogenzaka 1-chome, Shibuya-ku, Tokyo 150, Japan

KENWOOD SERVICE CORPORATION
P.O. BOX 22745, 2201 East Dominguez Street, Long Beach, CA 90801-5745, U.S.A.

KENWOOD ELECTRONICS LATIN AMERICA S.A.
P.O. BOX 55-2791 Piso 6 Plaza Chase Cl. 47 y Aquilino de la Guardio Panama, Republic of Panama

KENWOOD ELECTRONICS CANADA INC.
6070 Kestrel Road, Mississauga, Ontario, Canada L5T 1S8

KENWOOD ELECTRONICS DEUTSCHLAND GMBH
Rembrücker Str. 15, 63150 Heusenstamm, Germany

KENWOOD ELECTRONICS BENELUX N.V.
Mechelsesteenweg 418 B-1930 Zaventem, Belgium

TRIO-KENWOOD FRANCE S.A.
13, Boulevard Ney, 75018 Paris, France

TRIO-KENWOOD U.K. LIMITED
KENWOOD House, Dwight Road, Watford, Herts , WD1 8EB United Kingdom

KENWOOD ELECTRONICS NEDERLAND B.V.
Amsterdamseweg 35, 1422 AC Uithoorn, The Netherlands

KENWOOD ELECTRONICS ITALIA S.p.A.
Via G Sirtori, 7/9 20129 Milano, Italy

KENWOOD IBERICA S.A.
Bolivia, 239-08020 Barcelona, Spain

KENWOOD ELECTRONICS AUSTRALIA PTY. LTD.
(A.C.N. 001 499 074)
P O. Box 504, 8 Figtree Drive, Australia Centre, Homebush, N.S.W. 2140, Australia

KENWOOD & LEE ELECTRONICS, LTD.
Unit 3712-3724, Level 37, Tower one Metroplaza, 223 Hing Fong Road, Kwai Fong, N T , Hong Kong

HF TRANSCEIVER

TS-870S

SERVICE MANUAL

KENWOOD

© 1995-8 PRINTED IN JAPAN
B51-8296-00(N) 1360

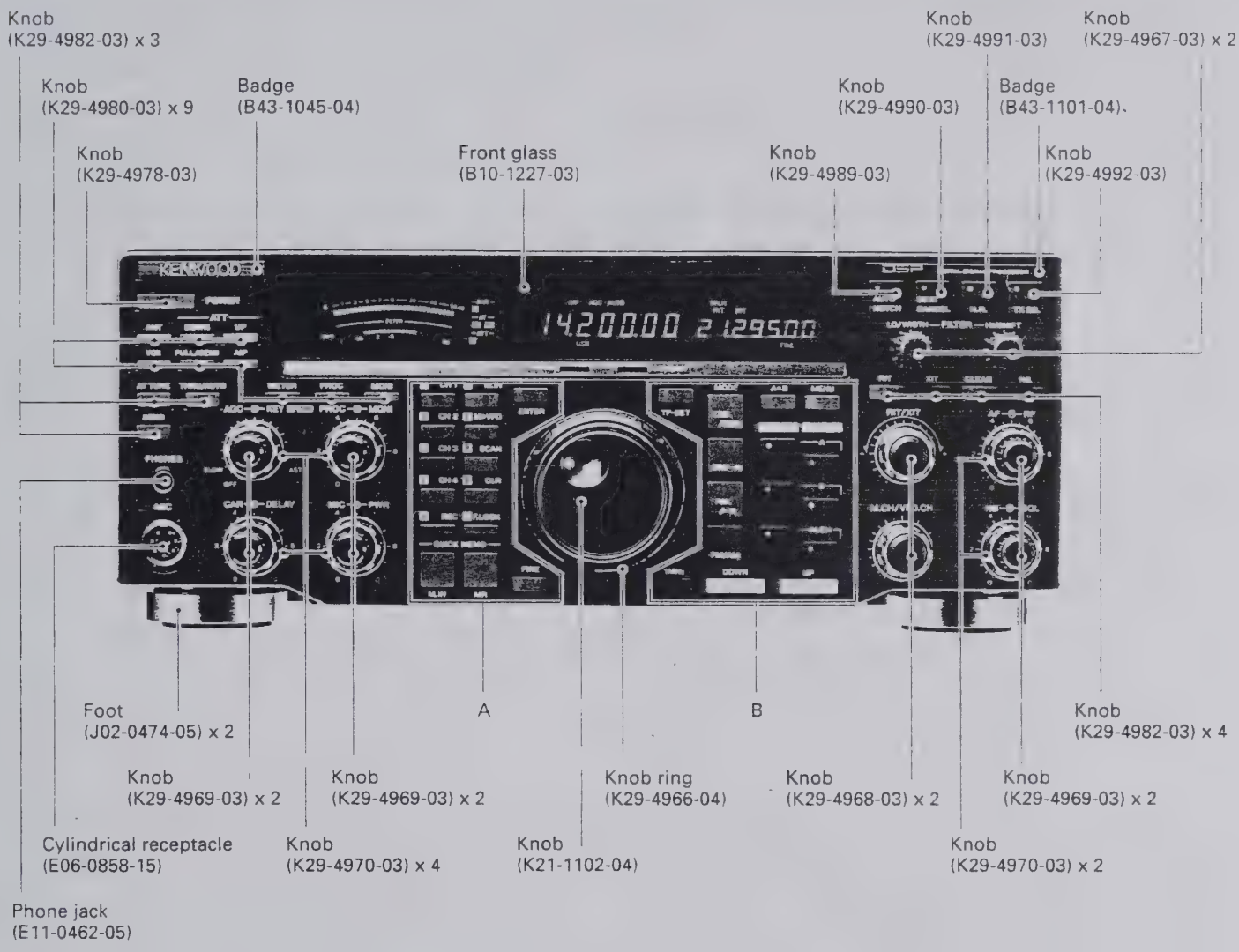

A

Knob (K29-4982-03)	Knob (K29-4982-03)	Knob (K29-4982-03)
Knob (K29-4982-03)	Knob (K29-4982-03)	
Knob (K29-4982-03)	Knob (K29-4982-03)	
Knob (K29-4982-03)	Knob (K29-4982-03)	
Knob (K29-4980-03)	Knob (K29-4980-03)	
Knob (K29-4984-03)	Knob (K29-4984-03)	Knob (K29-4982-03)

B

Knob (K29-4982-03)	Knob (K29-4985-03)	Knob (K29-4982-03)	Knob (K29-4982-03)
	Knob (K29-4986-03)	Knob (K29-4983-03)	Knob (K29-4981-03)
	Knob (29-4987-03)	Knob (K29-4983-03)	Knob (K29-4981-03)
	Knob (K29-4988-03)	Knob (K29-4983-03)	Knob (K29-4981-03)
Knob (K29-4982-03)	Knob (K29-4979-03)	Knob (K29-4979-03)	

CONTENTS

CIRCUIT DESCRIPTION 3
DESCRIPTION OF COMPONENTS 45
SEMICONDUCTOR DATA 53
PARTS LIST 58
EXPLODED VIEW 81
PACKING 88
ADJUSTMENT 89
TERMINAL FUNCTION 104
CIRCUIT DIAGRAMS / PC BOARD VIEWS
- LCD ASSY (B38-0736-05) 110
- RF UNIT (X44-3210-00) (A/9) : RF 113
- RF UNIT (X44-3210-00) (B/9) : PLL 117
- RF UNIT (X44-3210-00) (C/9) 127
- VCO2 (X58-3390-03) 127
- FINAL UNIT (X45-351X-XX) (A/5) : FINAL 128
- FINAL UNIT (X45-351X-XX) (B/5) : FILTER 130
- FINAL UNIT (X45-351X-XX) (D/5) : AVR 132
- FINAL UNIT (X45-351X-XX) (E/5) : RELAY 132
- AT UNIT (X53-3340-02) (A/2) 137
- AT UNIT (X53-3340-02) (B/2) 139
- CONTROL UNIT (X53-356X-XX) (A/4) : CONTROL 143
- CONTROL UNIT (X53-356X-XX) (B/4) : SW 147
- TX-RX UNIT (X57-4620-00) 155
- RF UNIT (X44-3210-00) (D/9) 169
- RF UNIT (X44-3210-00) (E/9) 169
- RF UNIT (X44-3210-00) (F/9) 170
- RF UNIT (X44-3210-00) (G/9) 170
- RF UNIT (X44-3210-00) (H/9) 171
- RF UNIT (X44-3210-00) (I/9) 171
- FINAL UNIT (X45-351X-XX) (C/5) : CONNECTION 172
- CONTROL UNIT (X53-356X-XX) (D/4) : MIC 174

SCHEMATIC DIAGRAM 175
BLOCK DIAGRAM 179
LEVEL DIAGRAM 183
DRU-3 (DIGITAL RECORDING UNIT) 185
PG-2Z (DC CABLE) 188
SPECIFICATIONS 189

CIRCUIT DESCRIPTION

Frequency Configuration

The TS-870S is quadruple conversion in receive mode. As a transmitter, it is quadruple conversion in non-FM modes and double conversion in FM mode.

The fourth 11.3kHz IF signal is converted from analog to digital, connected to the DSP in receive mode, and decoded. In transmit mode, the microphone input signal is converted from analog to digital and applied to the DSP. It is converted from digital to analog, passed through a mixer, and becomes the 455kHz TIF signal. In FM mode, however, only 455kHz carriers are output from the DSP.

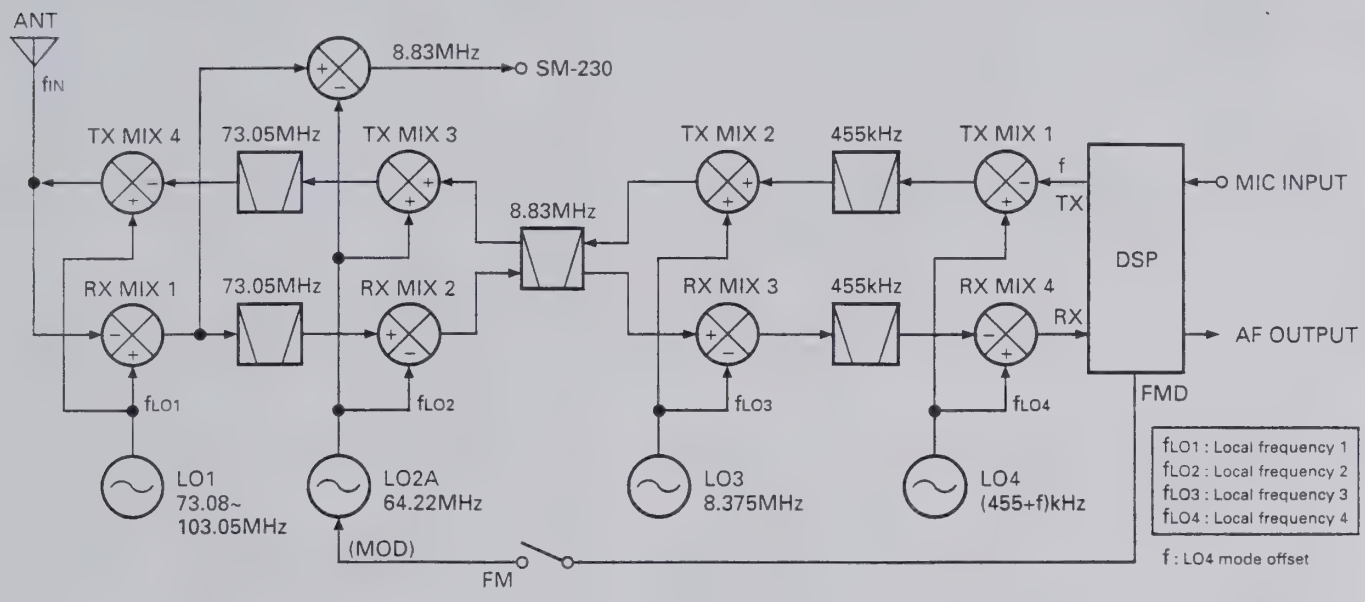

Fig. 1 Frequency configutation

■ Frequency configuration

When the receiver frequency by fIN from the antenna in SSB mode is zero beat (namely, at zero to the SSB signal with a carrier point of fIN), the relationship between these signals is expressed by the following equation.

$$f_{IN} = f_{LO1} - f_{LO2} - f_{LO3} - f_{LO4} + f \quad \ldots . (1)$$

Since all these frequencies are generated by the PLL or DDS circuits as shown in the PLL block diagram in Figure 2, the receiver frequency is determined only by the reference frequency fSTD, the PLL dividing ratio and DDS data. Therefore, the reference frequency accuracy equals the operating frequency accuracy.

The accuracy of the reference oscillator used in the TS-870S is 10ppm (–10 to +50°C). If the temperature-compensated crystal oscillator (TCXO) SO-2 is used, the accuracy becomes 0.5ppm (–10 to +50°C).

The TS-870S local oscillator and CAR DDS are independent of each other. However, they can be operated like a cancel loop configuration by changing the CAR and local oscillator PLL data simultaneously via a microprocessor. This function allows a shift (fLO1, fLO3, fLO4) by the mode change to be performed and the band width of the slope tune to be varied (fLO1, fLO3, fLO4).

When used as a transmitter in SSB mode or in other modes, likewise the frequency is determined by the reference frequency fSTD and dividing ratio. The display frequencies in the modes are listed in Table 1. In the FSK mode, the TS-870S displays the mark transmitter frequency.

In CW mode, the TS-870S receiving pitch can be changed to the required frequency in 50Hz steps with the desired signal remaining in the center of the IF filter band-pass (Variable CW pitch system). Since the receiving pitch varies along with the transmitter side tone, it is possible to zero-beat by receiving the desired signal at the same pitch as the side tone.

FM transmission is obtained in this system by modulating the f_{LO2} via application of the audio signal from the microphone to the VCO2.

Mode	Display frequency
USB, LSB	Carrier point frequency
CW	Transmission carrier frequency
FSK	Mark transmitter frequency
AM, FM	IF filter center frequency

Table 1 Display frequency in each mode

PLL Circuit

The TS-870S PLL circuit consists of a PLL loop that includes DDS covering a frequency range between 30kHz to 30MHz in 10Hz or 1Hz steps in accordance with the 20kHz reference frequency; DDS that generates other local oscillators (LO3, LO4); and a PLL loop that produces LO2A.

The dividing ratio data to each PLL loop and the DDS data are controlled by a microprocessor. Each loop is controlled by a single crystal frequency control system according to the reference frequency f_{STD}. (See the PLL block diagram in Figure 2.)

■ Reference signal generation circuit

The reference frequency f_{STD} used for frequency control is determined by the 20MHz crystal oscillator (X800 and Q800 : 2SC2714). One reference frequency is output as the reference signal f_{REF} for the PLL and DDS in the PLL section. The other is sent to the TX-RX unit and used as the PLL reference signal for the PLL and DSP.

The crystal oscillator may be replaced by an optional TCXO (SO-2), and the TCXO may be switched to with slide switch S800.

If the optional TCXO (SO-2) is installed, the S800 switch must be set to the SO-2 position.

■ LO2 (PLL section)

Q1 : 2SK508NV in VCO2 (A501 : X58-3390-03) generates 64.22MHz. The 20MHz reference frequency f_{REF} is applied to pin 15 of IC509 : MB86001PF, and is divided internally by a factor of 1000 (4000 in FM mode) to produce a 20kHz (5kHz in FM mode) comparison frequency.

The VCO2 output is applied to pin 6 of IC509 : MB86001PF, and is internally divided by a factor of 3211 (12844 in FM mode). It is compared with the 20kHz (5kHz in FM mode) signal using the phase comparator. The VCO2 frequency is locked. The division ratio is transmitted from the control unit.

The output from PLL2 is passed through buffer Q539, amplified by amplifier Q532, passed through a low-pass filter, its impedance is converted, and is then output to the RF section as LO2A.

■ LO1 (PLL loop)

Four VCOs and uses Q520 to Q523 : 2SK508NV x 4 to generate 73.08MHz to 103.05MHz. The 20MHz reference frequency f_{REF} is applied to pin 15 of PLL IC IC507 : MB86001PF, and is internally divided by a factor of 20 to produce a 1MHz comparison frequency. The output is passed through amplifier Q524, and a band-pass filter. One output is passed through buffer Q526 : 2SC2996 and a low-pass filter and goes to the RF section.

The other output signal is passed through buffer Q525 : 2SC2714 and applied to pin 5 of mixer IC508 : SN76514. A signal of 54.54 to 55.54MHz is input to pin 11 of IC508 and converted to a signal of 18.0 to 48.0MHz. This signal is output from pin 13. The signal is passed through a high-pass filter, a low-pass filter, and amplifier Q531 : 2SC2714 and Q530 : 2SC2712, and goes to pin 6 of PLL IC IC507 : MB86001PF.

This signal is internally divided by N, and compared with the 1MHz signal using the phase comparator. The mixer output frequency is locked in 1MHz steps. The division ratio N is transmitted from the control unit as data (N : 18 to 48) corresponding to 0MHz to 30MHz in 1MHz steps. One of the four VCOs is selected according to the VCO change signal (VB0 to VB3) sent from the control unit.

CIRCUIT DESCRIPTION

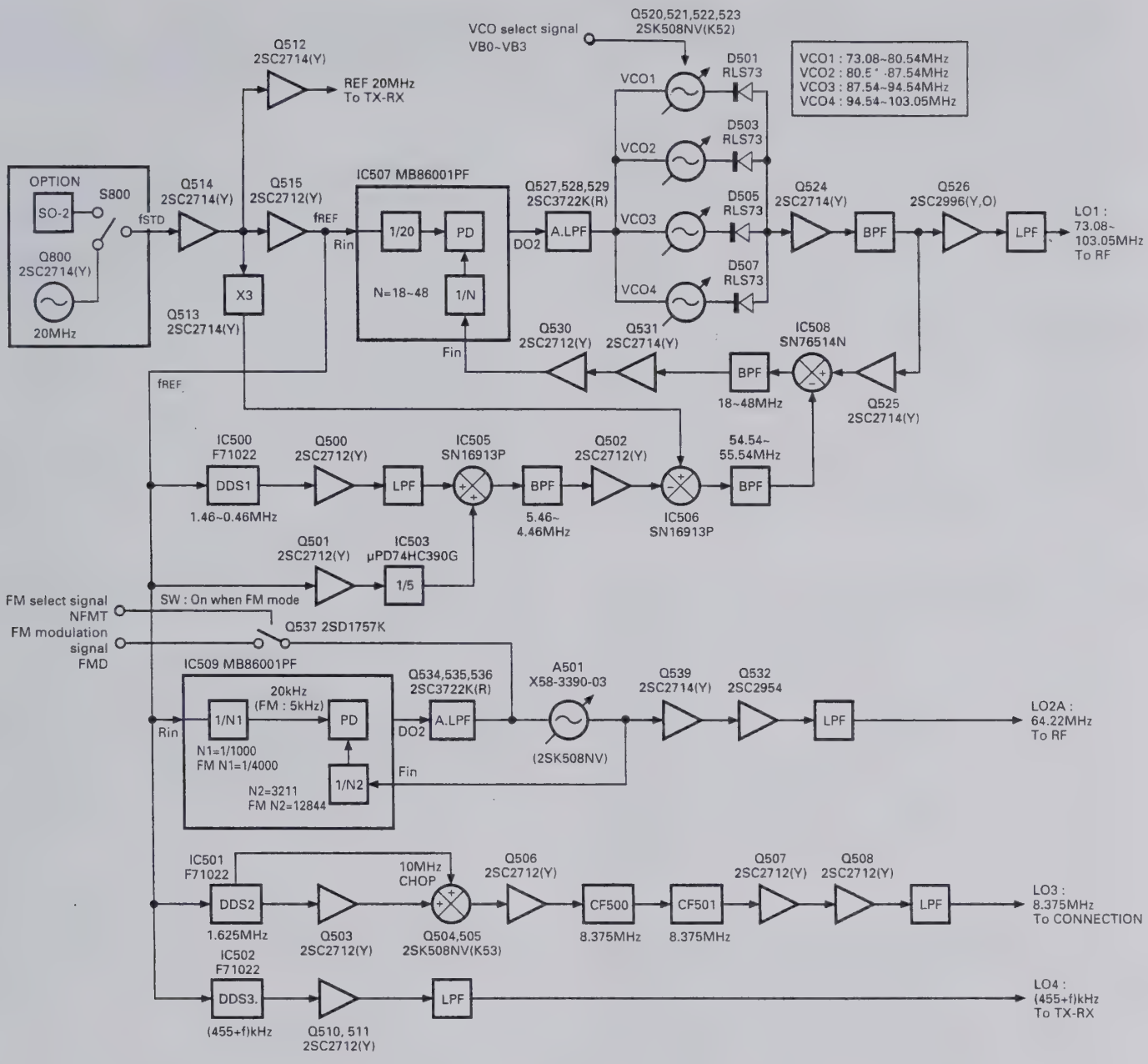

Fig. 2 PLL block diagram

CIRCUIT DESCRIPTION

DDS1 (IC500 : F71022) generates 1.46 to 0.46MHz digital signals. They are converted to analog signals by a digital to analog converter (consisting of CP500, CP501, and Q500), passed through a low-pass filter, and fed to pin 5 of mixer IC505 : SN16913P. The 4MHz signal produced by division of 20MHz reference frequency fREF by divider IC503 : UPD74HC390G by a factor of 5 is input to pin 2 of the mixer IC505, and a 5.46 to 4.46MHz signal is output from pin 1. The output signal is passed through a band-pass filter and buffer Q502, and input to pin 5 of mixer IC506 : SN16913P. The 60MHz signal obtained by tripling 20MHz reference frequency fREF via multiplying circuit Q515 is mixed, and a 54.54 to 55.54MHz signal is output. This signal is passed through a band-pass filter, and goes to pin 13 of mixer IC508.

DDS1 sweeps the 1.46 to 0.46MHz digital signal output in 10 or 1Hz steps, and LO1 covers the 73.08 to 103.05MHz signal in 10 or 1Hz steps and is output to the RF section.

■ LO3 generation

DDS2 (IC501 : F71022) generates a digital signal of the 1.625MHz basic frequency. It is converted to an analog signal by a digital-to-analog converter (consisting of CP502, CP503, and Q503), and chopped by a circuit consisting of Q503 to Q505 so as to extract an 8.375MHz primary harmonic component. Unwanted components are removed by a ceramic filter consisting of CF500 and CF501. The resulting signal is passed through amplifier Q507, buffer Q508, and a low-pass filter, and output to the connection section (final unit) as the LO3 signal.

■ LO4 generation

DDS3 (IC502 : F71022) generates a (455+f) kHz digital signal. It is converted to an analog signal by a digital to analog converter (consisting of CP504, CP505, and Q510), passed through buffer Q511 and a low-pass filter, and output to the TX-RX unit as the LO4 signal.

The LO4 signal is a local oscillator signal used to generate a DSP processing signal f from 455kHz. The f frequency is described in the local signal section (page 14).

■ Subtone generation

During FM transmission, the DSP generates a signal to which a subtone is added and is then sent to the main unit as it is.

■ PLL data

The TS-870S has three PLLs to which the main CPU sends PLL data based on the displayed frequency.

- PLL comprising a VFO (PLL section)
- Local oscillator PLL for frequency conversion (PLL section)
- PLL that generates timing clocks for digital signal processing (TX-RX unit)

The VCOs change with the following conditions.

- Main encoder change → VCO1 (PLL section)
- Mode change → VCO2 (PLL section)

Each PLL IC outputs an unlock signal. If any PLL is unlocked, the main display indicates "....." (dots). If the unlocked PLL is the TX-RX unit, the sub-display shows "Err-FD", and if it is the PLL unit, it shows "Err-FE" to indicate that it is unlocked.

The unlocking of each PLL is output to pin 11 (UL) of PLL IC : MB86001PF as unlock data (UNLOCK : LOW).

Loop	VCO No.	IC No.	Comparison frequency/divide ratio	Variable divide ratio	Frequency (MHz)
LO1	VCO1	IC507	1MHz/20	18~48	73.08~103.05
LO2	VCO2	IC509	20kHz/1000 5kHz/4000 : FM	3211 12844 : FM	64.22

CIRCUIT DESCRIPTION

■ DDS circuit configuration

The DDS IC has been developed with standard cells to implement a high-speed operation circuit and large-capacity ROM at a low cost.

1) IC configuration

The IC consists of the following components:

Two 28 bit registers for setting frequency data, one 28 bit frequency shift register for addition to the frequency register, a 23 bit parallel signal input section for frequency modulation with a parallel signal, and a data entry and selection section.

Frequency modulation section comprised of a 28 bit adder that adds frequency data and frequency modulation data

Phase data operation section that adds data from the frequency modulation section with the 28 bit phase data register

SIN-ROM that converts phase data to sine data.

2) Frequency/shift data setting

Using serial signals synchronized with clock pulses, a total of 30 bits (2 bits that specify the destination to which data are set and 28 bits for frequency data) are set in three internal registers.

3) Frequency register selection

The data set in the two frequency registers are selected by the SLAB input of the DDS IC. This pin handles the TXC signal. This function eliminates the need for the TS-870S microprocessor to set frequency data for each transmission and reception.

4) Frequency data selection

The SPSL input of the DDS IC selects whether to use the data in the internal frequency shift register or the data from parallel input as frequency modulation data.

5) Frequency modulation

The MDEN input of the DDS IC enables or disables frequency modulation. When frequency modulation is enabled, frequency data is added, and the result is input to the phase data operation section.

6) Phase data operation

The target frequency phase data is output by accumulating 28 bit frequency data in the 28 bit phase accumulator.

$Fout = Fs/2^{28} \cdot Dsum$

Fs : DDS IC input frequency/2

Dsum : Frequency data+Frequency modulation data

If 2^{25} is set for Dsum when 1/8 Fs is output, the phase data must be increased by $\pi/8$.

A 28 bit absolute value operation has been used here, but a 28 bit signed operation can also be used, assuming that the MSB is a sign. If complement data of 8000000 to FFFFFFFF (hex) is set, the phase moves in the negative direction for the positive data.

7) SIN-ROM

Phase data from the phase data operation section is converted to sine data of 0000 to FFFF (hex) in the 16 bit offset binary format.

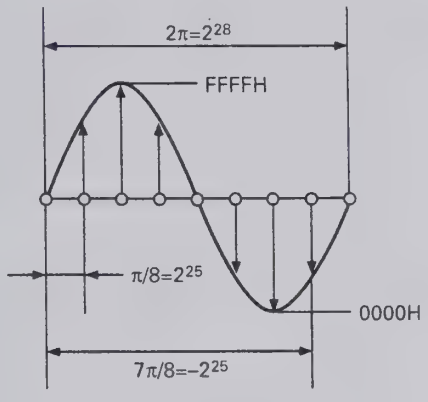

CIRCUIT DESCRIPTION

Receiver Circuit

The basic configuration of the receiver circuit is quadruple conversion. After the frequency is converted to the 11.3kHz fourth IF, the DSP carries out AGC, filtering, detection, and signal processing. Figure 3 is a receiver block diagram.

The signal coming from the antenna connector is passed through the antenna switching relay (K301) in the final unit (E/5 relay section), the antenna tuner unit, and the transmit/receive changeover relay (K302) within the relay section, and then goes to the CN2 (RAT) of the RF unit (A/9 RF section).

The signal input to the RF unit is passed through protection lamp PL1 for strong signal input, external receiver power distribution circuit L1 and L2 and switching circuit K1, and is input to the ATT (–6dB, –12dB) circuit. This distribution circuit is switched when the EXT RX (function that distributes the signals from the antenna to the external receiver), which is set from menu No.53, is turned ON. When this function is ON, the signal from the antenna is attenuated by about 4dB and output to the receiver section in the subsequent stage and the EXT RX terminal on the rear. The signal to the EXT RX terminal is passed through lamp PL2 for protection during transmission. The lamp turns OFF when about 10W is input.

The signal is passed through the ATT switching circuit, then goes to the BC band attenuation circuit (L7 to L9, C19 to C22). The BC band signal is attenuated by 5 to 10dB to prevent power saturation of the band-pass filter switching diode resulting from interference from a proximate station. The band-pass filter consists of two low-pass filters and 10 band-pass filters, and passes signals during transmission. The pin diode (1SV128) is used to change the input to raise the signal saturation level when a HIGH signal is input.

The RF amplifier circuit functions as a low-gain amplifier using Q14 and Q15 : 2SK2218(5) x 2 when the frequency is 21.49MHz or lower, and it functions as a high-gain amplifier using Q13 : 3SK131(M) when the frequency is higher than 21.49MHz. It is bypassed when AIP is ON.

The 73.05MHz first IF signal is generated by quad mixer Q17 to Q20 : 2SK520(K44) x 4. It is passed through XF1 73.05MHz MCF, Q24 : 3SK131(M) first mixer amplifier, and Q26 and Q27 : 2SK520(K43) mixer to produce a 8.83MHz second IF signal. The second IF signal is divided into two signals, one of which is branched to the noise blanker, amplified by amplifier Q28, and then goes to the NB circuit. The other signal is input to the second IF signal amplifier, and serves as a blanking gate by the NB and RBK signals. The amplified second IF signal is passed through the 8.83MHz IF filter, and output to the final unit (C/5 connection section) from CN10. This signal is switched with the diode switch D62 and D68, and functions as a second IF signal output during reception and a third IF signal input during transmission.

The second IF signal input to CN412 in the final unit (C/5 connection section) is routed to the receiver circuit by D450, and input to the mixer Q460 and Q461 to generate a 455kHz third IF signal. It is passed through the 455kHz IF filter, amplified by third IF amplifier Q475, and output by CN411 to the TX-RX unit as RIF signal. The total gain of the receiver unit is adjusted by VR1 in the TX-RX unit.

CIRCUIT DESCRIPTION

■ IF filter

The IF filter consists of a DSP digital filter. If there is a HIGH signal outside the DSP filter band, the analog to digital converter input level may be saturated, and the filter does not work properly. Thus, an analog filter is inserted between the second IF (8.83MHz) and the third IF (455kHz) so that it does not impair the DSP filter properties. To operate each filter properly, there are three kinds of filters for each IF signal and also slope tuning is carried out.

1) Filters characteristics

Item	Rating
Nominal center frequency	73.05MHz
Pass bandwidth	±7.5kHz or more at 3dB
Attenuation bandwidth	±30kHz or less at 40dB
Ripple	1.0dB or less
Insertion loss	3.0dB or less
Guaranteed attenuation	70dB or more at fo + (500 to 1000kHz) 70dB or more at fo – (200 to 1000kHz)
Center frequency deviation	Within ±1.5kHz at 3dB
Terminating impedance	2kΩ ± 10%

MCF (L71-0401-05) : RF unit XF1

Item	Rating
Nominal center frequency	8830kHz
Center frequency deviation	Within ±150Hz at 6dB
Pass bandwidth	±1.5kHz or more at 6dB
Attenuation bandwidth	±1.9kHz or less at 20dB ±2.75kHz or less at 60dB ±3.5kHz or less at 80dB
Ripple	2dB or less
Insertion loss	6dB or less
Guaranteed attenuation	80dB or more in the range ±3.5kHz to ±1MHz
Terminating impedance	600Ω / 15pF

MCF (L71-0235-05) : RF unit XF2

Item	Rating
Nominal center frequency	8830kHz
Pass bandwidth	±3.0kHz or more at 6dB
Attenuation bandwidth	±16.0kHz or less at 60dB ±13.0kHz or less at 50dB
Guaranteed attenuation	70dB or more with in fo ± 1MHz (Without sourious in the range fo to fo+500kHz)
Ripple	Within 1.0dB
Insertion loss	Within 1.5dB
Terminating impedance	1850kΩ / 2pF

MCF (L71-0266-05) : RF unit XF3

Item	Rating
Nominal center frequency	8.400MHz
3dB attenuation bandwidth	Within 180 ± 40kHz
20dB attenuation bandwidth	400kHz or less
Insertion loss	9.0dB or less Formula : 20 x log [E1÷ (2 x E2)]
Ripple	1.0dB or less (within 3dB band)
Spurious attenuation	25dB or more (6.0 to 10.0MHz)
Voltage capacity	50V DC (1 minute)
Insulating resistance	100MΩ or more (100V DC)
Input and output impedance	330Ω

Ceramic filter (L72-0343-05) : RF unit CF500, 501

Item	Rating
Nominal center frequency	455kHz
6dB bandwidth	±3kHz (455kHz)
50dB bandwidth	±9kHz (455kHz)
Ripple	2dB or less (within 455+2kHz)
Insertion loss	6dB or less
Guaranteed attenuation	60dB or more (within 455±100kHz)
Input and output impedance	2.0kΩ

Ceramic filter (L72-0319-05) : Final unit CF451

Item	Rating
Center frequency	455±0.20kHz
6dB bandwidth	2.9 to 3.2kHz
60dB bandwidth	4.7kHz or less
Guaranteed attenuation	60dB or more at 0.1 to 1MHz
Spurious	40dB or more at 600 to 700kHz
6dB band ripple	2dB or less
Insertion loss	6dB or less
Input and output impedance	2kΩ

Ceramic filter (L72-0333-05) : Final unit CF452

Item	Rating
Nominal center frequency	455kHz
6dB bandwidth	±7.5kHz or more (455kHz)
50dB bandwidth	±15kHz or less (455kHz)
Ripple	3dB or less (within 455+5kHz)
Insertion loss	6dB or less
Guaranteed attenuation	35dB or more (within 455±100kHz)
Input and output impedance	1.5kΩ

Ceramic filter (L72-0366-05) : Final unit CF453

CIRCUIT DESCRIPTION

Receiver Circuit

The basic configuration of the receiver circuit is quadruple conversion. After the frequency is converted to the 11.3kHz fourth IF, the DSP carries out AGC, filtering, detection, and signal processing. Figure 3 is a receiver block diagram.

The signal coming from the antenna connector is passed through the antenna switching relay (K301) in the final unit (E/5 relay section), the antenna tuner unit, and the transmit/receive changeover relay (K302) within the relay section, and then goes to the CN2 (RAT) of the RF unit (A/9 RF section).

The signal input to the RF unit is passed through protection lamp PL1 for strong signal input, external receiver power distribution circuit L1 and L2 and switching circuit K1, and is input to the ATT (–6dB, –12dB) circuit. This distribution circuit is switched when the EXT RX (function that distributes the signals from the antenna to the external receiver), which is set from menu No.53, is turned ON. When this function is ON, the signal from the antenna is attenuated by about 4dB and output to the receiver section in the subsequent stage and the EXT RX terminal on the rear. The signal to the EXT RX terminal is passed through lamp PL2 for protection during transmission. The lamp turns OFF when about 10W is input.

The signal is passed through the ATT switching circuit, then goes to the BC band attenuation circuit (L7 to L9, C19 to C22). The BC band signal is attenuated by 5 to 10dB to prevent power saturation of the band-pass filter switching diode resulting from interference from a proximate station. The band-pass filter consists of two low-pass filters and 10 band-pass filters, and passes signals during transmission. The pin diode (1SV128) is used to change the input to raise the signal saturation level when a HIGH signal is input.

The RF amplifier circuit functions as a low-gain amplifier using Q14 and Q15 : 2SK2218(5) x 2 when the frequency is 21.49MHz or lower, and it functions as a high-gain amplifier using Q13 : 3SK131(M) when the frequency is higher than 21.49MHz. It is bypassed when AIP is ON.

The 73.05MHz first IF signal is generated by quad mixer Q17 to Q20 : 2SK520(K44) x 4. It is passed through XF1 73.05MHz MCF, Q24 : 3SK131(M) first mixer amplifier, and Q26 and Q27 : 2SK520(K43) mixer to produce a 8.83MHz second IF signal. The second IF signal is divided into two signals, one of which is branched to the noise blanker, amplified by amplifier Q28, and then goes to the NB circuit. The other signal is input to the second IF signal amplifier, and serves as a blanking gate by the NB and RBK signals. The amplified second IF signal is passed through the 8.83MHz IF filter, and output to the final unit (C/5 connection section) from CN10. This signal is switched with the diode switch D62 and D68, and functions as a second IF signal output during reception and a third IF signal input during transmission.

The second IF signal input to CN412 in the final unit (C/5 connection section) is routed to the receiver circuit by D450, and input to the mixer Q460 and Q461 to generate a 455kHz third IF signal. It is passed through the 455kHz IF filter, amplified by third IF amplifier Q475, and output by CN411 to the TX-RX unit as RIF signal. The total gain of the receiver unit is adjusted by VR1 in the TX-RX unit.

CIRCUIT DESCRIPTION

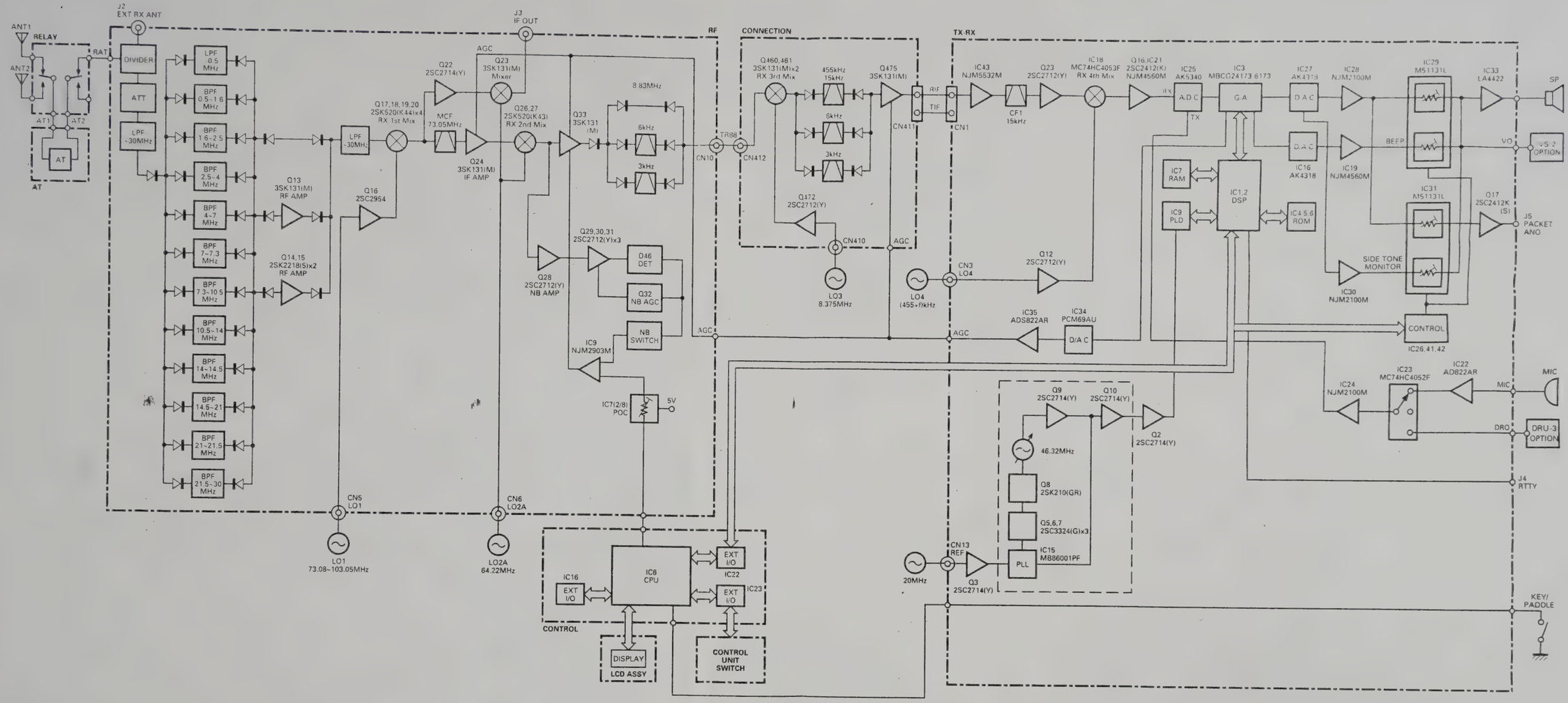

Fig. 3 Receiver block diagram

CIRCUIT DESCRIPTION

■ IF gain correction

The total gain changes when the AIP is turned ON or OFF or the band is 21.49MHz or higher. To limit the changes, the DSP corrects the IF gain. Table 2 lists the corrections. When the "AIP S-meter correction" on menu No.11 is turned ON, the S-meter is corrected when the AIP is turned ON. And since the IF gain is corrected greatly, the receiver internal noise output becomes large.

Frequency	Correction (dB)			Pre-amp gain (dB) reference
	AIP			
	OFF	ON1 (Menu 11 OFF)	ON2 (Menu 11 ON) SSB, CW, FSK only	
30kHz~ 21.49MHz	–2	0	+12	15
21.49MHz~ 30.MHz	–7	0	+12	21

Table 2 IF gain corrections

■ NB circuit

The noise blanker, like the conventional one, branches the signal before the narrow-band filter of the 8.83MHz second IF, and detects noise, and performs blanking using the second IF amplifier as a gate. The signal is amplified by Q28, detected by the AGC amplification and noise detection circuit consisting of Q29 to Q32 and D46, and then a blanking pulse is generated by the IC9 comparator. The noise detection circuit Q29 to Q32 and D46 is separated into segments by a jumper in the unit to prevent sneak path.

■ Slope tune

The operating principle of SSB-SLOPE-TUNE is explained first. When f_{LO1}, f_{LO3}, and f_{LO4} in Figure 4 are at their normal frequencies, the synthesized bandwidth is indicated by A. If the f_{LO1} frequency is increased by $\Delta f1$ and the f_{LO3} frequency is decreased by $\Delta f1$, the filter of the 8.83MHz band shifts to position B. The synthesized bandwidth is indicated by the section overlapped by A and B. When the frequencies of f_{LO1} and f_{LO3} are lowered by $\Delta f2$, only the 455kHz second IF filter shifts to position C. The synthesized bandwidth is indicated by the section overlapped by B and C.

Therefore, high frequencies are cut off by increasing the f_{LO1} frequency and decreasing the f_{LO3} frequency. Low frequencies are cut off by decreasing the f_{LO3} and f_{LO4} frequencies. The TS-870S enables these operations using the DSP filter.

In SSB mode, slope tune high cut/low cut is switched by using the filter select control : in CW mode, the WIDTH (bandwidth)/SHIFT (center frequency) is changed, and in FSK mode, the WIDTH (bandwidth) is changed. The microcomputer in the control unit sends filter select data to the DSP, and slope tuning is carried out by changing frequency data given to the PLL and DDS. The second IF (8.83MHz) and third IF (455kHz) filters are selected to carry out slope tuning effectively. Tables 3 and 4 list filter selections, slope tuning and analog filter high cut/low cut amounts. Slope tuning low cut/high cut can be switched in AM mode, and the WIDTH can be switched in FM mode by using DSP filters only, and the analog filter is fixed to 15kHz.

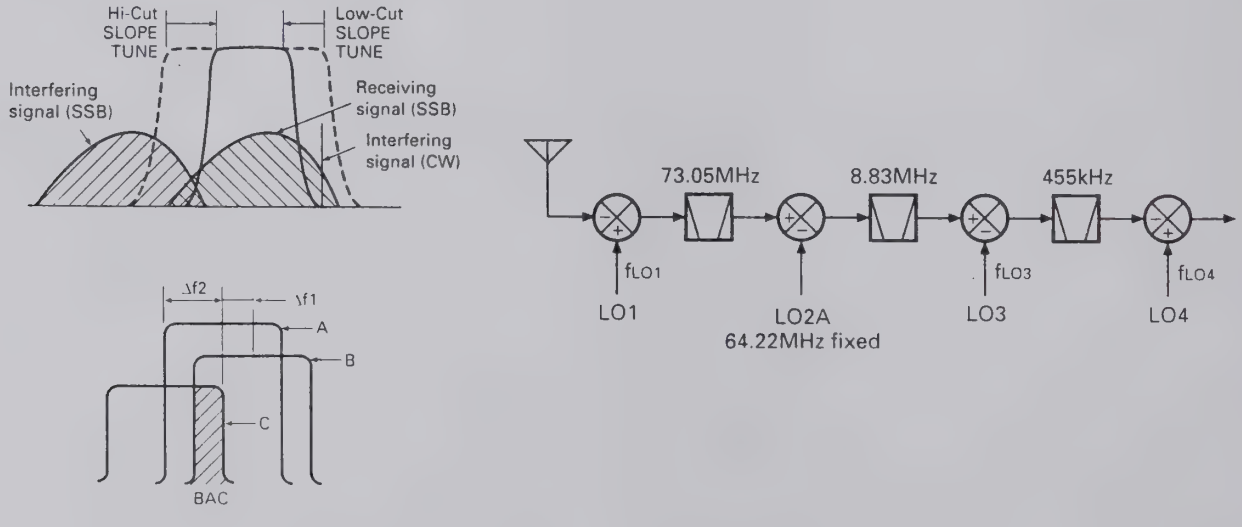

Fig. 4 SSB slope tune operating principle

CIRCUIT DESCRIPTION

	1.4k	1.6k	1.8k	2.0k	2.2k	2.4k	2.6k	2.8k	3.0k	3.4k	4.6k	6.0k
0 (Hz)	1.0k	0.8k	0.6k	0.4k	0.2k	0.0k	1.4k	1.2k	1.0k	0.6k	0.0k	0.0k
50	↑	↑	↑	↑	↑	↑	↑	↑	↑	↑	↑	↑
100	↑	↑	↑	↑	↑	↑	↑	↑	↑	↑	↑	↑
200	↑	↑	↑	↑	↑	↑	–0.2k	↑	↑	↑	↑	↑
300	↑	↑	↑	↑	↑	↑	↑	↑	↑	↑	↑	↑
400	↑	↑	↑	↑	↑	↑	↑	–0.4k	↑	↑	↑	↑
500	↑	↑	↑	↑	↑	↑	↑	↑	↑	↑	↑	↑
600	↑	↑	↑	↑	↑	↑	↑	↑	–0.6k	↑	↑	↑
800	↑	↑	↑	↑	↑	↑	↑	↑	↑	↑	–0.6k	↑
1000	↑	↑	↑	↑	↑	↑	↑	↑	↑	–1.0k	↑	↑

← High cut position

Filter selection
- 3kHz filter
- 6kHz filter
- 15kHz filter
- Default

↑
Low cut posotion
(455kHz filter) Low cut amount

(8.83MHz filter) High cut amount

Table 3 SSB slop tuning and analog filter high/low cut (Hz)

	400	450	500	550	600	650	700	750	800	850	900	950	1000
50 (Hz)	375	425	475	525	575	625	675	725	775	825	875	925	975
100	350	400	450	500	550	600	650	700	750	800	850	900	950
200	300	350	400	450	500	550	600	650	700	750	800	850	900
400	200	250	300	350	400	450	500	550	600	650	700	750	800
600	100	150	200	250	300	350	400	450	500	550	600	650	700
1000	–100	–50	0	50	100	150	200	250	300	350	400	450	500

← Filter center position

Default

↑
Filter width

Table 4-1 CW WIDTH/SHIFT low cut amount (Hz)

	400	450	500	550	600	650	700	750	800	850	900	950	1000
50 (Hz)	1975	1925	1875	1825	1775	1725	1675	1625	1575	1525	1475	1425	1375
100	1950	1900	1850	1800	1750	1700	1650	1600	1550	1500	1450	1400	1350
200	1900	1850	1800	1750	1700	1650	1600	1550	1500	1450	1400	1350	1300
400	1800	1750	1700	1650	1600	1550	1500	1450	1400	1350	1300	1250	1200
600	1700	1650	1600	1550	1500	1450	1400	1350	1300	1250	1200	1150	1100
1000	1500	1450	1400	1350	1300	1250	1200	1150	1100	1050	1000	950	900

← Filter center position

Default

↑
Filter width

Table 4-2 CW WIDTH/SHIFT high cut amount (Hz)

CIRCUIT DESCRIPTION

■ IF filter

The IF filter consists of a DSP digital filter. If there is a HIGH signal outside the DSP filter band, the analog to digital converter input level may be saturated, and the filter does not work properly. Thus, an analog filter is inserted between the second IF (8.83MHz) and the third IF (455kHz) so that it does not impair the DSP filter properties. To operate each filter properly, there are three kinds of filters for each IF signal and also slope tuning is carried out.

1) Filters characteristics

Item	Rating
Nominal center frequency	73.05MHz
Pass bandwidth	±7.5kHz or more at 3dB
Attenuation bandwidth	±30kHz or less at 40dB
Ripple	1.0dB or less
Insertion loss	3.0dB or less
Guaranteed attenuation	70dB or more at fo + (500 to 1000kHz) 70dB or more at fo – (200 to 1000kHz)
Center frequency deviation	Within ±1.5kHz at 3dB
Terminating impedance	2kΩ ± 10%

MCF (L71-0401-05) : RF unit XF1

Item	Rating
Nominal center frequency	8830kHz
Center frequency deviation	Within ±150Hz at 6dB
Pass bandwidth	±1.5kHz or more at 6dB
Attenuation bandwidth	±1.9kHz or less at 20dB ±2.75kHz or less at 60dB ±3.5kHz or less at 80dB
Ripple	2dB or less
Insertion loss	6dB or less
Guaranteed attenuation	80dB or more in the range ±3.5kHz to ±1MHz
Terminating impedance	600Ω / 15pF

MCF (L71-0235-05) : RF unit XF2

Item	Rating
Nominal center frequency	8830kHz
Pass bandwidth	±3.0kHz or more at 6dB
Attenuation bandwidth	±16.0kHz or less at 60dB ±13.0kHz or less at 50dB
Guaranteed attenuation	70dB or more with in fo ± 1MHz (Without spurious in the range fo to fo+500kHz)
Ripple	Within 1.0dB
Insertion loss	Within 1.5dB
Terminating impedance	1850kΩ / 2pF

MCF (L71-0266-05) : RF unit XF3

Item	Rating
Nominal center frequency	8.400MHz
3dB attenuation bandwidth	Within 180 ± 40kHz
20dB attenuation bandwidth	400kHz or less
Insertion loss	9.0dB or less Formula : 20 x log [E1+ (2 x E2)]
Ripple	1.0dB or less (within 3dB band)
Spurious attenuation	25dB or more (6.0 to 10.0MHz)
Voltage capacity	50V DC (1 minute)
Insulating resistance	100MΩ or more (100V DC)
Input and output impedance	330Ω

Ceramic filter (L72-0343-05) : RF unit CF500, 501

Item	Rating
Nominal center frequency	455kHz
6dB bandwidth	±3kHz (455kHz)
50dB bandwidth	±9kHz (455kHz)
Ripple	2dB or less (within 455+2kHz)
Insertion loss	6dB or less
Guaranteed attenuation	60dB or more (within 455±100kHz)
Input and output impedance	2.0kΩ

Ceramic filter (L72-0319-05) : Final unit CF451

Item	Rating
Center frequency	455±0.20kHz
6dB bandwidth	2.9 to 3.2kHz
60dB bandwidth	4.7kHz or less
Guaranteed attenuation	60dB or more at 0.1 to 1MHz
Spurious	40dB or more at 600 to 700kHz
6dB band ripple	2dB or less
Insertion loss	6dB or less
Input and output impedance	2kΩ

Ceramic filter (L72-0333-05) : Final unit CF452

Item	Rating
Nominal center frequency	455kHz
6dB bandwidth	±7.5kHz or more (455kHz)
50dB bandwidth	±15kHz or less (455kHz)
Ripple	3dB or less (within 455+5kHz)
Insertion loss	6dB or less
Guaranteed attenuation	35dB or more (within 455±100kHz)
Input and output impedance	1.5kΩ

Ceramic filter (L72-0366-05) : Final unit CF453

TS-870S

CIRCUIT DESCRIPTION

■ IF gain correction

The total gain changes when the AIP is turned ON or OFF or the band is 21.49MHz or higher. To limit the changes, the DSP corrects the IF gain. Table 2 lists the corrections. When the "AIP S-meter correction" on menu No.11 is turned ON, the S-meter is corrected when the AIP is turned ON. And since the IF gain is corrected greatly, the receiver internal noise output becomes large.

Frequency	Correction (dB)			Pre-amp gain (dB) reference
	AIP			
	OFF	ON1 (Menu 11 OFF)	ON2 (Menu 11 ON) SSB, CW, FSK only	
30kHz~ 21.49MHz	–2	0	+12	15
21.49MHz~ 30.MHz	–7	0	+12	21

Table 2 IF gain corrections

■ NB circuit

The noise blanker, like the conventional one, branches the signal before the narrow-band filter of the 8.83MHz second IF, and detects noise, and performs blanking using the second IF amplifier as a gate. The signal is amplified by Q28, detected by the AGC amplification and noise detection circuit consisting of Q29 to Q32 and D46, and then a blanking pulse is generated by the IC9 comparator. The noise detection circuit Q29 to Q32 and D46 is separated into segments by a jumper in the unit to prevent sneak path.

■ Slope tune

The operating principle of SSB-SLOPE-TUNE is explained first. When f_{LO1}, f_{LO3}, and f_{LO4} in Figure 4 are at their normal frequencies, the synthesized bandwidth is indicated by A. If the f_{LO1} frequency is increased by $\Delta f1$ and the f_{LO3} frequency is decreased by $\Delta f1$, the filter of the 8.83MHz band shifts to position B. The synthesized bandwidth is indicated by the section overlapped by A and B. When the frequencies of f_{LO1} and f_{LO3} are lowered by $\Delta f2$, only the 455kHz second IF filter shifts to position C. The synthesized bandwidth is indicated by the section overlapped by B and C.

Therefore, high frequencies are cut off by increasing the f_{LO1} frequency and decreasing the f_{LO3} frequency. Low frequencies are cut off by decreasing the f_{LO3} and f_{LO4} frequencies. The TS-870S enables these operations using the DSP filter.

In SSB mode, slope tune high cut/low cut is switched by using the filter select control : in CW mode, the WIDTH (bandwidth)/SHIFT (center frequency) is changed, and in FSK mode, the WIDTH (bandwidth) is changed. The microcomputer in the control unit sends filter select data to the DSP, and slope tuning is carried out by changing frequency data given to the PLL and DDS. The second IF (8.83MHz) and third IF (455kHz) filters are selected to carry out slope tuning effectively. Tables 3 and 4 list filter selections, slope tuning and analog filter high cut/low cut amounts. Slope tuning low cut/high cut can be switched in AM mode, and the WIDTH can be switched in FM mode by using DSP filters only, and the analog filter is fixed to 15kHz.

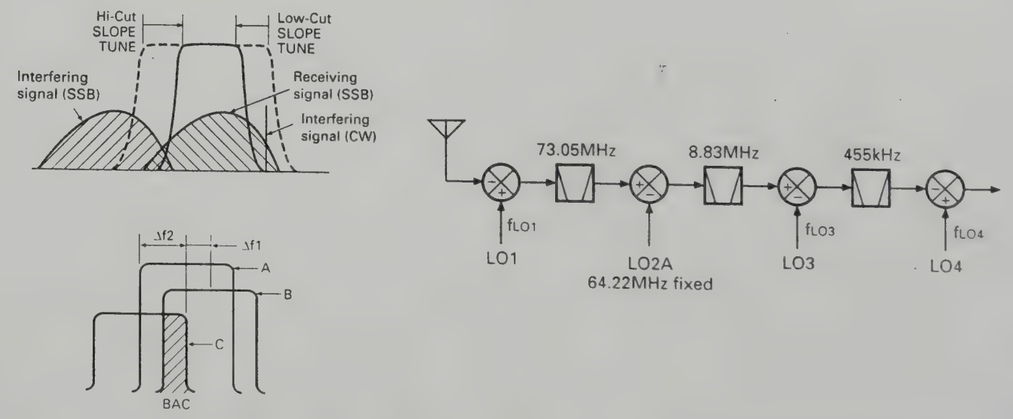

Fig. 4 SSB slope tune operating principle

CIRCUIT DESCRIPTION

	1.4k	1.6k	1.8k	2.0k	2.2k	2.4k	2.6k	2.8k	3.0k	3.4k	4.6k	6.0k
0 (Hz)	1.0k	0.8k	0.6k	0.4k	0.2k	0.0k	1.4k	1.2k	1.0k	0.6k	0.0k	0.0k
50	↑	↑	↑	↑	↑	↑	↑	↑	↑	↑	↑	↑
100	↑	↑	↑	↑	↑	↑	↑	↑	↑	↑	↑	↑
200	↑	↑	↑	↑	↑	↑	–0.2k	↑	↑	↑	↑	↑
300	↑	↑	↑	↑	↑	↑	↑	↑	↑	↑	↑	↑
400	↑	↑	↑	↑	↑	↑	↑	–0.4k	↑	↑	↑	↑
500	↑	↑	↑	↑	↑	↑	↑	↑	↑	↑	↑	↑
600	↑	↑	↑	↑	↑	↑	↑	↑	–0.6k	↑	↑	↑
800	↑	↑	↑	↑	↑	↑	↑	↑	↑	↑	–0.6k	↑
1000	↑	↑	↑	↑	↑	↑	↑	↑	↑	–1.0k	↑	↑

← High cut position

Filter selection
- 3kHz filter
- 6kHz filter
- 15kHz filter
- Default

↑
Low cut posotion
(455kHz filter) Low cut amount

(8.83MHz filter) High cut amount

Table 3 SSB slop tuning and analog filter high/low cut (Hz)

	400	450	500	550	600	650	700	750	800	850	900	950	1000
50 (Hz)	375	425	475	525	575	625	675	725	775	825	875	925	975
100	350	400	450	500	550	600	650	700	750	800	850	900	950
200	300	350	400	450	500	550	600	650	700	750	800	850	900
400	200	250	300	350	400	450	500	550	600	650	700	750	800
600	100	150	200	250	300	350	400	450	500	550	600	650	700
1000	–100	–50	0	50	100	150	200	250	300	350	400	450	500

← Filter center position

Default

↑
Filter width

Table 4-1 CW WIDTH/SHIFT low cut amount (Hz)

	400	450	500	550	600	650	700	750	800	850	900	950	1000
50 (Hz)	1975	1925	1875	1825	1775	1725	1675	1625	1575	1525	1475	1425	1375
100	1950	1900	1850	1800	1750	1700	1650	1600	1550	1500	1450	1400	1350
200	1900	1850	1800	1750	1700	1650	1600	1550	1500	1450	1400	1350	1300
400	1800	1750	1700	1650	1600	1550	1500	1450	1400	1350	1300	1250	1200
600	1700	1650	1600	1550	1500	1450	1400	1350	1300	1250	1200	1150	1100
1000	1500	1450	1400	1350	1300	1250	1200	1150	1100	1050	1000	950	900

← Filter center position

Default

↑
Filter width

Table 4-2 CW WIDTH/SHIFT high cut amount (Hz)

CIRCUIT DESCRIPTION

■ Local signals (LO1, LO3, LO4)

1) LO1

Table 5 lists LO1 frequency configuration.

DDS1 varies from 0.46 to 1.46MHz, and when the display frequency is multiple MHz (for example, 14.000MHz), 0.96MHz is output. When the display frequency is increased, the DDS1 frequency is reduced by the amount of change. When the DDS1 frequency is reduced to 0.46MHz, the frequency is switched to 1.46MHz, and when it is increased to 1MHz, the frequency returns to 0.96MHz (Figure 5). By changing the 1MHz band in synchronization with the display frequency, the 1MHz comparison PLL circuit is locked and LO1 is generated.

In Table 5, the 0.96MHz base indicates the DDS output when the frequency is multiple MHz. The frequency (UNV) indicates the decimal digits of the MHz frequency. (If the display frequency is 14.2MHz, (UNV) = 0.2MHz.) DDS is switched by 500kHz, so – 0.5MHz ≤ (UNV) < 0.5MHz.

As described in the slope tuning section, slope tuning high-cutting is corrected for LO1, so the correction is added to the DDS output. SSB H in Table 5 indicates the correction. Table 3 shows the actual correction of SSB H. (For example, when the high frequency is 2.2kHz, the correction SSB H is 0.2kHz.)

Since RIT and XIT change the receive and transmit frequencies by the preset amount, it needs to be corrected. They are D RIT and D XIT in Table 5.

The "8.83MHz window-joining" (D 883) in Table 5 is determined during adjustment. For example, the equation for calculating the DDS output frequency for 14.2MHz USB. The high-cut frequency is assumed to be 2.6kHz. (D 833 is zero.)

DDS1 : 0.96M – (UNV) – (OFS SSB) + (SSB H)
= 0.96M – 0.2M – 1.2k – 0.2k
= 758.6kHz
0.96M : Base
UNV : 14.2M – 14.0M = 0.2M
OFS SSB (Filter offset) : 1.2k
SSB H (Slope HI) : –0.2k (See table 3.)

The LO1 output frequency f_{LO1} is calculated from the frequency configuration in Figure 6.

$f_{LO1} = f_{PLL\ IN} + 60MHz - (4MHz + f_{DDS1})$
$= 32MHz + 60MHz - (4MHz + 758.6kHz)$
$= 87.2414MHz$

Where $f_{PLL\ IN}$ is the PLL input frequency and f_{DDS1} is the DDS1 output frequency.

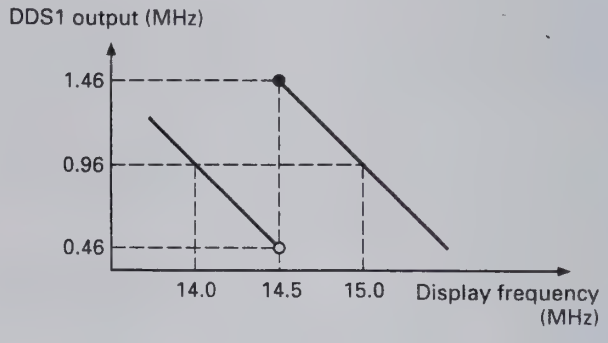

Fig. 5 Relationship between display frequency and DDS output frequency

2) LO3

Table 6 lists the LO3 frequency configuration.

The LO3 frequency is 8.375MHz, and is generated by the chopper circuit. The DDS2 output frequency is 1.625MHz. For LO3, slope tuning low-cut/high-cut is corrected. SSB H and SSB L in Table 6 indicate the corrections. D 833 and D 455 are values determined during filter window-joining and adjustment.

For example, if USB is 14.2MHz, high-cut frequency is 2.6kHz, and low-cut frequency is 300Hz, the LO3 frequency is calculated as follows. It is assumed that D 833 and D 455 are zero.

$f_{LO3} = 1.625MHz + (SSB\ H) + (SSB\ L)$
$= 1.625MHz + (-0.2kHz) + 300Hz$
$= 1625.1kHz$

CIRCUIT DESCRIPTION

3) LO4

Table 7 lists the LO4 frequency configuration.

For LO4, correction (OFS SSB) is carried out so that a signal passes through a filter according to the mode, and the slope tune low-cut (SSB L) is corrected. The mode offset is the frequency (11.30859375kHz) used for processing by the DSP, and its sign changes with the mode.

For example, if USB is 14.2MHz and the low-cut frequency is 300Hz, the LO4 output frequency is calculated as follows.

fLO4 = 455kHz + (mode offset) + (OFS SSB) + (SSB L)
= 455kHz + 11.30859375kHz + 300Hz
= 467.8085938kHz

The filter is corrected according to each mode by LO1 and LO4, slope tuning high-cut is corrected by LO1 and LO3, and low-cut is corrected by LO3 and LO4.

In other modes, each local frequency is determined by the calculation method as shown previously in Tables 5 to 7.

Component	DDS1 (1HZ)															
	LSB		USB		CW		CW-R		FSK		FSK-R		AM		FM	
	RX	TX	RX	TX	RX	TX	RX	TX	RX	TX	RX	TX	RX	TX	RX	TX
BASE	0.96MHz*6															
Frequency (100kHz or less)	– (UNV)															
Mode offset																
Filter offset*1	+ (OFS SSB)	+2k	– (OFS SSB)	–2k	–800		+800									
CW pitch					+ (PITCH)		– (PITCH)									
FSK tone (H/L)																
FSK shift (polarity)																
RIT	– (D RIT)		– (D RIT)		– (D RIT)		– (D RIT)		– (D RIT)		– (D RIT)		– (D RIT)		– (D RIT)	
XIT		– (D RIT)		– (D RIT)		– (D RIT)		– (D RIT)		– (D RIT)		– (D RIT)		– (D RIT)		– (D RIT)
Slope high*2, 3	– (SSB H)		+ (SSB H)		+ (CW H)		– (CW H)		– (FSK H)		+ (FSK H)					
Slope low																
8.83MHz window-joining*4, 5	– (D 883)			+ (D 883)												
455kHz window-joining																

*1 : Although receiver data has an independent value for each mode, the data area for calculation is D OFFSET.
Transmitter data is fixed because the 8.83MHz filter bandwidth is fixed.

*2 : Although it has an independent value for each mode, the data area for calculation is D SLOP L.

*3 : The slope low-cut is carried out at 455kHz and high-cut is carried out at 8.83MHz.

*4 : The LSB and USB may have the same value because the filter bandwidth is wide.

*5 : The positive direction for adjustment is the direction in which the receive carrier frequency increases.

*6 : The DDS1 variable frequency is 1.45MHz and is shifted by 500kHz.

Table 5 LO1 frequency configuration

CIRCUIT DESCRIPTION

Component	DDS2 (LO3)															
	LSB		USB		CW		CW-R		FSK		FSK-R		AM		FM	
	RX	TX	RX	TX	RX	TX	RX	TX	RX	TX	RX	TX	RX	TX	RX	TX
BASE	1.625MHz*6															
Mode offset																
Filter offset																
CW pitch																
FSK tone (H/L)																
FSK shift (polarity)																
RIT/XIT																
Slope high*1, 3	– (SSB H)		+ (SSB H)		+ (CW H)		– (CW H)		– (FSK H)		+ (FSK H)					
Slope low*2, 3	– (SSB L)		+ (SSB L)		+ (CW L)		– (CW L)		– (FSK L)		+ (FSK L)					
8.83MHz window-joining*4, 5	– (D 883)			+ (D 883)												
455kHz window-joining*4, 5	+ (D 455)			– (D 455)												

*1 : Although it has an independent value for each mode.

*2 : Although it has an independent value for each mode.

*3 : The slope low-cut is carried out at 455kHz and high-cut is carried out at 8.83MHz.

*4 : The LSB and USB may have the same value because the filter bandwidth is wide.

*5 : The positive direction for adjustment is the direction in which the receive carrier frequency increases.

*6 : Since the DDS2 output frequency is high, 1.625MHz (10MHz – output frequency (8.375MHz)) is output to the DDS.

Table 6 LO3 frequency configuration

Component	DDS3 (LO4)															
	LSB		USB		CW		CW-R		FSK		FSK-R		AM		FM	
	RX	TX	RX	TX	RX	TX	RX	TX	RX	TX	RX	TX	RX	TX	RX	TX
BASE	455kHz															
Mode offset (kHz)	–11.30859375		+11.30859375		+11.30859375		–11.30859375		–11.30859375		+11.30859375		+11.30859375		+11.30859375	
Filter offset*1	– (OFS SSB)	–2k	+ (OFS SSB)	+2k	+800		–800									
CW pitch																
FSK tone (H/L)									–2125 /–1275		+2125 /+1275					
FSK shift (polarity)											+ (FSK S)	+ (FSK S)				
RIT/XIT																
Slope high																
Slope low*2, 3	– (SSB L)		+ (SSB L)		+ (CW L)		– (CW L)		– (FSK L)		+ (FSK L)					
8.83MHz window-joining																
455kHz window-joining*4, 5	– (D 455)			+ (D 455)												

*1 : Although receiver data has an independent value for each mode.
Transmitter data is fixed because the 8.83MHz filter bandwidth is fixed.

*2 : Although it has an independent value for each mode.

*3 : The slope low-cut is carried out at 455kHz and high-cut is carried out at 8.83MHz.

*4 : The LSB and USB may have the same value because the filter bandwidth is wide.

*5 : The positive direction for adjustment is the direction in which the receive carrier frequency increases.

Table 7 LO4 frequency configuration

CIRCUIT DESCRIPTION

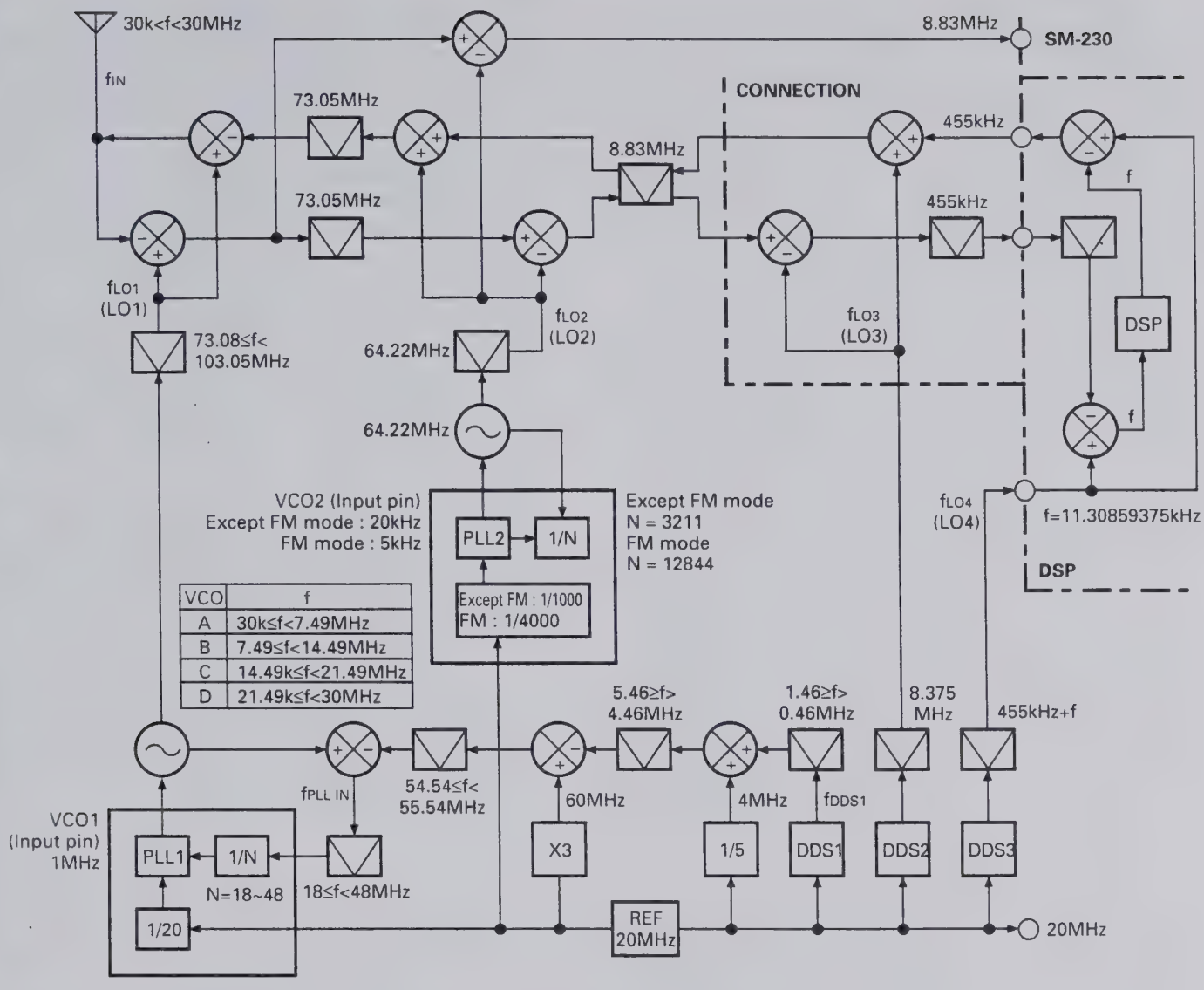

Fig. 6 Frequency configuration

CIRCUIT DESCRIPTION

Transmitter Circuit

The transmitter system block diagram is shown in Figure 7.

The TS-870S has the same frequency configuration as the TS-850 after the DSP generates the IF signal and converts it to 455kHz as a basic configuration.

A difference from the conventional model other than DSP modulation is that the TS-870S uses a digital-to-analog converter and a microcomputer for various controls. This allows for fine control and reduces the number of controls needed for adjustment.

The TIF (second IF) signal output from the TX-RX unit goes to the final unit (C/5 connection section). The signal is converted from 455kHz to 8.83MHz. The 8.83MHz third IF signal converted by the Q470 and Q471: 3SK131(M) mixer is switched to the transmitter by the D450 diode switch, and output from CN412 to the RF unit (A/9 RF section) as TR88 signal.

The signal input to CN10 of the RF unit is passed through the 8.83MHz IF filter used for both transmission and reception. During transmission, XF3 BW: 5kHz is selected by D69 and D67 and the filter attenuates the components outside the band. The transmit signal switched by D68 is amplified and ALC-controlled by the Q39 ALC amplifier, and the resulting signal goes to the D49 TX gain control circuit. This circuit controls the gain at the transmission stage according to the given voltage via a variable attenuator of a pin diode. The control voltage is controlled by a microprocessor, and is used to set the gain for each band or set the gain with the PWR knob and mode.

The third IF signal is then converted to the 73.05MHz fourth IF signal by the Q37 and Q38 : 3SK131(M) mixer. The signal is passed through the LC filter, and is converted to the target frequency by the final local oscillator LO1 at the Q35 and Q36 : 3SK184(R) mixer. The signal is passed through the radiation filter and the band-pass filter used by both the transmitter and receiver sections to attenuate the spurious outside the band. The band-pass filter output is amplified by Q5 : 2SC2954, and output to the final unit (A/5 final section) from CN4 as the drive signal.

■ TX-AGC

The DSP controls the input level until it starts modulation. It is like AGC applied to the microphone amplifier, and when the input level exceeds the certain level, the amplifier gain decreases to keep the modulator input level constant, i.e., to keep the IF output constant.

The MIC gain control in SSB and AM modes is used to adjust the maximum gain of the AGC amplifier in the 40dB range. Even if the control is set maximum, the input level to the modulator is kept constant. If the PROC is OFF in SSB mode, the CAR level (TIF output level) is fixed, and the ALC effect is limited. If the PROC is ON in SSB mode, the ALC effect is adjusted by the CAR control. The microphone amplifier gain is fixed, but the speech processor input level is controlled by the AGC and then becomes the level set by the PROC control.

In FM mode, the microphone amplifier sensitivity can be changed to high or low by using Menu No.61. Since the frequency deviation is limited by the TX-AGC, it is not distorted extremely like in the clipper method. In AM mode, the sensitivity is controlled so that modulation does not exceed 70%.

The TX-AGC is required to stabilize the DSP modulator operation. The modulator may operate without using the AGC by reduction of the gain and input level, but it cannot be completely turned OFF. Care must therefore be taken when measuring the ALC properties and frequency characteristics.

CIRCUIT DESCRIPTION

AT Unit (Auto Antenna Tuner)

When the AUTO/THROUGH switch is set to AUTO, ATA goes LOW, the AUTO/THROUGH switching relay K1 is executed, and AT is inserted to prepare for tuning. If "RX AT ON" is set in menu No.8, AT is inserted during reception. If the position of variable capacitor VC1 or VC2 is not the preset position of the band, presetting is performed. The AT tune and transmission do not occur until presetting ends.

When AT TUNE is turned on with this condition, ATS goes HIGH, the CW mode is set, and the transmission output becomes about 10W. If the SWR is lower than 1.2, the tuning is completed and auto antenna tuning ends. If the SWR is greater than 1.2, the motor control pulse duty (described later) is controlled according to the SWR.

The SWR can be set to 1.6 after AT tuning by turning menu No. 33 "TUNE WIDE" ON.

The motor speed is determined by a microcomputer. Its direction is controlled by phase comparator IC1 and amplitude comparator IC6 if the APRE is LOW, and controlled by the microcomputer if the APRE is HIGH.

■ Auto tuning mode

The transmission power from the final section via the filter section is passed through the current/voltage detection transformer L1 and L2, which use a troidal core. The current and voltage components detected here are rectified by the waveform rectification circuit consisting of D4, D7, Q1, and Q2, and then the phase is compared by IC1. The output signals ($\overline{Q}$ and Q) from pins 8 and 9 of IC1 are passed through the switch by IC2 and are applied to motor drive IC IC4. Variable capacitor VC1 is rotated by the motor M1 so that the phase difference of the voltage and current components decreases.

The voltage and current components detected by L1 and L2 are rectified by diodes D1 and D2 and are applied to the comparator of voltage comparison circuit IC6 as the amplitude component. The comparator output is passed through switch IC3. Motor M2 is driven by another motor drive IC IC5 and variable capacitor VC2 is rotated in the direction that decreases the amplitude difference of the voltage and current components.

Variable capacitor VC1 for capacity adjustment is therefore controlled so that the current and voltage phases match. Variable capacitor VC2 for resistance adjustment is controlled so that the current and voltage amplitude difference decreases. SWR becomes 1 when the phases match and the amplitude difference is zero.

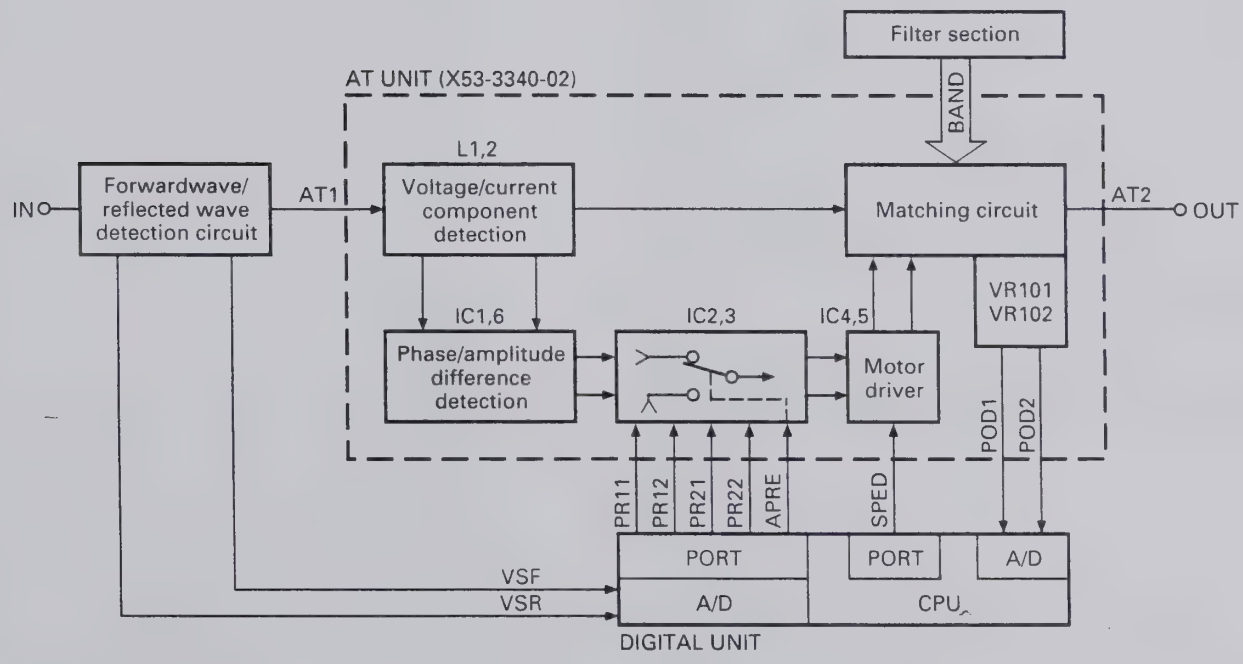

Fig. 9 AT unit block diagram

CIRCUIT DESCRIPTION

The speeds of motors M1 and M2 are determined by the duty cycle of the pulse input to control input pin 8 of IC4 and IC5, and controlled by the standing wave ratio (SWR) calculated by the control unit CPU.

Pulse signal SPED output from the control unit is passed through Q5 : DTC114EK, amplified by Q4, and input to IC4 and IC5 as a control pulse.

If the SWR is 2 or more, the duty cycle of the motor drive voltage pulse is 100%. If the SWR is 1.5 to 2, the duty cycle becomes approx. 80%. If the SWR is less than 1.5, the duty ratio becomes approx. 50% and the motor runs at low speed.

The matching circuit is T type, and the tap position from 1.8 to 30MHz is switched by seven relays K101 to K103 and K105 to K108.

Position detection volumes VR101 and VR102 are linked to the rotation axes of variable capacitors VC1 and VC2 with a gear ratio of 1 : 1. The voltages of 0 to 5V (POD1 and POD2) are generated according to the capacities of the variable capacitors. This position voltage data is sent to the microprocessor in the control unit through the analog to digital converter, and is used as the reference voltage in the feedback control system, such as for preset tuning. The same signal is also used for presetting data and end-detection.

The volume used by the TS-870S is a normal one, not an endless one. Since the rotation angle of this volume is limited, the rotation range is from the minimum capacity to the maximum capacity plus allowance.

By this control, like the preset tuning, which will be described later, POD1 and POD2 are monitored by the microprocessor. If the lower limit voltage of 0.6V or the upper limit voltage of 4.2V is reached, the microprocessor detects that the voltage is close to a limit. To return the voltage to the opposite side, APRE is made HIGH. If the variable capacitor is VC1, and the voltage is close to the lower limit in respect to POD1, the voltage near the upper limit is output. If the voltage is close to the upper limit in respect to POD1, the voltage near the lower limit is output.

The other variable capacitor VC2 outputs the voltage read by POD2 as it is. If the variable capacitor voltage exceeds the specified limit, it returns to the other limit. The other variable capacitor remains in the same position.

If the APRE is HIGH, the motor rotation direction is determined by the CPU unless auto tuning is performed.

The logic for PR11 to PR22 is the same as for IC4 and IC5 : BA6109U2. The signal output from the digital unit passes through IC2 and IC3 : TC4066BP and enters IC4 and IC5.

		PR11	PR12	PR21	PR22
Motor 1	Normal rotation	H	L	–	–
	Reverse rotation	L	H	–	–
Motor 2	Normal rotation	–	–	H	L
	Reverse rotation	–	–	L	H

■ Preset tuning

When tuning ends, the position of the variable capacitor is stored in memory by the microprocessor as preset data for that band.

When the band is changed after tuning is performed in another band, APRE goes HIGH, the motor is controlled by the microprocessor, and preset tuning is performed. During preset tuning, auto tuning or signal transmission is inhibited even if the AT TUNE switch is pressed or transmission becomes ready.

The initial preset-data when the microprocessor is reset includes standard data for a 50-ohm load on each band.

■ Preset memory band

30kHz ≤ f
1.850MHz ≤ f
2.010MHz ≤ f
3.525MHz ≤ f
3.575MHz ≤ f
3.725MHz ≤ f
4.490MHz ≤ f
7.030MHz ≤ f
7.100MHz ≤ f
7.490MHz ≤ f
10.490MHz ≤ f
14.100MHz ≤ f
14.490MHz ≤ f
20.990MHz ≤ f
21.150MHz ≤ f
21.990MHz ≤ f
25.490MHz ≤ f
29.000MHz ≤ f

CIRCUIT DESCRIPTION

Standby Control and Timing

Standby control and timing are carried out by using software for the main CPU in the control unit (X53-356X-XX). The control signals for the control unit are listed below. (See Figure 10 for each timing chart.)

SS : Standby switch input signal. Active LOW.
KEY : Keying input signal from the keyer. Active LOW.
TXC : Transmission output signal. Active HIGH. Same timing as TXB.
RXC : Reception output signal. Active HIGH. Same timing as RXB.
CKY : Output signal. Active HIGH.

With the SS line

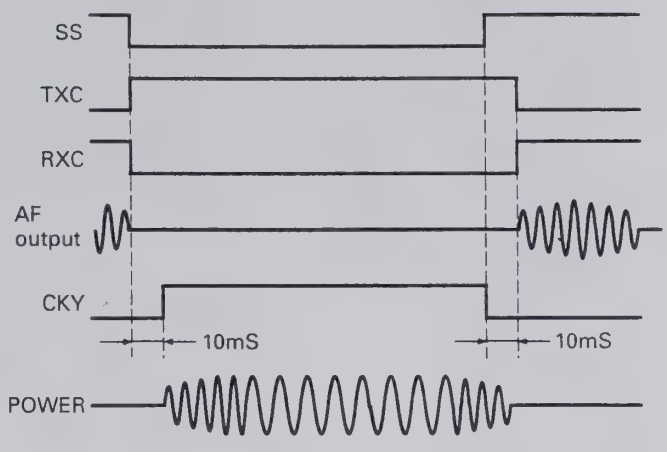

By full break-in

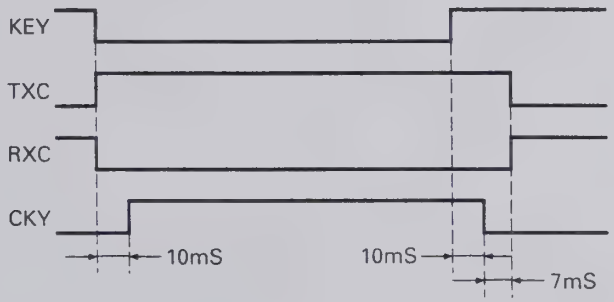

by semi break-in

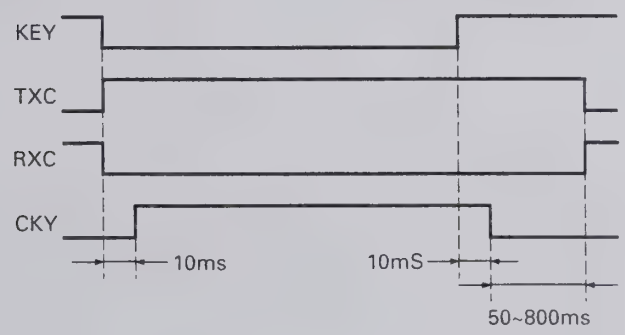

Fig. 10 Transmit/receive signal timing chart

CIRCUIT DESCRIPTION

Digital Control Unit

The TS-870S digital control circuit has a multiple chip configuration centered around the main CPU (IC6 : M37702S4BFP), and consists of a 64K ROM (IC12 : 27C512RJLVC), an 8K RAM (IC8 : LC3564QME-10), and an extended I/O (IC16, IC22, IC23 : CXD1095Q). This circuit controls about 60 different input and about 80 different output signals.

Figure 11 is a digital control block diagram.

■ Address control

The main CPU operates in the microprocessor mode in which the external ROM is used. The memory is configured as shown in the memory map, and the main CPU A12 to A15 and D0 signals and IC14, IC17, IC18, and IC19 are used to generate a chip select (CS) signal to select and access an IC. (Figure 12)

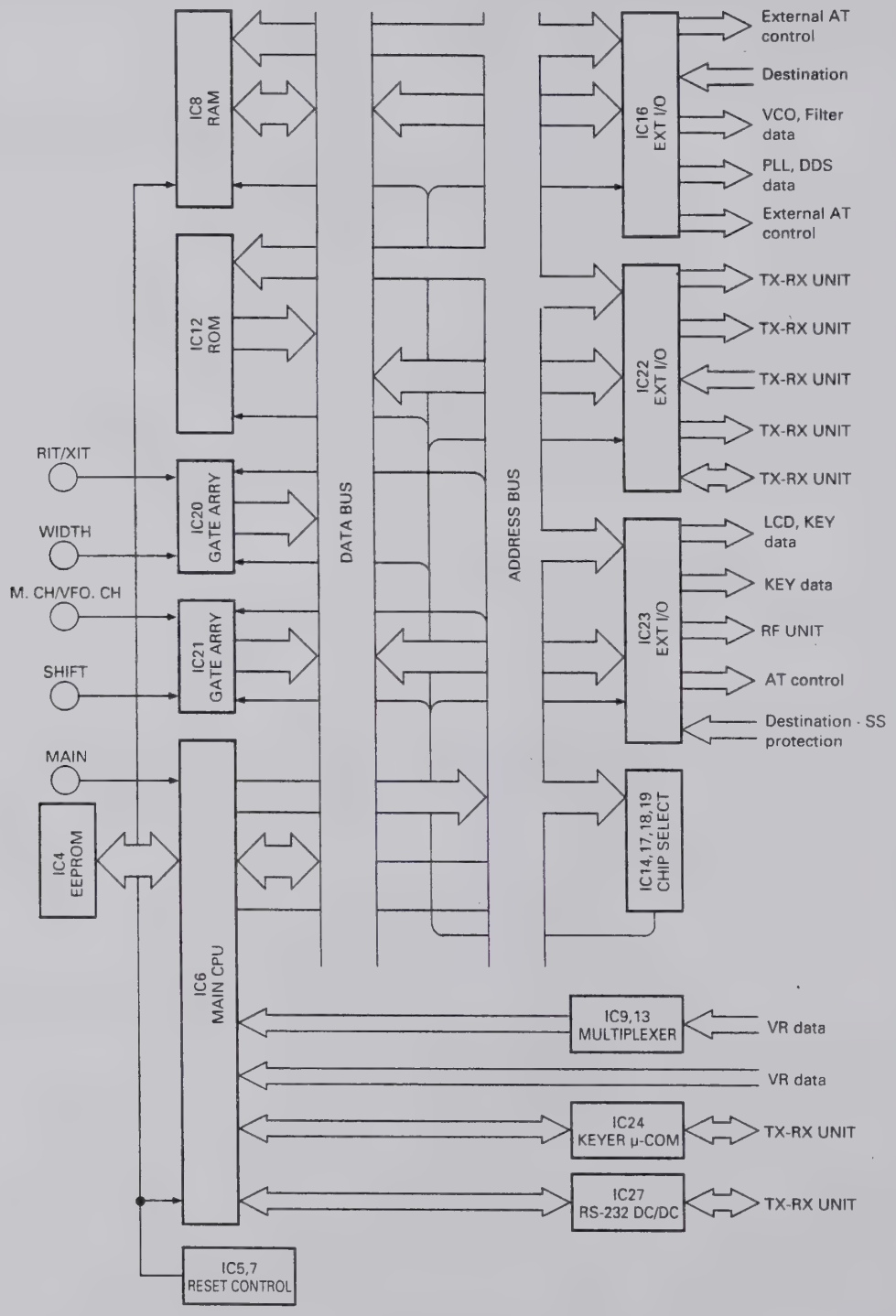

Fig. 11 Digital control block diagram

CIRCUIT DESCRIPTION

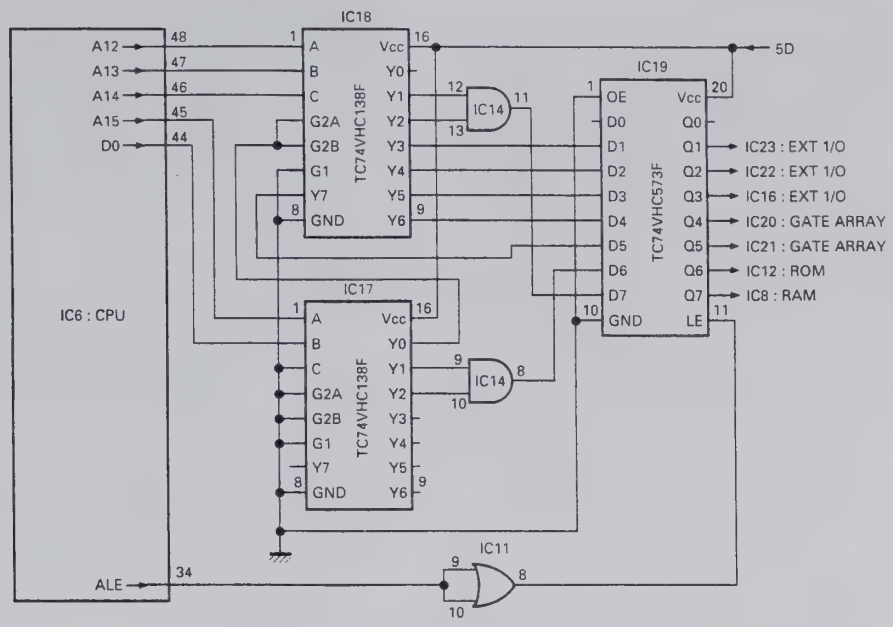

Fig. 12 Address control circuit

■ Encoder circuit

The main encoders are magnetic rotary encoders, and the click, RIT, SHIFT, and WIDTH encoders are contact-type rotary encoders.

The main encoder pulses are read directly by the main CPU.

The other encoder pulses enter the gate array (IC20 and IC21 : LZ92K371), and are read through the main CPU data bus. The gate array is selected by the latch (IC19 : TC74VHC573F) Q4 and Q5. The CK1, CK2 or CK3, CK4 encoder is selected by A0 of the gate array. Encoder data is output to D0 to D7 by making the read signal (RD) LOW when the chip select (CS) signal is LOW. IC25 and IC26 absorb encoder pulse chattering. (Figure 13)

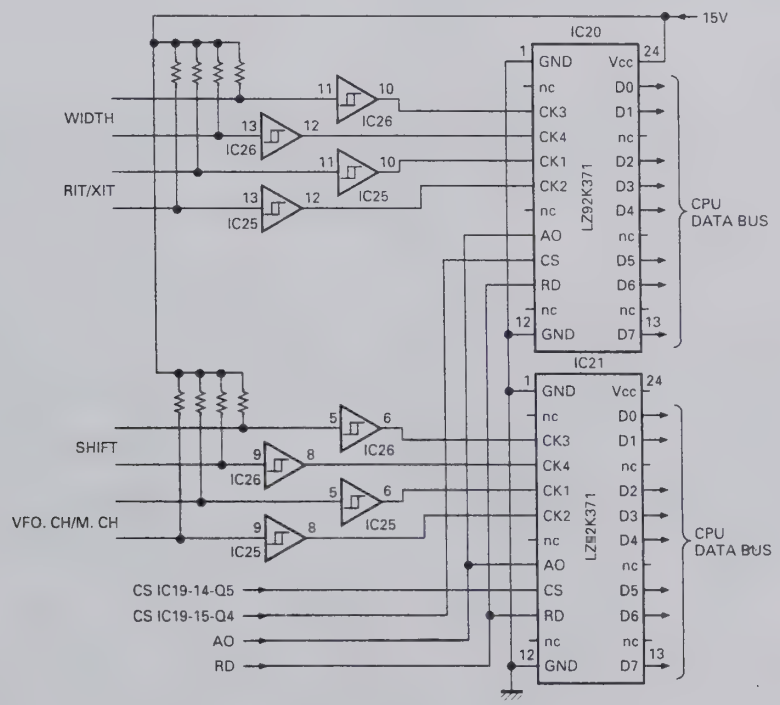

Fig. 13 Encoder circuit

CIRCUIT DESCRIPTION

■ System reset and RAM backup

The power monitor circuit (Q1, Q2, D4, D5, R6) monitors the power supply voltage. If the voltage is LOW, the circuit outputs a LOW signal to the INT1 port of the main CPU and the IRQ2 port of the microprocessor in order for the electronic keyer to stop operation. At the same time, the battery backup IC (IC5 : MB3780A) backs up the RAM with a lithium battery.

If the power supply voltage becomes normal, a HIGH signal is input to the INT1 port and the IRQ2 port, and the main CPU is initialized by the battery backup IC after the time constant set by C56 and C57. The operation resumes and power is supplied to the RAM from the outlet. (Figure 14)

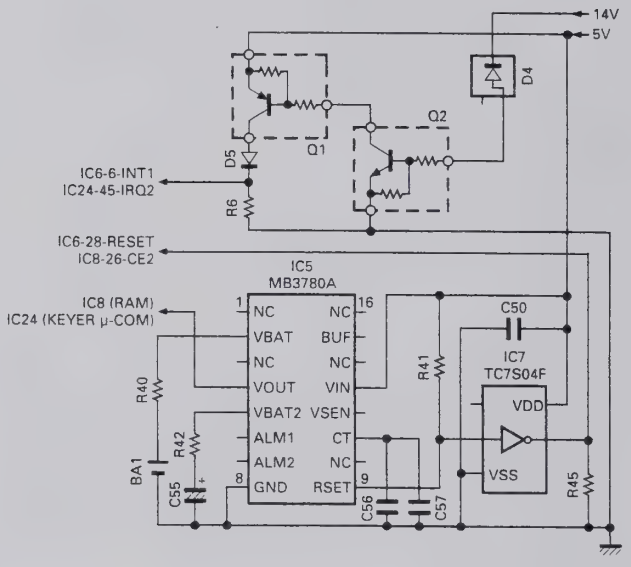

Fig. 14 System reset and RAM backup

■ Analog Signal Input

The main CPU incorporates an 8-channel analog-to-digital (A/D) converter, and in addition, has a multiplexer (IC9 and IC13 : TC4052BF) for entering 16-channel analog signals. Incoming analog signals are converted by the main CPU to digital values, which are used as digital data.

■ Display

Since the TS-870S uses a negative LCD and a fluorescent display tube.

The LCD is lighted with half a duty by the LCD driver, and the fluorescent display tube is lighted by an inverter.

The LCD driver data is set by the clock signal (UCK1), data signal (UDA1), and enable signals (ENL2, ENL3). The blanking signal (BLANK) turns the LCD driver OFF, and the dimmer signal (DIM) changes the inverter duty for dimmer.

■ Key scan

The PB0 and PB7 of IC23 and O2 to O8 of IC501 form a keyboard matrix. A key scan signal (a negative pulse) is output from the O2 to O8. One column corresponding to the PB0 and PB7 is selected, and the state of that switch is read. When the switch at the intersection of the matrix is pressed, the PBx port bit goes LOW. Thus, which switch is pressed can be detected. The key chattering is eliminated by software. (Figure 15)

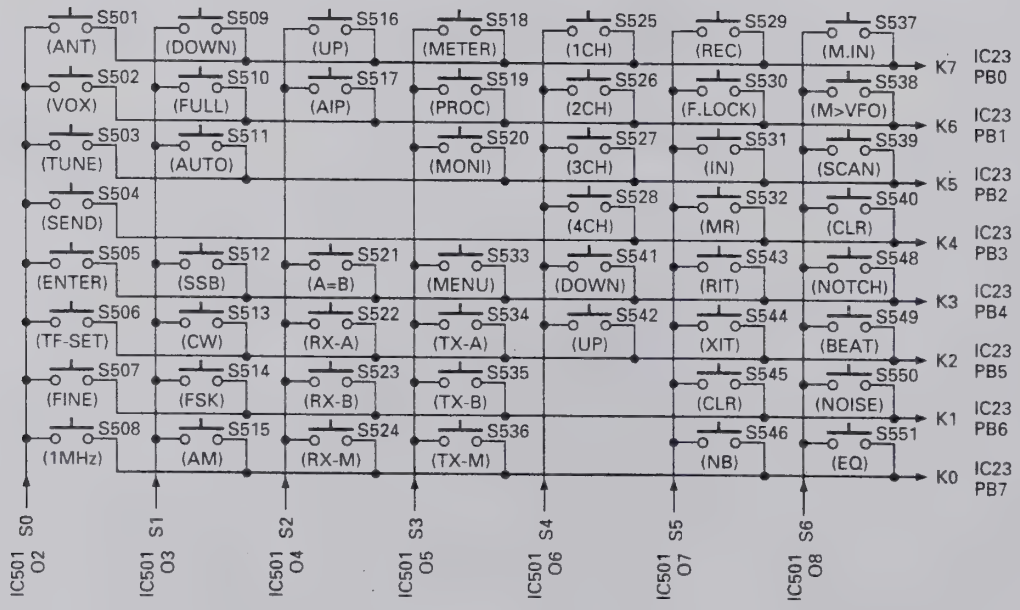

Fig. 15 Key scan circuit

CIRCUIT DESCRIPTION

■ PLL and DDS data

The TS-870S has three PLLs and three DDSs in the PLL section in the RF unit. The main CPU sends data to the PLL ICs and DDS ICs according to the displayed frequency. The PLL ICs provide unlock (UNL) signals. If one of the PLLs should unlock, the display indicates that the PLL is unlocked (Err-FE).

The TX-RX unit also has a PLL IC, to which the main CPU sends 46.32MHz data. The PLL IC also outputs an unlock signal (PLUL), and if a PLL is unlocked, an unlock message (Err-FD) is displayed.

■ AT control

The AT control inputs the variable capacitor position data (POD1, POD2, analog data input), forward wave voltage and reflected wave voltage (VSF, VSR, analog data input) for SWR calculation in the main CPU, and outputs the motor normal/reverse rotation control (PR11, PR12, PR21, PR22), motor speed control signal (SPED), and motor control switching signal (APRE).

SPED switches the motor rotation ON and OFF during AT tune and presetting by PWM with the duty cycle related to the SWR value.

APRE changes the motor normal/reverse rotation control to analog control for AT tune, and to digital control for presetting.

PR11 to PR22 control the motor normal/reverse rotations and stop when the motor normal/reverse control signal is controlled digitally. (Figure 16)

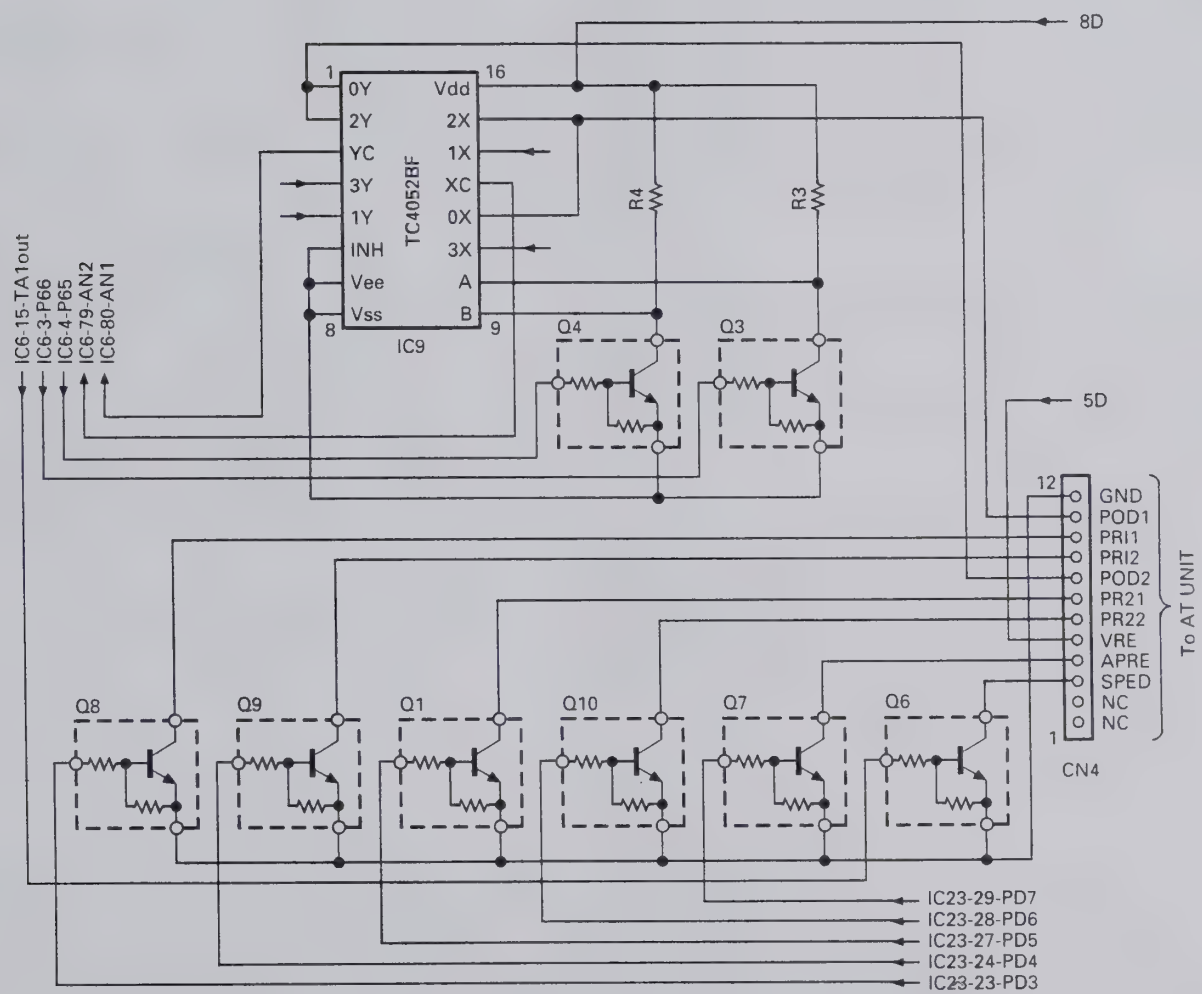

Fig. 16 AT control

CIRCUIT DESCRIPTION

■ IF filter switching

The IF filter switching signal from the control unit is controlled by PC0 to PC2 (pins 11 to 13) of IC23 and sent to the RF unit and final unit connection section.

The RF unit selects the 8.83MHz IF filter, and the final unit connection section selects the 455kHz IF filter.

The IF filter select signal is automatically interlocked with the WIDTH control.

SSB		CW		FSK		AM		FM	
WIDTH	IF FILTER	WIDTH	IF FILTER	WIDTH	IF FILTER	WIDTH	IF FILTER	WIDTH	IF FILTER
1.4k	3k	50	3k	250	3k	5.0k	6k	5.0k	15k
1.6k	↑	200	↑	500	↑	6.0k	15k	6.0k	↑
1.8k	↑	300	↑	1.0k	↑	8.0k	↑	8.0k	↑
2.0k	↑	400	↑	1.5k	↑	10.0k	↑	10.0k	↑
2.2k	↑	600	↑			12.0k	↑	12.0k	↑
2.4k	↑	1.0k	↑			14.0k	↑	14.0k	↑
2.6k	6k								
2.8k	↑								
3.0k	↑								
3.2k	↑								
3.4k	↑								
4.6k	↑								
6.0k	15k								

Table 9 IF filter selection

■ Receive band-pass filter selection

The RF BPF signal from the control unit is sent from PC6 (pin 17) of IC23 to the RF unit as serial data. The serial-to-parallel converter (TC9174F) in the RF unit converts serial data to parallel data and switches between band-pass filters.

■ Transmit low-pass filter selection

The LPF signal from the control unit is sent as serial data from PC1 (pin 12) of IC16 to the final unit filter section via the final unit connection section. The serial-to-parallel converter (TC9174F) in the final unit filter section converts serial data to parallel data and switches between low-pass filters.

■ PLL VCO data

The RF unit PLL section switches between VCOs according to the VCO band data (VB0 to VB3) output from PC4 to PC7 (pins 15 to 18) of IC16 in the control unit.

■ Electronic keyer

The TS-870S uses a dedicated IC (IC24 : 68HC05G2419553) to control the electronic keyer. The main CPU CH1 to CH4 signals switch operations to the electronic keyer IC (keyer microprocessor).

The keyer microprocessor controls the electronic keyer according to KEY SPEED VR data, DOT/DASH signal, and CH1 to CH4 signals switch operation signals from the main CPU.

The keyer microprocessor is normally at the standby mode (power save mode). Each control signal is connected to PB7 (pin 77). When this port is LOW, the standby mode is terminated.

When the standby mode is cancelled, PA7 (pin 30) outputs a HIGH signal. It is used to determine which control signal is active : CH1 to CH4, KEY SPEED VR data, or DOT/DASH signal.

PA2 (pin 25) is an input/output port that inputs KEY SPEED VR data and outputs control signal (HIGH) for VR data determination.

When a HIGH signal is output from PA2 (pin 25), C114 is charged. KEY SPEED VR data is calculated until C114 is discharged and the port goes LOW.

IRQ2 (pin 41) is an interrupt port that detects power supply voltage drop. When this port detects it, the standby mode is entered.

The keyer microprocessor outputs the key down and beep signals. The key down signal is input to IC22 (PC4 : pin 15), and the main CPU controls transmission and reception. The beep signal is input to IC29 (TC7S32F : OR gate) and output to the TX-RX unit as CKY.

The TX-RX unit determines the key jack ON/OFF and CKY level and outputs sidetone.

CIRCUIT DESCRIPTION

■ Band data

Frequency (MHz)		RF BPF (RB)		LPF	VCO				PLL
Lower limit	Upper limit	RX	TX		A	B	C	D	N
0.01	0.49	1	1	1	1	0	0	0	38
0.49	0.99	2	2						38
0.99	1.705								37
1.705	2.01	3	3						37
2.01	2.49			2					36
2.49	2.99	4	4						36
2.99	3.49								35
3.49	3.99								35
3.99	4.49	5	5						34
4.49	4.99			3					34
4.99	5.49								33
5.49	5.99								33
5.99	6.49								32
6.49	6.99								32
6.99	7.3	6	6						31
7.3	7.49	7	7						31
7.49	7.99			4	0	1	0	0	31
7.99	8.49								30
8.49	8.99								30
8.99	9.49								29
9.49	9.99								29
9.99	10.49								28
10.49	10.99	8	8	5					28
10.99	11.49								27
11.49	11.99								27
11.99	12.49								26
12.49	12.99								26
12.99	13.49								25
13.49	13.99								25
13.99	14.35	9	9						24
14.35	14.49	10	10						24
14.49	14.99			6	0	0	1	0	24
14.49	15.49								23

Frequency (MHz)		RF BPF (RB)		LPF	VCO				PLL
Lower limit	Upper limit	RX	TX		A	B	C	D	N
15.49	15.99	10	10	6	0	0	1	0	23
15.99	16.49								22
16.49	16.99								22
16.99	17.49								21
17.49	17.99								21
17.99	18.49								20
18.49	18.99								20
18.99	19.49								19
19.49	19.99								19
19.99	20.49								18
20.49	20.99								18
20.99	21.49	11	11						17
21.49	21.99	12	12		0	0	0	1	17
21.99	22.49			7					16
22.49	22.99								16
22.99	23.49								15
23.49	23.99								15
23.99	24.49								14
24.49	24.99								14
24.99	25.49								13
25.49	25.99			8					13
25.99	26.49								12
26.49	26.99								12
26.99	27.49								11
27.49	27.99								11
27.99	28.49								10
28.49	28.99								10
28.99	29.49								9
29.29	29.99								9
29.99	30								9

CIRCUIT DESCRIPTION

■ Function of IC pins

1) CPU : M37702S4BFP (Control unit IC6)

Pin No.	Port name	Pin name	I/O	Function	Active level	Initial state
1	AN0	ADR0	I	VPRC, VMON, VAGC signal		
2	P67	RES	O	Reset signal output	L	H
3, 4	P66, P65	CTB, CTA	O	Analog switch select control signal B, A	H	H
5	INT2	PSW	I	Power switch inhibit signal	H	
6	INT1	BOVR	I	14V voltage drop inhibit signal		
7	INT0		I	Unused		
8, 9	TA4IN, TA4OUT	EDP1, EDP2	I	Main encoder pulse input		
10, 11	TA3IN, TA3OUT		O	Unused		L
12, 13	TA2IN, TA2OUT		O	Unused		L
14	P53	AMUT	I	AF mute signal	L	H
15	TA1OUT	SPED	O	AT motor speed control	L	H
16	P51	LCD	O	LCD and LED serial data		H
17	P50	LCK	O	LCD and LED serial clock		H
18	P47	BLK	O	LCD all off control signal	H	L
19	P46	RBK	O	RF mute signal	L	L
20	P45	14VSW	O	Power on control signal	H	H
21	P44	ECS	O	EEPROM clock		H
22	P43	EED	I/O	EEPROM data		
23	PHI			Unused		
24	RDY		I	Bus wait cancel	H	
25	HORD		I	Hold state cancel	H	
26	BYTE		I	External data bus width 8 bit setting	H	
27	CNVss		I			
28	RESET		I	Reset signal input	L	
29, 30	Xin, Xout		I	Clock signal input		
31	E		O			
32	Vss		I			
33	HLDA					
34	ALE		O			
35	BHE					
36	R/W		O	Read/write signal		
37~44	D7~D0		I/O	Bus		
45~60	A15~A0		O	Address output		
61~64	P87~P84	PB0~PB3	O	Logic key CPU control 0~3	H	L
65	TXD0	TXD0	O	Personal computer interface serial output		H
66	RXD0	RXD0	I	Personal computer interface serial input		
67	P81	RTS0	O	Personal computer interface RTS	H	L
68	CTS0	CTS0	I	Personal computer interface CTS		
69	Vcc		I			
70	AVcc		I			
71	Vref		I			
72	AVss		I			
73	Vss		I			
74	AN7	ADR7	I	Forward wave voltage (VSF)		
75	AN6	ADR6	I	Reflected wave voltage (VSR)		
76	AN5	ADR5	I	ALC meter analog input		
77	AN4		I	Unused		
78	AN3	ADR3	I	VPWR, VMIC, VDLY, VCAR signal		
79	AN2	ADR2	I	POD2, VRF, POD2, VAF signal		
80	AN1	ADR1	I	POD1, VNB, POD1, VSQL signal		

CIRCUIT DESCRIPTION

2) CPU : 68HC05G2419553 (Control unit IC24)

Pin No.	Port name	Pin name	I/O	Function	Active level	Initial state
1	VDD		I			
2~5	PB3~PB0		I	CH4 to CH1 switch input signal from IC6		
6~13	AD0~AD7		I	Unused		
14	VrefH			Unconnected		
15	VrefL		I			
16	Vss		I			
17	VDD		I			
18, 19	XOSC1, XOSC2		I	Unconnected		
20	RES		I	Reset signal input		
21, 22	OSC1, OSC2		I	Clock input		
23	PA0	DOT	I	DOT input		
24	PA1	DASH	I	Dash input		
25	PA2	SPEED VR	I/O	KEY VR data determine port		
26~29	PA3~PA6		I	Unused		
30	PA7	int contro	O	Inhibit determine control signal	H	
31~33	PG0~PG2		I	Unused		
34	TCMP		I	Unconnected		
35	PG4		I	Unused		
36	PG5	EBSY	I	Unused		
37	PG6	MBSY	I	Unused		
38	PG7		I	Unused		
39~44	PC0~PC5		I	Unused		
45	IRQ2	sleep	I	14V voltage drop determine inhibit port		
46	PC7		I	Unused		
47	VDD		I			
48	PD0		I	Unused		
49	PD1	mbusy	O	Message busy signal		
50	PD2		I	Unused		
51	PD3	pbc	O	Beep output signal		
52	PD4		I	Unused		
53	PD5	KEY	O	Key signal output		
54	PD6		I	Unused		
55	PD7		I	Unconnected		
56~59	PE0~PE3		I	Unused		
60	Vss		I			
61~64	PE4~PE7		I	Unused		
65~72	PH0~PH7		I	Unused		
73~76	PJ0~PJ3		I	Unused		
77	PB7	WAKE UP	I	Wake up inhibit		
78~80	PB6~PB4		I	Unused		

CIRCUIT DESCRIPTION

3) Extended I/O : CXD1095Q (Control unit IC16)

Pin No.	Port name	Pin name	I/O	Function	Active level	Initial state
1, 2	NC					
3~7	PB1~PB5	SHIMO1~SHIMO5	I	Destination determine port	H	
8	PB6	50W	I	50W switch signal	L	
9	PB7	UNL	I	Unlock signal	H	
10	Vss		I			
11	PC0	ENF1	O	Serial/parallel convert enable	H	L
12	PC1	UDA23	O	Serial/parallel convert data		L
13	PC2	UCK23	O	Serial/parallel convert clock		L
14	PC3	NFMT	O	Control signal except FM transmit mode	L	H
15, 16	PC4, PC5	VB3, VB2	O	VCO band data	H	L
17	PC6	VB1	O	VCO band data	H	H
18	PC7	VB0	O	VCO band data	H	L
19	NC					
20	PD0	PLE2	O	VCO2 enable	H	L
21	PD1	PLE1	O	VCO1 enable	H	L
22	PD2	PCK	O	PLL clock		L
23	PD3	PDA	O	PLL data		L
24	PD4		O	Unused		L
25	Vss		I			
26	VDD		I			
27	PD5	DLE3	O	DDS3 enable	H	L
28	PD^	DLE2	O	DDS2 enable	H	L
29	PD7	DLE1	O	DDS1 enable	H	L
30~32	D0~D2		I/O	Bus		
33, 34	NC					
35~39	D3~D7		I/O	Bus		
40	CLR		I	Port E output register clear	L	
41	ODEN		I	Output disable	L	
42	Vss		I			
43	WR		I	Write signal	L	
44	RD		I	Read signal	L	
45	CS		I	Chip select signal	L	
46~48	A0~A2		I	Address signal		
49	PE0	P TTI	I	External AT TT input	H	
50	PE1	P TSI	I	External AT TS input	H	
51	NC					
52	PE2	MBSY	I	Electronic keyer busy signal		
53	PE3		I	Unused		
54	PA0	P TTO	O	External AT TT output	H	L
55	PA1	P TSO	O	External AT TS output	H	L
56	PA2		O	Unused		L
57	Vss		I			
58	VDD		I			
59~62	PA3~PA6		O	Unused		L
63	PA7	LOGKEY	O	Electronic keyer reset	H	L
64	PB0	SHIMO0	I	Destination determine port	H	

CIRCUIT DESCRIPTION

4) Extended I/O : CXD1095Q (Control unit IC22)

Pin No.	Port name	Pin name	I/O	Function	Active level	Initial state
1, 2	NC					
3~9	PB1~PB7		I/O	DSP bus		
10	Vss		I			
11	PC0		I	Unused		
12	PC1	KEYS	I	Electronic keyer connecting determine signal	L	
13	PC2	MD	I	Microphone UP switch signal	L	
14	PC3	MU	I	Microphone DOWN switch signal	L	
15	PC4	KEYI	I	Key input signal	L	
16	PC5	PLUL	I	PLL unlock in DSP	L	
17	PC6	EOM	I	DRU-3 EOM signal	H	
18	PC7	VBSY	I	VS-2 busy signal	L	
19	NC					
20	PD0	DRST	O	DSP reset signal Normally "H"	L	H
21	PD1	VCEN	O	Electronic volume DAC enable	L	H
22	PD2	UCK22	O	Serial/parallel convert clock signal		L
23	PD3	UDA22	O	Serial/parallel convert data signal		L
24	PD4	DREN	O	DRU-3 enable signal	L	H
25	Vss		I			
26	VDD		I			
27	PD5	PLEN	O	PLL enable in DSP	H	L
28	PD6	STR	O	VS-2 start signal	H	L
29	PD7		O	Unused		L
30~32	D0~D2		I/O	Bus		
33, 34	NC					
35~39	D3~D7		I/O	Bus		
40	CLR		I	Port E output register clear	L	
41	ODEN		I	Output disable	L	
42	Vss		I			
43	WR		I	Write signal	L	
44	RD		I	Read signal	L	
45	CS		I	Chip select signal	L	
46~48	A0~A2		I	Address signal		
49	PE0	HENA	O	DSP enable A	L	H
50	PE1	HENB	O	DSP enable B	L	H
51	NC					
52	PE2	HRW	O	DSP R/W signal		H
53	PE3		O	Unused		L
54~56	PA0~PA2		O	DSP address signal		L
57	Vss		I			
58	VDD		I			
59	PA3		O	Unused		L
60	PA4	P BEEP	O	Beep output signal	H	L
61	PA5	P CKY	O	Transmit output control signal	H	L
62	PA6	P RXC	O	Receive control signal	H	H
63	PA7	P TXC	O	Transmit control signal	H	L
64	PB0		I/O	DSP bus		

CIRCUIT DESCRIPTION

5) Extended I/O : CXD1095Q (Control unit IC23)

Pin No.	Port name	Pin name	I/O	Function	Active level	Initial state
1, 2	NC					
3~9	PB1~PB7	P K1~P K7	I	Key matrix input	L	
10	Vss		I			
11	PC0	6KFIL	O	Analog filter select signal	H	L
12	PC1	3KFIL	O	Analog filter select signal	H	H
13	PC2	15KFIL	O	analog filter select signal	H	L
14~16	PC3~PC5	P ENR3~P ENR1	O	RF serial/parallel convert enable	H	L
17	PC6	P UDA21	O	Serial/parallel convert data		L
18	PC7	P UCK21	O	Serial/parallel convert clock		L
19	NC					
20~22	PD0~PD2		O	Unused		L
23	PD3	P APRE	O	AT motor control signal		L
24	PD4	P PR22	O	AT motor 2 control signal		L
25	Vss		I			
26	VDD		I			
27	PD5	P PR21	O	AT motor 2 control signal		L
28	PD6	P PR12	O	AT motor 1 control signal		L
29	PD7	P PR11	O	AT motor 1 control signal		L
30~32	D0~D2		I/O	Bus		
33, 34	NC					
35~39	D3~D7		I/O	Bus		
40	CLR		I	Port E output register clear	L	
41	ODEN		I	Output disable	L	
42	Vss		I			
43	WR		I	Write signal	L	
44	RD		I	Read signal	L	
45	CS		I	Chip select signal	L	
46~48	A0~A2		I	Address signal		
49	PE0	P THP	I	Thermal protection signal	H	
50	PE1	P SS	I	Microphone PTT switch signal	L	
51	NC					
52	PE2		I			
53	PE3		O	Unused		L
54	PA0	P DIM	O	Dimmer control signal	H	H
55, 56	PA1, PA2	P ENL3, P ENL2	O	LCD driver enable signal	H	L
57	Vss		I			
58	VDD		I			
59	PA3	P LATC	O	AT LED	H	L
60, 61	PA4, PA5	P ENL1, P ENL4	O	Switch serial/parallel convert enable	H	L
62, 63	PA6, PA7		O	Unused		L
64	PB0	P K0	I	Key matrix input	L	

CIRCUIT DESCRIPTION

TX-RX Unit (DSP Operation)

■ Outline

The TS-870S uses the DSP to carry out various processing as compared with the conventional models. They include the following:

- Modulation and demodulation
- Filter processing
- AGC processing (S-meter data output)
- Mic amplifier AGC processing
- VOX processing
- Voice equalizing processing
- Noise processing (noise reduction, beat cancel, automatic notch)
- Speech processing (COMP meter data output)
- Squelch processing
- Sidetone and beep generation

The commands and data for the microprocessor are listed below (see page 42).

The TX-RX unit circuits are divided into the analog section that processes analog signals and digital section that processes digital data. The interface between the analog and digital sections is the analog-to-digital converter (IC25 : AK5340-VS) and digital to analog converter (IC16 and IC27 : AK4318-VS, IC34 : PCM69AU).

The unit has another digital to analog converter (IC26 : M62363FP) for VCA (electronic volume : M51131L) control. The volume is controlled directly by the microprocessor in the control unit (the volume is not controlled by the DSP).

■ Digital section

The digital section is explained below. Figure 17 is a digital section block diagram.

The digital section consists of two DSPs (IC1 and IC2 : DSP56002FC40), RAM (IC7 : MCM56824AFN2*), three ROMs (IC4, IC5, IC6 : 27C256PCJJ**), and gate array (IC3 : MBCG24173-6173) and PLD (IC9 : 7032LC44JLQ*). The TX-RX unit has a PLL, but it is included in the digital section for convenience. * indicates the version number.

The PLL in the TX-RX unit is controlled directly by the microprocessor in the control unit, and clocks of a fixed frequency of 46.32MHz are generated. This circuit forms a VCO consisting of Q8 : 2SK210(GR), Q9 and Q10 : 2SC2714(Y). Q8 is an oscillator and Q9 and Q10 are buffer amplifiers. Q5, Q6, and Q7 comprise an active low-pass filter. This low-pass filter converts the output from PLL IC IC15 : MB86001PF to DC voltage and sends it to the VCO.

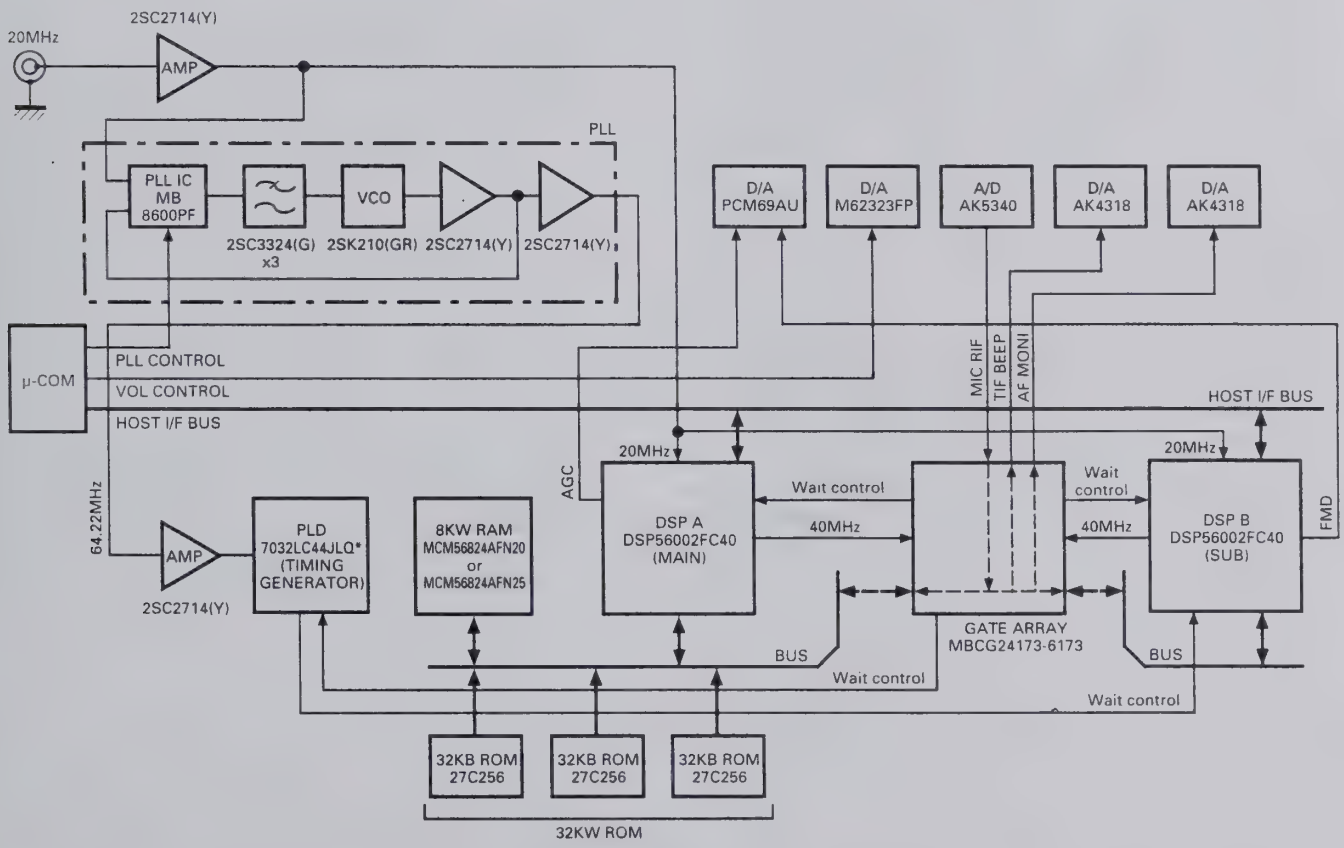

Fig. 17 Digital section block diagram

CIRCUIT DESCRIPTION

Figure 18 is a block diagram of the PLD (Programmable Logic Device). The clock with a sampling frequency fs (45.234375kHz) is generated from the 46.32MHz clock produced by the PLL in the TX-RX unit by the clock divider in the PLD. This clock is used for data transmission and reception between the analog-to-digital and digital to analog converters and gate array and data transmission and reception between the gate array, DSP, and the analog to digital and digital to analog converters. The PLD forms part of the bus control circuit for sharing the RAM and ROM with two DSPs and the circuit that accesses the ROM.

The gate array is used as the interface between the analog to digital and digital to analog converters and the DSP. Data is received from the analog to digital converter, or transmitted to the digital to analog converter, and each DSP is interrupted in the 1/fs sampling intervals. The gate array interfaces two DSPs for communication, and the two other DSPs control the bus for sharing the RAM and ROM.

The DSP has a 24 bit fixed-decimal DSP. It operates with the 40MHz clock, but the external 20MHz clock is given to the DSP. The DSP operates the 40MHz clock generated in the PLL in the IC. The clock is programmed to be output to pin 123 (CKOUT) of the DSP. Transfer of commands with the microprocessor is carried out through the host interface of the DSP.

The ROM and RAM are shared by two DSPs. When one of the DSPs is being accessed, the other DSP waits. It is carried out by the gate array and PLD. Three 8 bit ROMs are used to implement 24 bits.

The analog to digital converter (IC25 : AK5340-VS) is an 18 bit Δ-Σ type ADC for audio equipment. There are two channels, R and L. The R channel is used for the receive signal and the L channel is used for the microphone input signal. The digital to analog converter (IC16 and IC27 : AK4318-VS) is a 18 bit Δ-Σ type DAC for audio equipment. The digital to analog converter has two channels like the analog to digital converter : IC16 uses the R channel for the beep signal and the L channel for the transmit signal, and IC27 uses the R channel for the monitor signal and the L channel for the decode signal. Another digital to analog converter (IC34 : PCM69AU) is an 18 bit DAC for audio equipment, and uses the Rch for AGC and the L channel for audio signals in FM.

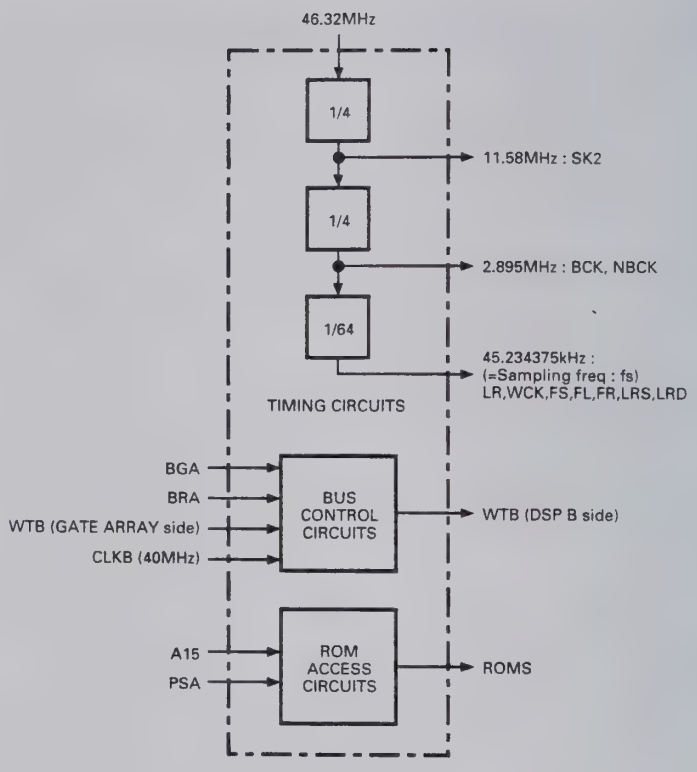

Fig. 18 PLD block diagram

■ Flow of transmit/receive signals

Flow of transmit/receive signals is explained below, together with the analog and digital sections. Flow of receive signals is explained first. See Figure 19.

The receive signal input from pin 3 (RIF) of CN1 is amplified by IC43 : NJM5532M. If a HIGH signal is input to RIF, its amplitude is limited to prevent any signal that exceeds the input range to the analog to digital converter (IC25 : AK5340-VS). The signal is passed through the band-pass filter and buffer amplifier, and its frequency is converted by the mixer (IC18 : MC74HC4053F). The frequency of the receive signal is about 1/4 of sampling frequency fs. The fs/4 frequency is the most stable frequency for digital signal processing. The receive signal of the fs/4 frequency is passed through the buffer amplifier, amplified by amplifier IC21 : NJM4560M, and converted to digital data by the analog to digital converter (IC25).

CIRCUIT DESCRIPTION

This data is read into the gate array (IC3 : MBCG 241873-6173) in sampling intervals 1/fs. The data read into the gate array is fed to the DSP in 1/fs for processing. DSP A (IC1 : DSP56002FC40) carries out auto notching, demodulation, noise processing, and squelch processing, and DSP B carries out AGC and filter processing.

AGC data, one of the DSP B operation results, is sent to the digital to analog converter (IC34 : PCM69AU) from pin 33 of DSP B (IC2: DSP56002 FC40) in 1/fs intervals. AGC data is converted to an analog current by IC34, and converted to an analog voltage by the I-V converter IC35 : AD822AR, and is output to the RF unit as the AGC voltage. The AGC voltage is reversed by the reversing amplifier IC35 : AD822AR, and the S-meter voltage used for packet communication is generated and output from the SMET terminal of ACC2 (J5).

The digital data demodulated by two DSPs is sent to the gate array in 1/fs intervals. The data is sent to the digital to analog converter (IC27 : AK4318-VS) from pin 68 of the gate array in 1/fs intervals and converted to an analog signal. The demodulate signal converted to an analog signal is passed through the third low-pass filter IC28 : NJM2100M. This low-pass filter eliminates the alias components. The demodulate signal then enters the VCA (IC29 : M51131L). The VCA attenuates and outputs the demodulate signal according to the voltage given to pin 8 of IC29. The voltage at pin 8 is the voltage corresponding to the rotational angle of the AF VOL, and is controlled by the microprocessor in the control unit. The demodulate signal is passed through the VCA, amplified by the AF amplifier (IC33 : LA4422), and output to the speaker and headphone.

Demodulation data used for packet communication is passed through low-pass filter IC28 : NJM2100M, then attenuated by the VCA IC31 : M51131L. The attenuation amount is determined by the value set on the menu. The signal is passed through the VCA and ACC2 (J5) through the buffer amplifier Q17 : 2SC 2412K(S), and output to the TNC.

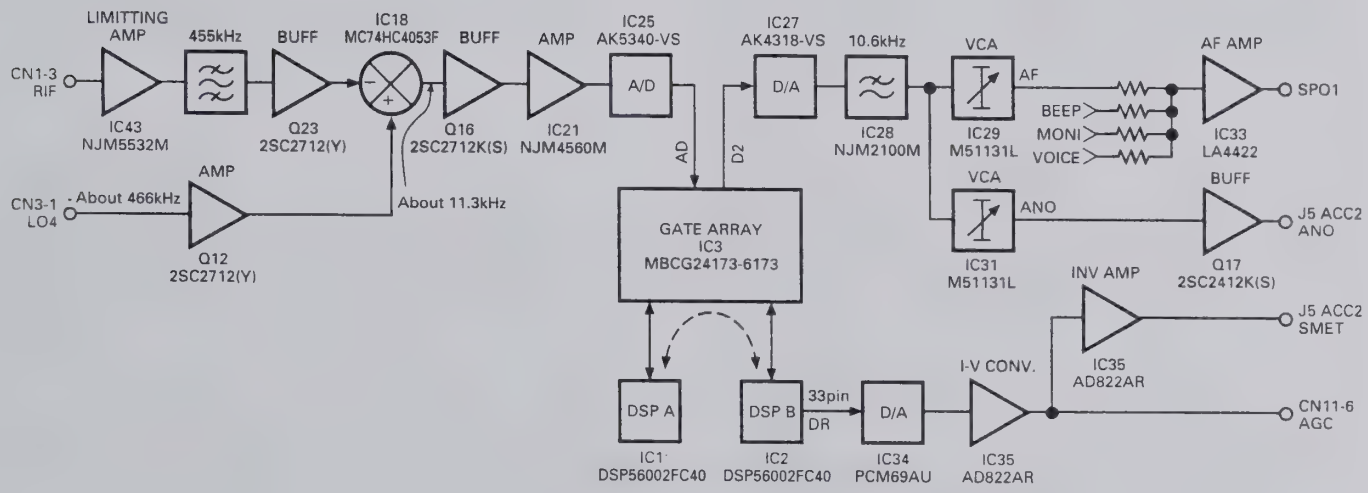

Fig. 19 Flow of receive signal

CIRCUIT DESCRIPTION

Then, flow of transmit signals is explained below. See Figure 20. If the mode is SSB, FM, or AM, the signal from the microphone is input. The signal enters the TX-RX unit through CN4. The signal is amplified by amplifier IC22 : AD822AR, and goes to the multiplexer (IC23 : MC74HC4052F). The multiplexer is used to switch between the microphone signal, the play signal from the DRU-3 (option), and packet signal. The signal passing through the multiplexer is amplified by amplifier IC24 : NJM2100M, and converted to digital data by the analog to digital converter (IC25 : AK5340-VS). The data is read into the two DSPs in the same way as for the receive signal. In transmit mode, DSP A carries out modulation, speech processing, and carrier signal generation in CW, FSK, and FM modes, while DSP B carries out VOX processing, voice equalizing processing, preemphasis processing (in FM mode), and microphone amplifier AGC processing.

The DSP does not perform modulation in FM mode. The DSP sends a 455kHz carrier signal from pin 1 (TIF) of CN1, adds subtone to the carrier signal, preemphasizes sounds, and limits the amplitude. Preemphasized audio data is sent from pin 33 of DSP A (IC1 : DSP56002FC40) to the digital-to-analog converter (IC34 : PCM69AU) in 1/fs intervals, and converted to an analog current. The analog current is converted to the audio signal of the analog voltage by the I-V converter IC36 : NJM4560M. IC36 also serves as the third low-pass filter that eliminates the alias components of the audio signal. The analog audio data signal is output from pin 3 (FMD) of CN3 to the PLL section.

The data modulated by the two DSPs (including FM carrier data) is sent to the gate array in the process as the demodulated signal. The signal is sent from pin 60 of the gate array to the digital to analog converter (IC16 : AK4318-VS) in 1/fs intervals, and converted to an analog signal. The frequency of this signal is fs/4. The analog modulated signal is passed through the third low-pass filter IC17 : NJM2100M to eliminate alias components. The signal is converted to the 455kHz IF signal by the mixer (IC18 : MC74HC4053F) and two ceramic filters (CF2 and CF3), and output from pin 1 (TIF) of CN1.

Monitor data, one of the DSP operation results, is sent to the gate array in the same process as the demodulate signal. Like the demodulate signal, the signal is sent from pin 68 of the gate array to the digital to analog converter (IC27 : AK4318-VS), and converted to an analog signal. The analog sidetone signal is passed through the third low-pass filter IC30 : NJM2100M and attenuated by VCA (IC31 : M51131L). The attenuation is determined by the rotational angle of MONI VOL. The flow of the signal after passing through the VCA is the same as for the demodulate signal.

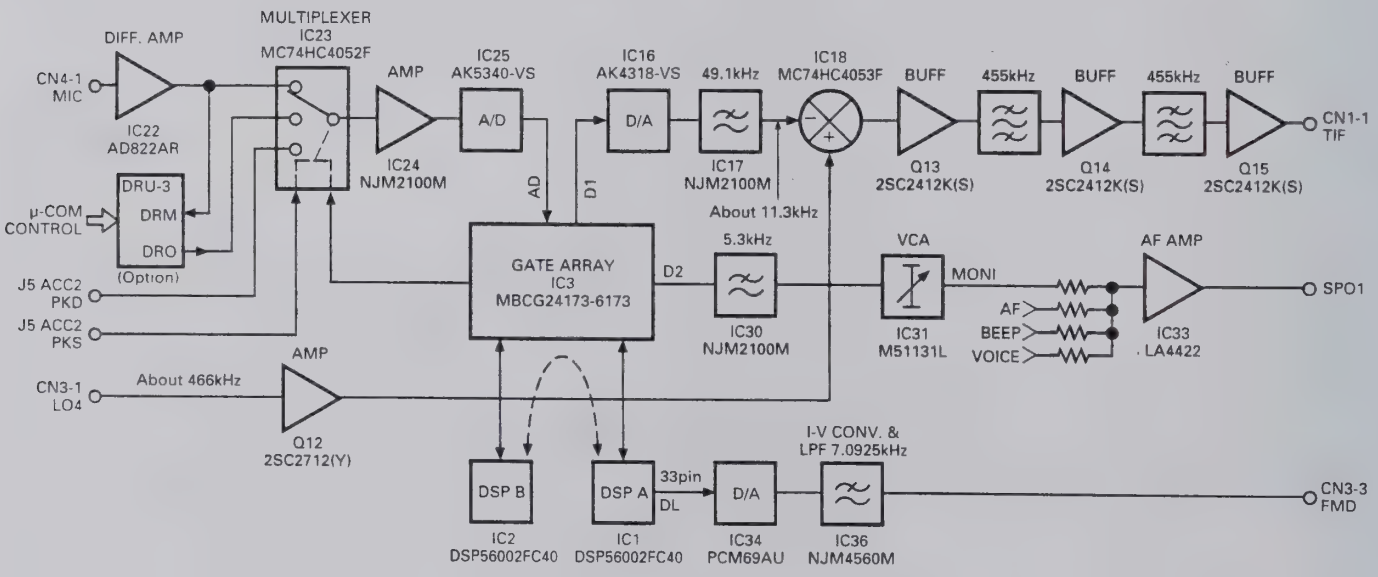

Fig. 20 Flow of transmit signal

CIRCUIT DESCRIPTION

■ Sidetone signal flow

When the electronic keyer is pressed, the sidetone is output. The sidetone is processed by DSP A. Sidetone data, a DSP A operation result, is output to the speaker or headphone in the same process as the monitor data. See Figure 21.

■ FSK tone signal flow

The flow of the FSK tone signal is the same as that of the sidetone. See Figure 21.

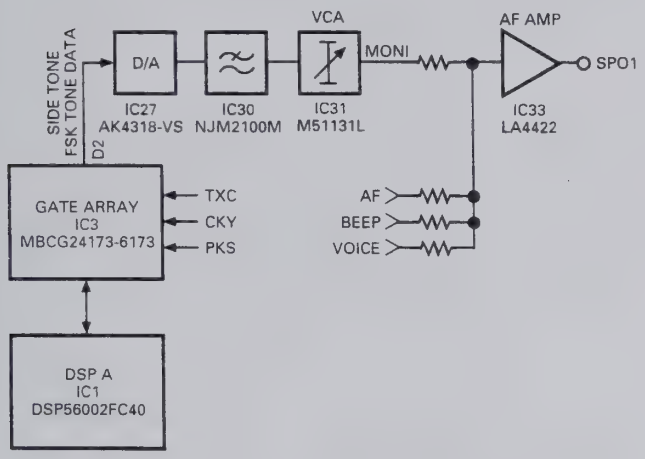

Fig. 21 Sidetone and FSK tone signal flow

■ Beep signal flow

When pin 6 (BEEP) of CN7 goes HIGH, DSP A sends beep data to the gate array in the same process as the demodulate signal. Like modulation data, the signal is sent from pin 60 of the gate array to the digital to analog converter (IC16 : AK4318-VS) in 1/fs intervals, and converted to an analog signal. The analog beep signal is passed through the primary low-pass filter IC19 : NJM4560M, and attenuated by VCA (IC29 : M51131L). The attenuation is determined by the value set on the menu. The flow of the signal after passing through the VCA is the same as for the demodulate signal.

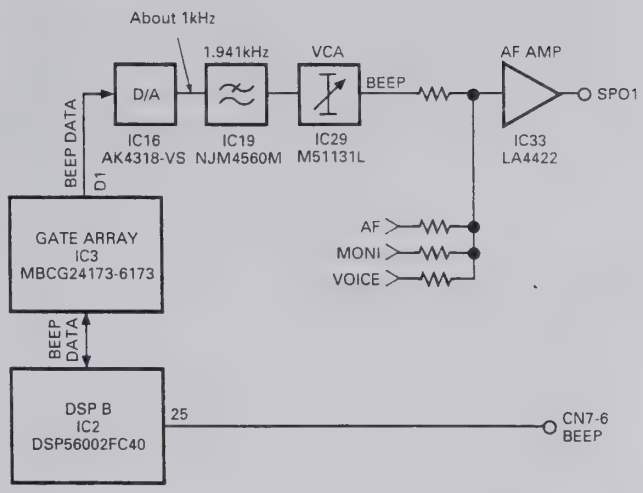

Fig. 22 Beep signal flow

■ DRU-3 recording and playback

The DRU-3 is controlled by the microprocessor in the control unit. During the DRU-3 recording, the MIC signal amplified by the differential amplifier (IC22 : AD822AR) is input to the DRU-3, and recorded. During DRU-3 playback, the playback signal is input to the analog-to-digital converter by switching the multiplexer (IC23 : MC74HC4052F). When the DSP receives a command "VOX ON and DRU playback" from the microcomputer, pin 38 of DSP B (IC2 : DSP56002FC40) goes HIGH and the SS line goes LOW. When the SS line goes LOW, the microprocessor sets the transceiver to transmit mode. This operation does not occur at the playback sound level of the DRU-3. Even if no sound is recorded, the transceiver enters the transmit mode when a DRU playback command arrives while VOX is ON. See Figure 20.

■ VS-2 audio signal flow

The audio signal output from the VS-2 is not processed by the DSP. The signal is amplified by the AF amplifier, and output to the speaker or headphone. The VS-2 is controlled by the microprocessor. See Figure 23.

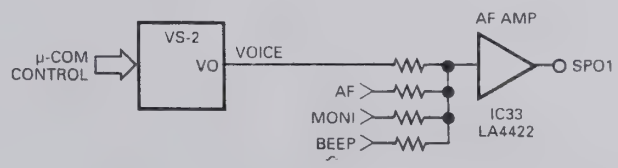

Fig. 23 VS-2 audio signal flow

CIRCUIT DESCRIPTION

■ Commands and data transferred to or from the microprocessor

To understand the DSP processing, the commands sent from the microcomputer to the DSP, and data sent from the DSP to the microcomputer are described below.

For details of error status, see the error list (Table 10).

1) Microprocessor → DSP

- Transmit mode
- Transmit filter
- CW rise (fall) time
- FSK shift width
- Squelch level
- Applicable filter follow speed
- SPAC interrelation time
- Check mode operation setting
- VOX delay time
- AGC release time
- TX AGC release time
- AGC correction
- TX equalizing
- FM modulation
- Processor compression level (LOW)
- Processor compression level (MID)
- Processor compression level (HIGH)
- RX AF AGC gain (AM/FM)
- RX AF AGC gain release time (AM/FM)
- TX AGC gain (packet input)
- Receive mode
- Receive filter
- CW pitch frequency
- FM subtone frequency
- Noise/interference elimination mode setting
- Auto notch follow speed
- Operation flag 1
- VOX gain
- RF gain (AGC)
- TX AGC gain
- AM modulation
- Carrier level
- Operation flag 2

2) DSP → Microprocessor

- S-meter data
- Compression level data
- Squelch status
- Microphone level data
- Error status
- Check mode status

Error No.	Error description
00	TX-RX unit is not connected.
01	Main DSP stack error
02	Main DSP trace error
03	Main DSP software interrupt
04	Main DSP SSI reception
05	Main DSP SSI exceptional reception
06	Main DSP SCI reception
07	Main DSP SCI exceptional reception
08	Main DSP SCI transmission
09	Main DSP SCI line idle detection
0A	Main DSP NMI
0B	Main DSP invalid command detection
0C	Command cannot be transferred from the main DSP to the sub DSP.
10	RAM check error 1
11	RAM check error 2
12	Gate array check error
21	Sub DSP stack error
22	Sub DSP trace error
23	Sub DSP software interrupt
24	Sub DSP SSI reception
25	Sub DSP SSI exceptional reception
26	Sub DSP SCI reception
27	Sub DSP SCI exceptional reception
28	Sub DSP SCI transmission
29	Sub DSP SCI line idle detection
2A	Sub DSP NMI
2B	Reserved
2C	Reserved
2D	Sub DSP invalid command detection
2E	Reserved
F0	Main DSP timeover error
F1	Sub DSP timeover error
FD	PLL unlock (TX-RX unit)
FE	PLL unlock (RF unit PLL section)
FF	Temperature protection error

Table 10 Error list

CIRCUIT DESCRIPTION

■ New function circuit

The TS-870S noise processing, auto notch, line enhancer, SPAC, and beat cancel functions are characteristics of the DSP digital signal processing. These functions and other features are described below.

1) Auto notch

The auto notch corresponds to the IF filter used in the previous models. It is an adaptive filter, and emphasizes weak signals by tracking interfering signals automatically in the AGC loop (the reception gain increases). The notch filter has very good damping and frequency characteristics in the receiving bandwidth.

2) Beat cancel

The "beat cancel" corresponds to the AF filter used in the previous models. It also is an adaptive filter, and finds and removes beat components from the received signal. Unlike the notch filter, this filter removes multiple beats, but it does not emphasize weak signals even if the beat is canceled.

3) Noise reduction

The TS-870S uses a line enhancer or SPAC to reduce noise. One of these two functions should be assigned to the N.R. key on the front panel.

The line enhancer is an adaptive filter which does not attenuate the target signal, but attenuates only noise. If the conditions are not very bad, the S/N ratio can be improved greatly.

Select SPAC to improve the S/N ratio effectively. SPAC stands for "Speech Processing System by use of Auto Correlation function." It takes the periodical signal (target reception signal) and suppresses noise using the Auto Correlation function. Since SPAC takes reception signals with a certain time width, the signals become discontinuous and cause noise.

Since the auto notch, beat cancel, and line enhancer are adaptive filters, their characteristics change according to the input signal. If the automatic tracking is set to OFF on the menu when the filter effect is good under good signal conditions, the effect does not change even if the conditions turn bad.

4) VOX

DSP processes the correlation between the received signal and signal from the microphone, and carries out the conventional anti-VOX processing. Therefore, TS-870S does not have anti-VOX.

5) SSB modulation/demodulation

TS-870S uses the PSN modulation/demodulation used for TS-950 and subsequent models. With the increase in the DSP operation precision, the side-band suppression has been improved in a very wide bandwidth from 25Hz to 6kHz (80dB or more for modulation and 90dB for demodulation). The PSN method does not eliminate all group-delay distortion because the Hilbert converter uses an IIR filter. The TS-870S uses a linear phase shifter with a Hilbert converter containing an FIR filter. As the FIR filter can keep group delay constant, it does not cause group-delay distortion. However, as the group-delay itself increases, if the linear phase shifter is set to ON via the menu, a signal is transmitted several ms after a voice enters the microphone.

■ Analog section and other circuits

The analog section and other circuits were described in the flow of transmission and reception signals. This section describes the circuits that were not explained in the flow of transmission and reception signals.

1) Reference voltage circuit

Since TS-870S does not have a negative power supply, a 2.5V reference voltage, which is half the power supply voltage, is supplied to the OP amplifier to process analog signals linearly. Fig. 24 shows this circuit. 2.5V are produced by dividing the power supply voltage by R129 and R132. This voltage is provided to the circuitry through buffer amplifier IC19 or IC20.

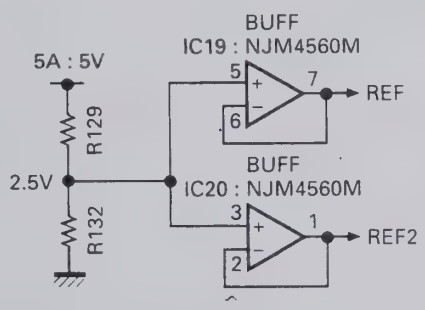

Fig. 24 Reference voltage circuit

CIRCUIT DESCRIPTION

2) Pop mute circuit

The mute circuit shown in Fig. 25 reduces the pop sound when the power is switched ON and OFF. If CN7 pin 16 AMUT is LOW, the mute circuit consisting of IC44 : TC7S04F and Q22 : DTC124EK mutes the AF amplifier (IC33 : LA4422) and suppresses the pop sound when the power is turned ON. A microprocessor controls AMUT and cancels muting at an appropriate time.

When the power is turned OFF, muting is also controlled by AMUT, but is done only if the power switch ON TS-870S is pressed. The circuit comprising Q25 : DTA143EK, Q26 : DTC124XK, and Q27 : DTC143EK suppresses the pop sound when the external power supply switch is turned OFF. When this switch is turned OFF, the voltage of the AF amplifier power supply 14A decreases. When the 14A voltage falls, Q25 becomes active (ON), and then Q26 becomes active (the collector goes LOW to mute the AF amplifier and suppress the pop sound. Q27 prevents muting when the voltage of the AF amplifier power supply 14A falls during transmission.

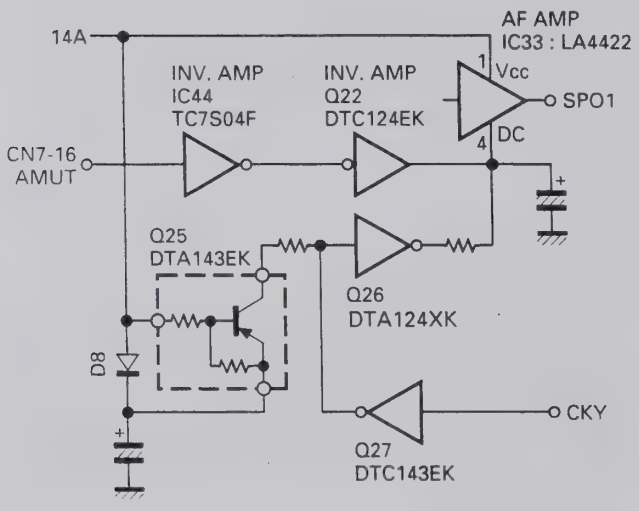

The TS-870S uses AF amplifier IC33: LA4422 pin 4 (DC) as the mute pin.

Fig. 25 Pop mute circuit

■ Transmit/receive frequency characteristics correction circuit

The transmission sound quality has a flat frequency characteristic due to DSP modulation. However, the low-frequency range is also flat to the cut-off frequency, so the model has less clarity compared to the conventional transceivers. A correction circuit is provided to suppress the low-frequency range. It consists of R141, R155, and C145 in the TX-RX unit, and it is –2dB at 300Hz for 1kHz.

To return to the flat frequency characteristic, remove C145 and replace R155 with a 1.8kΩ resistor. (See Figure 26.)

The receive frequency is also flat, as well as the hi-fi sound quality when the filter is widened. When the receive frequency is flat, the volume of the low-frequency range becomes insufficient, so a correction circuit that slightly emphasizes the low-frequency range is provided. It consists of R204, R205, R208, and C208 in the TX-RX unit, and it is +2dB at 1kHz for 3kHz.

To return to the flat frequency characteristic, remove R205. (See Figure 26.)

Transmit side

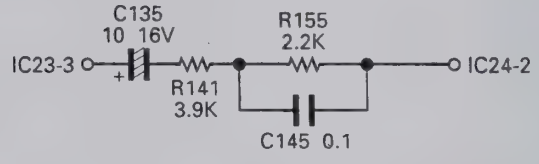

Receive side

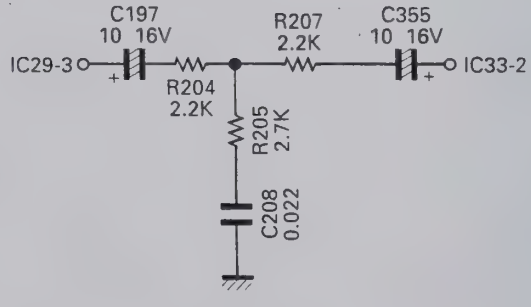

Fig. 26 Transmit/receive frequency characteristics correction circuit

DESCRIPTION OF COMPONENTS

RF UNIT (X44-3210-00) (A/9) : RF

Ref. No.	Use/Function	Operation/Condition
Q1	Switching	On when exit RX on.
Q2	Switching	On when TX.
Q3	Switching	Off when ATT1 or ATT2 on.
Q5	TX RF amplifier	Drive output (TX frequency)
Q6	Switching	DATT on
Q7	Switching	1/2 : 30kHz~490kHz 2/2 : 490kHz~1.62MHz
Q8	Switching	1/2 : 1.62MHz~2.49MHz 2/2 : 2.49MHz~3.99MHz
Q9	Switching	1/2 : 3.99MHz~6.99MHz 2/2 : 7.30MHz~10.49MHz
Q10	Switching	1/2 : 6.99MHz~7.30MHz 2/2 : 13.99MHz~14.49MHz
Q11	Switching	1/2 : 20.99MHz~21.49MHz 2/2 : 21.49MHz~30.00MHz
Q12	Switching	1/2 : 14.49MHz~20.99MHz 2/2 : 10.49MHz~13.99MHz
Q13	RF amplifier	21.49MHz~30.00MHz
Q14, 15	RF amplifier	30kHz~21.49MHz
Q16	Amplifier	LO1 : 73.08MHz~103.05MHz
Q17~20	Mixer	$f_{LO1} - f_{RF}$ = 73.05MHz
Q21	Ripple filter	14S
Q22	Amplifier	73.05MHz
Q23	Mixer	73.05MHz – 64.22MHz = 8.83MHz
Q24	Amplifier/AGC	73.05MHz
Q26, 27	Mixer	73.05MHz – 64.22MHz = 8.83MHz
Q28	Amplifier	8.83MHz
Q29~31	Amplifier/AGC	8.83MHz
Q32	AGC	NB (Noise blanker)
Q33	Amplifier/AGC	8.83MHz
Q35, 36	Mixer	73.05MHz → TX f
Q37, 38	Mixer	8.83MHz → 73.05MHz
Q39	Amplifier	TX IF
Q42	Switching	RF blanking
Q43, 44	DC amplifier	ALC
Q45, 46	Switching	On when AM mode.
Q47	DC amplifier	ALC
Q48	Switching	On when AM transmission mode.
Q49	Switching	
Q50	DC amplifier	ALC amplifier
Q51	Switching	Pulse generate when AM transmission mode.
Q52	DC amplifier	ALC amplifier
Q54	Switching	Off when NB.
Q55	Switching	Make relay for linear.
Q56	Switching	On when TX.
Q57, 59	Switching	TXB generate
Q58, 60	Switching	RXB generate
Q61	Switching	On when AIP off (0~21.49MHz).
Q62	Switching	On when AIP off (21.49~30MHz).
Q63	Switching	On when AIP off.
Q64	Switching	On when AIP on.
Q65	Switching	12V when RX.
Q66	Switching	On when RX.
Q70, 71	Switching	CKY
IC1	Serial/Parallel conversion	BPF selection
IC2	Serial/Parallel conversion	
IC6	OP amplifier	ALC meter
IC7	DAC	8 ch
IC8	Meter amplifier	VSF, VSR, ALC and Processor

DESCRIPTION OF COMPONENTS

Ref. No.	Use/Function	Operation/Condition
IC9	Comparator	NB pulse
IC10	AVR	8V → 5V
D1~3	Relay surge absorption	
D4~7	Large input protection	
D8	RF switch	On when RX.
D10	RF switch	On when TX.
D11~33, 35	RF switch	BPF switch
D36, 37	RF switch	On when AIP on.
D38, 39	RF switch	ON when 21.49MHz or more RF amplifier selection.
D40, 41	RF switch	On when 21.50MHz or less RF amplifier selection.
D42	RF switch	
D43	RF switch	LO2 (64.22MHz) switch
D46	RF switch	Noise detection
D47	RF switch	TGC voltage control
D49	RF switch	Gain control
D50	Zener diode	–6.2V stability
D51	LED	Voltage generate
D52	Zener diode	12V (ALC voltage for linear)
D53	Switch	Pulse generate
D54	Reverse current prevention	
D55	Zener diode	3V (Voltage shift)
D56	Switch	ALC
D57	LED	CKY
D58	Relay surge absorption	
D59	Reverse current prevention	RBK
D60	RF switch	On when 29MHz.
D61	RF switch	On when AIP on.
D62	RF switch	On when RX.
D63, 64	RF switch	8.83MHz filter changeover (15kHz).
D65, 66	RF switch	8.83MHz filter changeover (3kHz).
D67	RF switch	8.83MHz filter changeover (6kHz).
D68	RF switch	On when TX.
D69	RF switch	8.83MHz filter changeover (6kHz).
D70	Zener diode	6.2V (Voltage shift)
D71	Zener diode	4.7V (Voltage stability)
D72	Switch	CKY

RF UNIT (X44-3210-00) (B/9) : PLL

Ref. No.	Use/Function	Operation/Condition
Q500	Buffer	D/A buffer
Q501	Amplifier	20MHz (fSTD)
Q502	Mixer IC506 input buffer	5.46~4.46MHz
Q503	Buffer	D/A buffer
Q504, 505	Switching	Chopper
Q506	Buffer	Output for chopper
Q507	Amplifier	LO3 (8.375MHz)
Q508	Buffer	For LO3 output
Q510	Buffer	D/A buffer
Q511	Buffer	For LO4 output
Q512	Amplifier	REF 20MHz
Q513	Tripled circuit	fSDT x 3 = 60MHz
Q514, 515	Buffer	Reference oscillator 20MHz
Q516	VCO A changeover	
Q517	VCO B changeover	

DESCRIPTION OF COMPONENTS

Ref. No.	Use/Function	Operation/Condition
Q518	VCO C changeover	
Q519	VCO D changeover	
Q520	VCO A	73.08~80.54MHz
Q521	VCO B	80.54~87.54MHz
Q522	VCO C	87.54~94.54MHz
Q523	VCO D	94.54~103.05MHz
Q524	Buffer	VCO A~VCO D output (73.08~103.05MHz)
Q525	Mixer IC508 input buffer	73.08~103.05MHz
Q526	Buffer	For LO1 output
Q527	Active LPF	Comparison 1MHz
Q528, 529	Active LPF	
Q530	Amplifier	PLL IC IC507 input (18~48MHz)
Q531	Amplifier	18~48MHz
Q532	Amplifier	LO2A output (64.22MHz)
Q533	Switching	PLL unlock signal output ("H" : Unlock)
Q534~536	Active LPF	Comparison 20kHz (5kHz in FM mode)
Q537	Switching	FM modulation input on/off
Q539	Buffer	For LO2A outrput
Q800	Reference oscillator	Reference frequency 20MHz oscillation.
IC500	DDS	1.46~0.46MHz for LO1
IC501	DDS	1.625MHz for LO3
IC502	DDS	For LO4
IC503	Divider	20MHz x (1/5) = 4MHz
IC505	Mixer	1.46~0.46MHz → 5.46~4.46MHz
IC506	Mixer	5.46~4.46MHz → 54.54~55.54MHz
IC507	PLL	2~5 : Frequency division ratio input 6 : 18~48MHz input 9 : Lock voltage output 11 : Unlock output (Unlock : "L") 15 : 20MHz input
IC508	Mixer	73.05~103.05 + 54.54~55.54 = 18~48MHz
IC509	PLL	2~5 : Frequency division ratio input 6 : 64.22MHz input 9 : Lock voltage output 11 : Unlock output (Unlock : "L") 15 : 20MHz input
IC510	AVR	13.8V → +9V
IC511	AVR	13.8V → +9V low drop-out
D500	Vari-cap diode	VCO A
D501	Switching	VCO A output
D502	Vari-cap diode	VCO B
D503	Switching	VCO B output
D504	Vari-cap diode	VCO C
D505	Switching	VCO C output
D506	Vari-cap diode	VCO D
D507	Switching	VCO D output
D508	Reverse current prevention	Unlock signal detection

FINAL UNIT (X45-351X-XX) (A/5) : FINAL 0-00 : K,P,M,M2,X 2-71 : E,E2,E3,E9

Ref. No.	Use/Function	Operation/Condition
Q501	Pre-drive amplifier	Wide-band amplification of HF band
Q502, 503	Drive amplifier	Push-pull wide-band amplification of HF band
Q504	Drive bias supply	Temperature compensation of drive
Q505, 506	Final amplifier	Push-pull wide-band amplification of HF band
Q507	Final bias supply	Temperature compensation of final
D501	Temperature compensation	Temperature sensing of pre-drive
D502	Temperature compensation	Temperature sensing of drive
D503	Temperature compensation	Temperature sensing of final
D504	Reverse power connection protection	

DESCRIPTION OF COMPONENTS

FINAL UNIT (X45-351X-XX) (B/5) : FILTER

Ref. No.	Use/Function	Operation/Condition
Q1~5	Relay driver	
Q6	Switch	Antenna tuner through tune
Q10~16	Relay driver	
IC1	Band data decoder	
D1	High-frequency rectification	Reflected wave rectification
D2	High-frequency rectification	Forward wave rectification
D3	Voltage stabilization	5.1V
D4	Relay surge absorption	1.6~2.0MHz LPF relay
D5	Relay surge absorption	2.0~4.0MHz LPF relay
D6	Relay surge absorption	4.0~7.5MHz LPF relay
D7	Relay surge absorption	7.5~10.5MHz LPF relay
D8	Relay surge absorption	10.5~14.5MHz LPF relay
D9	Relay surge absorption	14.5~21.5MHz LPF relay
D10	Relay surge absorption	21.5~30.0MHz LPF relay
D11	Switching	

FINAL UNIT (X45-351X-XX) (C/5) : CONNECTION

Ref. No.	Use/Function	Operation/Condition
Q401~403	DC/DC	–6V
Q404	Ripple filter	14S → 14V
Q405	Ripple filter, AVR	
Q460, 461	Mixer	RX
Q470, 471	Mixer	TX
Q472, 475	Amplifier	TX IF
IC402	5V AVR	8V → 5V (For PLL)
D401	Rectification	
D402	Current stabilization	9V
D450	Reverse current prevention	
D451~456	RF switch	BPF switch
D457	Reverse current prevention	

FINAL UNIT (X45-351X-XX) (D/5) : AVR

Ref. No.	Use/Function	Operation/Condition
Q601	Switch	14S supply when power switch on.
Q701	Switch	On when fan operation
Q702, 703	Switch	Fan motor drive
IC601	8V AVR	13.8V → 8V (Analog 8V : 8A)
IC602	8V AVR	13.8V → 8V (Digital 8V : 8D)
IC701	Comparator	Fan control
D601	Relay surge absorption	
D701	Reverse current prevention	
D702	Surge absorption	

FINAL UNIT (X45-351X-XX) (E/5) : RELAY

Ref. No.	Use/Function	Operation/Condition
D301	Lightning surge protection	ANT1
D302	Lightning surge protection	ANT2
D303	Relay surge absorption	Antenna changeover relay
D304	Relay surge absorption	TX/RX changeover relay

DESCRIPTION OF COMPONENTS

AT UNIT (X53-3340-02)

Ref. No.	Use/Function	Operation/Condition
Q1, 2	Amplifier	Waveform shaping
Q3	Switching	On when APRE is "H".
Q4, 5	Switching	Motor speed control pulse
IC1	DFF	Phase difference detection 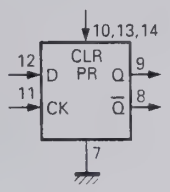 Function table INPUTS: CLOCK, D; OUTPUTS: Q, Q ↑ L L H L X Qo $\overline{Qo}$
IC2	Analog switch	For control changeover motor 1 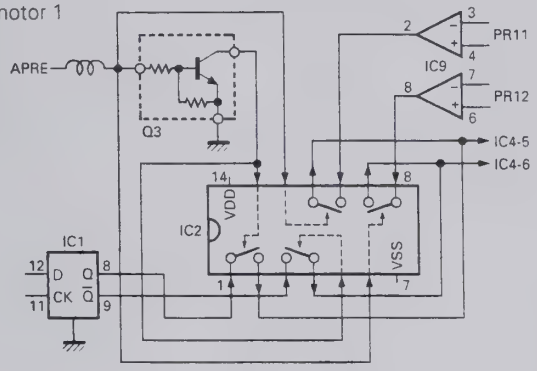
IC3	Analog switch	For control changeover motor 2 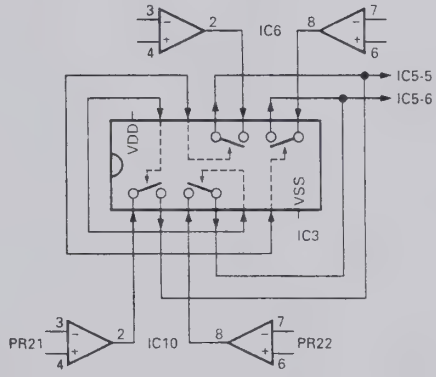
IC4	Motor drive	For motor 1 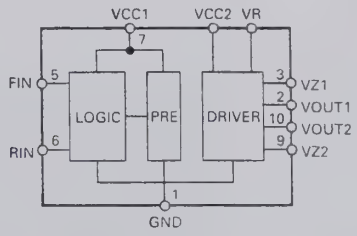
IC5	Motor drive	For motor 2
IC6	Comparator	Amplification difference detection
IC7	AVR	+5V
D1	Detector	Current component amplification detection
D2	Detector	Voltage component amplification detection
D3~8	Switching	Clipper
D10	Switching	Spike absorption
D101~103	Switching	Spike absorption
D105~108	Switching	Spike absorption
D109, 110	Switching	Band data

DESCRIPTION OF COMPONENTS

CONTROL UNIT (X53-356X-XX) (A/4) : CONTROL

0-11 : K,P 0-21 : M 0-22 : M2 0-71 : X 2-71 : E 2-72 : E2 2-73 : E3 2-74 : E9

Ref. No.	Use/Function	Operation/Condition
Q1, 2	Switching	Voltage drop changeover
Q3, 4	Switching	Multiplexer changeover
Q5	Switching	EEPROM write control changeover
Q6~11	Switching	AT control (PR11, PR12, PR21, PR22, APRE, SPED)
Q12, 13	Switching	AT-300 control and input (TS, TT)
Q14, 15	Switching	AT-300 control and output (TS, TT)
Q16	Switching	IC24 control (Reset)
Q17~19, 22	Switching	IC24 control (CH1, 2, 3, 4)
Q20, 24	Switching	IC24 control (DOT)
Q21, 23	Switching	IC24 control (DASH)
Q27	Switching	VBSY signal
Q28	Switching	KEY signal
Q29	Switching	Filter changeover (6kHz)
Q30	Switching	Filter changeover (3kHz)
Q31	Switching	Filter changeover (15kHz)
Q33	Switching	BLNK signal
IC1, 2	Regulator	5V output
IC3	Regulator	8V output
IC4	EEPROM	Adjustment data saving
IC5	Reset, Power supply changeover	System reset and Back-up power supply changeover
IC6	CPU	8 bit microcomputer (Main)
IC7, 10	Inverter	Reverse data
IC8	RAM	8K-byte
IC9, 13	Multiplexer	A/D data changeover
IC11	OR gate	RD/WR signal output
IC12	ROM	64K-byte
IC14	AND gate	Chip select combination for RAM and ROM
IC15	Bidirectional buffer	Data bus input/output changeover
IC16, 22, 23	Extended I/O	8 bit x 4, 4 bit x 1
IC17, 18	Decoder	Converts the address signal into a chip select signal for each IC.
IC19	Latch	Chip select signal latch
IC20, 21	Encoder gate array	Encoder pulse count
IC24	CPU	8 bit microcomputer (Electronic keyer)
IC25, 26	Schmitt trigger	Encoder chattering absorption
IC27	Level shift	RS-232 level shift
IC28	OP amplifier	Buffer
IC29	OR gate	CKY signal and BPC signal combination
D1~3	Protection diode	Power supply
D4	Voltage detector	Voltage drop detection (About 10V)
D5	Protection diode	Reverse current prevention
D6	Protection diode	KEYS line
D7	Protection diode	DASH line
D8	Protection diode	DOT line
D9	Protection diode	MD line
D10	Protection diode	MU line
D11	Protection diode	KEY line
D12	Protection diode	SS line

DESCRIPTION OF COMPONENTS

CONTROL UNIT (X53-356X-XX) (B/4) : SW

Ref. No.	Use/Function	Operation/Condition
Q501, 502	LED switch	
IC501~504	Serial/Parallel	Data conversion for tact switch and LED
D501, 502	LED	
D510~519	LED	

TX-RX UNIT (X57-4620-00)

Ref. No.	Use/Function	Operation/Condition
Q1	Switch	Change SS line to low when VOX active.
Q2	Amplifier	64.22MHz
Q3	Amplifier	REF 20MHz
Q4	Switch	On/Off when squelch open/close (For packet).
Q5, 7	Active LPF	
Q6	Active LPF	PLL loop filter
Q8	VCO	46.32MHz oscillation circuit
Q9, 10	VCO	Output buffer
Q12	Amplifier	LO4 466kHz
Q13, 15	Buffer	TX IF 455kHz
Q14	Amplifier	TX IF 455kHz
Q16	Buffer	Receive signal for DSP processing (11.3kHz)
Q17	Buffer	ACC2 audio output
Q22	Switch	Mute signal (Power on/off)
Q23	Buffer	RX IF 455kHz
Q25	Pulse generator	AF mute
Q26	Switch	Mute signal
Q27	Switch	Mute signal absorption (Mute inhibit when TX)
IC1	DSP A	Main DSP
IC2	DSP B	Sub DSP
IC3	Gate array	For interface
IC4	DSP ROM	Low (D0~D7) 32KB
IC5	DSP ROM	Mid (D8~D15) 32KB
IC6	DSP ROM	High (D16~D23) 32KB
IC7	DSP RAM	8K ward
IC9	PLD	Timing generator
IC15	PLL IC	46.32MHz clock generation
IC16	DAC	Rch : BEEP signal (About 1kHz) Lch : Transmission signal (11.3kHz)
IC17	Active filter	TX (fc = 49.1kHz) 3rd LPF
IC18	Mixer	RX : 455kHz → 11.3kHz TX : 11.3kHz → 455kHz
IC19	Voltage follower, Active LPF	Reference voltage buffer, BEEP LPF (fc = 1.9kHz)
IC20	Voltage follower	Reference voltage buffer
IC21	LPF, Buffer	RX IF 11.3kHz
IC22	Amplifier	Microphone amplifier, unbalanced/balanced modulation
IC23	Multiplexer	MIC, DATA, DRU-3 changeover
IC24	LPF, Buffer	TX microphone amplifier, unbalanced/balanced modulation
IC25	ADC	Rch : Reception signal Lch : Microphone input signal
IC26	DAC	VCA control
IC27	DAC	Rch : Monitor signal Lch : De-modulation signal
IC28	Active LPF	De-modulation signal (fc = 10.6kHz)
IC29	VCA (Electronic volume)	De-modulation signal, BEEP
IC30	Active LPF	Monitor signal (fc = 5.3kHz)
IC31	VCA (Electronic volume)	Packet AF, monitor
IC33	AF amplifier	Audio amplifier

DESCRIPTION OF COMPONENTS

Ref. No.	Use/Function	Operation/Condition
IC34	DAC	Rch : AGC signal Lch : FM modulation signal
IC35	I-V converter, Inverter	AGC and S-meter voltage
IC36	I-V converter, Active LPF	FM modulation signal (fc = 7.2kHz)
IC37	AVR	13.8V → Analog 5V
IC38	AVR	Digital 8V → Digital 5V
IC39	AVR	13.8V → 5V for PLL
IC40	AVR	13.8V → 8V for PLL
IC41, 42	Buffer	VCA control
IC43	Clipper amplifier	RX IF 455kHz
IC44	Inverter	Mute (Power on/off)
D1~4	Reverse current prevention	
D5	VCO bari-cap diode for DSP	64.32MHz oscillation
D7, 8	Reverse current prevention	

SEMICONDUCTOR DATA

PLL : MB86001PF (RF Unit IC507, 509, TX-RX Unit IC15)

■ Terminal connection diagram

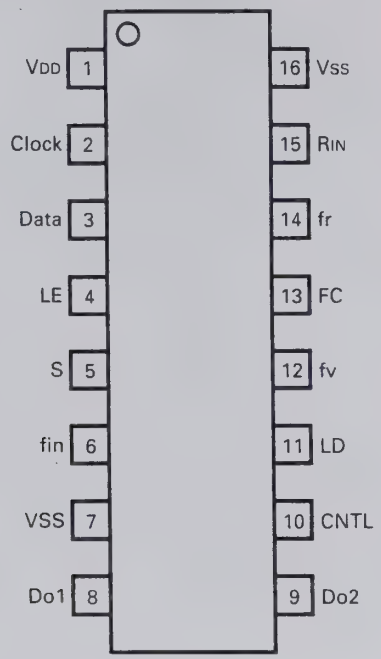

■ Terminal functions

Pin No.	Pin code	I/O	Function
1	VDD	–	Power supply pin.
2	Clock	I	Shift register clock input pin. Serial data is taken in at the rising edge of the clock signal. The input section contains a Schmitt trigger circuit.
3	Data	I	Serial data input pin for setting the divide ratio of each divider. The input section contains a Schmitt trigger circuit.
4	LE	I	Shift register load enable signal input pin. When LE is high, the divider ratio data is transferred to the latch specified by the control bit. This data is used as the divide ratio of each divider. The input section contains a Schmitt trigger circuit.
5	S	I	Switch pin for selecting the latch for setting the divide ratio of each divider. When the S pin is low, latch V1 is selected. When the S pin is high, latch V2 is selected. The divide ratio data is then sent to the divider.
6	fin	I	Divider input pin. The input section contains a bias circuit and an amplifier. Connect the voltage control oscillator (such as a VCO) by AC-coupling.
7	Vss	–	Ground pin.
8	Do1	O	Phase comparator output pin (charge pump). The Do1 output level can be reversed by FC. The reference divider output fr and divider output fv are related as follows. On when CNTL is low. fr > fv : High level (FC : Low), Low level (FC : High), fr = fv : High impedance, fr < fv : Low level (FC : Low), High level (FC : High)
9	Do2	O	Phase comparator output pin (charge pump). The relationships between the reference divider output fr and divider output fv are the same as for Do1. On when CNTL is high.
10	CNTL	I	Pin that controls charge pump outputs Do1 and Do2. The relationships between CNTL, Do1 and Do2 are as follows When CNTL is low, Do1 : Output, Do2 : High impedance. When CNTL is high, Do1 : High impedance, Do2 : Output.
11	LD	O	Phase comparator output pin. When PLL is locked, LD is high. When PLL is unlocked, LD is low.
12	fv	O	Divider division output monitor pin. A signal is output from the pin in monitor mode. Normally, this pin has high impedance.
13	FC	I	Phase comparator input switch pin.
14	fr	O	Reference divider division output monitor pin. A signal is output from this pin in monitor mode. Normally, this pin has high impedance.
15	RIN	I	Reference divider input pin. The input section contains a bias circuit and an amplifier. Connect the reference oscillator (such as TCXO) by AC-coupling.
16	Vss	–	Ground pin.

SEMICONDUCTOR DATA

Bidirectional buffer : TC74VHC245F (COntrol Unit IC15)

■ Terminal connection diagram

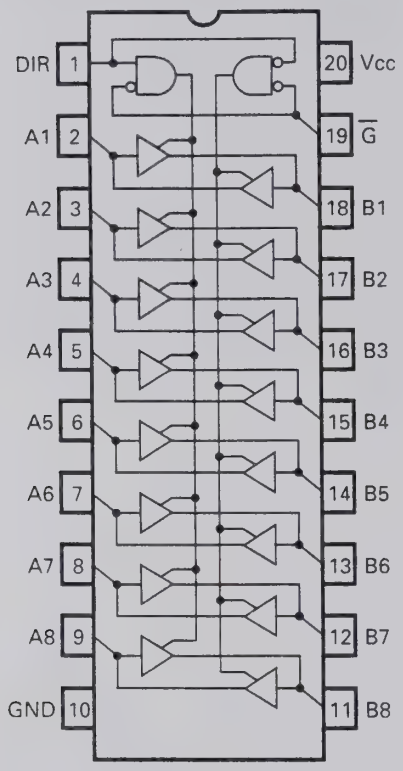

■ Logic diagram

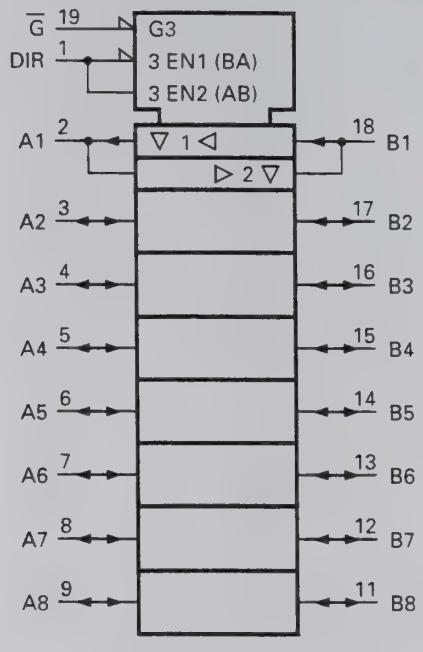

■ Truth table

Input		Function		Output
$\overline{G}$	DIR	A bus	B bus	state
L	L	Output	Input	A=B
L	H	Input	Output	B=A
H	X	High impedance		Z

X : Don't Care Z : High impedance

SEMICONDUCTOR DATA

DC/AC Converter : AK4318-VS (TX-RX Unit IC16, 27)

■ Terminal connection diagram

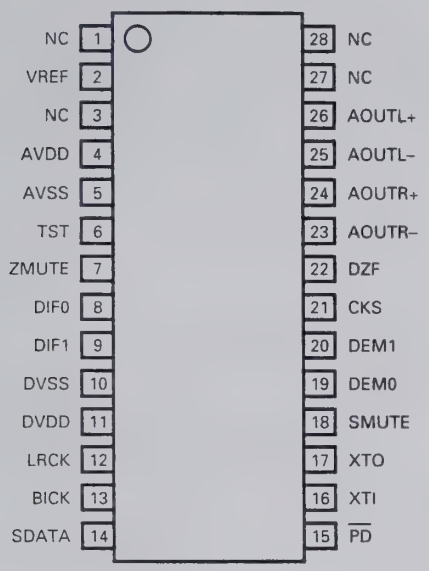

■ Block diagram

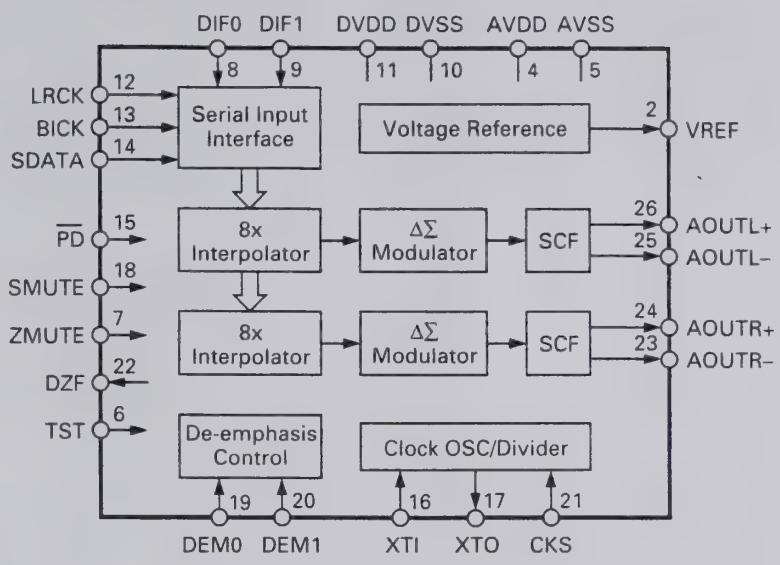

■ Terminal functions

Pin No.	Pin name	I/O	Function
1	NC	–	
2	VREF	O	Reference voltage output pin (AVDD) – 3.75V. The 10µF electrolytic capacitor and 0.1µF ceramic capacitor are connected between VREF and AVDD.
3	NC	–	
4	AVDD	–	Analog power supply pin (+5V).
5	AVSS	–	Analog ground pin.
6	TST	I	Test pin (pull down). Must be open or low.
7	ZMUTE	I	Zero mute pin (pull down). High : Detects zero and mutes output.
8, 9	DIF0, DIF1	I	Input format pin. Supports four modes.
10	DVSS	–	Digital ground pin.
11	DVDD	–	Digital power supply pin (+5V).
12	LRCK	I	L/R clock pin. Determines the input serial data channel.
13	BICK	I	Serial bit clock pin. The clock latches serial data.
14	SDATA	I	Serial data input pin. Number two's complement MSB first.
15	$\overline{PD}$	I	Reset pin. When this pin goes low, the filter and modulator are reset. Make this pin low to reset the filter and modulator when the power is turned on.
16	XTI	I	Clock input pin. Connect a crystal oscillator between XTI and XTO or input the external CMOS clock to XTI. The clock frequency can be selected with the CKS pin.
17	XTO	O	Crystal oscillator output pin. If the crystal oscillator is used, connect it between the XTO and XTI pins. If the external clock is used, open this pin.
18	SMUTE	I	Soft mute pin (pull down). High : Soft mute, Low : Cancel
19, 20	DEM0, DEM1	I	De-emphasis mode pin. Supports three frequencies.
21	CKS	I	Clock select pin. Low : CLK 256 fd, High : CLK 384 fs
22	DZF	O	Zero input detection pin. High when the data input to the SDATA pin for both channels becomes zero 8192 times consecutively.
23	AOUTR–	O	Right-channel analog negative output pin.
24	AOUTR+	O	Right-channel analog positive output pin.
25	AOUTL–	O	Left-channel analog negative output pin.
26	AOUTL+	O	Left-channel analog positive output pin.
27, 28	NC	–	

SEMICONDUCTOR DATA

AC/DC Converter : AK5340-VS (TX-RX Unit IC25)

■ Terminal connection diagram

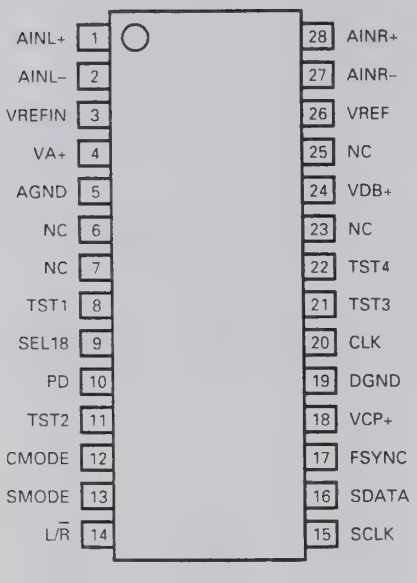

■ Block diagram

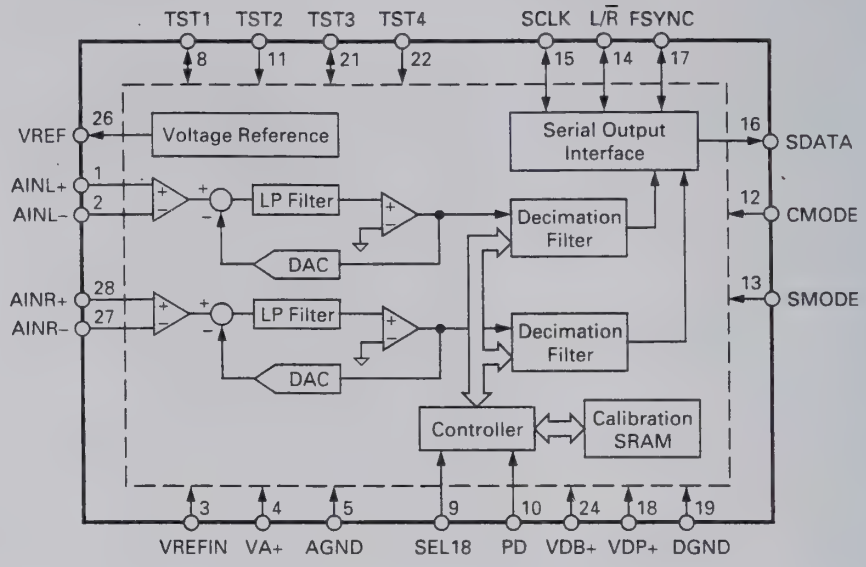

■ Terminal functions

Pin No.	Pin name	I/O	Function
1	AINL+	I	Left-channel analog non-inverted input pin.
2	AINL–	I	Left-channel analog inverted input pin.
3	VREFIN	I	Reference voltage input pin. Normally connect to the VREF pin. The input range is 1.6 times the difference between VA+ and the voltage input to this pin.
4	VA+	–	Analog section analog power supply pin (+5V).
5	AGND	–	Analog section analog ground pin.
6, 7	NC	–	
8	TST1	–	Test pin. Open or connect to DGND.
9	SEL18	I	Output data length select pin (with pull down resistor). Low : 16 bits, High : 18 bits
10	PD	I	Power down pin. High : Power down mode. Offset calibration starts at a falling edge. When the power is turned on or the clock frequency is changed, calibration must be carried out.
11	TST2	–	Test pin. Open or connect to DGND.
12	CMODE	I	Master clock select pin. Low : CLK 256 fs (12.288MHz @fs : 48kHz), High : CLK 384 fs (18.432MHz @fs : 48kHz)
13	SMODE	I	Interface clock select pin. Set the input/output of each of the L/R̄, SCLK, and FSYNC clock pins. Low : Save mode (all input pins), High : Master mode (all output pins)
14	L/R̄	I/O	Input channel select pin. Slave mode : The fs clock is input. Lch MSB data is output at a rising edge and Rch MSB data is output at a falling edge of the clock signal. Master mode : The fs clock is output. SDATA is output one clock after the L/R̄ edge. High when the power is down (PD : High).
15	SCLK	I/O	Serial data clock pin. One bit of data is output at a falling edge of the clock. Slave mode : Normally a 32 to 64 fs clock is input. Master mode : A 64 fs clock is output. Low when the power is down (PD : High).
16	SDATA	O	Serial data output pin. Data is number two's complement and the MSB is output first. Goes low after 16/18 bits are output. Low when the power is down (PD : High).
17	FSYNC	I/O	Frame synchronization clock pin. Slave mode : SDATA output is enabled when the pin is high. Master mode : The 2 fs clock is output. High when 16-bit data is output. The two low-order bits are low when 18-bit output is selected. Low when the power is down (PD : High).
18	VDP+	–	Digital section power supply pin (+5V).
19	DGND	–	Digital section ground pin.
20	CLK	I	Master clock input pin. When CMODE is high, CLK : 384 fs. When CMODE is low, CLK : 256 fs.
21, 22	TST3, TST4	–	Test pin. Open or connect to DGND.

SEMICONDUCTOR DATA

Pin No.	Pin name	I/O	Function
23	NC	–	
24	VDB+	–	Digital section power supply pin (+5V). (Silicon PCB potential)
25	NC	–	
26	VREF	O	Reference voltage output pin (VA+) – 2.6V. Output based on VA+. Normally connect this output to the VREFIN pin
27	AINR–	I	Right-channel analog inverted output pin.
28	AINR+	I	Right-channel analog non-inverted output pin.

DC/AC Converter : PCM69AU (TX-RX Unit IC34)

■ Terminal connection diagram

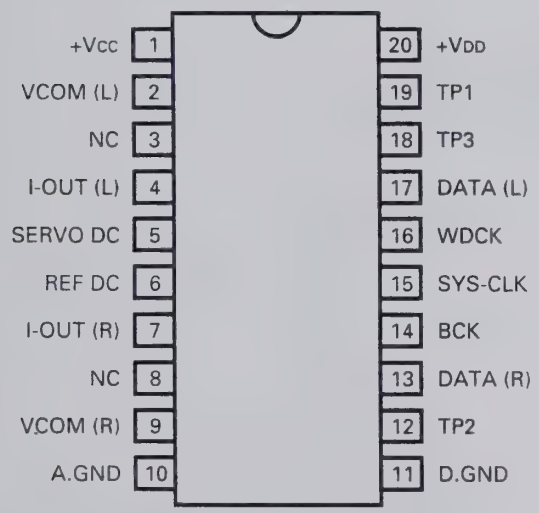

■ Terminal functions

Pin No.	Pin name	Function
1	+VCC	Analog Positive power supply
2	VCOM (L)	Lch V common
3	NC	
4	I-OUT (L)	Lch current output
5	SERVO DC	Servo filter
6	REF DC	Reference filter
7	I-OUT (R)	Rch current output
8	NC	
9	VCOM (R)	Rch V common
10	A. GND	Analog common
11	D. GND	digital common
12	TP2	Test pin 2
13	DATA (R)	Rch data input
14	BCK	Bit clock input
15	SYS-CLK	System clock input
16	WDCK	Word clock input
17	DATA (L)	Lch data input
18	TP3	Test pin 3
19	TP1	Test pin 1
20	+VDD	Digital positive power supply

PARTS LIST

CAPACITORS

CC 45 TH 1H 220 J
1 2 3 4 5 6

1 = Type ... ceramic, electrolytic, etc.
2 = Shape ... round, square, ect.
3 = Temp. coefficient
4 = Voltage rating
5 = Value
6 = Tolerance

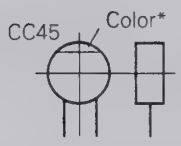

• Capacitor value

010 = 1pF
100 = 10pF
101 = 100pF
102 = 1000pF = 0.001µF
103 = 0.01µF

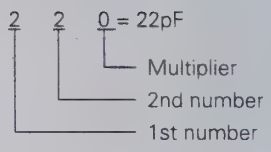

• Temperature coefficient

1st Word	C	L	P	R	S	T	U
Color*	Black	Red	Orange	Yellow	Green	Blue	Violet
ppm/°C	0	–80	–150	–220	–330	–470	–750

2nd Word	G	H	J	K	L
ppm/°C	±30	±60	±120	±250	±500

Example : CC45TH = –470 ± 60ppm/°C

• Tolerance

Code	C	D	G	J	K	M	X	Z	P	No code
(%)	±0.25	±0.5	±2	±5	±10	±20	+40 –20	+80 –20	+100 –0	More than 10µF – 10 ~ +50 Less than 4.7µF –10 ~ +75

Less than 10pF

Code	B	C	D	F	G
(pF)	±0.1	±0.25	±0.5	±1	±2

• Voltage rating

1st word \ 2nd word	A	B	C	D	E	F	G	H	J	K	V
0	1.0	1.25	1.6	2.0	2.5	3.15	4.0	5.0	6.3	8.0	–
1	10	12.5	16	20	25	31.5	40	50	63	80	35
2	100	125	160	200	250	315	400	500	630	800	–
3	1000	1250	1600	2000	2500	3150	4000	5000	6300	8000	–

• Chip capacitors (Refer to the table above except dimension)

(EX) CC 73 F SL 1H 000 J
1 2 3 4 5 6 7
(Chip) (CH, RH, UJ, SL)

(EX) CK 73 F F 1H 000 Z
1 2 3 4 5 6 7
(Chip) (B, F)

RESISTORS

• Chip resistor (Carbon)

(EX) RD 73 E B 2B 000 J
1 2 3 4 5 6 7
(Chip) (B,F)

• Carbon resistor (Normal type)

(EX) RD 14 B B 2C 000 J
1 2 3 4 5 6 7

1 = Type ... ceramic, electrolytic, etc.
2 = Shape ... round, square, ect.
3 = Dimension
4 = Temp. coefficient
5 = Voltage rating
6 = Value
7 = Tolerance

Dimension

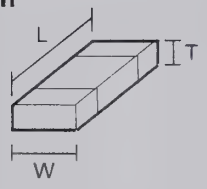

• Dimension (Chip capacitor)

Dimension code	L	W	T
Empty	5.6 ± 0.5	5.0 ± 0.5	Less than 2.0
E	3.2 ± 0.2	1.6 ± 0.2	Less than 1.25
F	2.0 ± 0.3	1.25 ± 0.2	Less than 1.25

• Dimension (Chip resistor)

Dimension code	L	W	T	Wattage
E	3.2 ± 0.2	1.6 ± 0.2	0.57	2B
F	2.0 ± 0.3	1.25 ± 0.2	0.45	2A

Rating wattage

Code	Wattage	Code	Wattage	Code	Wattage
2A	1/10W	2E	1/4W	3A	1W
2B	1/8W	2H	1/2W	3D	2W
2C	1/6W				

PARTS LIST

* New Parts. ⚠ indicates safety critical components.
Parts without **Parts No.** are not supplied.
Les articles non mentionnes dans le **Parts No.** ne sont pas fournis.
Teile ohne **Parts No.** werden nicht geliefert.

L : Scandinavia **K** : USA **P** : Canada
Y : PX (Far East, Hawaii) **T** : England **E** : Europe
Y : AAFES (Europe) **X** : Australia **M** : Other Areas

TS-870S

Ref. No.	Address	New parts	Parts No.	Description	Destination
			TS-870S		
1	1B	*	A01-2097-01	METALLIC CABINET (UPPER)	
2	3B	*	A01-2098-01	METALLIC CABINET (LOWER)	
33	3A,2D	*	A62-0382-02	PANEL ASSY	
3	2C	*	A62-0384-02	PANEL	
4	2D	*	B10-1227-03	FRONT GLASS	
5	2D	*	B11-1123-04	REFLECTOR	
6	1E	*	B38-0736-05	DISPLAY ASSY	
7	2B		B42-3343-04	S/NO LABBL	
8	3N		B42-5526-04	STICKER	K
9	2C		B43-1045-04	BADGE (KENWOOD)	
10	2C	*	B43-1101-04	BADGE (DSP)	
11	3N		B44-2163-04	UPC CORD LABEL	
12	1O		B46-0310-03	WARRNTY CARD	EE2E3E9
12	1O		B46-0410-40	WARRNTY CARD	K
12	1O		B46-0422-00	WARRNTY CARD	P
13	1O	*	B62-0542-00	INSTRUCTION MANUAL (ENGLISH)	
14	1O	*	B62-0543-00	INSTRUCTION MANUAL (SPANISH)	MM2E2E3
15	1O	*	B62-0544-00	INSTRUCTION MANUAL (NETHERLAND)	MM2E2E3
16	1O	*	B62-0545-00	INSTRUCTION MANUAL (FRENCH)	PMM2
16	1O	*	B62-0545-00	INSTRUCTION MANUAL (FRENCH)	E2E3E9
17	1O	*	B62-0546-00	INSTRUCTION MANUAL (GERMAN)	E
18	1O	*	B62-0547-00	INSTRUCTION MANUAL (ITALIAN)	E
19	2B	*	B72-0911-04	MODEL NAME PLATE	KMM2XP
19	2B	*	B72-0912-04	MODEL NAME PLATE	EE2E3E9
20	1H		E04-0167-05	RF COAXIAL CABLE RECEPTACLE (M)	
21	1N		E07-0751-05	DIN PLUG (7P) ACSY	
22	1N		E07-1351-05	DIN PLUG (13P) ACSY	
23	1H		E23-0992-04	EARTH LUG (ANT)	
24	1N	*	E30-3157-15	DC CORD ACSY	
W51	2K,3K		E31-3433-05	LEAD WIRE WITH MINIPIN PLUG	
W52	3I,4K		E37-0062-05	LEAD WIRE WITH MINIPIN PLUG	
W53	2I,4K	*	E37-0518-05	LEAD WIRE WITH MINIPIN PLUG	
W54	1I,2I	*	E37-0519-05	LEAD WIRE WITH MINIPIN PLUG	
W56	1J,2K	*	E37-0521-05	LEAD WIRE WITH MINIPIN PLUG	
W57	1I,4K	*	E37-0522-05	LEAD WIRE WITH MINIPIN PLUG	
W58	1I	*	E37-0523-05	FLAT CABLE	
W59	2I,1J	*	E37-0524-05	FLAT CABLE	
W60	2A	*	E37-0526-05	FLAT CABLE	
W61	2A	*	E37-0527-05	FLAT CABLE	
W62	3I	*	E37-0528-05	FLAT CABLE	
W63-1	4J	*	E37-0529-05	FLAT CABLE	
W63-2	3I,4I	*	E37-0529-05	FLAT CABLE	
W64	4J	*	E37-0530-05	FLAT CABLE	
W65	3I	*	E37-0531-05	FLAT CABLE	
W66	3I,4I	*	E37-0532-05	FLAT CABLE	
W67	2A	*	E37-0533-05	FLAT CABLE	
W68	2A	*	E37-0534-05	FLAT CABLE	
W69	2I,4I	*	E37-0535-05	LEAD WIRE WITH MINIPIN PLUG	
W70	2A	*	E37-0537-05	LEAD WIRE WITH CONNECTOR	
W71	1I,1J	*	E37-0538-05	LEAD WIRE WITH CONNECTOR	
W72	1I,4K	*	E37-0540-05	LEAD WIRE WITH CONNECTOR	
W73	1I,1J	*	E37-0541-15	LEAD WIRE WITH CONNECTOR	
W74	1K	*	E37-0542-05	LEAD WIRE WITH CONNECTOR	
W75	2J	*	E37-0543-05	LEAD WIRE WITH CONNECTOR	
W76	2A	*	E37-0547-15	LEAD WIRE WITH CONNECTOR (SP)	
W77	2J	*	E37-0548-05	LEAD WIRE WITH CONNECTOR	
W78	2I,4I	*	E37-0549-05	LEAD WIRE WITH CONNECTOR	
W79	2A	*	E37-0550-15	LEAD WIRE WITH CONNECTOR	
W80	2I,4J	*	E37-0551-05	LEAD WIRE WITH CONNECTOR	
W81	1I,4I	*	E37-0552-05	LEAD WIRE WITH CONNECTOR	
W82	2K,3K	*	E37-0569-05	LEAD WIRE WITH MINIPIN PLUG	
W83	–	*	E37-0570-05	LEAD WIRE WITH CONNECTOR (VS-2)	
26	1N		F05-2531-05	FUSE (25A/32V) ACSY	
27	1N		F06-4029-05	FUSE (4A/250V) ACSY	
28	2G	*	F09-0449-05	FAN MOTOR	
29	3G		F10-1206-04	SHIELDING COVER (EARTH SPRING)	
30	2B,1G		F10-1468-13	SHIELDING COVER (FINAL)	
31	1G		G02-0574-04	FLAT SPRING (AVR)	
32	2G	*	G02-0767-04	FLAT SPRING (THERMMISTOR)	
34	1A		G10-0697-04	FIBROUS SHEET (SP)	
35	1D		G10-0702-04	FIBROUS SHEET (SUB 2)	
36	1A		G10-0703-04	FIBROUS SHEET (CASE)	
39	1B		G13-0934-04	CUSHION (UPPER CASE)	
40	2G		G13-1310-04	CUSHION (FAN)	
41	4F	*	G13-1327-04	CUSHION (DRU-3)	
42	2D	*	G13-1480-04	CUSHION (KNOB)	
43	2D	*	G13-1481-04	CUSHION (KNOB)	
44	2D	*	G13-1482-04	CUSHION (KNOB)	
45	2D	*	G13-1483-04	CUSHION (KNOB)	
46	1A	*	G13-1498-04	CUSHION (SP)	
47	3B	*	G13-1511-04	CUSHION (LOWER CASE)	
50	2N	*	H10-2791-01	POLYSTYRENE FOAMED FIXTURE (F)	
51	2O	*	H10-2792-11	POLYSTYRENE FOAMED FIXTURE (R)	
52	1N	*	H13-0963-04	CARTON BOARD	
53	2O		H20-1437-03	PROTECTION COVER	
54	1N		H25-0029-04	BAG (FUSE)	
55	1N		H25-0079-04	BAG (MIC)	
56	1N		H25-0708-04	BAG (DC CORD)	
57	2O	*	H52-0730-02	ITEM CARTON CASE	
58	3O	*	H62-0641-03	OUTER PACKING CASE	
59	3B		J02-0049-14	FOOT (REAR)	
60	1A,3A		J02-0441-05	FOOT (SIDE)	
61	3A	*	J02-0474-05	FOOT (FRONT)	
62	2G		J21-4326-03	HARDWARE FIXTURE (FAN)	
63	1D	*	J21-4496-05	HARDWARE FIXTURE (PHONE JACK)	
64	2D		J31-0141-04	COLLAR (MIC)	
65	2H	*	J32-0923-04	HEXAGON BOSS	
–			J61-0307-05	BAND	
70	1B		K01-0416-05	HANDLE ASSY	
71	2C	*	K21-1102-04	KNOB (MAIN : WITH SCREW)	
72	2C	*	K29-4966-04	KNOB RING (MAIN)	
73	2D	*	K29-4967-03	KNOB (FILTER)	
74	2C	*	K29-4968-03	KNOB (M.CH,RIT : WITH SPRING)	
75	2C	*	K29-4969-03	KNOB (INSIDE)	
76	2C	*	K29-4970-03	KNOB (OUTSIDE)	
77	1C	*	K29-4978-03	KNOB (POWER)	
78	1D	*	K29-4979-03	KNOB (UP/DOWN)	

PARTS LSIT

TS-870S
RF UNIT (X44-3210-00)

Ref. No.	Address	New parts	Parts No.	Description	Destination
79	1C	*	K29-4980-03	KNOB (ANT, etc.)	
80	1D	*	K29-4981-03	KNOB (LED)	
81	1C,1D	*	K29-4982-03	KNOB (AT TUNE, etc.)	
82	1D	*	K29-4983-03	KNOB (LED)	
83	1C	*	K29-4984-03	KNOB (QUICK MEMO)	
84	1C	*	K29-4985-03	KNOB (LSB/USB)	
85	1C	*	K29-4986-03	KNOB (CW/-R)	
86	1C	*	K29-4987-03	KNOB (FSK/-R)	
87	1C	*	K29-4988-03	KNOB (FM/AM)	
88	1D	*	K29-4989-03	KNOB (AUTO NOTCH)	
89	1D	*	K29-4990-03	KNOB (BEAT CANCEL)	
90	1D	*	K29-4991-03	KNOB (N.R)	
91	1D	*	K29-4992-03	KNOB (TX EQ.)	
A	1H		N09-0372-04	SCREW (DC)	
B	1H		N09-0682-04	SCREW (GND)	
C	3F		N09-2051-05	SCREW	X
D	1H		N11-0040-46	FLANGE NUT (GND)	
E	1H		N14-0509-05	NUT (GND)	
F	1H		N15-1040-46	FLAT WASHER (GND)	
G	1D,1E		N32-2606-46	FLAT HEAD SCREW	
H	2A,3A		N32-3006-46	FLAT HEAD SCREW (SUB PANEL)	
I	1B,3B		N33-3006-41	OVAL HEAD SCREW (CASE)	
J	2A,2F		N87-2606-46	BRAZIER HEAD SCREW (UNIT,RL)	
K	1A,1H		N87-3006-46	BRAZIER HEAD SCREW (AT,FAN)	
L	2G,2H		N87-3008-46	BRAZIER HEAD SCREW	
M	2B,1G		N88-2608-46	FLAT HEAD SCREW (FINAL)	
N	2D		N90-3008-46	TP HEAD MACHIN SCREW (PANEL)	
P	3A,3B		N91-3010-46	TP HEAD TAPPING SCREW (FOOT)	
SP	1A		T07-0252-15	LOUDSPEAKER (8 ohm 1W)	
MIC	1N		T91-0352-15	MICROPHONE ACSY	
93	1E		W02-1836-05	ENCODER	
BATT	2A	*	W09-0873-05	LITHIUM CELL (3V 220MAh)	

RF UNIT (X44-3210-00)

C1			CK73FB1H103K	CHIP C	0.010UF	K
C2			CC73FCH1H121J	CHIP C	120PF	J
C3			CK73FF1C105Z	CHIP C	1.0UF	Z
C4,5			CK73FB1H103K	CHIP C	0.010UF	K
C6			CK73FB1E103K	CHIP C	0.010UF	K
C7			CK73FB1H103K	CHIP C	0.010UF	K
C8			CK73FB1H102K	CHIP C	1000PF	K
C10			CK73FB1H103K	CHIP C	0.010UF	K
C14			CK73FB1E103K	CHIP C	0.010UF	K
C15			CK73FF1C105Z	CHIP C	1.0UF	Z
C16			CK73FF1E104Z	CHIP C	0.10UF	Z
C17			CK73FF1C105Z	CHIP C	1.0UF	Z
C18			CK73FB1E103K	CHIP C	0.010UF	K
C19			CK73FB1H182K	CHIP C	1800PF	K
C21			CK73FB1H682K	CHIP C	6800PF	K
C22			CK73FB1H182K	CHIP C	1800PF	K
C23			CK73FF1E104Z	CHIP C	0.10UF	Z
C27			CK73FF1E104Z	CHIP C	0.10UF	Z
C28			CE04EW1C100M	ELECTRO	10UF	16WV
C29-31			CK73FF1E104Z	CHIP C	0.10UF	Z
C32			CE04EW1C100M	ELECTRO	10UF	16WV
C33			CK73FF1C105Z	CHIP C	1.0UF	Z

Ref. No.	Address	New parts	Parts No.	Description			Destination
C34			CK73FF1E104Z	CHIP C	0.10UF	Z	
C35			CC73FCH1H050C	CHIP C	5.0PF	C	
C36			CK73FB1H103K	CHIP C	0.010UF	K	
C39,40			CK73FB1E103K	CHIP C	0.010UF	K	
C47			CK73FB1H103K	CHIP C	0.010UF	K	
C48			CK73FB1H223K	CHIP C	0.022UF	K	
C49			CK73FB1H103K	CHIP C	0.010UF	K	
C50			CK73FF1E104Z	CHIP C	0.10UF	Z	
C51			CK73FF1C105Z	CHIP C	1.0UF	Z	
C52			CK73FB1H222K	CHIP C	2200PF	K	
C53			CK73FB1H682K	CHIP C	6800PF	K	
C54			CK73FB1H222K	CHIP C	2200PF	K	
C55			CK73FF1E104Z	CHIP C	0.10UF	Z	
C56			CK73FF1C105Z	CHIP C	1.0UF	Z	
C57			CK73FB1H472K	CHIP C	4700PF	K	
C58			CK73FF1E104Z	CHIP C	0.10UF	Z	
C59			CK73FF1C105Z	CHIP C	1.0UF	Z	
C60			CC73FSL1H821J	CHIP C	820PF	J	
C61			CK73FF1C105Z	CHIP C	1.0UF	Z	
C62			CK73FB1H472K	CHIP C	4700PF	K	
C63			CK73FF1E104Z	CHIP C	0.10UF	Z	
C64			CK73FB1H222K	CHIP C	2200PF	K	
C65			CK73FF1E104Z	CHIP C	0.10UF	Z	
C66			CK73FF1C105Z	CHIP C	1.0UF	Z	
C67			CK73FB1H561K	CHIP C	560PF	K	
C68			CK73FF1C105Z	CHIP C	1.0UF	Z	
C69			CK73FB1H222K	CHIP C	2200PF	K	
C70			CK73FF1E104Z	CHIP C	0.10UF	Z	
C71			CK73FB1H102K	CHIP C	1000PF	K	
C72			CK73FF1E104Z	CHIP C	0.10UF	Z	
C73			CK73FF1C105Z	CHIP C	1.0UF	Z	
C74			CC73FSL1H271J	CHIP C	270PF	J	
C75			CK73FF1C105Z	CHIP C	1.0UF	Z	
C76			CK73FB1H102K	CHIP C	1000PF	K	
C77,78			CK73FF1E104Z	CHIP C	0.10UF	Z	
C80			CK73FF1C105Z	CHIP C	1.0UF	Z	
C81			CC73FCH1H050C	CHIP C	5.0PF	C	
C83			CC73FCH1H050C	CHIP C	5.0PF	C	
C85			CC73FCH1H050C	CHIP C	5.0PF	C	
C87			CK73FF1C105Z	CHIP C	1.0UF	Z	
C88			CK73FF1E104Z	CHIP C	0.10UF	Z	
C89			CK73FB1H102K	CHIP C	1000PF	K	
C90			CK73FF1E104Z	CHIP C	0.10UF	Z	
C91			CK73FF1C105Z	CHIP C	1.0UF	Z	
C92			CC73FCH1H121J	CHIP C	120PF	J	
C93			CK73FF1C105Z	CHIP C	1.0UF	Z	
C94			CK73FB1H102K	CHIP C	1000PF	K	
C95			CK73FF1E104Z	CHIP C	0.10UF	Z	
C96			CK73FB1H102K	CHIP C	1000PF	K	
C97			CK73FF1E104Z	CHIP C	0.10UF	Z	
C98			CK73FF1C105Z	CHIP C	1.0UF	Z	
C99			CC73FCH1H820J	CHIP C	82PF	J	
C100			CK73FF1C105Z	CHIP C	1.0UF	Z	
C101			CK73FB1H102K	CHIP C	1000PF	K	
C102,103			CK73FF1E104Z	CHIP C	0.10UF	Z	
C105			CK73FF1C105Z	CHIP C	1.0UF	Z	
C106			CC73FCH1H040C	CHIP C	4.0PF	C	
C108			CC73FCH1H040C	CHIP C	4.0PF	C	
C110			CK73FF1C105Z	CHIP C	1.0UF	Z	

PARTS LIST

RF UNIT (X44-3210-00)

Ref. No.	Address	New parts	Parts No.	Description			Destination
C111			CK73FF1E104Z	CHIP C	0.10UF	Z	
C112			CC73FSL1H391J	CHIP C	390PF	J	
C113			CK73FF1E104Z	CHIP C	0.10UF	Z	
C114			CK73FF1C105Z	CHIP C	1.0UF	Z	
C115			CC73FCH1H680J	CHIP C	68PF	J	
C116			CK73FF1C105Z	CHIP C	1.0UF	Z	
C117			CC73FSL1H151J	CHIP C	150PF	J	
C118,119			CK73FF1E104Z	CHIP C	0.10UF	Z	
C121			CK73FF1C105Z	CHIP C	1.0UF	Z	
C122			CC73FCH1H050C	CHIP C	5.0PF	C	
C124			CC73FCH1H050C	CHIP C	5.0PF	C	
C126			CK73FF1C105Z	CHIP C	1.0UF	Z	
C127			CK73FF1E104Z	CHIP C	0.10UF	Z	
C128			CC73FCH1H221J	CHIP C	220PF	J	
C129			CK73FF1E104Z	CHIP C	0.10UF	Z	
C130			CK73FF1C105Z	CHIP C	1.0UF	Z	
C131			CC73FCH1H330J	CHIP C	33PF	J	
C132			CK73FF1C105Z	CHIP C	1.0UF	Z	
C133			CK73FF1E104Z	CHIP C	0.10UF	Z	
C134			CK73FB1H103K	CHIP C	0.010UF	K	
C135			CC73FCH1H121J	CHIP C	120PF	J	
C136			CK73FF1E104Z	CHIP C	0.10UF	Z	
C137			CC73FSL1H221J	CHIP C	220PF	J	
C138			CK73FB1E103K	CHIP C	0.010UF	K	
C139			CK73FF1E104Z	CHIP C	0.10UF	Z	
C140,141			CK73FB1E103K	CHIP C	0.010UF	K	
C142			CK73FF1E104Z	CHIP C	0.10UF	Z	
C143			CC73FCH1H390J	CHIP C	39PF	J	
C144,145			CK73FB1E103K	CHIP C	0.010UF	K	
C146,147			CK73FF1E104Z	CHIP C	0.10UF	Z	
C148			CK73FB1E103K	CHIP C	0.010UF	K	
C149			CK73FF1E104Z	CHIP C	0.10UF	Z	
C150,151			CK73FF1C105Z	CHIP C	1.0UF	Z	
C152,153			CK73FF1E104Z	CHIP C	0.10UF	Z	
C154			CC73FCH1H101J	CHIP C	100PF	J	
C155			CC73FCH1H150J	CHIP C	15PF	J	
C156			CK73FB1E103K	CHIP C	0.010UF	K	
C157			CC73FSL1H221J	CHIP C	220PF	J	
C158			CK73FB1H471K	CHIP C	470PF	K	
C159			CK73FB1H102K	CHIP C	1000PF	K	
C160			CC73FCH1H470J	CHIP C	47PF	J	
C161			CC73FCH1H820J	CHIP C	82PF	J	
C162			CK73FF1E104Z	CHIP C	0.10UF	Z	
C163			CK73FB1E103K	CHIP C	0.010UF	K	
C164			CC73FSL1H471J	CHIP C	470PF	J	
C165			CK73FB1E103K	CHIP C	0.010UF	K	
C166,167			CK73FF1E104Z	CHIP C	0.10UF	Z	
C168			CK73FB1E103K	CHIP C	0.010UF	K	
C169			CC73FCH1H680J	CHIP C	68PF	J	
C170			CK73FF1E104Z	CHIP C	0.10UF	Z	
C171			CC73FCH1H470J	CHIP C	47PF	J	
C172,173			CK73FB1E103K	CHIP C	0.010UF	K	
C174			CC73FSL1H471J	CHIP C	470PF	J	
C175			CC73FCH1H470J	CHIP C	47PF	J	
C176			CE04EW1C470M	ELECTRO	47UF	16WV	
C177			CC73FCH1H050C	CHIP C	5.0PF	C	
C178			CC73FCH1H680J	CHIP C	68PF	J	
C179			CK73FF1E104Z	CHIP C	0.10UF	Z	
C180			CC73FCH1H020C	CHIP C	2.0PF	C	

Ref. No.	Address	New parts	Parts No.	Description			Destination
C181			CC73FCH1H050C	CHIP C	5.0PF	C	
C182			CK73FB1E103K	CHIP C	0.010UF	K	
C184			CC73FCH1H050C	CHIP C	5.0PF	C	
C185			CC73FCH1H220J	CHIP C	22PF	J	
C186			CC73FCH1H050C	CHIP C	5.0PF	C	
C187			CC73FCH1H1R5C	CHIP C	1.5PF	C	
C188			CC73FCH1H220J	CHIP C	22PF	J	
C189			CC73FCH1H0R5C	CHIP C	0.5PF	C	
C190			CK73FB1E103K	CHIP C	0.010UF	K	
C191			CC73FSL1H681J	CHIP C	680PF	J	
C192,193			CK73FB1H102K	CHIP C	1000PF	K	
C194			CC73FSL1H331J	CHIP C	330PF	J	
C195			CC73FSL1H471J	CHIP C	470PF	J	
C196			CK73FB1H102K	CHIP C	1000PF	K	
C197			CK73FB1E103K	CHIP C	0.010UF	K	
C198			CC73FCH1H020C	CHIP C	2.0PF	C	
C199			CK73FB1E103K	CHIP C	0.010UF	K	
C201-206			CK73FB1E103K	CHIP C	0.010UF	K	
C207			CC73FCH1H470J	CHIP C	47PF	J	
C208			CK73FF1E104Z	CHIP C	0.10UF	Z	
C209			CK73FB1H102K	CHIP C	1000PF	K	
C211,212			CK73FF1E104Z	CHIP C	0.10UF	Z	
C214			CK73FB1E103K	CHIP C	0.010UF	K	
C215			CK73FF1E104Z	CHIP C	0.10UF	Z	
C216			CE04EW1C100M	ELECTRO	10UF	16WV	
C217			CK73FF1E104Z	CHIP C	0.10UF	Z	
C218			CC73FCH1H470J	CHIP C	47PF	J	
C219			CK73FF1E104Z	CHIP C	0.10UF	Z	
C220			CE04EW1H010M	ELECTRO	1.0UF	50WV	
C221-223			CK73FF1E104Z	CHIP C	0.10UF	Z	
C224			CK73FB1E103K	CHIP C	0.010UF	K	
C225			CK73FB1H102K	CHIP C	1000PF	K	
C226-228			CK73FB1E103K	CHIP C	0.010UF	K	
C229			CC73FCH1H050C	CHIP C	5.0PF	C	
C230			CK73FB1E103K	CHIP C	0.010UF	K	
C231			CC73FCH1H220J	CHIP C	22PF	J	
C232			CK73FF1E104Z	CHIP C	0.10UF	Z	
C233			CK73FB1H102K	CHIP C	1000PF	K	
C234			CK73FF1E104Z	CHIP C	0.10UF	Z	
C236			CK73FB1E103K	CHIP C	0.010UF	K	
C237			CC73FCH1H220J	CHIP C	22PF	J	
C238			CK73FB1E103K	CHIP C	0.010UF	K	
C239			CK73FB1H471K	CHIP C	470PF	K	
C240,241			CK73FB1E103K	CHIP C	0.010UF	K	
C242			CC73FSL1H471J	CHIP C	470PF	J	
C243,244			CK73FB1E103K	CHIP C	0.010UF	K	
C245			CC73FSL1H471J	CHIP C	470PF	J	
C246			CC73FCH1H010C	CHIP C	1.0PF	C	
C247			CC73FSL1H471J	CHIP C	470PF	J	
C248			CK73FB1E103K	CHIP C	0.010UF	K	
C249			CC73FCH1H0R5C	CHIP C	0.5PF	C	
C250			CC73FCH1H010C	CHIP C	1.0PF	C	
C251-253			CK73FB1E103K	CHIP C	0.010UF	K	
C254			CK73FF1E104Z	CHIP C	0.10UF	Z	
C256,257			CK73FB1E103K	CHIP C	0.010UF	K	
C260			CK73FB1E103K	CHIP C	0.010UF	K	
C262,263			CK73FB1E103K	CHIP C	0.010UF	K	
C265-273			CK73FB1E103K	CHIP C	0.010UF	K	
C274			CC73FCH1H180J	CHIP C	18PF	J	

PARTS LSIT

RF UNIT (X44-3210-00)

Ref. No.	Address	New parts	Parts No.	Description			Destination
C275			CC73FCH1H150J	CHIP C	15PF	J	
C276			CC73FCH1H180J	CHIP C	18PF	J	
C277-279			CK73FB1E103K	CHIP C	0.010UF	K	
C280			CC73FCH1H101J	CHIP C	100PF	J	
C281,282			CC73FCH1H220J	CHIP C	22PF	J	
C283			CC73FCH1H330J	CHIP C	33PF	J	
C285			CK73FB1E223K	CHIP C	0.022UF	K	
C286			CE04EW1H010M	ELECTRO	1.0UF	50WV	
C287			CE04EW1C100M	ELECTRO	10UF	16WV	
C288			CK73FB1H473K	CHIP C	0.047UF	K	
C289			CE04EW1C100M	ELECTRO	10UF	16WV	
C290			CK73FB1E103K	CHIP C	0.010UF	K	
C291			CE04EW1HR47M	ELECTRO	0.47UF	50WV	
C292			CK73FB1E103K	CHIP C	0.010UF	K	
C293			CC73FCH1H101J	CHIP C	100PF	J	
C294			CK73FF1E104Z	CHIP C	0.10UF	Z	
C295-298			CK73FB1E103K	CHIP C	0.010UF	K	
C299,300			CK73FB1H103K	CHIP C	0.010UF	K	
C301			CK73FB1H102K	CHIP C	1000PF	K	
C302			CK73FB1H103K	CHIP C	0.010UF	K	
C303			CK73FB1H102K	CHIP C	1000PF	K	
C304			CK45FE2H222P	CERAMIC	2200PF	P	
C305			CK73FB1H103K	CHIP C	0.010UF	K	
C306,307			CK73FB1H102K	CHIP C	1000PF	K	
C308			CK73FB1H103K	CHIP C	0.010UF	K	
C310			CK73FB1H103K	CHIP C	0.010UF	K	
C312			CE04EW1C100M	ELECTRO	10UF	16WV	
C313,314			CK73FB1H103K	CHIP C	0.010UF	K	
C315			CE04EW1C100M	ELECTRO	10UF	16WV	
C316-327			CK73FB1H102K	CHIP C	1000PF	K	
C328-331			CK73FB1E103K	CHIP C	0.010UF	K	
C332			CK73FB1H102K	CHIP C	1000PF	K	
C333			CK73FB1E103K	CHIP C	0.010UF	K	
C334			CC73FCH1H330J	CHIP C	33PF	J	
C335			CK73FB1E103K	CHIP C	0.010UF	K	
C338			CC73FSL1H221J	CHIP C	220PF	J	
C339,340			CC73FCH1H220J	CHIP C	22PF	J	
C341-346			CK73FB1E103K	CHIP C	0.010UF	K	
C347,348			CC73FCH1H100D	CHIP C	10PF	D	
C350			C92-0004-05	CHIP-TAN	1.0UF	16WV	
C500			CK73FB1E103K	CHIP C	0.010UF	K	
C501			CE04NW1C100M	ELECTRO	10UF	16WV	
C502			CK73FB1E103K	CHIP C	0.010UF	K	
C503			CE04NW1C100M	ELECTRO	10UF	16WV	
C504			CK73FB1E103K	CHIP C	0.010UF	K	
C505			CE04EW1C100M	ELECTRO	10UF	16WV	
C506			CK73FB1E103K	CHIP C	0.010UF	K	
C507			CE04NW1C100M	ELECTRO	10UF	16WV	
C508			CK73FB1E103K	CHIP C	0.010UF	K	
C509			CE04NW1C100M	ELECTRO	10UF	16WV	
C510			CK73FB1E103K	CHIP C	0.010UF	K	
C511			CE04EW1C100M	ELECTRO	10UF	16WV	
C512,513			CK73FB1E103K	CHIP C	0.010UF	K	
C514			C92-0516-05	CHIP-TAN	4.7UF	16WV	
C515			CC73FSL1H271J	CHIP C	270PF	J	
C516			CC73FSL1H561J	CHIP C	560PF	J	
C517			CK73FB1E103K	CHIP C	0.010UF	K	
C518			CC73FSL1H271J	CHIP C	270PF	J	
C519,520			CK73FB1E103K	CHIP C	0.010UF	K	

Ref. No.	Address	New parts	Parts No.	Description			Destination
C521			CE04EW1C100M	ELECTRO	10UF	16WV	
C522			CK73FB1E103K	CHIP C	0.010UF	K	
C523			CC73FCH1H121J	CHIP C	120PF	J	
C524			CC73FSL1H181J	CHIP C	180PF	J	
C525			CC73FCH1H121J	CHIP C	120PF	J	
C526-530			CK73FB1E103K	CHIP C	0.010UF	K	
C531			CC73FCH1H560J	CHIP C	56PF	J	
C532			CC73FSL1H391J	CHIP C	390PF	J	
C533			CC73FCH1H390J	CHIP C	39PF	J	
C534			CC73FCH1H680J	CHIP C	68PF	J	
C535			CC73FCH1H390J	CHIP C	39PF	J	
C536			CC73FCH1H101J	CHIP C	100PF	J	
C537			CC73FCH1H680J	CHIP C	68PF	J	
C538			CC73FCH1H390J	CHIP C	39PF	J	
C539			CC73FCH1H070D	CHIP C	7.0PF	D	
C540			CC73FCH1H680J	CHIP C	68PF	J	
C541			CC73FCH1H220J	CHIP C	22PF	J	
C542			CC73FCH1H330J	CHIP C	33PF	J	
C543-545			CK73FB1E103K	CHIP C	0.010UF	K	
C546			CC73FCH1H121J	CHIP C	120PF	J	
C547			CE04EW1C470M	ELECTRO	47UF	16WV	
C548-555			CK73FB1E103K	CHIP C	0.010UF	K	
C556			CK73FB1H102K	CHIP C	1000PF	K	
C557			CC73FCH1H330J	CHIP C	33PF	J	
C558			CC73FCH1H0R5C	CHIP C	0.5PF	C	
C560			CC73FCH1H0R5C	CHIP C	0.5PF	C	
C561			CC73FCH1H330J	CHIP C	33PF	J	
C562-564			CK73FB1E103K	CHIP C	0.010UF	K	
C565			C92-0516-05	CHIP-TAN	4.7UF	16WV	
C566,567			CC73FCH1H470J	CHIP C	47PF	J	
C568			CC73FCH1H101J	CHIP C	100PF	J	
C569			CE04EW1C100M	ELECTRO	10UF	16WV	
C570,571			CK73FB1E103K	CHIP C	0.010UF	K	
C572			CC73FCH1H100D	CHIP C	10PF	D	
C573			CC73FCH1H050C	CHIP C	5.0PF	C	
C574-576			CK73FB1E103K	CHIP C	0.010UF	K	
C577			CK73FB1H331K	CHIP C	330PF	K	
C578			CC73FCH1H620J	CHIP C	62PF	J	
C579			CK73FB1H331K	CHIP C	330PF	K	
C581			CC73FCH1H820J	CHIP C	82PF	J	
C583			CK73FB1H103K	CHIP C	0.010UF	K	
C584			CE04EW1C100M	ELECTRO	10UF	16WV	
C585			CK73FB1H103K	CHIP C	0.010UF	K	
C586			CK73FB1H682K	CHIP C	6800PF	K	
C587			CK73FB1H123K	CHIP C	0.012UF	K	
C588			CK73FB1H682K	CHIP C	6800PF	K	
C591			CK73FB1H103K	CHIP C	0.010UF	K	
C593			CK73FB1H102K	CHIP C	1000PF	K	
C594			CC73FSL1H221J	CHIP C	220PF	J	
C595			CK73FB1H103K	CHIP C	0.010UF	K	
C596			CC73FCH1H0R5C	CHIP C	0.5PF	C	
C597			CC73FCH1H270J	CHIP C	27PF	J	
C598-602			CK73FB1H103K	CHIP C	0.010UF	K	
C603			CK73FB1H102K	CHIP C	1000PF	K	
C604			CK73FB1H103K	CHIP C	0.010UF	K	
C606			CC73FCH1H270J	CHIP C	27PF	J	
C618			CE04EW1C101M	ELECTRO	100UF	16WV	
C619			C92-0001-05	CHIP-TAN	0.10UF	35WV	
C620-623			CK73FB1H102K	CHIP C	1000PF	K	

PARTS LIST

RF UNIT (X44-3210-00)

Ref. No.	Address	New parts	Parts No.	Description			Destination
C624			CK73FB1E103K	CHIP C	0.010UF	K	
C625-628			CK73FB1H102K	CHIP C	1000PF	K	
C629			CE04EW1C101M	ELECTRO	100UF	16WV	
C630,631			CK73FB1E103K	CHIP C	0.010UF	K	
C630,631			CK73FB1E103K	CHIP C	0.010UF	K	
C632			CE04EW1C101M	ELECTRO	100UF	16WV	
C633			CC73FCH1H101J	CHIP C	100PF	J	
C634			CC73FCH1H180J	CHIP C	18PF	J	
C635			CK73FB1H102K	CHIP C	1000PF	K	
C636			CC73FCH1H330J	CHIP C	33PF	J	
C637			CC73FCH1H080D	CHIP C	8.0PF	D	
C638			CC73FCH1H120J	CHIP C	12PF	J	
C639			CC73FCH1H560J	CHIP C	56PF	J	
C640			CK73FB1H183K	CHIP C	0.018UF	K	
C641			CC73FCH1H120J	CHIP C	12PF	J	
C642			CK73FB1H102K	CHIP C	1000PF	K	
C643			CC73FCH1H330J	CHIP C	33PF	J	
C644			CC73FCH1H120J	CHIP C	12PF	J	
C645			CC73FCH1H150J	CHIP C	15PF	J	
C646			CC73FCH1H390J	CHIP C	39PF	J	
C647			CC73FCH1H100D	CHIP C	10PF	D	
C648			CK73FB1H102K	CHIP C	1000PF	K	
C649			CC73FCH1H160J	CHIP C	16PF	J	
C650			CC73FCH1H240J	CHIP C	24PF	J	
C651			CC73FCH1H150J	CHIP C	15PF	J	
C652			CC73FCH1H390J	CHIP C	39PF	J	
C653			CK73FB1H183K	CHIP C	0.018UF	K	
C654			CC73FCH1H040C	CHIP C	4.0PF	C	
C655			CK73FB1H102K	CHIP C	1000PF	K	
C656			CC73FCH1H150J	CHIP C	15PF	J	
C657			CC73FCH1H200J	CHIP C	20PF	J	
C658			CC73FCH1H160J	CHIP C	16PF	J	
C659,660			CK73FB1H102K	CHIP C	1000PF	K	
C661			CC73FCH1H100D	CHIP C	10PF	D	
C662			CC73FCH1H030C	CHIP C	3.0PF	C	
C663			CC73FCH1H020C	CHIP C	2.0PF	C	
C664			CC73FCH1H040C	CHIP C	4.0PF	C	
C665,666			CK73FB1H102K	CHIP C	1000PF	K	
C667			CK73FB1E103K	CHIP C	0.010UF	K	
C668			CK73FB1H102K	CHIP C	1000PF	K	
C669			CK73FB1E103K	CHIP C	0.010UF	K	
C670			CK73FB1H102K	CHIP C	1000PF	K	
C671			CC73FCH1H240J	CHIP C	24PF	J	
C672			CK73FB1H102K	CHIP C	1000PF	K	
C673			CC73FCH1H010C	CHIP C	1.0PF	C	
C674			CC73FCH1H240J	CHIP C	24PF	J	
C675			CK73FB1E103K	CHIP C	0.010UF	K	
C676			C92-0004-05	CHIP-TAN	1.0UF	16WV	
C677			CE04EW1C221M	ELECTRO	220UF	16WV	
C678			CK73FB1E103K	CHIP C	0.010UF	K	
C679			CQ92M1H822K	MYLAR	8200PF	K	
C680			C91-1083-05	FILM	0.47UF	63WV	
C681			CK73FB1H102K	CHIP C	1000PF	K	
C682,683			CK73FB1E103K	CHIP C	0.010UF	K	
C684			CK73FB1H103K	CHIP C	0.010UF	K	
C685,686			CK73FB1E103K	CHIP C	0.010UF	K	
C687			CC73FCH1H020C	CHIP C	2.0PF	C	
C688			CC73FCH1H1R5C	CHIP C	1.5PF	C	
C689			CC73FCH1H030C	CHIP C	3.0PF	C	

Ref. No.	Address	New parts	Parts No.	Description			Destination
C690			CC73FCH1H470J	CHIP C	47PF	J	
C691			CC73FCH1H270J	CHIP C	27PF	J	
C692-696			CK73FB1E103K	CHIP C	0.010UF	K	
C697			CE04EW1C100M	ELECTRO	10UF	16WV	
C698			CK73FB1H102K	CHIP C	1000PF	K	
C699			CK73FB1E103K	CHIP C	0.010UF	K	
C700			CK73FB1H102K	CHIP C	1000PF	K	
C701			CC73FCH1H330J	CHIP C	33PF	J	
C702			CC73FCH1H100D	CHIP C	10PF	D	
C703			CC73FCH1H680J	CHIP C	68PF	J	
C704,705			CK73FB1H103K	CHIP C	0.010UF	K	
C706			CE04EW1C470M	ELECTRO	47UF	16WV	
C707			CK73FB1H103K	CHIP C	0.010UF	K	
C708			CE04EW1C101M	ELECTRO	100UF	16WV	
C710			CK73FB1H102K	CHIP C	1000PF	K	
C711			CQ92M1H333K	MYLAR	0.033UF	K	
C712			C91-1083-05	FILM	0.47UF	63WV	
C713			CK73FB1H103K	CHIP C	0.010UF	K	
C714			C92-0516-05	CHIP-TAN	4.7UF	16WV	
C715,716			CK73FB1H102K	CHIP C	1000PF	K	
C717			CE04EW1C101M	ELECTRO	100UF	16WV	
C719			CC73FCH1H020C	CHIP C	2.0PF	C	
C721-726			CC73FCH1H270J	CHIP C	27PF	J	
C727,728			CC73FCH1H100D	CHIP C	10PF	D	
C729			CC73FCH1H020C	CHIP C	2.0PF	C	
C730-732			CK73FB1H102K	CHIP C	1000PF	K	
C744			CK73FB1H102K	CHIP C	1000PF	K	
C750-757			CC73FCH1H101J	CHIP C	100PF	J	
C758-761			CK73FB1H102K	CHIP C	1000PF	K	
C762			CC73FCH1H101J	CHIP C	100PF	J	
C770			CE04EW1C470M	ELECTRO	47UF	16WV	
C771			CK73FB1H103K	CHIP C	0.010UF	K	
C780			CE04EW1E470M	ELECTRO	47UF	25WV	
C781,782			CK73FF1E104Z	CHIP C	0.10UF	Z	
C783			CE04EW1C470M	ELECTRO	47UF	16WV	
C784			CE04EW1E470M	ELECTRO	47UF	25WV	
C785,786			CK73FF1E104Z	CHIP C	0.10UF	Z	
C787			CE04EW1C470M	ELECTRO	47UF	16WV	
C800			CC73FCH1H390J	CHIP C	39PF	J	
C801			CC73FCH1H151J	CHIP C	150PF	J	
C802			CC73FCH1H390J	CHIP C	39PF	J	
C803			CC73FCH1H050C	CHIP C	5.0PF	C	
C804			CK73FB1H103K	CHIP C	0.010UF	K	
C805			CC73FCH1H020C	CHIP C	2.0PF	C	
C806,807			CK73FB1H103K	CHIP C	0.010UF	K	
C808			C92-0004-05	CHIP-TAN	1.0UF	16WV	
C907-912			CK73FB1H102K	CHIP C	1000PF	K	
C914-926			CK73FB1H102K	CHIP C	1000PF	K	
TC506,507			C05-0377-05	TRIMMER CAPACITOR		10PF	
TC508,509			C05-0376-05	TRIMMER CAPACITOR		6PF	
TC800			C05-0344-05	TRIMMER CAPACITOR		30PF	
CN2			E04-0154-05	RF COAXIAL CABLE SOCKET			
CN4			E04-0154-05	RF COAXIAL CABLE SOCKET			
CN5,6			E04-0191-05	RF COAXIAL CABLE SOCKET			
CN7			E40-3238-05	PIN CONNECTOR (3P)			
CN10			E04-0154-05	RF COAXIAL CABLE SOCKET			
CN13		*	E40-5741-05	PIN CONNECTOR (8P)			
CN14		*	E40-5740-05	PIN CONNECTOR (20P)			

PARTS LSIT

RF UNIT (X44-3210-00)

Ref. No.	Address	New parts	Parts No.	Description	Destination
CN15-17			E04-0154-05	RF COAXIAL CABLE SOCKET	
CN500		*	E40-5740-05	PIN CONNECTOR (20P)	
CN501			E40-3237-05	PIN CONNECTOR (2P)	
CN502-505			E04-0154-05	RF COAXIAL CABLE SOCKET (2P)	
CN506			E40-3238-05	PIN CONNECTOR (3P)	
CN508			E40-5606-05	PIN CONNECTOR (3P)	
CN509			E40-5607-05	PIN CONNECTOR (4P)	
CN510			E23-0996-05	TERMINAL (TEST)	
CN800			E40-4463-05	PIN CONNECTOR	
CN801			E40-4464-05	PIN CONNECTOR	
CN901			E40-3300-05	PIN CONNECTOR (3P)	
CN903-907		*	E40-5743-05	FLAT CABLE CONNECTOR (6P)	
J1			E06-0752-05	DIN SOCKET	
J2,3			E13-0166-05	PIN JACK	
J901		*	E11-0462-05	PHONE JACK	
W1		*	E37-0546-05	LEAD WIRE WITH CONNECTOR	
W2		*	E37-0517-05	LEAD WIRE WITH MINIPIN PLUG	
101	2F		F11-1141-04	SHIELDING COVER	
A502	2F		F11-1140-04	SHIELDING CASE	
–			J30-0545-05	SPACER (TO XF1)	
–			J30-0563-05	SPACER (TO XF3, X800)	
CF500,501			L72-0343-05	CERAMIC FILTER (8.4MHZ)	
L1		*	L39-1254-05	COIL	
L2			L19-0324-05	TROIDAL COIL	
L3			L40-1021-14	SMALL FIXED INDUCTOR	
L7			L40-2701-14	SMALL FIXED INDUCTOR	
L8			L40-4791-14	SMALL FIXED INDUCTOR	
L9			L40-2701-14	SMALL FIXED INDUCTOR	
L10			L40-1015-48	SMALL FIXED INDUCTOR (100UH)	
L11			L19-0324-05	TROIDAL COIL	
L12			L40-1005-48	SMALL FIXED INDUCTOR (10UH)	
L13			L40-4705-48	SMALL FIXED INDUCTOR (47UH)	
L14,15			L40-1501-14	SMALL FIXED INDUCTOR	
L16			L40-1021-14	SMALL FIXED INDUCTOR	
L17,18			L40-5691-14	SMALL FIXED INDUCTOR	
L19			L40-1292-14	SMALL FIXED INDUCTOR	
L20			L40-8291-14	SMALL FIXED INDUCTOR	
L21,22			L40-1292-14	SMALL FIXED INDUCTOR	
L23			L40-5691-14	SMALL FIXED INDUCTOR	
L24			L40-1292-14	SMALL FIXED INDUCTOR	
L25			L40-1092-14	SMALL FIXED INDUCTOR	
L26			L40-3391-14	SMALL FIXED INDUCTOR	
L27			L40-1092-14	SMALL FIXED INDUCTOR	
L28-31			L34-4262-05	COIL	
L32			L40-3382-14	SMALL FIXED INDUCTOR	
L33			L40-2792-14	SMALL FIXED INDUCTOR	
L34			L40-3382-14	SMALL FIXED INDUCTOR	
L35			L40-2282-14	SMALL FIXED INDUCTOR	
L36			L40-2292-14	SMALL FIXED INDUCTOR	
L37			L40-2282-14	SMALL FIXED INDUCTOR	
L38-40			L34-4289-05	COIL	
L41			L40-2282-14	SMALL FIXED INDUCTOR	
L42			L40-1292-14	SMALL FIXED INDUCTOR	
L43			L40-2282-14	SMALL FIXED INDUCTOR	
L44-46		*	L34-4392-05	COIL	
L47			L40-2282-14	SMALL FIXED INDUCTOR	
L48			L40-1292-14	SMALL FIXED INDUCTOR	

Ref. No.	Address	New parts	Parts No.	Description	Destination
L49			L40-2282-14	SMALL FIXED INDUCTOR	
L50			L34-4264-05	COIL	
L51			L40-1021-14	SMALL FIXED INDUCTOR	
L52			L34-4265-05	COIL	
L53			L19-0324-05	TROIDAL COIL	
L54			L40-4785-48	SMALL FIXED INDUCTOR (470NH)	
L55			L19-0324-05	TROIDAL COIL	
L56			L40-4705-48	SMALL FIXED INDUCTOR (47UH)	
L57			L40-2785-48	SMALL FIXED INDUCTOR (270NH)	
L58			L40-2285-48	SMALL FIXED INDUCTOR (220NH)	
L59			L19-0324-05	TROIDAL COIL	
L60			L39-1255-05	COIL	
L61			L40-1285-48	SMALL FIXED INDUCTOR (120NH)	
L62			L39-1255-05	COIL	
L63			L40-1015-48	SMALL FIXED INDUCTOR (100NH)	
L64			L39-1255-05	COIL	
L65			L34-4222-05	COIL	
L67		*	L34-4394-05	COIL	
L68			L40-1015-48	SMALL FIXED INDUCTOR (100UH)	
L69			L40-2285-48	SMALL FIXED INDUCTOR (220NH)	
L70		*	L34-4393-05	COIL	
L71			L40-3395-48	SMALL FIXED INDUCTOR (3.3UH)	
L72		*	L34-4394-05	COIL	
L73			L40-2295-48	SMALL FIXED INDUCTOR (2.2UH)	
L74			L40-2285-48	SMALL FIXED INDUCTOR (220NH)	
L75			L34-4209-05	COIL	
L76			L40-3395-48	SMALL FIXED INDUCTOR (3.3UH)	
L77			L34-0943-05	COIL	
L78			L40-4785-48	SMALL FIXED INDUCTOR (470NH)	
L79			L40-3395-48	SMALL FIXED INDUCTOR (3.3UH)	
L81			L34-0535-05	COIL	
L82			L34-0536-05	COIL	
L83,84			L40-1015-48	SMALL FIXED INDUCTOR (100UH)	
L86			L40-2285-48	SMALL FIXED INDUCTOR (220NH)	
L87			L40-4705-48	SMALL FIXED INDUCTOR (47UH)	
L88			L19-0324-05	TROIDAL COIL	
L89		*	L34-4395-05	COIL	
L90			L39-1255-05	COIL	
L91		*	L34-4395-05	COIL	
L92			L34-4211-05	COIL	
L93			L40-1015-48	SMALL FIXED INDUCTOR (100UH)	
L94		*	L34-4395-05	COIL	
L95			L34-4207-05	COIL	
L98			L34-0943-05	COIL	
L99			L34-0781-05	COIL	
L100			L34-0536-05	COIL	
L101			L40-4705-48	SMALL FIXED INDUCTOR (47UH)	
L102			L40-3395-48	SMALL FIXED INDUCTOR (3.3UH)	
L107			L40-1015-48	SMALL FIXED INDUCTOR (100UH)	
L108			L40-1005-48	SMALL FIXED INDUCTOR (10UH)	
L110,111		*	L40-1805-48	SMALL FIXED INDUCTOR (18UH)	
L112,113		*	L40-1081-42	SMALL FIXED INDUCTOR (0.1UH)	
L301		*	L40-1001-42	SMALL FIXED INDUCTOR (10UH)	
L304-310		*	L40-1001-42	SMALL FIXED INDUCTOR (10UH)	
L314-318		*	L40-1001-42	SMALL FIXED INDUCTOR (10UH)	
L500-505			L40-1005-48	SMALL FIXED INDUCTOR (10UH)	
L506,507		*	L40-6805-48	SMALL FIXED INDUCTOR (68UH)	
L508			L40-1005-48	SMALL FIXED INDUCTOR (10UH)	
L509,510		*	L40-2705-48	SMALL FIXED INDUCTOR (27UH)	

PARTS LIST

RF UNIT (X44-3210-00)

Ref. No.	Address	New parts	Parts No.	Description	Destination
L511		*	L40-1805-48	SMALL FIXED INDUCTOR (18UH)	
L512,513		*	L40-2705-48	SMALL FIXED INDUCTOR (27UH)	
L514			L40-2205-48	SMALL FIXED INDUCTOR (22UH)	
L515		*	L40-1805-48	SMALL FIXED INDUCTOR (18UH)	
L516			L40-5695-48	SMALL FIXED INDUCTOR (5.6UH)	
L517			L40-1005-48	SMALL FIXED INDUCTOR (10UH)	
L518			L34-4222-05	COIL	
L519		*	L34-4421-05	COIL	
L520			L34-4222-05	COIL	
L521,522			L40-2285-48	SMALL FIXED INDUCTOR (220NH)	
L523			L40-1005-48	SMALL FIXED INDUCTOR (10UH)	
L524			L40-1095-48	SMALL FIXED INDUCTOR (1UH)	
L525,526			L40-2205-48	SMALL FIXED INDUCTOR (22UH)	
L528		*	L34-4396-05	COIL	
L529,530			L34-4222-05	COIL	
L531-534			L40-1015-48	SMALL FIXED INDUCTOR (100UH)	
L535			L33-0664-05	CHOKE COIL	
L536			L34-2354-05	COIL	
L537			L40-4795-48	SMALL FIXED INDUCTOR (4.7UH)	
L538			L33-0664-05	CHOKE COIL	
L539			L34-2354-05	COIL	
L540			L40-4795-48	SMALL FIXED INDUCTOR (4.7UH)	
L541			L33-0664-05	CHOKE COIL	
L542			L34-2354-05	COIL	
L543			L40-4795-48	SMALL FIXED INDUCTOR (4.7UH)	
L544			L33-0664-05	CHOKE COIL	
L545			L34-2354-05	COIL	
L546			L40-4795-48	SMALL FIXED INDUCTOR (4.7UH)	
L547			L40-3385-48	SMALL FIXED INDUCTOR (330NH)	
L548			L40-1295-48	SMALL FIXED INDUCTOR (1.2UH)	
L549			L40-3385-48	SMALL FIXED INDUCTOR (330NH)	
L550			L40-2285-48	SMALL FIXED INDUCTOR (220NH)	
L551			L40-1015-48	SMALL FIXED INDUCTOR (100NH)	
L552		*	L40-2795-48	SMALL FIXED INDUCTOR (2.7UH)	
L553			L40-1595-48	SMALL FIXED INDUCTOR (1.5UH)	
L554			L40-2295-48	SMALL FIXED INDUCTOR (2.2UH)	
L555			L40-3395-48	SMALL FIXED INDUCTOR (3.3UH)	
L556			L40-2285-48	SMALL FIXED INDUCTOR (220NH)	
L557-559			L40-1015-48	SMALL FIXED INDUCTOR (100UH)	
L580,581			L40-1005-48	SMALL FIXED INDUCTOR (10UH)	
L601			L40-3395-48	SMALL FIXED INDUCTOR (3.3UH)	
L603			L40-2785-48	SMALL FIXED INDUCTOR (270NH)	
L604			L40-1015-48	SMALL FIXED INDUCTOR (100UH)	
X800			L77-1521-15	CRYSTAL RESONATOR (20MHZ)	
XF1			L71-0401-05	CRYSTAL FILTER (73.05MHZ)	
XF2			L71-0235-05	CRYSTAL FILTER	
XF3			L71-0266-05	CRYSTAL FILTER (8830KHZ)	
Q	2F		N38-2640-46	PAN HEAD MACHINE SCREW	
CP500-505			R90-0721-05	MULTI-COMP 4.7K X 16	
R1			RD14BB2E470J	RD 47 J 1/4W	
R2			RD14BB2E151J	RD 150 J 1/4W	
R3			RK73FB2A101J	CHIP R 100 J 1/10W	
R5			RD14BB2E101J	RD 100 J 1/4W	
R7			RD14BB2E820J	RD 82 J 1/4W	
R9			RK73FB2A221J	CHIP R 220 J 1/10W	
R10			RK73FB2A181J	CHIP R 180 J 1/10W	
R11,12			RK73FB2A331J	CHIP R 330 J 1/10W	
R13			RK73FB2A470J	CHIP R 47 J 1/10W	

Ref. No.	Address	New parts	Parts No.	Description	Destination
R14			RK73FB2A222J	CHIP R 2.2K J 1/10W	
R18			RK73FB2A103J	CHIP R 10K J 1/10W	
R19			RK73FB2A330J	CHIP R 33 J 1/10W	
R20			RK73FB2A102J	CHIP R 1.0K J 1/10W	
R21,22			RK73FB2A330J	CHIP R 33 J 1/10W	
R23			RK73FB2A101J	CHIP R 100 J 1/10W	
R24			RK73FB2A222J	CHIP R 2.2K J 1/10W	
R25			RK73FB2A561J	CHIP R 560 J 1/10W	
R27			RK73FB2A181J	CHIP R 180 J 1/10W	
R28			RK73FB2A680J	CHIP R 68 J 1/10W	
R31			RK73FB2A103J	CHIP R 10K J 1/10W	
R44-55			RK73FB2A223J	CHIP R 22K J 1/10W	
R56			RK73FB2A121J	CHIP R 120 J 1/10W	
R58			RK73FB2A680J	CHIP R 68 J 1/10W	
R59,60			RK73FB2A560J	CHIP R 56 J 1/10W	
R61			RK73FB2A680J	CHIP R 68 J 1/10W	
R62			RK73FB2A220J	CHIP R 22 J 1/10W	
R63			RK73FB2A121J	CHIP R 120 J 1/10W	
R65			RK73FB2A220J	CHIP R 22 J 1/10W	
R66			RK73FB2A121J	CHIP R 120 J 1/10W	
R68			RK73FB2A220J	CHIP R 22 J 1/10W	
R69			RK73FB2A121J	CHIP R 120 J 1/10W	
R71			RK73FB2A220J	CHIP R 22 J 1/10W	
R72			RK73FB2A121J	CHIP R 120 J 1/10W	
R74			RK73FB2A220J	CHIP R 22 J 1/10W	
R75			RK73FB2A121J	CHIP R 120 J 1/10W	
R77			RK73FB2A220J	CHIP R 22 J 1/10W	
R78			RK73FB2A121J	CHIP R 120 J 1/10W	
R80			RK73FB2A220J	CHIP R 22 J 1/10W	
R81			RK73FB2A121J	CHIP R 120 J 1/10W	
R83			RK73FB2A220J	CHIP R 22 J 1/10W	
R84			RK73FB2A121J	CHIP R 120 J 1/10W	
R86			RK73FB2A220J	CHIP R 22 J 1/10W	
R87			RK73FB2A121J	CHIP R 120 J 1/10W	
R89			RK73FB2A220J	CHIP R 22 J 1/10W	
R90			RK73FB2A121J	CHIP R 120 J 1/10W	
R92			RK73FB2A151J	CHIP R 150 J 1/10W	
R93			RK73FB2A223J	CHIP R 22K J 1/10W	
R94			RK73FB2A104J	CHIP R 100K J 1/10W	
R95			RK73FB2A393J	CHIP R 39K J 1/10W	
R96,97			RK73FB2A330J	CHIP R 33 J 1/10W	
R98			RK73FB2A473J	CHIP R 47K J 1/10W	
R99			RK73FB2A151J	CHIP R 150 J 1/10W	
R100			RK73FB2A331J	CHIP R 330 J 1/10W	
R101			RK73FB2A221J	CHIP R 220 J 1/10W	
R102			RK73FB2A101J	CHIP R 100 J 1/10W	
R103			RK73FB2A473J	CHIP R 47K J 1/10W	
R104,105			RK73FB2A151J	CHIP R 150 J 1/10W	
R106			RK73FB2A152J	CHIP R 1.5K J 1/10W	
R107			RK73FB2A680J	CHIP R 68 J 1/10W	
R108			RK73FB2A220J	CHIP R 22 J 1/10W	
R109			RK73FB2A100J	CHIP R 10 J 1/10W	
R110			RK73FB2A151J	CHIP R 150 J 1/10W	
R111			RK73FB2A471J	CHIP R 470 J 1/10W	
R112			RK73FB2A102J	CHIP R 1.0K J 1/10W	
R113			RK73FB2A471J	CHIP R 470 J 1/10W	
R114			RK73FB2A562J	CHIP R 5.6K J 1/10W	
R115			RK73FB2A220J	CHIP R 22 J 1/10W	
R116			RK73FB2A150J	CHIP R 15 J 1/10W	

PARTS LSIT

RF UNIT (X44-3210-00)

Ref. No.	Address	New parts	Parts No.	Description			Destination
R117			RK73FB2A471J	CHIP R	470	J 1/10W	
R118			RK73FB2A680J	CHIP R	68	J 1/10W	
R119,120			RK73FB2A331J	CHIP R	330	J 1/10W	
R121			RK73FB2A102J	CHIP R	1.0K	J 1/10W	
R122,123			RK73FB2A100J	CHIP R	10	J 1/10W	
R124			RK73FB2A471J	CHIP R	470	J 1/10W	
R125,126			RK73FB2A100J	CHIP R	10	J 1/10W	
R127			RK73FB2A180J	CHIP R	18	J 1/10W	
R128			RK73FB2A331J	CHIP R	330	J 1/10W	
R130			RK73FB2A331J	CHIP R	330	J 1/10W	
R131			RK73FB2A101J	CHIP R	100	J 1/10W	
R132			RK73FB2A223J	CHIP R	22K	J 1/10W	
R133			RK73FB2A333J	CHIP R	33K	J 1/10W	
R134			RK73FB2A122J	CHIP R	1.2K	J 1/10W	
R139			RK73FB2A104J	CHIP R	100K	J 1/10W	
R140			RK73FB2A473J	CHIP R	47K	J 1/10W	
R142			RK73FB2A473J	CHIP R	47K	J 1/10W	
R143			RK73FB2A471J	CHIP R	470	J 1/10W	
R144			RK73FB2A221J	CHIP R	220	J 1/10W	
R145			RK73FB2A330J	CHIP R	33	J 1/10W	
R146			RK73FB2A471J	CHIP R	470	J 1/10W	
R147			RK73FB2A562J	CHIP R	5.6K	J 1/10W	
R148			RK73FB2A223J	CHIP R	22K	J 1/10W	
R150			RK73FB2A181J	CHIP R	180	J 1/10W	
R154			RK73FB2A471J	CHIP R	470	J 1/10W	
R156			RK73FB2A330J	CHIP R	33	J 1/10W	
R157			RK73FB2A182J	CHIP R	1.8K	J 1/10W	
R158			RK73FB2A330J	CHIP R	33	J 1/10W	
R159			RK73FB2A101J	CHIP R	100	J 1/10W	
R160,161			RK73FB2A222J	CHIP R	2.2K	J 1/10W	
R162			RK73FB2A101J	CHIP R	100	J 1/10W	
R163			RK73FB2A332J	CHIP R	3.3K	J 1/10W	
R164			RK73FB2A152J	CHIP R	1.5K	J 1/10W	
R165			RK73FB2A473J	CHIP R	47K	J 1/10W	
R166			RK73FB2A222J	CHIP R	2.2K	J 1/10W	
R167			RK73FB2A101J	CHIP R	100	J 1/10W	
R168			RK73FB2A393J	CHIP R	39K	J 1/10W	
R169			RK73FB2A102J	CHIP R	1.0K	J 1/10W	
R170			RK73FB2A223J	CHIP R	22K	J 1/10W	
R171,172			RK73FB2A101J	CHIP R	100	J 1/10W	
R173			RK73FB2A393J	CHIP R	39K	J 1/10W	
R174			RK73FB2A223J	CHIP R	22K	J 1/10W	
R175			RK73FB2A102J	CHIP R	1.0K	J 1/10W	
R176			RK73FB2A103J	CHIP R	10K	J 1/10W	
R177			RK73FB2A153J	CHIP R	15K	J 1/10W	
R178			RK73FB2A563J	CHIP R	56K	J 1/10W	
R179			RK73FB2A103J	CHIP R	10K	J 1/10W	
R180			RK73FB2A104J	CHIP R	100K	J 1/10W	
R181			RK73FB2A222J	CHIP R	2.2K	J 1/10W	
R182			RK73FB2A103J	CHIP R	10K	J 1/10W	
R183			RK73FB2A470J	CHIP R	47	J 1/10W	
R184			RK73FB2A121J	CHIP R	120	J 1/10W	
R185			RK73FB2A103J	CHIP R	10K	J 1/10W	
R186			RK73FB2A562J	CHIP R	5.6K	J 1/10W	
R188			RK73FB2A470J	CHIP R	47	J 1/10W	
R189			RK73FB2A152J	CHIP R	1.5K	J 1/10W	
R190			RK73FB2A103J	CHIP R	10K	J 1/10W	
R191			RK73FB2A151J	CHIP R	150	J 1/10W	
R192			RK73FB2A102J	CHIP R	1.0K	J 1/10W	

Ref. No.	Address	New parts	Parts No.	Description			Destination
R195,196			RK73FB2A330J	CHIP R	33	J 1/10W	
R197			RK73FB2A273J	CHIP R	27K	J 1/10W	
R198			RK73FB2A103J	CHIP R	10K	J 1/10W	
R199,200			RK73FB2A221J	CHIP R	220	J 1/10W	
R201			RK73FB2A473J	CHIP R	47K	J 1/10W	
R202,203			RK73FB2A680J	CHIP R	68	J 1/10W	
R204			RK73FB2A101J	CHIP R	100	J 1/10W	
R205,206			RK73FB2A471J	CHIP R	470	J 1/10W	
R207,208			RK73FB2A330J	CHIP R	33	J 1/10W	
R209			RK73FB2A471J	CHIP R	470	J 1/10W	
R210			RK73FB2A102J	CHIP R	1.0K	J 1/10W	
R211			RK73FB2A472J	CHIP R	4.7K	J 1/10W	
R212,213			RK73FB2A330J	CHIP R	33	J 1/10W	
R214			RK73FB2A103J	CHIP R	10K	J 1/10W	
R215			RK73FB2A823J	CHIP R	82K	J 1/10W	
R216			RK73FB2A681J	CHIP R	680	J 1/10W	
R217			RK73FB2A151J	CHIP R	150	J 1/10W	
R218			RK73FB2A332J	CHIP R	3.3K	J 1/10W	
R219			RK73FB2A103J	CHIP R	10K	J 1/10W	
R220			RK73FB2A101J	CHIP R	100	J 1/10W	
R221			RK73FB2A102J	CHIP R	1.0K	J 1/10W	
R222			RK73FB2A103J	CHIP R	10K	J 1/10W	
R223			RK73FB2A392J	CHIP R	3.9K	J 1/10W	
R224			RK73FB2A332J	CHIP R	3.3K	J 1/10W	
R225			RK73FB2A223J	CHIP R	22K	J 1/10W	
R226			RK73FB2A562J	CHIP R	5.6K	J 1/10W	
R229			RK73FB2A103J	CHIP R	10K	J 1/10W	
R230			RK73FB2A152J	CHIP R	1.5K	J 1/10W	
R231,232			RK73FB2A221J	CHIP R	220	J 1/10W	
R233			RK73FB2A152J	CHIP R	1.5K	J 1/10W	
R234			RK73FB2A101J	CHIP R	100	J 1/10W	
R235			RK73FB2A152J	CHIP R	1.5K	J 1/10W	
R236,237			RK73FB2A101J	CHIP R	100	J 1/10W	
R238			RK73FB2A152J	CHIP R	1.5K	J 1/10W	
R239			RK73FB2A101J	CHIP R	100	J 1/10W	
R240			RK73FB2A152J	CHIP R	1.5K	J 1/10W	
R241,242			RK73FB2A331J	CHIP R	330	J 1/10W	
R243			RK73FB2A152J	CHIP R	1.5K	J 1/10W	
R244			RK73FB2A101J	CHIP R	100	J 1/10W	
R245			RK73FB2A152J	CHIP R	1.5K	J 1/10W	
R246			RK73FB2A221J	CHIP R	220	J 1/10W	
R248			RK73FB2A822J	CHIP R	8.2K	J 1/10W	
R249			RK73FB2A222J	CHIP R	2.2K	J 1/10W	
R250			RK73FB2A103J	CHIP R	10K	J 1/10W	
R251			RK73FB2A153J	CHIP R	15K	J 1/10W	
R252			RK73FB2A102J	CHIP R	1.0K	J 1/10W	
R253			RK73FB2A472J	CHIP R	4.7K	J 1/10W	
R256			RK73FB2A472J	CHIP R	4.7K	J 1/10W	
R257			RK73FB2A101J	CHIP R	100	J 1/10W	
R258			RK73FB2A331J	CHIP R	330	J 1/10W	
R259			RK73FB2A104J	CHIP R	100K	J 1/10W	
R260			RK73FB2A102J	CHIP R	1.0K	J 1/10W	
R261			RK73FB2A331J	CHIP R	330	J 1/10W	
R262			RK73FB2A102J	CHIP R	1.0K	J 1/10W	
R263			RK73FB2A332J	CHIP R	3.3K	J 1/10W	
R264			RK73FB2A222J	CHIP R	2.2K	J 1/10W	
R265			RK73FB2A272J	CHIP R	2.7K	J 1/10W	
R266			RK73FB2A332J	CHIP R	3.3K	J 1/10W	
R267			RK73FB2A822J	CHIP R	8.2K	J 1/10W	

PARTS LIST

RF UNIT (X44-3210-00)

Ref. No.	Address	New parts	Parts No.	Description			Destination
R268			RK73FB2A273J	CHIP R	27K	J 1/10W	
R269			RK73FB2A103J	CHIP R	10K	J 1/10W	
R271			RK73FB2A224J	CHIP R	220K	J 1/10W	
R272			RK73FB2A104J	CHIP R	100K	J 1/10W	
R276			RK73FB2A474J	CHIP R	470K	J 1/10W	
R277			RK73FB2A103J	CHIP R	10K	J 1/10W	
R278			RK73FB2A224J	CHIP R	220K	J 1/10W	
R279			RK73FB2A473J	CHIP R	47K	J 1/10W	
R280			RK73FB2A223J	CHIP R	22K	J 1/10W	
R281			RK73FB2A222J	CHIP R	2.2K	J 1/10W	
R284			RK73FB2A224J	CHIP R	220K	J 1/10W	
R285			RK73FB2A103J	CHIP R	10K	J 1/10W	
R286			RK73FB2A101J	CHIP R	100	J 1/10W	
R287			RK73FB2A103J	CHIP R	10K	J 1/10W	
R288			RK73FB2A472J	CHIP R	4.7K	J 1/10W	
R289			RK73FB2A103J	CHIP R	10K	J 1/10W	
R290,291			RK73FB2A472J	CHIP R	4.7K	J 1/10W	
R292,293			RK73FB2A681J	CHIP R	680	J 1/10W	
R294-297			RK73FB2A224J	CHIP R	220K	J 1/10W	
R298			RK73FB2A472J	CHIP R	4.7K	J 1/10W	
R320			RK73FB2A472J	CHIP R	4.7K	J 1/10W	
R322,323			RK73FB2A223J	CHIP R	22K	J 1/10W	
R324			RK73FB2A101J	CHIP R	100	J 1/10W	
R325			RK73FB2A102J	CHIP R	1.0K	J 1/10W	
R329			RK73FB2A224J	CHIP R	220K	J 1/10W	
R330			RK73FB2A104J	CHIP R	100K	J 1/10W	
R331			RK73FB2A684J	CHIP R	680K	J 1/10W	
R332			RK73FB2A103J	CHIP R	10K	J 1/10W	
R333			RK73FB2A680J	CHIP R	68	J 1/10W	
R334			RK73FB2A391J	CHIP R	390	J 1/10W	
R335			RK73FB2A272J	CHIP R	2.7K	J 1/10W	
R336,337			RK73FB2A104J	CHIP R	100K	J 1/10W	
R338			RK73FB2A154J	CHIP R	150K	J 1/10W	
R339			RK73FB2A224J	CHIP R	220K	J 1/10W	
R340			RK73FB2A101J	CHIP R	100	J 1/10W	
R351-362			RK73FB2A103J	CHIP R	10K	J 1/10W	
R363			R92-0670-05	CHIP R	0 OHM		
R380			RK73FB2A682J	CHIP R	6.8K	J 1/10W	
R381			RK73FB2A183J	CHIP R	18K	J 1/10W	
R382			RK73FB2A181J	CHIP R	180	J 1/10W	
R383-385			R92-0670-05	CHIP R	0 OHM		
R386			RK73FB2A330J	CHIP R	33	J 1/10W	
R500			RK73FB2A103J	CHIP R	10K	J 1/10W	
R501			RK73FB2A470J	CHIP R	47	J 1/10W	
R502			RK73FB2A331J	CHIP R	330	J 1/10W	
R503			RK73FB2A472J	CHIP R	4.7K	J 1/10W	
R504			RK73FB2A681J	CHIP R	680	J 1/10W	
R505			RK73FB2A561J	CHIP R	560	J 1/10W	
R506			RK73FB2A333J	CHIP R	33K	J 1/10W	
R507			RK73FB2A101J	CHIP R	100	J 1/10W	
R508			RK73FB2A272J	CHIP R	2.7K	J 1/10W	
R509			RK73FB2A681J	CHIP R	680	J 1/10W	
R510			RK73FB2A470J	CHIP R	47	J 1/10W	
R511			RK73FB2A122J	CHIP R	1.2K	J 1/10W	
R512			RK73FB2A472J	CHIP R	4.7K	J 1/10W	
R513			RK73FB2A103J	CHIP R	10K	J 1/10W	
R514			RK73FB2A220J	CHIP R	22	J 1/10W	
R515			RK73FB2A331J	CHIP R	330	J 1/10W	
R516			RK73FB2A560J	CHIP R	56	J 1/10W	

Ref. No.	Address	New parts	Parts No.	Description			Destination
R517-519			RK73FB2A470J	CHIP R	47	J 1/10W	
R520			RK73FB2A101J	CHIP R	100	J 1/10W	
R521			RK73FB2A223J	CHIP R	22K	J 1/10W	
R522			RK73FB2A331J	CHIP R	330	J 1/10W	
R523			RK73FB2A470J	CHIP R	47	J 1/10W	
R524,525			RK73FB2A102J	CHIP R	1.0K	J 1/10W	
R526			RK73FB2A331J	CHIP R	330	J 1/10W	
R527			RK73FB2A680J	CHIP R	68	J 1/10W	
R528			RK73FB2A391J	CHIP R	390	J 1/10W	
R529			RK73FB2A680J	CHIP R	68	J 1/10W	
R530			RK73FB2A103J	CHIP R	10K	J 1/10W	
R531			RK73FB2A222J	CHIP R	2.2K	J 1/10W	
R532			RK73FB2A151J	CHIP R	150	J 1/10W	
R533			RK73FB2A680J	CHIP R	68	J 1/10W	
R534			RK73FB2A101J	CHIP R	100	J 1/10W	
R535			RK73FB2A471J	CHIP R	470	J 1/10W	
R536			RK73FB2A470J	CHIP R	47	J 1/10W	
R537			RK73FB2A220J	CHIP R	22	J 1/10W	
R545			RK73FB2A103J	CHIP R	10K	J 1/10W	
R546			RK73FB2A821J	CHIP R	820	J 1/10W	
R547			RK73FB2A331J	CHIP R	330	J 1/10W	
R548,549			RK73FB2A470J	CHIP R	47	J 1/10W	
R550			RK73FB2A181J	CHIP R	180	J 1/10W	
R551			RK73FB2A221J	CHIP R	220	J 1/10W	
R552			RK73FB2A101J	CHIP R	100	J 1/10W	
R553			RK73FB2A333J	CHIP R	33K	J 1/10W	
R554			RK73FB2A682J	CHIP R	6.8K	J 1/10W	
R555,556			RK73FB2A101J	CHIP R	100	J 1/10W	
R557			RK73FB2A221J	CHIP R	220	J 1/10W	
R558			RK73FB2A101J	CHIP R	100	J 1/10W	
R559,560			RK73FB2A473J	CHIP R	47K	J 1/10W	
R561,562			RK73FB2A101J	CHIP R	100	J 1/10W	
R563			RK73FB2A102J	CHIP R	1.0K	J 1/10W	
R564			RK73FB2A681J	CHIP R	680	J 1/10W	
R565			RK73FB2A101J	CHIP R	100	J 1/10W	
R566			RK73FB2A471J	CHIP R	470	J 1/10W	
R567			RK73FB2A221J	CHIP R	220	J 1/10W	
R570,571			RK73FB2A222J	CHIP R	2.2K	J 1/10W	
R572			RK73FB2A272J	CHIP R	2.7K	J 1/10W	
R580-583			RK73FB2A223J	CHIP R	22K	J 1/10W	
R584			RK73FB2A101J	CHIP R	100	J 1/10W	
R586			RK73FB2A682J	CHIP R	6.8K	J 1/10W	
R587			RK73FB2A473J	CHIP R	47K	J 1/10W	
R588,589			RK73FB2A101J	CHIP R	100	J 1/10W	
R591			RK73FB2A682J	CHIP R	6.8K	J 1/10W	
R592			RK73FB2A473J	CHIP R	47K	J 1/10W	
R593,594			RK73FB2A101J	CHIP R	100	J 1/10W	
R596			RK73FB2A682J	CHIP R	6.8K	J 1/10W	
R597			RK73FB2A473J	CHIP R	47K	J 1/10W	
R598,599			RK73FB2A101J	CHIP R	100	J 1/10W	
R601			RK73FB2A682J	CHIP R	6.8K	J 1/10W	
R602			RK73FB2A473J	CHIP R	47K	J 1/10W	
R603			RK73FB2A101J	CHIP R	100	J 1/10W	
R604			RK73FB2A470J	CHIP R	47	J 1/10W	
R605			RK73FB2A392J	CHIP R	3.9K	J 1/10W	
R606			RK73FB2A103J	CHIP R	10K	J 1/10W	
R608			RK73FB2A471J	CHIP R	470	J 1/10W	
R609,610			RK73FB2A103J	CHIP R	10K	J 1/10W	
R611			RK73FB2A102J	CHIP R	1.0K	J 1/10W	

PARTS LSIT

RF UNIT (X44-3210-00)

Ref. No.	Address	New parts	Parts No.	Description	Destination
R612			RK73FB2A821J	CHIP R 820 J 1/10W	
R613			RK73FB2A271J	CHIP R 270 J 1/10W	
R614			RK73FB2A101J	CHIP R 100 J 1/10W	
R615			RK73FB2A220J	CHIP R 22 J 1/10W	
R616			RK73FB2A470J	CHIP R 47 J 1/10W	
R617			RK73FB2A392J	CHIP R 3.9K J 1/10W	
R618			RK73FB2A103J	CHIP R 10K J 1/10W	
R619			RK73FB2A220J	CHIP R 22 J 1/10W	
R620			RK73FB2A471J	CHIP R 470 J 1/10W	
R621			RK73FB2A183J	CHIP R 18K J 1/10W	
R622			RK73FB2A122J	CHIP R 1.2K J 1/10W	
R623			RK73FB2A102J	CHIP R 1.0K J 1/10W	
R624			RK73FB2A334J	CHIP R 330K J 1/10W	
R625			RK73FB2A182J	CHIP R 1.8K J 1/10W	
R626			RK73FB2A331J	CHIP R 330 J 1/10W	
R627			RK73FB2A102J	CHIP R 1.0K J 1/10W	
R628			RK73FB2A101J	CHIP R 100 J 1/10W	
R629			RK73FB2A821J	CHIP R 820 J 1/10W	
R630			RK73FB2A822J	CHIP R 8.2K J 1/10W	
R631			RK73FB2A103J	CHIP R 10K J 1/10W	
R632			RK73FB2A102J	CHIP R 1.0K J 1/10W	
R633			RK73FB2A181J	CHIP R 180 J 1/10W	
R634			RK73FB2A331J	CHIP R 330 J 1/10W	
R635			RK73FB2A823J	CHIP R 82K J 1/10W	
R636			RK73FB2A333J	CHIP R 33K J 1/10W	
R637			RK73FB2A101J	CHIP R 100 J 1/10W	
R638			RK73FB2A470J	CHIP R 47 J 1/10W	
R639			RK73FB2A682J	CHIP R 6.8K J 1/10W	
R640			RK73FB2A102J	CHIP R 1.0K J 1/10W	
R641			RK73FB2A151J	CHIP R 150 J 1/10W	
R642			RK73FB2A150J	CHIP R 15 J 1/10W	
R643			RK73FB2A471J	CHIP R 470 J 1/10W	
R644			RK73FB2A103J	CHIP R 10K J 1/10W	
R645			RK73FB2A392J	CHIP R 3.9K J 1/10W	
R646			RK73FB2A822J	CHIP R 8.2K J 1/10W	
R647			RK73FB2A102J	CHIP R 1.0K J 1/10W	
R648			RK73FB2A684J	CHIP R 680K J 1/10W	
R649			RK73FB2A182J	CHIP R 1.8K J 1/10W	
R650			RK73FB2A103J	CHIP R 10K J 1/10W	
R651			RK73FB2A472J	CHIP R 4.7K J 1/10W	
R652			RK73FB2A103J	CHIP R 10K J 1/10W	
R653			RK73FB2A104J	CHIP R 100K J 1/10W	
R655-656			RK73FB2A103J	CHIP R 10K J 1/10W	
R657			RK73FB2A471J	CHIP R 470 J 1/10W	
R658			RK73FB2A101J	CHIP R 100 J 1/10W	
R659			RK73FB2A470J	CHIP R 47 J 1/10W	
R690-697			RK73FB2A221J	CHIP R 220 J 1/10W	
R699			RK73FB2A102J	CHIP R 1.0K J 1/10W	
R710-712			RK73FB2A103J	CHIP R 10K J 1/10W	
R800			RK73FB2A223J	CHIP R 22K J 1/10W	
R801			RK73FB2A103J	CHIP R 10K J 1/10W	
R802			RK73FB2A222J	CHIP R 2.2K J 1/10W	
R803			RK73FB2A271J	CHIP R 270 J 1/10W	
R804			RK73FB2A101J	CHIP R 100 J 1/10W	
R901-902			RK73FB2A101J	CHIP R 100 J 1/10W	
R903-906			RK73FB2A101J	CHIP R 100 J 1/10W	
R908-920			RK73FB2A101J	CHIP R 100 J 1/10W	
R925-928			RK73EB2B221J	CHIP R 220 J 1/8W	
VR2			R12-6417-05	TRIMMING POT. 1K	

Ref. No.	Address	New parts	Parts No.	Description	Destination
VR3			R12-6427-05	TRIMMING POT. 47K	
VR901-904		*	R31-0605-05	VARIABLE RESISTOR 100K	
VR905,906		*	R31-0606-05	VARIABLE RESISTOR 10K	
K1-3			S51-1428-05	RELAY	
K4			S51-1420-05	RELAY	
S800			S31-2420-05	SLIDE SWITCH	
D1-3			LFB01	DIODE	
D4-7			RLS245	DIODE	
D8			1SV128	DIODE	
D10			LFB01	DIODE	
D11			1SV128	DIODE	
D12			RLS135	DIODE	
D13			1SV128	DIODE	
D14			RLS135	DIODE	
D15			1SV128	DIODE	
D16			RLS135	DIODE	
D17			1SV128	DIODE	
D18			RLS135	DIODE	
D19			1SV128	DIODE	
D20			RLS135	DIODE	
D21			1SV128	DIODE	
D22			RLS135	DIODE	
D23			1SV128	DIODE	
D24			RLS135	DIODE	
D25			1SV128	DIODE	
D26			RLS135	DIODE	
D27			1SV128	DIODE	
D28			RLS135	DIODE	
D29			1SV128	DIODE	
D30			RLS135	DIODE	
D31			1SV128	DIODE	
D32			RLS135	DIODE	
D33			1SV128	DIODE	
D35			RLS135	DIODE	
D36			1SV128	DIODE	
D37			RLS135	DIODE	
D38,39			1SV128	DIODE	
D40			RLS135	DIODE	
D41			1SV128	DIODE	
D42,43			DAN235K	DIODE	
D46			HSM88ASR	DIODE	
D47			LFB01	DIODE	
D49			1SV172	DIODE	
D50			RD6.2M(B1)	ZENER DIODE	
D51			B30-2004-05	LED	
D52			RD12M(B2)	ZENER DIODE	
D53,54			1SS355	DIODE	
D55			RD3.0M(B2)	ZENER DIODE	
D56			1SS355	DIODE	
D57			B30-2004-05	LED	
D58			LFB01	DIODE	
D59			1SS355	DIODE	
D60,61			DAN202K	DIODE	
D62-69			1SV128	DIODE	
D70			RD6 2M(B1)	ZENER DIODE	
D71			RD4.7M(B2)	ZENER DIODE	
D72			1SS355	DIODE	
D500			1SV166	DIODE	

PARTS LIST

RF UNIT (X44-3210-00)
FINAL UNIT (X45-351X-XX)

Ref. No.	Address	New parts	Parts No.	Description	Destination
D501			RLS73	DIODE	
D502			1SV166	DIODE	
D503			RLS73	DIODE	
D504			1SV166	DIODE	
D505			RLS73	DIODE	
D506			1SV166	DIODE	
D507			RLS73	DIODE	
D508			1SS181	DIODE	
IC1,2			TC9174F	IC (CMOS I/O EXTENSION)	
IC6			NJM2904M	IC (OP AMP X2)	
IC7			M62363FP	IC (8bit D/A CONVERTER)	
IC8			NJM2902M	IC (OP AMP X4)	
IC9			NJM2903M	IC (COMPARATOR X2)	
IC10			NJM78L05UA	IC (VOLTAGE REGULATOR/ +5V)	
IC500-502			F71022	IC (DDS)	
IC503			UPD74HC390G	IC (DUAL DECADE COUNTER)	
IC505,506			SN16913P	IC (DUBLE BALANCED MIXERS)	
IC507			MB86001PF	IC	
IC508			SN76514N	IC (MIXER)	
IC509			MB86001PF	IC	
IC510			TA78L09F	IC (VOLTAGE REGULATOR/ +9V)	
IC511		*	TA78DS09F	IC	
PL1,2		*	B30-2134-05	LAMP	
Q1			DTA124EK	DIGITAL TRANSISTOR	
Q2			DTC124EK	DIGITAL TRANSISTOR	
Q3			FMA1	TRANSISTOR	
Q5			2SC2954	TRANSISTOR	
Q6			2SC2712(Y)	TRANSISTOR	
Q7-12			FMG4	TRANSISTOR	
Q13			3SK131(M)	FET	
Q14 15		*	2SK2218(5)	FET	
Q16			2SC2954	TRANSISTOR	
Q17-20			2SK520(K44)	FET	
Q21			2SD1624(S)	TRANSISTOR	
Q22			2SC2714(Y)	TRANSISTOR	
Q23,24			3SK131(M)	FET	
Q26,27			2SK520(K43)	FET	
Q28-32			2SC2712(Y)	TRANSISTOR	
Q33			3SK131(M)	FET	
Q35,36			3SK184(R)	FET	
Q37-39			3SK131(M)	FET	
Q42			DTC124EK	DIGITAL TRANSISTOR	
Q43,44			2SC2712(Y)	TRANSISTOR	
Q45,46			DTC143TK	DIGITAL TRANSISTOR	
Q47			2SC2712(Y)	TRANSISTOR	
Q48			DTA124EK	DIGITAL TRANSISTOR	
Q49			2SC2712(Y)	TRANSISTOR	
Q50			2SK208(Y)	FET	
Q51			DTC124EK	DIGITAL TRANSISTOR	
Q52			2SC2712(Y)	TRANSISTOR	
Q54			2SC2712(Y)	TRANSISTOR	
Q55			2SB1188(Q,R)	TRANSISTOR	
Q56			DTC124EK	DIGITAL TRANSISTOR	
Q57,58			2SB1188(Q,R)	TRANSISTOR	
Q59,60			DTC143EK	DIGITAL TRANSISTOR	
Q61			FMC3	TRANSISTOR	
Q62			DTA143EK	DIGITAL TRANSISTOR	
Q63			FMC3	TRANSISTOR	
Q64			DTA143EK	DIGITAL TRANSISTOR	

Ref. No.	Address	New parts	Parts No.	Description	Destination
Q65			2SA1162(Y)	TRANSISTOR	
Q66			DTC114EK	DIGITAL TRANSISTOR	
Q70			DTC114EK	DIGITAL TRANSISTOR	
Q71			DTA114EK	DIGITAL TRANSISTOR	
Q500-503			2SC2712(Y)	TRANSISTOR	
Q504,505			2SK508NV(K53)	FET	
Q506-508			2SC2712(Y)	TRANSISTOR	
Q510,511			2SC2712(Y)	TRANSISTOR	
Q512-514			2SC2714(Y)	TRANSISTOR	
Q515			2SC2712(Y)	TRANSISTOR	
Q516-519			DTC114EK	DIGITAL TRANSISTOR	
Q520-523			2SK508NV(K53)	FET	
Q524,525			2SC2714(Y)	TRANSISTOR	
Q526			2SC2996(Y,O)	TRANSISTOR	
Q527-529			2SC3722K(R)	TRANSISTOR	
Q530			2SC2712(Y)	TRANSISTOR	
Q531			2SC2714(Y)	TRANSISTOR	
Q532			2SC2954	TRANSISTOR	
Q533			DTA124EK	DIGITAL TRANSISTOR	
Q534-536			2SC3722K(R)	TRANSISTOR	
Q537			2SD1757K	TRANSISTOR	
Q539			2SC2714(Y)	TRANSISTOR	
Q800			2SC2714(Y)	TRANSISTOR	
TH1			157-101-53019	THERMISTOR 100	
TH2			157-302-53008	THERMISTOR 3K	
TH3			157-101-53019	THERMISTOR 100	
TH4			157-302-53008	THERMISTOR 3K	
S901,902			W02-1687-15	ENCODER (FILTER)	
S903		*	W02-1861-05	ENCODER (RIT/XIT)	
S904			W02-1660-15	ENCODER (M.CH/VFO.CH)	
A501	2F		X58-3390-03	SUB UNIT (VCO2)	

FINAL UNIT (X45-351X-XX) 0-00 : K,P,M,M2,X 2-71 : E,E2,E3,E9

C1			CK73FF1H473Z	CHIP C	0.047UF	Z
C2			CC73FCH1H101J	CHIP C	100PF	J
C3			CC45FCH2H030C	CERAMIC	3.0PF	C
C4			CC73FCH1H560J	CHIP C	56PF	J
C5			CK73FF1H473Z	CHIP C	0.047UF	Z
C6			CE04EW1H010M	ELECTRO	1.0UF	50WV
C7			CK73FB1H103K	CHIP C	0.010UF	K
C8-18			CK73FB1H102K	CHIP C	1000PF	K
C19-33			CK73FB1H103K	CHIP C	0.010UF	K
C101			CM93D2H102J	MICA	1000PF	J
C102			CC45FSL2H331J	CERAMIC	330PF	J
C103			CC45FSL2H271J	CERAMIC	270PF	J
C104,105			CM93D2H102J	MICA	1000PF	J
C106			CC45FSL2H151J	CERAMIC	150PF	J
C107			CM93D2H222J	MICA	2200PF	J
C108		*	CC45FSL2H181J	CERAMIC	180PF	J
C109			CC45FSL2H101J	CERAMIC	100PF	J
C110			CM93D2H102J	MICA	1000PF	J
C111			CM93D2H561J	MICA	560PF	J
C112			CC45FSL2H471J	CERAMIC	470PF	J
C113,114		*	CC45FSL2H181J	CERAMIC	180PF	J
C115			CC45FSL2H391J	CERAMIC	390PF	J
C116			CC45FSL2H471J	CERAMIC	470PF	J

PARTS LSIT

FINAL UNIT (X45-351X-XX)

Ref. No.	Address	New parts	Parts No.	Description			Destination
C117			CC45FSL2H271J	CERAMIC	270PF	J	
C118			CC45FSL2H391J	CERAMIC	390PF	J	
C119			CC45FSL2H471J	CERAMIC	470PF	J	
C120		*	CC45FSL2H181J	CERAMIC	180PF	J	
C121			CC45FSL2H331J	CERAMIC	330PF	J	
C122			CC45FSL2H820J	CERAMIC	82PF	J	
C123			CC45FSL2H331J	CERAMIC	330PF	J	
C124			CC45FSL2H121J	CERAMIC	120PF	J	
C125			CC45FSL2H270J	CERAMIC	27PF	J	
C126			CC45FSL2H151J	CERAMIC	150PF	J	
C127			CC45FSL2H471J	CERAMIC	470PF	J	
C128			CC45FSL2H270J	CERAMIC	27PF	J	
C129			CC45FSL2H220J	CERAMIC	22PF	J	
C130			CC45FSL2H331J	CERAMIC	330PF	J	
C131			CC45FSL2H471J	CERAMIC	470PF	J	
C132			CC45FSL2H680J	CERAMIC	68PF	J	
C133			CC45FSL2H560J	CERAMIC	56PF	J	
C134			CC45FSL2H151J	CERAMIC	150PF	J	
C135			CC45FSL2H471J	CERAMIC	470PF	J	
C136			CC45FSL2H560J	CERAMIC	56PF	J	
C137			CC45FSL2H151J	CERAMIC	150PF	J	
C138			CC45FSL2H331J	CERAMIC	330PF	J	
C139			CC45FSL2H330J	CERAMIC	33PF	J	
C140,141			CC45FSL2H221J	CERAMIC	220PF	J	
C142			CC45FSL2H101J	CERAMIC	100PF	J	
C143,144			CC45FSL2H151J	CERAMIC	150PF	J	
C145			CC45FSL2H120J	CERAMIC	12PF	J	
C146			CC45FSL2H271J	CERAMIC	270PF	J	
C147			CC45FSL2H390J	CERAMIC	39PF	J	
C148,149			CC45FSL2H820J	CERAMIC	82PF	J	
C150			CC45FSL2H100D	CERAMIC	10PF	D	
C151			CC45FSL2H121J	CERAMIC	120PF	J	
C152			CC45FSL2H470J	CERAMIC	47PF	J	
C153			CC45FSL2H330J	CERAMIC	33PF	J	
C154			CC45FSL2H820J	CERAMIC	82PF	J	
C161			CC45FSL2H100D	CERAMIC	10PF	D	
C162		*	CC45FSL2H090D	CERAMIC	9.0PF	D	
C163			CC45FSL2H270J	CERAMIC	27PF	J	
C301,302			CK73FB1H103K	CHIP C	0.010UF	K	
C304			CC73FCH1H101J	CHIP C	100PF	J	
C305			CC73FCH1H181J	CHIP C	180PF	J	
C306			CC73FCH1H390J	CHIP C	39PF	J	
C401			CE04EW1C470M	ELECTRO	47UF	16WV	
C402			CE04EW1C100M	ELECTRO	10UF	16WV	
C405			CE04EW1E470M	ELECTRO	47UF	25WV	
C406,407			CK73FB1E104K	CHIP C	0.10UF	K	
C408			CE04EW1E470M	ELECTRO	47UF	25WV	
C409			CK73FB1E104K	CHIP C	0.10UF	K	
C410			CE04EW1C470M	ELECTRO	47UF	16WV	
C411			CK73FB1H103K	CHIP C	0.010UF	K	
C412,413			CK73FB1H222K	CHIP C	2200PF	K	
C414			CE04EW1C330M	ELECTRO	33UF	16WV	
C415,416			CE04EW1C101M	ELECTRO	100UF	16WV	
C417			CK73FB1H103K	CHIP C	0.010UF	K	
C418-420			CK73FB1H102K	CHIP C	1000PF	K	
C421			CK73FB1H103K	CHIP C	0.010UF	K	
C422			CE04EW1E470M	ELECTRO	47UF	25WV	
C431-433			CK73FB1H103K	CHIP C	0.010UF	K	
C435			CK73FB1E104K	CHIP C	0.10UF	K	

Ref. No.	Address	New parts	Parts No.	Description			Destination
C436			CK73FB1H102K	CHIP C	1000PF	K	
C437			CK73FB1H103K	CHIP C	0.010UF	K	
C438			CE04EW1H010M	ELECTRO	1.0UF	50WV	
C439			CK73FB1H103K	CHIP C	0.010UF	K	
C450			CK73FB1H103K	CHIP C	0.010UF	K	
C452-454			CK73FB1H103K	CHIP C	0.010UF	K	
C455			CK73FB1H102K	CHIP C	1000PF	K	
C456-458			CK73FB1H103K	CHIP C	0.010UF	K	
C461			CC73FSL1H221J	CHIP C	220PF	J	
C465			CK73FB1E104K	CHIP C	0.10UF	K	
C466-471			CK73FF1C105Z	CHIP C	1.0UF	Z	
C472,473			CK73FB1E104K	CHIP C	0.10UF	K	
C479			CE04EW1H010M	ELECTRO	1.0UF	50WV	
C480-485			CK73FB1H103K	CHIP C	0.010UF	K	
C486-488			CK73FB1E104K	CHIP C	0.10UF	K	
C489			CC73FCH1H470J	CHIP C	47PF	J	
C490,491			CK73FB1H103K	CHIP C	0.010UF	K	
C492			CK73FB1E104K	CHIP C	0.10UF	K	
C493			CK73FB1H103K	CHIP C	0.010UF	K	
C494-496			CK73FB1E104K	CHIP C	0.10UF	K	
C497-499			CK73FB1H103K	CHIP C	0.010UF	K	
C502			CK73FB1E473K	CHIP C	0.047UF	K	
C503			CK73FB1H102K	CHIP C	1000PF	K	
C504,505			CK73FB1E473K	CHIP C	0.047UF	K	
C506			CK73FB1E223K	CHIP C	0.022UF	K	
C507			CK73FB1H681K	CHIP C	680PF	K	
C508,509			CK73FB1E473K	CHIP C	0.047UF	K	
C510,511			CK73FB1E223K	CHIP C	0.022UF	K	
C512			CE04EW1C100M	ELECTRO	10UF	16WV	
C513			CC45FSL2H151J	CERAMIC	150PF	J	
C514,515			CK73FB1E223K	CHIP C	0.022UF	K	
C516			CE04EW1E101M	ELECTRO	100UF	25WV	
C517			CM93D2H681J	MICA	680PF	J	
C518,519			C91-1004-05	CHIP C	6800PF	J	
C520			CK73FB1H102K	CHIP C	1000PF	K	
C521			CK73FB1E473K	CHIP C	0.047UF	K	
C522			CE04EW1C100M	ELECTRO	10UF	16WV	
C523			CK73FB1E223K	CHIP C	0.022UF	K	
C524			CE04EW1E470M	ELECTRO	47UF	25WV	
C525			CM73F2H122J	CHIP C	1200PF	J	
C526			CC45FSL2H151J	CERAMIC	150PF	J	
C527			CE04EW1E101M	ELECTRO	100UF	25WV	
C528,529			CK73FB1E104K	CHIP C	0.10UF	K	
C533			CM73F2H561J	CHIP C	560PF	J	
C550			CK73FB1E104K	CHIP C	0.10UF	K	
C551			CK73FB1H103K	CHIP C	0.010UF	K	
C552,553			CK73FB1H102K	CHIP C	1000PF	K	
C554			CK73FB1H223K	CHIP C	0.022UF	K	
C557			CK73FB1H102K	CHIP C	1000PF	K	
C558			CK73FB1H103K	CHIP C	0.010UF	K	
C559			CK73FB1E104K	CHIP C	0.10UF	K	
C560-563		*	C91-1171-05	HV C	0.01UF	1KWV	
C601			CK73FB1H103K	CHIP C	0.010UF	K	
C602			CE04EW1E102M	ELECTRO	1000UF	25WV	
C603			CK73FB1H103K	CHIP C	0.010UF	K	
C605,606			CK73FB1H103K	CHIP C	0.010UF	K	
C608,609			CK73FB1E104K	CHIP C	0.10UF	K	
C610,611			CK73FB1E473K	CHIP C	0.047UF	K	
C612,613			CE04EW1E470M	ELECTRO	47UF	25WV	

PARTS LIST

FINAL UNIT (X45-351X-XX)

Ref. No.	Address	New parts	Parts No.	Description	Destination
C614			CE04EW1E102M	ELECTRO 1000UF 25WV	
C620			CK73FF1E104Z	CHIP C 0.10UF Z	
C621,622			CE04EW1E470M	ELECTRO 47UF 25WV	
C623			CK73FF1E104Z	CHIP C 0.10UF Z	
C701-711			CK73FB1H103K	CHIP C 0.010UF K	
C712			CE04EW1C471M	ELECTRO 470UF 16WV	
C713			CK73FB1E103K	CHIP C 0.010UF K	
C901			CK73FB1H103K	CHIP C 0.010UF K	
C903			CE04EW1H2R2M	ELECTRO 2.2UF 50WV	
TC1			C05-0030-15	TRIMMER CAPACITOR 20PF	
CN1,2			E04-0191-05	RF COAXIAL CABLE SOCKET	
CN3			E40-5469-05	FLAT CABLE CONNECTOR (12P)	
CN4			E40-5068-05	PIN CONNECTOR (11P)	
CN5			E23-0996-05	TERMINAL (TEST)	
CN301			E40-3238-05	PIN CONNECTOR (3P)	
CN302-305			E04-0191-05	RF COAXIAL CABLE SOCKET	
CN306,307			E23-0996-05	TERMINAL (TEST)	
CN401			E23-5745-05	FLAT CABLE CONNECTOR (20P)	
CN402			E40-5469-05	FLAT CABLE CONNECTOR (12P)	
CN403			E40-3242-05	PIN CONNECTOR (7P)	
CN404			E40-3237-05	PIN CONNECTOR (2P)	
CN405			E40-3239-05	PIN CONNECTOR (4P)	
CN406			E40-5470-05	FLAT CABLE CONNECTOR (13P)	
CN407			E40-3240-05	PIN CONNECTOR (5P)	
CN410			E04-0154-05	RF COAXIAL CABLE SOCKET	
CN411			E40-3239-05	PIN CONNECTOR (4P)	
CN412			E04-0154-05	RF COAXIAL CABLE SOCKET	
CN413			E40-3238-05	PIN CONNECTOR (3P)	
CN501,502			E04-0191-05	RF COAXIAL CABLE SOCKET	
CN503			E40-3240-05	PIN CONNECTOR (5P)	
CN504			E40-3238-05	PIN CONNECTOR (3P)	
CN505-507			E23-0996-05	TERMINAL (TEST)	
CN601			E40-3238-05	PIN CONNECTOR (3P)	
CN602			E40-3239-05	PIN CONNECTOR (4P)	
CN603			E40-5470-05	FLAT CABLE CONNECTOR (13P)	
CN604			E40-3240-05	PIN CONNECTOR (5P)	
CN605			E40-3237-05	PIN CONNECTOR (2P)	
W1	1J,2K	*	E37-0539-05	LEAD WIRE WITH CONNECTOR	
W501	1J,2J	*	E37-0525-05	LEAD WIRE WITH TERMINALR	
W502	2J		E37-0067-05	LEAD WIRE WITH MINIPIN PLUG	
202	2G		F29-0014-05	INSULATING BUSH	
F401			F06-4029-05	FUSE (4A 250V) : C/5	
F601			F53-0093-05	FUSE (5A 125V) : D/5	
A401,402			J13-0075-05	FUSE CLIP : C/5	
CF451			L72-0319-05	CERAMIC FILTER (455KHZ)	
CF452	—		L72-0333-05	CERAMIC FILTER (455KHZ)	
CF453			L72-0366-05	CERAMIC FILTER (455KHZ)	
L1			L40-2221-33	SMALL FIXED INDUCTOR	
L2			L39-0480-15	TROIDAL COIL	
L3			L40-2221-33	SMALL FIXED INDUCTOR	
L4-10			L40-1015-48	SMALL FIXED INDUCTOR (100UH)	
L101			L39-0491-05	TROIDAL COIL (CORE : L92-0107-05)	
L102			L39-0492-05	TROIDAL COIL (CORE : L92-0107-05)	
L103			L39-0493-05	TROIDAL COIL (CORE : L92-0107-05)	
L104			L39-1223-05	TROIDAL COIL (CORE : L92-0107-05)	
L105			L39-1224-05	TROIDAL COIL (CORE : L92-0107-05)	
L106			L39-1225-05	TROIDAL COIL (CORE : L92-0107-05)	
L107			L39-1222-05	TROIDAL COIL (CORE : L92-0107-05)	

Ref. No.	Address	New parts	Parts No.	Description	Destination
L108			L39-1223-05	TROIDAL COIL (CORE : L92-0107-05)	
L109,110			L39-1221-05	TROIDAL COIL (CORE : L92-0108-05)	
L111			L34-1279-05	COIL	
L112			L34-1281-05	COIL	
L113			L34-1279-05	COIL	
L114			L34-1280-05	COIL	
L115			L34-1281-05	COIL	
L116			L34-1282-05	COIL	
L301,302			L40-1015-48	SMALL FIXED INDUCTOR (100UH)	
L303,304			L34-1035-05	COIL	
L401			L40-1015-48	SMALL FIXED INDUCTOR (100UH)	
L450			L40-2215-48	SMALL FIXED INDUCTOR (220UH)	
L451			L34-0943-05	COIL	
L452			L34-4255-05	COIL	
L453		*	L40-4711-15	SMALL FIXED INDUCTOR	
L454			L40-2221-33	SMALL FIXED INDUCTOR	
L455,456			L34-4254-05	COIL	
L457,458			L34-4255-05	COIL	
L460			L40-3395-48	SMALL FIXED INDUCTOR (3.3UH)	
L461-465			L40-1092-12	SMALL FIXED INDUCTOR	
L466			L40-1592-15	SMALL FIXED INDUCTOR	
L501		*	L40-1505-48	SMALL FIXED INDUCTOR (15UH)	
L502			L40-3395-48	SMALL FIXED INDUCTOR (3.3UH)	
L503			L39-0481-05	TROIDAL COIL	
L504			L33-0617-15	CHOKE COIL	
L505,506			L33-0699-05	CHOKE COIL	
L507			L39-1257-05	TROIDAL COIL	
L508,509			L33-0617-15	CHOKE COIL	
L510			L39-0482-05	TROIDAL COIL	
L511			L33-0651-05	CHOKE COIL	
L512			L33-0617-15	CHOKE COIL	
L513			L39-1209-25	TROIDAL COIL	
L514		*	L40-1505-48	SMALL FIXED INDUCTOR (15UH)	
L515,516		*	L92-0150-05	TROIDAL CORE (W501)	
L520			L40-3985-48	SMALL FIXED INDUCTOR (390NH)	
L601			L40-1005-48	SMALL FIXED INDUCTOR (10UH)	
L602			L40-1092-12	SMALL FIXED INDUCTOR	
R	2G,2H		N67-3010-46	PAN HEAD SEMS SCREW	
K	2G,2H		N87-3006-46	BRAZIER HEAD TAPTITE SCREW	
R1			RK73FB2A100J	CHIP R 10 J 1/10W	
R2-5			RK73FB2A330J	CHIP R 33 J 1/10W	
R6-9			RK73FB2A270J	CHIP R 27 J 1/10W	
R10			RK73FB2A181J	CHIP R 180 J 1/10W	
R11-13			RK73FB2A101J	CHIP R 100 J 1/10W	
R14			RK73FB2A473J	CHIP R 47K J 1/10W	
R15			RK73FB2A103J	CHIP R 10K J 1/10W	
R20			RK73FB2A393J	CHIP R 39K J 1/10W	
R21			RK73FB2A223J	CHIP R 22K J 1/10W	
R22			RK73FB2A104J	CHIP R 100K J 1/10W	
R301-304			RK73FB2A104J	CHIP R 100K J 1/10W	
R305			RK73FB2A473J	CHIP R 47K J 1/10W	
R401			RK73FB2A100J	CHIP R 10 J 1/10W	
R402			RK73FB2A272J	CHIP R 2.7K J 1/10W	
R403,404			RK73FB2A273J	CHIP R 27K J 1/10W	
R405			RK73FB2A473J	CHIP R 47K J 1/10W	
R406			RK73FB2A150J	CHIP R 15 J 1/10W	
R407			RK73FB2A221J	CHIP R 220 J 1/10W	
R408			RK73FB2A101J	CHIP R 100 J 1/10W	

PARTS LSIT

FINAL UNIT (X45-351X-XX)

Ref. No.	Address	New parts	Parts No.	Description	Destination
R409,410			R92-1332-05	CHIP R 160 J 1W	
R411			RK73FB2A182J	CHIP R 1.8K J 1/10W	
R415			RK73FB2A101J	CHIP R 100 J 1/10W	
R416			RK73FB2A220J	CHIP R 22 J 1/10W	
R417			RK73FB2A101J	CHIP R 100 J 1/10W	
R418			RK73FB2A102J	CHIP R 1.0K J 1/10W	
R419			RK73FB2A104J	CHIP R 100K J 1/10W	
R420			RK73FB2A102J	CHIP R 1.0K J 1/10W	
R421			RK73FB2A393J	CHIP R 39K J 1/10W	
R422			RK73FB2A220J	CHIP R 22 J 1/10W	
R423,424			RK73FB2A331J	CHIP R 330 J 1/10W	
R425			RK73FB2A220J	CHIP R 22 J 1/10W	
R426			RK73FB2A103J	CHIP R 10K J 1/10W	
R427			RK73FB2A102J	CHIP R 1.0K J 1/10W	
R428			RK73FB2A222J	CHIP R 2.2K J 1/10W	
R429			RK73FB2A102J	CHIP R 1.0K J 1/10W	
R439			RK73FB2A470J	CHIP R 47 J 1/10W	
R440			RK73FB2A152J	CHIP R 1.5K J 1/10W	
R441,442			RK73FB2A332J	CHIP R 3.3K J 1/10W	
R443,444			RK73FB2A101J	CHIP R 100 J 1/10W	
R445,446			RK73FB2A472J	CHIP R 4.7K J 1/10W	
R447,448			RK73FB2A101J	CHIP R 100 J 1/10W	
R449,450			RK73FB2A222J	CHIP R 2.2K J 1/10W	
R451,452			RK73FB2A101J	CHIP R 100 J 1/10W	
R453			RK73FB2A152J	CHIP R 1.5K J 1/10W	
R454,455			RK73FB2A332J	CHIP R 3.3K J 1/10W	
R456			RK73FB2A333J	CHIP R 33K J 1/10W	
R457,458			RK73FB2A104J	CHIP R 100K J 1/10W	
R459			RK73FB2A471J	CHIP R 470 J 1/10W	
R460			RK73FB2A220J	CHIP R 22 J 1/10W	
R461			RK73FB2A102J	CHIP R 1.0K J 1/10W	
R462			RK73FB2A101J	CHIP R 100 J 1/10W	
R463,464			RK73FB2A151J	CHIP R 150 J 1/10W	
R465,466			RK73FB2A471J	CHIP R 470 J 1/10W	
R467-470			RK73FB2A330J	CHIP R 33 J 1/10W	
R471			RK73FB2A102J	CHIP R 1.0K J 1/10W	
R472			RK73FB2A104J	CHIP R 100K J 1/10W	
R473			RK73FB2A473J	CHIP R 47K J 1/10W	
R474			RK73FB2A104J	CHIP R 100K J 1/10W	
R475			RK73FB2A473J	CHIP R 47K J 1/10W	
R476			RK73FB2A472J	CHIP R 4.7K J 1/10W	
R480			RK73FB2A470J	CHIP R 47 J 1/10W	
R481			RK73FB2A471J	CHIP R 470 J 1/10W	
R482			RK73FB2A330J	CHIP R 33 J 1/10W	
R483			RK73FB2A221J	CHIP R 220 J 1/10W	
R484			RK73FB2A223J	CHIP R 22K J 1/10W	
R485			RK73FB2A822J	CHIP R 8.2K J 1/10W	
R486			RK73FB2A560J	CHIP R 56 J 1/10W	
R487-489			RK73FB2A223J	CHIP R 22K J 1/10W	
R490			RK73FB2A681J	CHIP R 680 J 1/10W	
R491,492			RK73FB2A471J	CHIP R 470 J 1/10W	
R501			RK73FB2A101J	CHIP R 100 J 1/10W	
R502			RK73FB2A331J	CHIP R 330 J 1/10W	
R503			RK73FB2A681J	CHIP R 680 J 1/10W	
R504			RK73FB2A331J	CHIP R 330 J 1/10W	
R505,506			RK73FB2A6R8J	CHIP R 6.8 J 1/10W	
R507			RK73FB2A681J	CHIP R 680 J 1/10W	
R508,509			R92-0696-05	CHIP R 33 J 1/4W	
R510			RK73FB2A331J	CHIP R 330 J 1/10W	

Ref. No.	Address	New parts	Parts No.	Description	Destination
R511			RK73FB2A151J	CHIP R 150 J 1/10W	
R512,513			R92-1318-05	CHIP R 100 J 1W	
R514-517			RS14DB3A5R6J	FL-PROOF RS 5.6 J 1W	
R518,519			RS14DB3A150J	FL-PROOF RS 15 J 1W	
R520			RK73FB2A561J	CHIP R 560 J 1/10W	
R521,522			RS14DB3A5R6J	FL-PROOF RS 5.6 J 1W	
R530		*	R92-2543-05	FIXED RESISTOR 6.8 1/2W	
R601			RK73FB2A472J	CHIP R 4.7K J 1/10W	
R701			RK73FB2A103J	CHIP R 10K J 1/10W	
R702			RK73FB2A101J	CHIP R 100 J 1/10W	
R703-705			RK73FB2A562J	CHIP R 5.6K J 1/10W	
R706			RK73FB2A472J	CHIP R 4.7K J 1/10W	
R707			RK73FB2A821J	CHIP R 820 J 1/10W	
R708			RK73FB2A272J	CHIP R 2.7K J 1/10W	
R709			RK73FB2A333J	CHIP R 33K J 1/10W	
R710			R92-1282-05	CHIP R 10 J 1W	
R712			R92-1316-05	CHIP R 39 J 1W	
R713			RK73FB2A471J	CHIP R 470 J 1/10W	
R714			RK73FB2A153J	CHIP R 15K J 1/10W	
VR1			R12-6730-05	TRIMMING POT. 220	
VR501,502			R12-6734-05	TRIMMING POT. 1K	
W301			R92-0150-05	JUMPER REST 0 OHM (ANT1)	
W303			R92-0150-05	JUMPER REST 0 OHM (ANT2)	
K1-14			S51-1420-05	RELAY	
K301			S51-2417-05	RELAY	
K302			S51-1429-05	RELAY	
K601			S51-2423-05	RELAY	
D1,2			1SS101	DIODE	
D3			RLZJ5.1B	ZENER DIODE	
D4-10			LFB01	DIODE	
D11			DAP202K	DIODE	
D301,302			DSA301LA	DIODE	
D303,304			LFB01	DIODE	
D401			1SS226	DIODE	
D402		*	RD9.1M(B2)	ZENER DIODE	
D450			DAN235K	DIODE	
D451-456			1SV128	DIODE	
D457			DAN235K	DIODE	
D501			MA27T-B	DIODE	
D502,503			SV03YS	DIODE	
D504			SG-5L(R)	DIODE	
D601			LFB01	DIODE	
D701			DAN202K	DIODE	
D702			LFB01	DIODE	
IC1			TC9174F	IC (CMOS I/O EXTENSION)	
IC402			UPC7805H	IC (VOLTAGE REGULATOR/ +5V)	
IC601,602			UPC7808H	IC (VOLTAGE REGULATOR/ +8V)	
IC701			NJM2904M	IC (OP AMP X2)	
Q1-4			FMA7	TRANSISTOR	
Q5			DTC114EK	DIGITAL TRANSISTOR	
Q6			FMC2	TRANSISTOR	
Q10-16			DTB143EK	DIGITAL TRANSISTOR	
Q401			2SA1162(Y)	TRANSISTOR	
Q402,403			2SC2712(Y)	TRANSISTOR	
Q404			2SD1624(S)	TRANSISTOR	
Q405			2SD1406(Y)	TRANSISTOR	
Q460,461			3SK131(M)	FET	
Q470,471			3SK131(M)	FET	

PARTS LIST

FINAL UNIT (X45-351X-XX)
AT UNIT (X53-3340-02)

Ref. No.	Address	New parts	Parts No.	Description	Destination
Q472			2SC2712(Y)	TRANSISTOR	
Q475			3SK131(M)	FET	
Q501			2SC1971	TRANSISTOR	
Q502,503			2SC3133	TRANSISTOR	
Q504			2SD1406(Y)	TRANSISTOR	
Q505,506			2SC2879	TRANSISTOR	
Q507			2SD1406(Y)	TRANSISTOR	
Q601			DTC143TK	DIGITAL TRANSISTOR	
Q701			DTC114TK	DIGITAL TRANSISTOR	
Q702,703			DTD114EK	DIGITAL TRANSISTOR	
TH452			157-502-53002	THERMISTOR 5K	
TH701			5TP-41S	THERMISTOR	

AT UNIT (X53-3340-02)

C1			CC45FSL2H330J	CERAMIC	33PF	J
C2-8			CK73FB1E103K	CHIP C	0.010UF	K
C9,10			CK73FB1H102K	CHIP C	1000PF	K
C11			CK73FB1E103K	CHIP C	0.010UF	K
C12			CE04EW1C470M	ELECTRO	47UF	16WV
C13-15			CK73FB1E103K	CHIP C	0.010UF	K
C16			CK73EF1E474Z	CHIP C	0.47UF	Z
C17-19			CK73FB1E103K	CHIP C	0.010UF	K
C20			CE04EW1C101M	ELECTRO	100UF	16WV
C21-23			CK73FB1E103K	CHIP C	0.010UF	K
C24			CK73EF1E474Z	CHIP C	0.47UF	Z
C25			CK73FB1E103K	CHIP C	0.010UF	K
C26			CE04EW1C101M	ELECTRO	100UF	16WV
C27-37			CK73FB1E103K	CHIP C	0.010UF	K
C38			CK73FB1H103K	CHIP C	0.010UF	K
C101-103			CK73FB1H103K	CHIP C	0.010UF	K
C105-108			CK73FB1H103K	CHIP C	0.010UF	K
TC1			C05-0031-15	TRIMMER CAPACITOR	10PF	
VC1,2	2E		C02-0023-05	VARIABLE CAPACITOR	300PF	
A5	3L		D40-0633-15	GEAR ASSY		
CN1,2			E04-0157-05	RF COAXIAL CABLE SOCKET		
CN3			E40-3239-05	PIN CONNECTOR (4P)		
CN4			E40-3240-05	PIN CONNECTOR (5P)		
CN5			E40-3238-05	PIN CONNECTOR (3P)		
CN6			E40-3237-05	PIN CONNECTOR (2P)		
CN7			E40-5068-05	PIN CONNECTOR (11P)		
CN101			E40-5066-05	PIN CONNECTOR (9P)		
–			F20-1081-04	INSULATING SHEET		
A1	2M		F11-1142-22	SHIELDING CASE		
A2	2M		F10-1401-23	SHIELDING PLATE		
A3	1M		F11-1143-14	SHIELDING COVER		
A4	2M		F11-1144-14	SHIELDING COVER		
A6	1M	*	F10-2192-04	SHIELDING COVER		
–			J61-0307-05	BAND		
L1			L39-0496-05	COIL		
L2			L39-0415-25	COIL		
L3-6			L40-1011-13	SMALL FIXED INDUCTOR		
L7-11			L40-1011-14	SMALL FIXED INDUCTOR		
L12-14			L40-1011-13	SMALL FIXED INDUCTOR		
L101-103			L40-1011-14	SMALL FIXED INDUCTOR		

Ref. No.	Address	New parts	Parts No.	Description	Destination
L105-108			L40-1011-14	SMALL FIXED INDUCTOR	
L109			L34-1276-15	COIL	
L110			L39-0479-05	COIL	
L111			L39-0495-05	COIL	
L112			L39-0494-15	COIL	
T110-112			L92-0117-05	TROIDAL CORE	
K	1M,2M		N87-3006-46	BRAZIER HEAD TAPTITE SCREW	
S	1M,2M		N88-3006-46	FLAT HEAD TAPTITE SCREW	
R1,2			RD14BB2E101J	RD 100 J 1/4W	
R3			RK73FB2A102J	CHIP R 1.0K J 1/10W	
R4			RD14BB2E560J	RD 56 J 1/4W	
R5,6			RK73FB2A181J	CHIP R 180 J 1/10W	
R7-10			RK73FB2A103J	CHIP R 10K J 1/10W	
R11			RK73FB2A563J	CHIP R 56K J 1/10W	
R12			RK73FB2A121J	CHIP R 120 J 1/10W	
R13			RK73FB2A101J	CHIP R 100 J 1/10W	
R14			RK73FB2A563J	CHIP R 56K J 1/10W	
R15			RK73FB2A121J	CHIP R 120 J 1/10W	
R16			RK73FB2A101J	CHIP R 100 J 1/10W	
R17			RK73FB2A330J	CHIP R 33 J 1/10W	
R18			RK73FB2A103J	CHIP R 10K J 1/10W	
R19			RK73FB2A330J	CHIP R 33 J 1/10W	
R20-23			RK73FB2A103J	CHIP R 10K J 1/10W	
R24,25			RD14BB2E100J	RD 10 J 1/4W	
R26-30			RK73FB2A103J	CHIP R 10K J 1/10W	
R31			RK73FB2A472J	CHIP R 4.7K J 1/10W	
R32			RK73FB2A103J	CHIP R 10K J 1/10W	
R33			RD14BB2E101J	RD 100 J 1/4W	
R34			RK73FB2A472J	CHIP R 4.7K J 1/10W	
VR101,102	3L		R01-3435-05	POTENTIOMETER 10K	
W12-17			R92-0679-05	CHIP R 0 OHM	
W18-28			R92-0670-05	CHIP R 0 OHM	
W29-31			R92-0679-05	CHIP R 0 OHM	
W32			R92-0670-05	CHIP R 0 OHM	
W34			R92-0670-05	CHIP R 0 OHM	
W35,36			R92-0679-05	CHIP R 0 OHM	
W37			R92-0670-05	CHIP R 0 OHM	
W40	2B	*	E33-1984-05	PROCESSED WIRE KIT (to FIL:CN4)	
W40	2B	*	E33-1984-05	PROCESSED WIRE KIT (to CONT:CN4)	
W40	2B	*	E33-1984-05	PROCESSED WIRE KIT (to RL:AT1)	
W40	2B	*	E33-1984-05	PROCESSED WIRE KIT (to RL:AT2)	
K1			S51-2407-05	RELAY	
K101-103			S76-0401-05	RELAY	
K105-108			S76-0401-05	RELAY	
M1,2	3L		T42-0453-05	DC MOTOR	
D1,2			1SS101	DIODE	
D3-8			1SS226	DIODE	
D10			1S1555	DIODE	
D101-103			1S1555	DIODE	
D105-108			1S1555	DIODE	
D109,110			RLS73	DIODE	
IC1			SN74S74N	IC (ONE SHOT MULTI)	
IC2,3			TC4066BP	IC (ANALOG/ DIGITAL SW)	
IC4,5			BA6109U2	IC (MOTOR DRIVER)	
IC6			NJM2903S	IC (DUAL COMPALATOR)	
IC7			MC78L05M	IC (VOLTAGE REGULATOR/ +5V)	

PARTS LSIT

AT UNIT (X53-3340-02)
CONTROL UNIT (X53-356X-XX)

Ref. No.	Address	New parts	Parts No.	Description	Destination
Q1,2			2SC2714(Y)	TRANSISTOR	
Q3			DTC114EK	DIGITAL TRANSISTOR	
Q4			2SA1204(Y)	TRANSISTOR	
Q5			DTC114EK	DIGITAL TRANSISTOR	
CONTROL UNIT (X53-356X-XX) 0-11 : K,P 0-21 : M 0-22 : M2 0-71 : X 2-71 : E 2-72 : E2 2-73 : E3 2-74 : E9					
C1,2			CK73GB1H102K	CHIP C 1000PF K	
C3			C92-0044-05	CHIP-ELE 47UF 10WV	
C4			CK73GB1H102K	CHIP C 1000PF K	
C5			C92-0032-05	CHIP-ELE 4.7UF 25WV	
C6,7			CK73GF1E104Z	CHIP C 0.10UF Z	
C8			C92-0037-05	CHIP-ELE 10UF 16WV	
C9			C92-0032-05	CHIP-ELE 4.7UF 25WV	
C10,11			CK73GF1E104Z	CHIP C 0.10UF Z	
C12			C92-0037-05	CHIP-ELE 10UF 16WV	
C13			C92-0032-05	CHIP-ELE 4.7UF 25WV	
C14,15			CK73GF1E104Z	CHIP C 0.10UF Z	
C16			C92-0037-05	CHIP-ELE 10UF 16WV	
C17-41			CK73GB1H102K	CHIP C 1000PF K	
C42			CK73GB1H103K	CHIP C 0.010UF K	
C43,44			CK73GB1H102K	CHIP C 1000PF K	
C45			C92-0044-05	CHIP-ELE 47UF 10WV	
C46,47			CK73GB1H103K	CHIP C 0.010UF K	
C48,49			CC73GCH1H330J	CHIP C 33PF J	
C50-54			CK73GB1H103K	CHIP C 0.010UF K	
C55			C92-0044-05	CHIP-ELE 47UF 10WV	
C56,57			CK73GF1E104Z	CHIP C 0.10UF Z	
C58			CK73GB1H103K	CHIP C 0.010UF K	
C59			C92-0044-05	CHIP-ELE 47UF 10WV	
C60			CK73GB1H103K	CHIP C 0.010UF K	
C61			C92-0044-05	CHIP-ELE 47UF 10WV	
C62-77			CC73GCH1H101J	CHIP C 100PF J	
C78-80			CK73GB1H103K	CHIP C 0.010UF K	
C81-88			CC73GCH1H101J	CHIP C 100PF J	
C89-93			CK73GB1H103K	CHIP C 0.010UF K	
C94-96			C92-0037-05	CHIP-ELE 10UF 16WV	
C97			C92-0044-05	CHIP-ELE 47UF 10WV	
C98-102			CK73GB1H103K	CHIP C 0.010UF K	
C103,104			CC73GCH1H220J	CHIP C 22PF J	
C105-107			CK73GB1H103K	CHIP C 0.010UF K	
C108			C92-0044-05	CHIP-ELE 47UF 10WV	
C109,110			CK73GB1H103K	CHIP C 0.010UF K	
C111-113			C92-0023-05	CHIP-ELE 1.0UF 50WV	
C114			CK73GB1H103K	CHIP C 0.010UF K	
C115			C92-0023-05	CHIP-ELE 1.0UF 50WV	
C116,117			CK73GB1H103K	CHIP C 0.010UF K	
C118-124			CK73GB1H102K	CHIP C 1000PF K	
C125,126			CK73GB1H103K	CHIP C 0.010UF K	
C127-141			CC73GCH1H101J	CHIP C 100PF J	
C142-147			CK73GB1H102K	CHIP C 1000PF K	
C148-150			CC73GCH1H101J	CHIP C 100PF J	
C152			CC73GCH1H101J	CHIP C 100PF J	
C153-175			CK73GB1H102K	CHIP C 1000PF K	
C177-183			CK73GB1H102K	CHIP C 1000PF K	
C184-187			CK73GB1H103K	CHIP C 0.010UF K	
C188-223			CK73GB1H102K	CHIP C 1000PF K	
C224,225			CC73GSL1H471J	CHIP C 470PF J	

Ref. No.	Address	New parts	Parts No.	Description	Destination
C226,227			CK73GB1H103K	CHIP C 0.010UF K	
C228,229			CK73GB1H102K	CHIP C 1000PF K	
C230			CK73GB1H103K	CHIP C 0.010UF K	
C231-233			CK73GB1H102K	CHIP C 1000PF K	
C501-509			CK73GB1H103K	CHIP C 0.010UF K	
C511-521			CK73GB1H103K	CHIP C 0.010UF K	
C522			CK73GB1H102K	CHIP C 1000PF K	
C523			CK73GF1E104Z	CHIP C 0.10UF Z	
C601-604			CK73GB1H103K	CHIP C 0.010UF K	
C605			CK73GF1E104Z	CHIP C 0.10UF Z	
C606			CK73GB1H102K	CHIP C 1000PF K	
401	1D		E23-0623-04	EARTH LUG	
CN1,2		*	E40-5744-05	FLAT CABLE CONNECTOR (20P)	
CN3			E40-3239-05	PIN CONNECTOR (4P)	
CN4		*	E40-5763-05	PIN CONNECTOR (12P)	
CN5		*	E40-5744-05	FLAT CABLE CONNECTOR (20P)	
CN6			E40-5761-05	FLAT CABLE CONNECTOR (26P)	
CN7		*	E40-5742-05	FLAT CABLE CONNECTOR (13P)	
CN8		*	E40-5739-05	FLAT CABLE CONNECTOR (10P)	
CN9,10		*	E40-5740-05	FLAT CABLE CONNECTOR (20P)	
CN11		*	E40-5744-05	FLAT CABLE CONNECTOR (20P)	
CN12			E02-2015-05	SOCKET FOR IC	
CN501		*	E40-5740-05	FLAT CABLE CONNECTOR (20P)	
CN601			E40-3251-05	PIN CONNECTOR (7P)	
J601			E06-0858-15	CYLINDRICAL RECEPTACLE (8P MIC)	
A1	3G	*	F01-1007-04	HEAT SINK	
402	3G		G02-0574-04	FLAT SPRING	
403	2A	*	J19-1570-05	HOLDER (BATT)	
L1-3			L40-4705-48	SMALL FIXED INDUCTOR (47UH)	
L4,5			L40-1292-18	SMALL FIXED INDUCTOR	
L6,7			L40-4705-48	SMALL FIXED INDUCTOR (47UH)	
L8			L40-1292-18	SMALL FIXED INDUCTOR	
L11-25			L40-4705-48	SMALL FIXED INDUCTOR (47UH)	
L26,27			L40-1005-48	SMALL FIXED INDUCTOR (10UH)	
L28			L40-4705-48	SMALL FIXED INDUCTOR (47UH)	
X1		*	L77-1589-05	CRYSTAL RESONATOR (11.0592MHZ)	
X2			L78-0325-05	RESONATOR (2.0MHZ)	
G	3G		N32-2606-46	FLAT HEAD MACHIN SCREW	
R1,2			RK73GB1J101J	CHIP R 100 J 1/16W	
R3,4			RK73GB1J102J	CHIP R 1.0K J 1/16W	
R5			RK73GB1J101J	CHIP R 100 J 1/16W	
R6			RK73GB1J473J	CHIP R 47K J 1/16W	
R7-9			RK73GB1J102J	CHIP R 1.0K J 1/16W	
R10-28			RK73GB1J101J	CHIP R 100 J 1/16W	
R29			RK73GB1J105J	CHIP R 1.0M J 1/16W	
R30-37			RK73GB1J101J	CHIP R 100 J 1/16W	
R39			RK73GB1J102J	CHIP R 1.0K J 1/16W	
R40			RK73GB1J471J	CHIP R 470 J 1/16W	
R41			RK73GB1J103J	CHIP R 10K J 1/16W	
R42			RK73GB1J222J	CHIP R 2.2K J 1/16W	
R43,44			RK73GB1J104J	CHIP R 100K J 1/16W	
R45			RK73GB1J472J	CHIP R 4.7K J 1/16W	
R46			RK73GB1J102J	CHIP R 1.0K J 1/16W	
R47			RK73GB1J473J	CHIP R 47K J 1/16W	
R48			RK73GB1J102J	CHIP R 1.0K J 1/16W	X

PARTS LIST

CONTROL UNIT (X53-356X-XX)

Ref. No.	Address	New parts	Parts No.	Description				Destination
R49			RK73GB1J473J	CHIP R	47K	J	1/16W	
R51			RK73GB1J473J	CHIP R	47K	J	1/16W	
R52			RK73GB1J103J	CHIP R	10K	J	1/16W	
R53			RK73GB1J102J	CHIP R	1.0K	J	1/16W	E3E9M
R54			RK73GB1J473J	CHIP R	47K	J	1/16W	
R55,56			RK73GB1J103J	CHIP R	10K	J	1/16W	
R57			RK73GB1J102J	CHIP R	1.0K	J	1/16W	EE2E3E9
R58			RK73GB1J473J	CHIP R	47K	J	1/16W	
R59-68			RK73GB1J103J	CHIP R	10K	J	1/16W	
R69			RK73GB1J102J	CHIP R	1.0K	J	1/16W	E2MM2
R70			RK73GB1J473J	CHIP R	47K	J	1/16W	
R71,72			RK73GB1J103J	CHIP R	10K	J	1/16W	
R73			RK73GB1J102J	CHIP R	1.0K	J	1/16W	E
R74			RK73GB1J473J	CHIP R	47K	J	1/16W	
R75-85			RK73GB1J103J	CHIP R	10K	J	1/16W	
R86,87			RK73GB1J472J	CHIP R	4.7K	J	1/16W	
R88			RK73GB1J153J	CHIP R	15K	J	1/16W	
R89			RK73GB1J334J	CHIP R	330K	J	1/16W	
R90-92			RK73GB1J153J	CHIP R	15K	J	1/16W	
R93			RK73GB1J103J	CHIP R	10K	J	1/16W	
R94,95			RK73GB1J153J	CHIP R	15K	J	1/16W	
R96			RK73GB1J105J	CHIP R	1.0M	J	1/16W	
R97			RK73GB1J102J	CHIP R	1.0K	J	1/16W	
R98			RK73GB1J473J	CHIP R	47K	J	1/16W	
R99			RK73GB1J102J	CHIP R	1.0K	J	1/16W	
R100-105			RK73GB1J105J	CHIP R	1.0M	J	1/16W	
R107			RK73GB1J105J	CHIP R	1.0M	J	1/16W	
R108-119			RK73GB1J104J	CHIP R	100K	J	1/16W	
R120-130			RK73GB1J101J	CHIP R	100	J	1/16W	
R131			RK73GB1J102J	CHIP R	1.0K	J	1/16W	
R132,133			RK73GB1J103J	CHIP R	10K	J	1/16W	
R134-137			RK73GB1J101J	CHIP R	100	J	1/16W	
R138-140			RK73GB1J101J	CHIP R	100	J	1/16W	
R141-144			RK73GB1J102J	CHIP R	1.0K	J	1/16W	
R145			RK73GB1J223J	CHIP R	22K	J	1/16W	
R146,147			RK73GB1J473J	CHIP R	47K	J	1/16W	
R148-150			RK73GB1J101J	CHIP R	100	J	1/16W	
R152-169			RK73GB1J101J	CHIP R	100	J	1/16W	
R170			RK73GB1J474J	CHIP R	470K	J	1/16W	
R171			RK73GB1J102J	CHIP R	1.0K	J	1/16W	
R172-177			RK73GB1J101J	CHIP R	100	J	1/16W	
R179-201			RK73GB1J101J	CHIP R	100	J	1/16W	
R202			RK73GB1J473J	CHIP R	47K	J	1/16W	
R203-214			RK73GB1J101J	CHIP R	100	J	1/16W	
R215			RK73GB1J473J	CHIP R	47K	J	1/16W	
R216-222			RK73GB1J101J	CHIP R	100	J	1/16W	
R223			RK73GB1J333J	CHIP R	33K	J	1/16W	
R224			RK73GB1J101J	CHIP R	100	J	1/16W	
R225			RK73GB1J473J	CHIP R	47K	J	1/16W	
R226			RK73GB1J104J	CHIP R	100K	J	1/16W	
R227-234			RK73GB1J103J	CHIP R	10K	J	1/16W	
R235-237			RK73GB1J102J	CHIP R	1.0K	J	1/16W	
R238-240			RK73GB1J101J	CHIP R	100	J	1/16W	
R241			RK73GB1J473J	CHIP R	47K	J	1/16W	
R242,243			RK73GB1J102J	CHIP R	1.0K	J	1/16W	
R244			RK73GB1J101J	CHIP R	100	J	1/16W	KPMXE
R244			RK73GB1J101J	CHIP R	100	J	1/16W	E2E3E9
R245			RK73GB1J473J	CHIP R	47K	J	1/16W	
R501-504			RK73GB1J473J	CHIP R	47K	J	1/16W	

Ref. No.	Address	New parts	Parts No.	Description				Destination
R505			RK73GB1J391J	CHIP R	390	J	1/16W	
R506			RK73GB1J271J	CHIP R	270	J	1/16W	
R507			RK73GB1J473J	CHIP R	47K	J	1/16W	
R508			RK73GB1J391J	CHIP R	390	J	1/16W	
R509			RK73GB1J271J	CHIP R	270	J	1/16W	
R510			RK73GB1J391J	CHIP R	390	J	1/16W	
R511			RK73GB1J271J	CHIP R	270	J	1/16W	
R512			RK73GB1J391J	CHIP R	390	J	1/16W	
R513			RK73GB1J271J	CHIP R	270	J	1/16W	
R514			RK73GB1J473J	CHIP R	47K	J	1/16W	
R515			RK73GB1J391J	CHIP R	390	J	1/16W	
R516			RK73GB1J271J	CHIP R	270	J	1/16W	
R517			RK73GB1J391J	CHIP R	390	J	1/16W	
R518			RK73GB1J271J	CHIP R	270	J	1/16W	
R519			RK73GB1J391J	CHIP R	390	J	1/16W	
R520			RK73GB1J271J	CHIP R	270	J	1/16W	
R521-523			RK73GB1J473J	CHIP R	47K	J	1/16W	
R524			RK73GB1J102J	CHIP R	1.0K	J	1/16W	
R525			RK73GB1J473J	CHIP R	47K	J	1/16W	
R526-527			RK73GB1J101J	CHIP R	100	J	1/16W	
R528			RK73GB1J391J	CHIP R	390	J	1/16W	
R529			RK73GB1J271J	CHIP R	270	J	1/16W	
R530			RK73GB1J391J	CHIP R	390	J	1/16W	
R531			RK73GB1J271J	CHIP R	270	J	1/16W	
R532			RK73GB1J391J	CHIP R	390	J	1/16W	
R533			RK73GB1J271J	CHIP R	270	J	1/16W	
R534			RK73GB1J391J	CHIP R	390	J	1/16W	
R535			RK73GB1J271J	CHIP R	270	J	1/16W	
R536-539			RK73GB1J101J	CHIP R	100	J	1/16W	
R540			RK73GB1J473J	CHIP R	47K	J	1/16W	
R541,542			RK73GB1J101J	CHIP R	100	J	1/16W	
R543-546			RK73GB1J473J	CHIP R	47K	J	1/16W	
R547,548			RK73GB1J103J	CHIP R	10K	J	1/16W	
R549-555			RK73GB1J473J	CHIP R	47K	J	1/16W	
R556			RK73GB1J103J	CHIP R	10K	J	1/16W	
S1			S62-0412-05	SLIDE SWITCH				
S501-545		*	S70-0439-05	TACT SWITCH				
S546-551		*	S70-0439-05	TACT SWITCH				
D1-3			1SS355	DIODE				
D4		*	RD7.5M(B3)	ZENER DIODE				
D5-12			1SS355	DIODE				
D501			B30-2036-05	LED (RED)				
D502		*	B30-2146-05	LED (ORANGE)				
D510-519		*	B30-2146-05	LED (ORANGE)				
IC1,2			UPC7805H	IC (VOLTAGE REGULATOR/ +5V)				
IC3			TA78L08F	IC (VOLTAGE REGULATOR)				
IC4			AT2402N10SI2 7	IC (2kbit SERIAL EEPROMM)				
IC5			MB3780A	IC (BATTERY BACKUP)				
IC6		*	M37702S4BFP	IC				
IC7			TC7S04F	IC (2CH NAND GATE)				
IC8			LC3564QMF-10	IC				
IC9			TC4052BF	IC (4CH MPX/DE-MPX)				
IC10			TC7S04F	IC (2CH NAND GATE)				
IC11		*	TC74VHC32F	IC				
IC12		*	27C512RJLVC	IC				
IC13			TC4052BF	IC (4CH MPX/DE-MPX)				
IC14		*	TC74VHC08F	IC				
IC15		*	TC74VHC245F	IC				

PARTS LSIT

CONTROL UNIT (X53-356X-XX)
TX-RX UNIT (X57-4620-00)

Ref. No.	Address	New parts	Parts No.	Description	Destination
IC16			CXD1095Q	IC (I/O EXPANDER)	
IC17,18		*	TC74VHC138F	IC	
IC19		*	TC74VHC573F	IC	
IC20,21			LZ92K371	IC (ENCODER PROCESSOR)	
IC22,23			CXD1095Q	IC (I/O EXPANDER)	
IC24		*	68HC05G2419553	IC	
IC25,26			TC4584BF	IC (BUFF)	
IC27		*	ADM232LAR	IC	
IC28			NJM2904M	IC (OP AMP X2)	
IC29			TC7S32F	IC (2CH NAND GATE)	
IC501-504			UPD6345GS	IC	
Q1			DTA143EK	DIGITAL TRANSISTOR	
Q2			DTC143EK	DIGITAL TRANSISTOR	
Q3,4			DTC114EK	DIGITAL TRANSISTOR	
Q5			DTC143EK	DIGITAL TRANSISTOR	
Q6-11			DTC114EK	DIGITAL TRANSISTOR	
Q12,13			DTA143EK	DIGITAL TRANSISTOR	
Q14-22			DTC143EK	DIGITAL TRANSISTOR	
Q23,24			DTA143EK	DIGITAL TRANSISTOR	
Q27,28			DTC114EK	DIGITAL TRANSISTOR	
Q29-31			DTC143TK	DIGITAL TRANSISTOR	
Q33			DTC143EK	DIGITAL TRANSISTOR	
Q501,502			DTC114EK	DIGITAL TRANSISTOR	

TX-RX UNIT (X57-4620-00)

C1			C90-2045-05	ELECTRO	2.2UF	25WV
C2,3			CK73FF1E104Z	CHIP C	0.10UF	Z
C4,5			CC73FCH1H330J	CHIP C	33PF	J
C6			C90-2045-05	ELECTRO	2.2UF	25WV
C7,8			CK73FF1E104Z	CHIP C	0.10UF	Z
C9-14			CC73FCH1H330J	CHIP C	33PF	J
C15			CC73FSL1H152J	CHIP C	1500PF	J
C16			CC73FCH1H101J	CHIP C	100PF	J
C17			CC73FSL1H152J	CHIP C	1500PF	J
C18			CC73FCH1H101J	CHIP C	100PF	J
C19-22			CK73FF1E104Z	CHIP C	0.10UF	Z
C23			C90-2045-05	ELECTRO	2.2UF	25WV
C24			CK73FB1H223K	CHIP C	0.022UF	K
C25			CK73FF1E104Z	CHIP C	0.10UF	Z
C26,27			CK73FB1H223K	CHIP C	0.022UF	K
C28			C90-2045-05	ELECTRO	2.2UF	25WV
C29			CK73FF1E104Z	CHIP C	0.10UF	Z
C30			CK73GB1H102K	CHIP C	1000PF	K
C31			CK73FB1H471K	CHIP C	470PF	K
C32			CK73FF1E104Z	CHIP C	0.10UF	Z
C33			CK73GB1H102K	CHIP C	1000PF	K
C34			C90-2045-05	ELECTRO	2.2UF	25WV
C36			CC73GCH1H330J	CHIP C	33PF	J
C37			CK73GB1H102K	CHIP C	1000PF	K
C38			CK73GB1H103K	CHIP C	0.010UF	K
C39,40			CK73FB1H102K	CHIP C	1000PF	K
C41			C90-2045-05	ELECTRO	2.2UF	25WV
C42			CK73FB1H103K	CHIP C	0.010UF	K
C44			CK73GB1H102K	CHIP C	1000PF	K
C45			CC73FCH1H121J	CHIP C	120PF	J
C46			CK73GB1H102K	CHIP C	1000PF	K
C50			CK73GB1H102K	CHIP C	1000PF	K

Ref. No.	Address	New parts	Parts No.	Description			Destination
C52			CE04EW1C470M	ELECTRO	47UF	16WV	
C53			CK73GB1E223K	CHIP C	0.022UF	K	
C54			CQ92M1H154K	MYLAR	0.15UF	K	
C55			CK73FB1H102K	CHIP C	1000PF	K	
C56			CE04EW1C101M	ELECTRO	100UF	16WV	
C57			CC73ECH1H202J	CHIP C	2000PF	J	
C58			CK73FB1H103K	CHIP C	0.010UF	K	
C59			CC73GCH1H680J	CHIP C	68PF	J	
C60			CC73GCH1H180J	CHIP C	18PF	J	
C61			CC73GCH1H060D	CHIP C	6.0PF	D	
C62			CC73GCH1H470J	CHIP C	47PF	J	
C63			CK73GB1H103K	CHIP C	0.010UF	K	
C64			CE04EW1C101M	ELECTRO	100UF	16WV	
C65,66			CK73GB1H102K	CHIP C	1000PF	K	
C67			CE04EW1C470M	ELECTRO	47UF	16WV	
C68,69			CK73GB1H102K	CHIP C	1000PF	K	
C100			CE04EW1C100M	ELECTRO	10UF	16WV	
C101			CK73FF1E104Z	CHIP C	0.10UF	Z	
C103			CE04EW1H010M	ELECTRO	1.0UF	50WV	
C104			CE04EW1C100M	ELECTRO	10UF	16WV	
C105			CK73GB1H102K	CHIP C	1000PF	K	
C106			CC73FCH1H102J	CHIP C	1000PF	J	
C107			CK73FF1E104Z	CHIP C	0.10UF	Z	
C108			CE04EW1C100M	ELECTRO	10UF	16WV	
C109			CK73FF1E104Z	CHIP C	0.10UF	Z	
C112			CC73FCH1H102J	CHIP C	1000PF	J	
C113,114			CQ92FM1H223K	MYLAR	0.022UF	K	
C116			CC73FCH1H102J	CHIP C	1000PF	J	
C118,119			CC73GCH1H271J	CHIP C	270PF	J	
C120			CE04EW1C100M	ELECTRO	10UF	16WV	
C121			CE04EW1H010M	ELECTRO	1.0UF	50WV	
C122			CC73FSL1H152J	CHIP C	1500PF	J	
C123			CC73GCH1H101J	CHIP C	100PF	J	
C124			CC73GCH1H221J	CHIP C	220PF	J	
C125			CK73GB1E223K	CHIP C	0.022UF	K	
C126			CE04EW1C100M	ELECTRO	10UF	16WV	
C127			CK73GB1H103K	CHIP C	0.010UF	K	
C128			CC73FSL1H221J	CHIP C	220PF	J	
C129			CC73FCH1H101J	CHIP C	100PF	J	
C130			CE04EW1C100M	ELECTRO	10UF	16WV	
C131			CK73FF1E104Z	CHIP C	0.10UF	Z	
C132			CE04EW1C100M	ELECTRO	10UF	16WV	
C133			CC73GCH1H101J	CHIP C	100PF	J	
C134			CK73GB1E223K	CHIP C	0.022UF	K	
C135			CE04EW1C100M	ELECTRO	10UF	16WV	
C136			CK73GB1E223K	CHIP C	0.022UF	K	
C137			CC73FCH1H102J	CHIP C	1000PF	J	
C138			CC73GCH1H221J	CHIP C	220PF	J	
C139			CC73GCH1H271J	CHIP C	270PF	J	
C140,141			CK73GB1E223K	CHIP C	0.022UF	K	
C142			CE04EW1C100M	ELECTRO	10UF	16WV	
C143			CK73GB1E223K	CHIP C	0.022UF	K	
C144		*	CQ92FM1H683K	MYLAR	0.068UF	K	
C145			CK73FB1E104K	CHIP C	0.10UF	K	
C146,147			CC73FCH1H102J	CHIP C	1000PF	J	
C150			CK73GB1E223K	CHIP C	0.022UF	K	
C151			CE04EW1C100M	ELECTRO	10UF	16WV	
C152			CC73FCH1H102J	CHIP C	1000PF	J	
C153			CC73GCH1H271J	CHIP C	270PF	J	

PARTS LIST

TX-RX UNIT (X57-4620-00)

Ref. No.	Address	New parts	Parts No.	Description			Destination
C154			CK73GB1E223K	CHIP C	0.022UF	K	
C155			CE04EW1C100M	ELECTRO	10UF	16WV	
C156			CK73FF1E104Z	CHIP C	0.10UF	Z	
C157			CK73GB1E223K	CHIP C	0.022UF	K	
C158			C90-2045-05	ELECTRO	2.2UF	25WV	
C159,160			CK73FF1E104Z	CHIP C	0.10UF	Z	
C161			CK73GB1E223K	CHIP C	0.022UF	K	
C162			CE04EW1C100M	ELECTRO	10UF	16WV	
C163			CK73FF1E104Z	CHIP C	0.10UF	Z	
C164			CE04EW1C100M	ELECTRO	10UF	16WV	
C165			CK73FF1E104Z	CHIP C	0.10UF	Z	
C166,167			CE04EW1C100M	ELECTRO	10UF	16WV	
C168,169			CK73FF1E104Z	CHIP C	0.10UF	Z	
C170			CK73GB1H103K	CHIP C	0.010UF	K	
C171-176			CE04EW1C100M	ELECTRO	10UF	16WV	
C177			CQ92M1H103K	MYLAR	0.010UF	K	
C178,179			CC73FSL1H152J	CHIP C	1500PF	J	
C180,181			CC73ECH1H202J	CHIP C	2000PF	J	
C182			CC73GCH1H331J	CHIP C	330PF	J	
C183-185			CC73FSL1H152J	CHIP C	1500PF	J	
C186			CE04EW1C100M	ELECTRO	10UF	16WV	
C187			CC73GCH1H331J	CHIP C	330PF	J	
C188			CK73GB1H562K	CHIP C	5600PF	K	
C189			CE04EW1C100M	ELECTRO	10UF	16WV	
C190			CC73GCH1H331J	CHIP C	330PF	J	
C191,192			CE04NW1C100M	ELECTRO	10UF	16WV	
C193			CK73GB1H103K	CHIP C	0.010UF	K	
C194			CE04NW1C100M	ELECTRO	10UF	16WV	
C195			CE04EW1H010M	ELECTRO	1.0UF	50WV	
C196,197			CE04NW1C100M	ELECTRO	10UF	16WV	
C198			CE04EW1C100M	ELECTRO	10UF	16WV	
C199,200			CE04NW1C220M	ELECTRO	22UF	16WV	
C201,202			CK73GF1E104Z	CHIP C	0.10UF	Z	
C203,204			CE04NW1E4R7M	ELECTRO	4.7UF	25WV	
C205			CE04EW1C100M	ELECTRO	10UF	16WV	
C206,207			CK73GF1E104Z	CHIP C	0.10UF	Z	
C208			CK73GB1E223K	CHIP C	0.022UF	K	
C209,210			CE04NW1C100M	ELECTRO	10UF	16WV	
C212,213			CE04NW1H010M	ELECTRO	1.0UF	50WV	
C214			CK73GB1H472K	CHIP C	4700PF	K	
C215,216			CE04EW1C100M	ELECTRO	10UF	16WV	
C218,219			CK73EF1E474Z	CHIP C	0.47UF	Z	
C221,222			CK73FB1H102K	CHIP C	1000PF	K	
C223			CE04EW1C471M	ELECTRO	470UF	16WV	
C224			CE04EW1C100M	ELECTRO	10UF	16WV	
C225			CE04EW1C470M	ELECTRO	47UF	16WV	
C226			CE04EW1C101M	ELECTRO	100UF	16WV	
C227			CE04EW1C100M	ELECTRO	10UF	16WV	
C228			CE04EW1C101M	ELECTRO	100UF	16WV	
C229			CE04EW1C100M	ELECTRO	10UF	16WV	
C230			CE04EW1C471M	ELECTRO	470UF	16WV	
C231,232			CK73EF1E474Z	CHIP C	0.47UF	Z	
C233			CQ92M1H154K	MYLAR	0.15UF	K	
C235,236			CK73FB1H102K	CHIP C	1000PF	K	
C237			CE04EW1E471M	ELECTRO	470UF	25WV	
C240			CC73FSL1H152J	CHIP C	1500PF	J	
C241			CE04EW1H010M	ELECTRO	1.0UF	50WV	
C300,301			CC73FCH1H101J	CHIP C	100PF	J	
C302			CC73GCH1H101J	CHIP C	100PF	J	

Ref. No.	Address	New parts	Parts No.	Description			Destination
C303,304			CC73FCH1H101J	CHIP C	100PF	J	
C305			CC73GCH1H101J	CHIP C	100PF	J	
C306,307			CC73FCH1H101J	CHIP C	100PF	J	
C308			CC73GCH1H101J	CHIP C	100PF	J	
C309,310			CC73FCH1H101J	CHIP C	100PF	J	
C312,313			CC73FCH1H101J	CHIP C	100PF	J	
C314			CC73GCH1H101J	CHIP C	100PF	J	
C315			CC73FCH1H101J	CHIP C	100PF	J	
C316-320			CK73FB1H102K	CHIP C	1000PF	K	
C321			CC73FSL1H471J	CHIP C	470PF	J	
C326,327			CK73GB1H102K	CHIP C	1000PF	K	
C330-333			CK73FB1H102K	CHIP C	1000PF	K	
C334			CK73GB1E223K	CHIP C	0.022UF	K	
C335			CC73GCH1H331J	CHIP C	330PF	J	
C336-340			CK73GB1E223K	CHIP C	0.022UF	K	
C341			CK73FF1E104Z	CHIP C	0.10UF	Z	
C342			CC73FSL1H152J	CHIP C	1500PF	J	
C343			CK73FB1H562K	CHIP C	5600PF	K	
C344			CK73GB1H472K	CHIP C	4700PF	K	
C345			CK73GB1E223K	CHIP C	0.022UF	K	
C346-348			CC73FCH1H101J	CHIP C	100PF	J	
C349,350			CK73FF1E104Z	CHIP C	0.10UF	Z	
C351			CK73GB1E223K	CHIP C	0.022UF	K	
C355			CE04NW1C100M	ELECTRO	10UF	16WV	
C356			CE04EW1HR47M	ELECTRO	0.47UF	50WV	
C357			CE04EW1C100M	ELECTRO	10UF	16WV	
C358-361			CK73FB1H103K	CHIP C	0.010UF	K	
C363			CK73GB1H103K	CHIP C	0.010UF	K	
C364			C90-2045-05	ELECTRO	2.2UF	25WV	
C365-375			CK73FB1H471K	CHIP C	470PF	K	
C376			CK73GB1E223K	CHIP C	0.022UF	K	
C377-379			CK73FB1H471K	CHIP C	470PF	K	
C381,382			CK73FB1H103K	CHIP C	0.010UF	K	
C383			CK73GB1H102K	CHIP C	1000PF	K	
C384			CK73FB1H102K	CHIP C	1000PF	K	
C385			CK73GB1H103K	CHIP C	0.010UF	K	
C386			CK73FB1H103K	CHIP C	0.010UF	K	
C387			CK73GB1H103K	CHIP C	0.010UF	K	
C388			CK73FB1H471K	CHIP C	470PF	K	
C389,390			CK73GB1H471K	CHIP C	470PF	K	
C391-394			CK73FB1H103K	CHIP C	0.010UF	K	
C395			CK73GB1H103K	CHIP C	0.010UF	K	
C400			CC73FSL1H471J	CHIP C	470PF	J	
C401			CK73FB1H103K	CHIP C	0.010UF	K	
C402			C90-2167-05	ELECTRO	100UF	16WV	
CN1			E40-3239-05	PIN CONNECTOR (4P)			
CN3			E40-3239-05	PIN CONNECTOR (4P)			
CN4			E40-3242-05	PIN CONNECTOR (7P)			
CN5		*	E40-5747-05	PIN CONNECTOR (11P)			
CN6			E40-3243-05	PIN CONNECTOR (8P)			
CN7			E40-5736-05	FLAT CABLE CONNECTOR (26P)			
CN8		*	E40-5740-05	FLAT CABLE CONNECTOR (20P)			
CN9			E40-3240-05	PIN CONNECTOR (5P)			
CN10			E40-3238-05	PIN CONNECTOR (3P)			
CN11		*	E40-5741-05	FLAT CABLE CONNECTOR (8P)			
CN12			E40-3237-05	PIN CONNECTOR (2P)			
CN13			E04-0191-05	RF COAXIAL CABLE SOCKET			
CN14-16			E02-2015-05	SOCKET FOR IC			
CN17			E40-5067-05	PIN CONNECTOR (10P)			

PARTS LSIT

TX-RX UNIT (X57-4620-00)

Ref. No.	Address	New parts	Parts No.	Description	Destination
J1			E11-0455-05	PHONE JACK (3.5D)	
J2			E11-0431-05	PHONE JACK	
J4			E63-0401-05	PHONO JACK	
J5			E06-1352-05	DIN SOCKET	
J6			E11-0455-05	PHONE JACK (3.5D)	
J7		*	E58-0428-05	SUB PLUG (D) 9P	
W1		*	E37-0536-05	LEAD WIRE WITH MINIPIN PLUG	
A1	4G	*	F01-1005-04	HEAT SINK	
A2	4F		F11-1127-04	SHIELDING CASE	
A3,4	4G		G02-0574-04	FLAT SPRING	
A5	4G		G02-0719-04	FLAT SPRING	
CF1,2			L72-0374-05	CERAMIC FILTER (455KHZ)	
CF3			L72-0366-05	CERAMIC FILTER (455KHZ)	
L1			L40-2285-48	SMALL FIXED INDUCTOR (220NH)	
L2			L40-4785-48	SMALL FIXED INDUCTOR	
L3			L40-1011-15	SMALL FIXED INDUCTOR	
L4		*	L34-4397-05	COIL	
L5			L40-1011-15	SMALL FIXED INDUCTOR	
L8		*	L40-4711-15	SMALL FIXED INDUCTOR	
L9			L40-1011-15	SMALL FIXED INDUCTOR	
L10			L40-1092-12	SMALL FIXED INDUCTOR	
L11,17			L40-1011-15	SMALL FIXED INDUCTOR	
L18			L40-1001-15	SMALL FIXED INDUCTOR	
L19,20		*	L39-1245-05	COIL	
L21		*	L40-2711-33	SMALL FIXED INDUCTOR	
L22,23			L40-2201-12	SMALL FIXED INDUCTOR	
L24,25			L40-1092-12	SMALL FIXED INDUCTOR	
L26			L40-1001-15	SMALL FIXED INDUCTOR	
R1			RK73FB2A103J	CHIP R 10K J 1/10W	
R2,3			RK73GB1J103J	CHIP R 10K J 1/16W	
R4-6			RK73GB1J101J	CHIP R 100 J 1/16W	
R7			RK73FB2A103J	CHIP R 10K J 1/10W	
R8			RK73GB1J682J	CHIP R 6.8K J 1/16W	
R9			RK73GB1J222J	CHIP R 2.2K J 1/16W	
R10			RK73GB1J330J	CHIP R 33 J 1/16W	
R11			RK73GB1J183J	CHIP R 18K J 1/16W	
R12			RK73FB2A103J	CHIP R 10K J 1/10W	
R13			RK73GB1J101J	CHIP R 100 J 1/16W	
R16			RK73GB1J680J	CHIP R 68 J 1/16W	
R17,18			RK73FB2A222J	CHIP R 2.2K J 1/10W	
R19			RK73GB1J101J	CHIP R 100 J 1/16W	
R21-24			RK73FB2A103J	CHIP R 10K J 1/10W	
R50			RK73GB1J682J	CHIP R 6.8K J 1/16W	
R51			RK73FB2A104J	CHIP R 100K J 1/10W	
R52			RK73GB1J392J	CHIP R 3.9K J 1/16W	
R53			RK73GB1J221J	CHIP R 220 J 1/16W	
R54			RK73GB1J152J	CHIP R 1.5K J 1/16W	
R55,56			RK73GB1J103J	CHIP R 10K J 1/16W	
R57			RK73GB1J334J	CHIP R 330K J 1/16W	
R58			RK73GB1J470J	CHIP R 47 J 1/16W	
R59			RK73GB1J151J	CHIP R 150 J 1/16W	
R60			RK73GB1J152J	CHIP R 1.5K J 1/16W	
R61			RK73GB1J333J	CHIP R 33K J 1/16W	
R62			RK73GB1J223J	CHIP R 22K J 1/16W	
R63			RK73GB1J102J	CHIP R 1.0K J 1/16W	
R64,65			RK73GB1J470J	CHIP R 47 J 1/16W	
R66			RK73GB1J221J	CHIP R 220 J 1/16W	

Ref. No.	Address	New parts	Parts No.	Description	Destination
R100			RK73FB2A100J	CHIP R 10 J 1/10W	
R101			RK73GB1J472J	CHIP R 4.7K J 1/16W	
R103			RK73GB1J102J	CHIP R 1.0K J 1/16W	
R104			RK73GB1J472J	CHIP R 4.7K J 1/16W	
R105			RK73GB1J102J	CHIP R 1.0K J 1/16W	
R106			RK73GB1J154J	CHIP R 150K J 1/16W	
R109			RK73GB1J102J	CHIP R 1.0K J 1/16W	
R110			RK73GB1J223J	CHIP R 22K J 1/16W	
R111			RK73GB1J222J	CHIP R 2.2K J 1/16W	
R113			RK73GB1J104J	CHIP R 100K J 1/16W	
R114			RK73GB1J472J	CHIP R 4.7K J 1/16W	
R117			RK73GB1J823J	CHIP R 82K J 1/16W	
R118			RK73GB1J222J	CHIP R 2.2K J 1/16W	
R119,120			RK73GB1J223J	CHIP R 22K J 1/16W	
R121,122			RK73GB1J123J	CHIP R 12K J 1/16W	
R123			RK73GB1J223J	CHIP R 22K J 1/16W	
R124			RK73GB1J103J	CHIP R 10K J 1/16W	
R126			RK73GB1J183J	CHIP R 18K J 1/16W	
R127,128			RK73GB1J103J	CHIP R 10K J 1/16W	
R129			RK73GB1J472J	CHIP R 4.7K J 1/16W	
R130			RK73GB1J223J	CHIP R 22K J 1/16W	
R131			RK73GB1J101J	CHIP R 100 J 1/16W	
R132			RK73GB1J472J	CHIP R 4.7K J 1/16W	
R133			RK73GB1J103J	CHIP R 10K J 1/16W	
R134,135			RK73GB1J152J	CHIP R 1.5K J 1/16W	
R136			RK73GB1J331J	CHIP R 330 J 1/16W	
R137			RK73FB2A102J	CHIP R 1.0K J 1/10W	
R138			RK73GB1J152J	CHIP R 1.5K J 1/16W	
R139			RK73GB1J223J	CHIP R 22K J 1/16W	
R140			RK73GB1J470J	CHIP R 47 J 1/16W	
R141			RK73GB1J392J	CHIP R 3.9K J 1/16W	
R142,143			RK73GB1J222J	CHIP R 2.2K J 1/16W	
R144			RK73GB1J101J	CHIP R 100 J 1/16W	
R145			RK73GB1J472J	CHIP R 4.7K J 1/16W	
R146,147			RK73GB1J101J	CHIP R 100 J 1/16W	
R148			RK73GB1J471J	CHIP R 470 J 1/16W	
R149			RK73GB1J101J	CHIP R 100 J 1/16W	
R150			RK73GB1J471J	CHIP R 470 J 1/16W	
R151			RK73GB1J472J	CHIP R 4.7K J 1/16W	
R152			RK73GB1J152J	CHIP R 1.5K J 1/16W	
R153,154			RK73GB1J331J	CHIP R 330 J 1/16W	
R155			RK73GB1J222J	CHIP R 2.2K J 1/16W	
R156			RK73GB1J332J	CHIP R 3.3K J 1/16W	
R157			RK73GB1J222J	CHIP R 2.2K J 1/16W	
R158,159			RK73GB1J472J	CHIP R 4.7K J 1/16W	
R160			RK73GB1J103J	CHIP R 10K J 1/16W	
R161			RK73GB1J222J	CHIP R 2.2K J 1/16W	
R162,163			RK73GB1J331J	CHIP R 330 J 1/16W	
R164			RK73GB1J222J	CHIP R 2.2K J 1/16W	
R165			RK73GB1J331J	CHIP R 330 J 1/16W	
R166			RK73GB1J392J	CHIP R 3.9K J 1/16W	
R167			RK73GB1J472J	CHIP R 4.7K J 1/16W	
R168			RK73GB1J100J	CHIP R 10 J 1/16W	
R169			RK73GB1J471J	CHIP R 470 J 1/16W	
R170			RK73GB1J101J	CHIP R 100 J 1/16W	
R171,172			RK73FB2A100J	CHIP R 10 J 1/10W	
R173			RK73GB1J101J	CHIP R 100 J 1/16W	
R174			RK73GB1J123J	CHIP R 12K J 1/16W	
R175			RK73FB2A123J	CHIP R 12K J 1/10W	

PARTS LIST

TX-RX UNIT (X57-4620-00)

Ref. No.	Address	New parts	Parts No.	Description				Destination
R176			RK73FB2A183J	CHIP R	18K	J	1/10W	
R177			RK73GB1J183J	CHIP R	18K	J	1/16W	
R178			RK73FB2A153J	CHIP R	15K	J	1/10W	
R179			RK73GB1J103J	CHIP R	10K	J	1/16W	
R180			RK73GB1J821J	CHIP R	820	J	1/16W	
R181			RK73GB1J222J	CHIP R	2.2K	J	1/16W	
R182			RK73GB1J103J	CHIP R	10K	J	1/16W	
R183			RK73FB2A153J	CHIP R	15K	J	1/10W	
R184			RK73GB1J272J	CHIP R	2.7K	J	1/16W	
R185			RK73GB1J153J	CHIP R	15K	J	1/16W	
R186			RK73FB2A222J	CHIP R	2.2K	J	1/10W	
R187			RK73GB1J223J	CHIP R	22K	J	1/16W	
R188			RK73GB1J101J	CHIP R	100	J	1/16W	
R189,190			RK73GB1J153J	CHIP R	15K	J	1/16W	
R191,192			RK73GB1J222J	CHIP R	2.2K	J	1/16W	
R193,194			RK73GB1J223J	CHIP R	22K	J	1/16W	
R196			RK73FB2A472J	CHIP R	4.7K	J	1/10W	
R197			RK73GB1J103J	CHIP R	10K	J	1/16W	
R198,199			RK73GB1J104J	CHIP R	100K	J	1/16W	
R200			RK73FB2A101J	CHIP R	100	J	1/10W	
R201			RK73GB1J221J	CHIP R	220	J	1/16W	
R202,203			RK73GB1J104J	CHIP R	100K	J	1/16W	
R204			RK73GB1J222J	CHIP R	2.2K	J	1/16W	
R205			RK73GB1J272J	CHIP R	2.7K	J	1/16W	
R206			RK73GB1J224J	CHIP R	220K	J	1/16W	
R207			RK73GB1J222J	CHIP R	2.2K	J	1/16W	
R208			RK73GB1J123J	CHIP R	12K	J	1/16W	
R209			RK73GB1J563J	CHIP R	56K	J	1/16W	
R215			RK73GB1J681J	CHIP R	680	J	1/16W	
R220			RK73GB1J103J	CHIP R	10K	J	1/16W	
R300			RK73FB2A100J	CHIP R	10	J	1/10W	
R301			RK73GB1J101J	CHIP R	100	J	1/16W	
R303-319			RK73GB1J101J	CHIP R	100	J	1/16W	
R320			RK73GB1J102J	CHIP R	1.0K	J	1/16W	
R323			RK73GB1J101J	CHIP R	100	J	1/16W	
R325			RK73FB2A473J	CHIP R	47K	J	1/10W	
R330			RK73GB1J470J	CHIP R	47	J	1/16W	
R331			RK73GB1J102J	CHIP R	1.0K	J	1/16W	
R332			RK73GB1J222J	CHIP R	2.2K	J	1/16W	
R334			RK73GB1J331J	CHIP R	330	J	1/16W	
R335			RK73GB1J101J	CHIP R	100	J	1/16W	
R336			RK73GB1J102J	CHIP R	1.0K	J	1/16W	
R337,338			RK73GB1J124J	CHIP R	120K	J	1/16W	
R339,340			RK73GB1J334J	CHIP R	330K	J	1/16W	
R343			RK73GB1J471J	CHIP R	470	J	1/16W	
R344			RK73FB2A2R2J	CHIP R	2.2	J	1/10W	
R345-347			RK73GB1J101J	CHIP R	100	J	1/16W	
R348,349			RK73GB1J473J	CHIP R	47K	J	1/16W	
R350,351			RK73FB2A473J	CHIP R	47K	J	1/10W	
R352-354			RK73GB1J473J	CHIP R	47K	J	1/16W	
R355			RK73GB1J103J	CHIP R	10K	J	1/16W	
R356			RK73GB1J473J	CHIP R	47K	J	1/16W	
R357			RK73GB1J103J	CHIP R	10K	J	1/16W	
R358			RK73GB1J473J	CHIP R	47K	J	1/16W	
R359			RK73GB1J101J	CHIP R	100	J	1/16W	
R364,365			RK73GB1J222J	CHIP R	2.2K	J	1/16W	
R366			R92-1252-05	CHIP R	0 OHM			
R367,368			RK73FB2A473J	CHIP R	47K	J	1/10W	
R369			RK73GB1J473J	CHIP R	47K	J	1/16W	

Ref. No.	Address	New parts	Parts No.	Description				Destination
R371-374			RK73GB1J473J	CHIP R	47K	J	1/16W	
R376			RK73GB1J473J	CHIP R	47K	J	1/16W	
R377,378			RK73FB2A473J	CHIP R	47K	J	1/10W	
R379			RK73GB1J473J	CHIP R	47K	J	1/16W	
R380-418			RK73FB2A103J	CHIP R	10K	J	1/10W	
R419-428			RK73GB1J101J	CHIP R	100	J	1/16W	
R429			RK73FB2A103J	CHIP R	10K	J	1/10W	
R430			RK73GB1J472J	CHIP R	4.7K	J	1/16W	
R431,432			RK73GB1J103J	CHIP R	10K	J	1/16W	
R433			RK73GB1J102J	CHIP R	1.0K	J	1/16W	
R434			RK73GB1J470J	CHIP R	47	J	1/16W	
R435,436			RK73GB1J472J	CHIP R	4.7K	J	1/16W	
VR1,2			R12-6732-05	TRIMMING POT.	470			
VR3			R12-6742-05	TRIMMING POT.	22K			
D1-4			RLS73	DIODE				
D5			1SV166	DIODE				
D7			DAP202K	DIODE				
D8			RLS73	DIODE				
IC1,2		*	DSP56002FC40	IC				
IC3		*	MBCG24173-6173	IC (GATE ARRAY)				
IC4		*	27C256PCJJTC-K	IC				
IC5		*	27C256PCJJUC-K	IC				
IC6		*	27C256PCJJVC-K	IC				
IC7		*	MCM56824AFN20	IC				
IC7		*	MCM56824AFN25	IC				
IC9		*	7032LC44JLQA	IC				
IC15			MB86001PF	IC				
IC16			AK4318-VS	IC				
IC17			NJM2100M	IC (OP AMPLIFIER)				
IC18			MC74HC4053F	IC (ANALOG SW)				
IC19-21			NJM4560M	IC (OP AMP X2)				
IC22		*	AD822AR	IC				
IC23			MC74HC4052F	IC (HPF)				
IC24			NJM2100M	IC (OP AMPLIFIER)				
IC25			AK5340-VS	IC (AD CONVERTER (18 Bit))				
IC26			M62363FP	IC (8bit D/A CONVERTER)				
IC27			AK4318-VS	IC				
IC28			NJM2100M	IC (OP AMPLIFIER)				
IC29			M51131L	IC (ELECTRO VOLUME)				
IC30			NJM2100M	IC (OP AMPLIFIER)				
IC31			M51131L	IC (ELECTRO VOLUME)				
IC33			LA4422	IC (AF POWER AMP/ 5.8W)				
IC34			PCM69AU	IC (18bit D/A CONVERTOR)				
IC35		*	AD822AR	IC				
IC36			NJM4560M	IC (OP AMP X2)				
IC37,38			UPC7805H	IC (VOLTAGE REGULATOR/ +5V)				
IC39			NJM78L05UA	IC (VOLTAGE REGULATOR/ +5V)				
IC40			NJM78L08UA	IC (VOLTAGE REGULATOR/ +8V)				
IC41,42			NJM3404AM	IC (OP AMP X2)				
IC43			NJM5532M	IC (OP AMP)				
IC44			TC7S04F	IC (2CH NAND GATE)				
Q1			DTC124EK	DIGITAL TRANSISTOR				
Q2,3			2SC2714(Y)	TRANSISTOR				
Q4			DTC124EK	DIGITAL TRANSISTOR				
Q5-7			2SC3324(G)	TRANSISTOR				
Q8			2SK210(GR)	FET				
Q9,10			2SC2714(Y)	TRANSISTOR				
Q12			2SC2712(Y)	TRANSISTOR				
Q13-17			2SC2412K(S)	TRANSISTOR				

PARTS LSIT

TX-RX UNIT (X57-4620-00)
VCO2 (X58-3390-03)

Ref. No.	Address	New parts	Parts No.	Description	Destination
Q22			DTC124EK	DIGITAL TRANSISTOR	
Q23			2SC2712(Y)	TRANSISTOR	
Q25			DTA143EK	DIGITAL TRANSISTOR	
Q26			DTC124XK	DIGITAL TRANSISTOR	
Q27			DTC143EK	DIGITAL TRANSISTOR	
VCO2 (X58-3390-03)					
–			B42-2437-04	S/NO LABEL	
C1			CK73FB1H102K	CHIP C 1000PF K	
C2			CC73FSL1H101J	CHIP C 100PF J	
C3			CC73FCH1H070D	CHIP C 7.0PF D	
C4			CC73FCH1H070D	CHIP C 7.0PF D	
C4			CC73FCH1H220J	CHIP C 22PF J	
C6			CC73FCH1H180J	CHIP C 18PF J	
C7			CC73FCH1H120J	CHIP C 12PF J	
C8,9			CK73FB1H102K	CHIP C 1000PF K	
C10			CC73FCH1H010C	CHIP C 1.0PF C	
C11			CK73FB1H102K	CHIP C 1000PF K	
TC1			C05-0331-15	TRIMMER CAPACITOR 10PF	
TP1-3			E23-0464-05	TERMINAL	
–			F11-1085-04	SHIELDING CASE	
			F11-1086-14	SHIELDING COVER	
–			G13-0904-04	CUSHION (COVER)	
L1			L33-0690-05	CHOKE COIL (3.3UH)	
L2			L34-2353-05	COIL	
T	2F		N30-2604-41	PAN HEAD MACHIN SCREW	
R1			RK73FB2A682J	CHIP R 6.8K J 1/10W	
R2			RK73FB2A271J	CHIP R 270 J 1/10W	
R3			RK73FB2A330J	CHIP R 33 J 1/10W	
R4,5			RK73FB2A472J	CHIP R 4.7K J 1/10W	
R6			RK73FB2A471J	CHIP R 470 J 1/10W	
R7			RK73FB2A560J	CHIP R 56 J 1/10W	
D1			1SV164	DIODE	
Q1			2SK508NV(K52)	FET	
Q2			2SC2714(Y)	TRANSISTOR	

EXPLODED VIEW

H	M3 x 6 (F)	: N32-3006-46
I	M3 x 6 (OC)	: N33-3006-41
J	M2.6 x 6 (Br-Tap)	: N87-2606-46
K	M3 x 6 (Br-Tap)	: N87-3006-46
M	M2.6 x 8 (F-Tap)	: N88-2608-46
P	M3 x 10 (TP-T)	: N91-3010-46

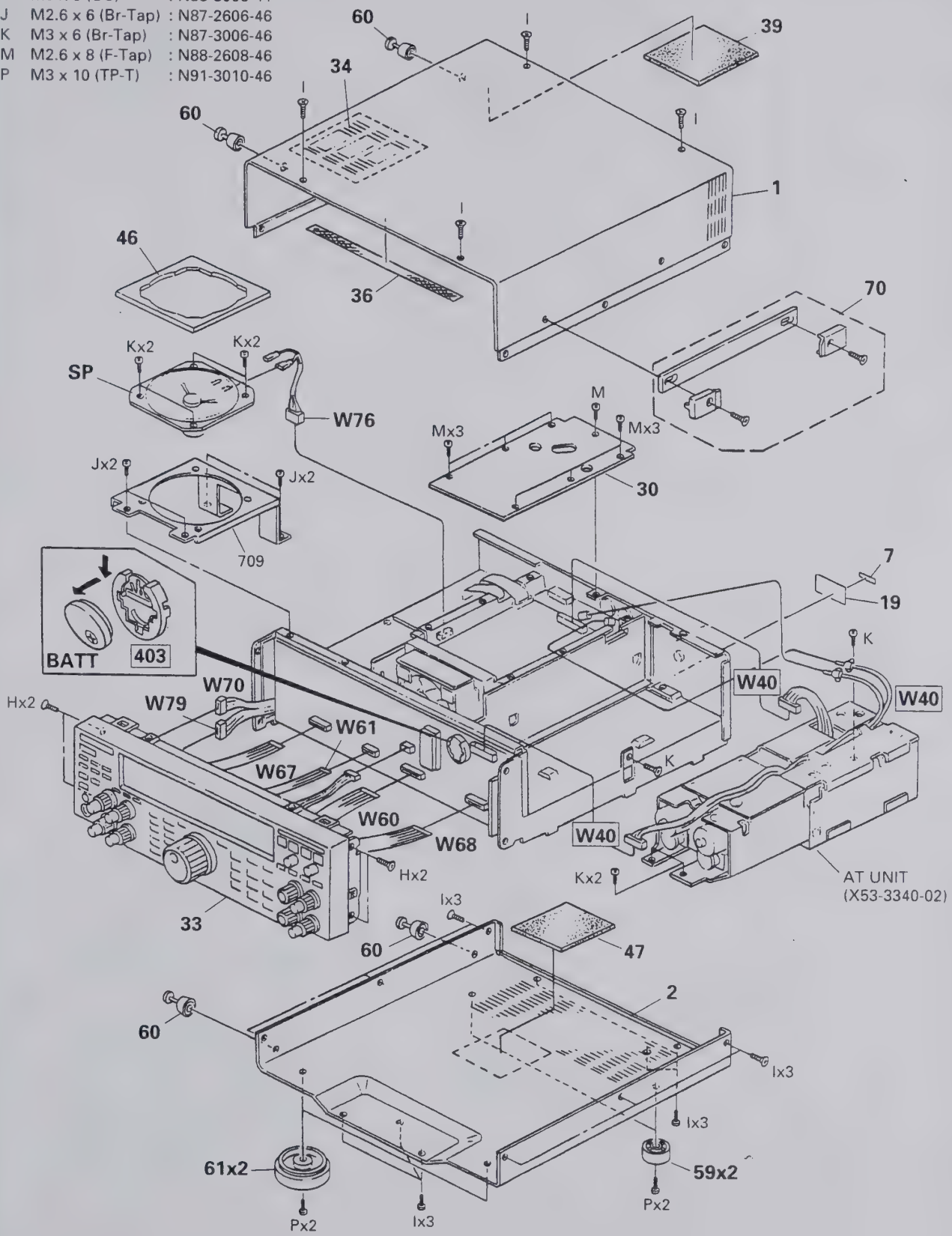

Parts with the exploded numbers larger than 700 are not supplied.

EXPLODED VIEW

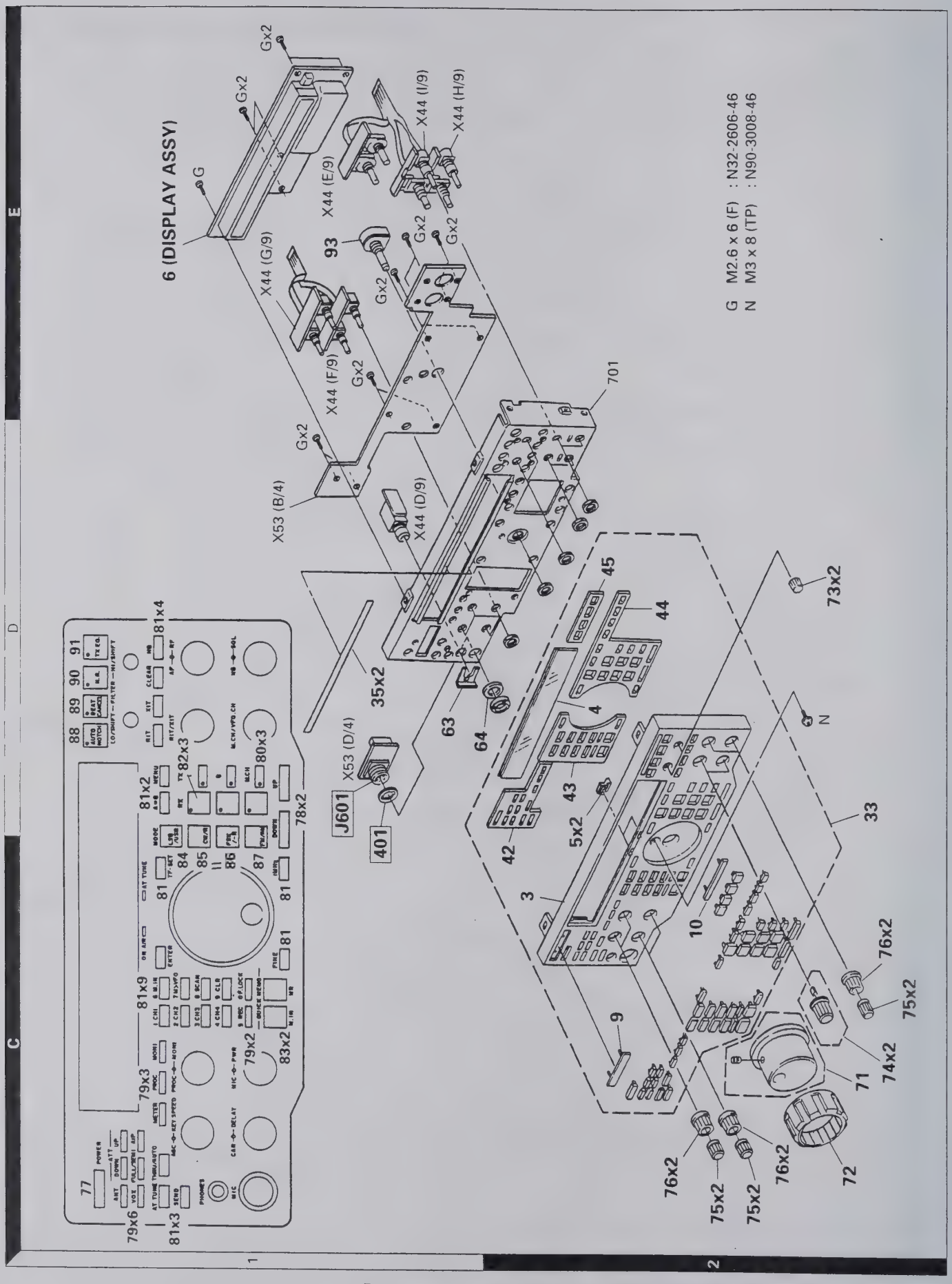

Parts with the exploded numbers larger than 700 are not supplied.

EXPLODED VIEW

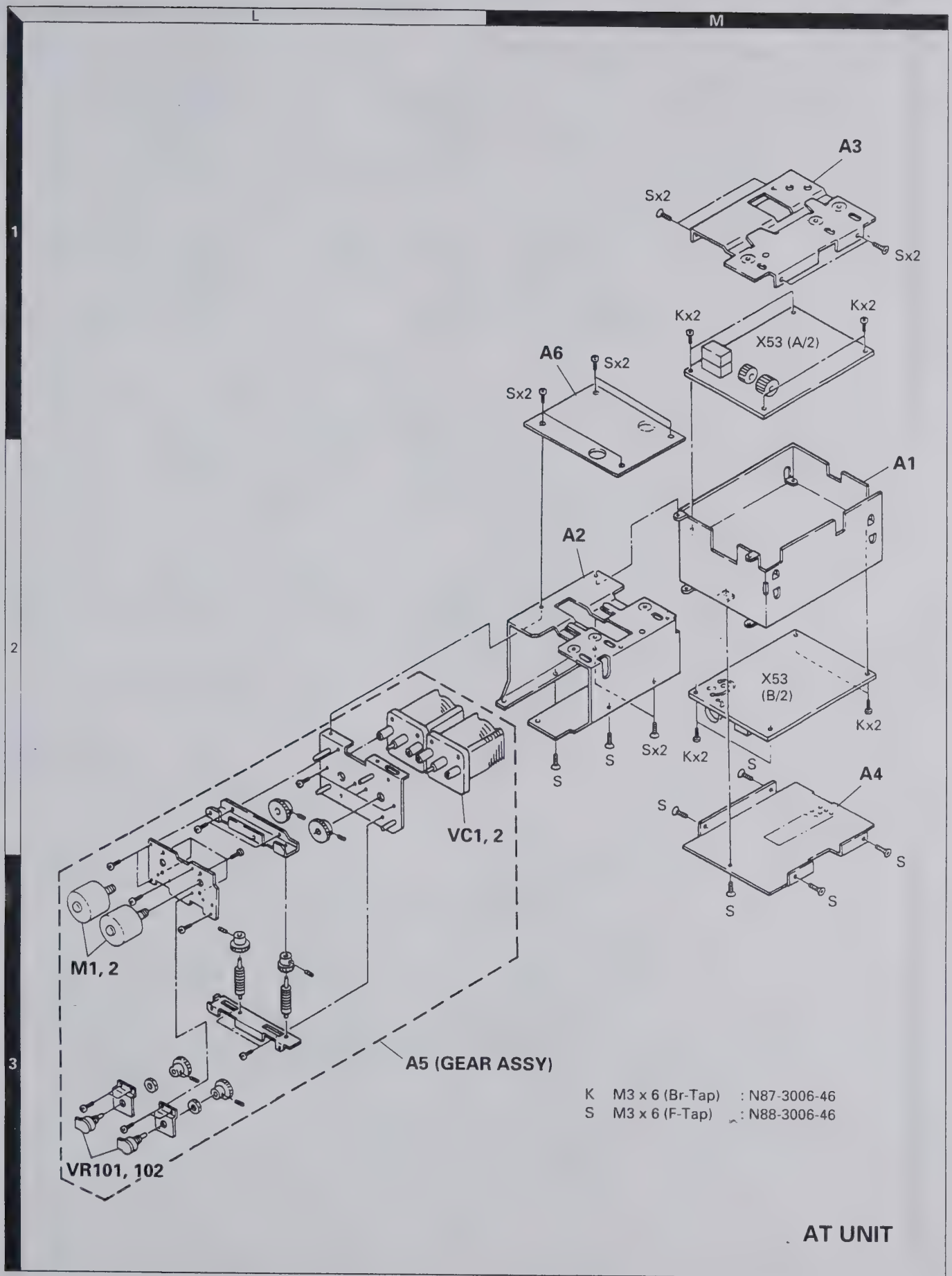

PACKING

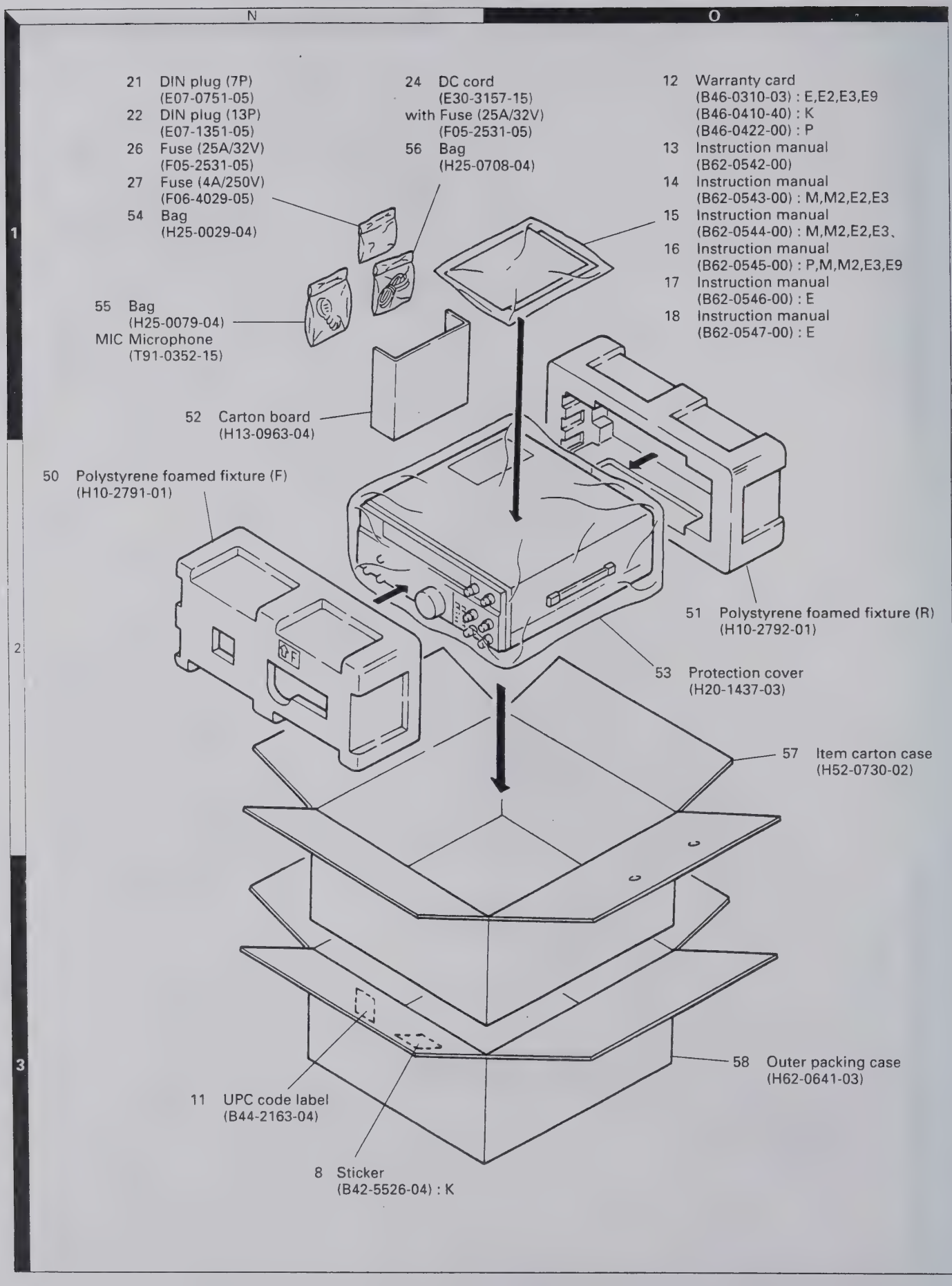
N
O
1
2
3
21 DIN plug (7P) (E07-0751-05)
22 DIN plug (13P) (E07-1351-05)
26 Fuse (25A/32V) (F05-2531-05)
27 Fuse (4A/250V) (F06-4029-05)
54 Bag (H25-0029-04)
24 DC cord (E30-3157-15) with Fuse (25A/32V) (F05-2531-05)
56 Bag (H25-0708-04)
12 Warranty card (B46-0310-03) : E,E2,E3,E9 (B46-0410-40) : K (B46-0422-00) : P
13 Instruction manual (B62-0542-00)
14 Instruction manual (B62-0543-00) : M,M2,E2,E3
15 Instruction manual (B62-0544-00) : M,M2,E2,E3
16 Instruction manual (B62-0545-00) : P,M,M2,E3,E9
17 Instruction manual (B62-0546-00) : E
18 Instruction manual (B62-0547-00) : E
55 Bag (H25-0079-04)
MIC Microphone (T91-0352-15)
52 Carton board (H13-0963-04)
50 Polystyrene foamed fixture (F) (H10-2791-01)
51 Polystyrene foamed fixture (R) (H10-2792-01)
53 Protection cover (H20-1437-03)
57 Item carton case (H52-0730-02)
58 Outer packing case (H62-0641-03)
11 UPC code label (B44-2163-04)
8 Sticker (B42-5526-04) : K

ADJUSTMENT

Required Test Equipment

1. DC Voltmeter (DC V.M)
1) Input resistance : More than 1MΩ
2) Voltage range : 1.5 to 1000V AC/DC
Note : A high-recision multimeter may be used. However, accurate readings can not be obtained for high-impedance circuits.

2. DC Ammeter
1) Current range : 100mA, 1.5A, 15A, high-precision ammeter may be used.

3. RF VTVM (RF V.M)
1) Input impedance : 1MΩ and less than 3pF, min.
2) Voltage range : 10mV to 300V
3) Frequency range : 10kHz to 500MHz

4. AF Voltmeter (AF V.M)
1) Frequency range : 50Hz to 10kHz
2) Input resistance : 1MΩ or greater
3) Voltage range : 10mV to 30V

5. AF Generator (AG)
1) Frequency range : 200Hz to 5kHz
2) Output : 1mV or less to 1V, low distortion

6. AF Dummy Load (DM. SP)
1) Impedance : 8Ω
2) Dissipation : 3W or greater

7. Oscilloscope
Requires high sensitivity, and external synchronization capability (150MHz or greater).

8. Sweep Generator (Sweep G.)
1) Center frequency : 50kHz to 90MHz
2) Frequency deviation : Maximum ±35kHz
3) Output voltage : 100mV or greater

9. Standard Signal Generator (SSG)
1) Frequency range : 50kHz to 50MHz
2) Output : –133dBm/0.05μV to 7dBm/500mV
3) Output impedance : 50Ω
4) AM and FM modulation can be possible
Note : Generator must be frequency stable.

10. Frequency Counter (f. counter)
1) Minimum input voltage : 50mV
2) Frequency range : 150MHz or greater

11. Noise Generator (Noise G.)
Must generate ignition noise containing harmonics beyond 30MHz.

12. RF Dummy Load
1) Impedance : 150Ω and 50Ω
2) Dissipation : 150W or greater

13. Linear Detector
1) Frequency range : 30MHz

14. Power Meter
1) Impedance : 50Ω
2) Dissipation : 300W continuous or greater
3) Frequency limits : 60MHz or greater

15. Spectrum Analyzer
1) Frequency range : 100kHz to 110MHz or greater
2) Bandwidth : 1kHz to 3MHz

16. Detector
1) For adjustment of BPF

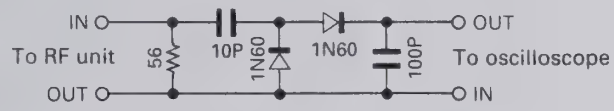

2) For adjustment of PLL/VCO BPF

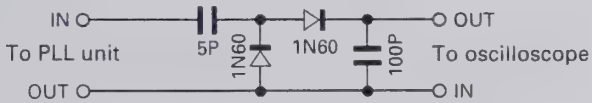

17. Directional Coupler

18. Monitor Receiver
R-1000 class

19. Microphone
MC-43S or MC-60S8

20. Tracking Generator

21. Distortion Meter

22. Double Signal Pad (50Ω)

ADJUSTMENT

Preparation

Unless otherwise specified, knobs and switches should be set as follows.

POWER	ON	PROCESSOR	Center
ATT	0	MIC	Center
AGC	Center	PWR	MAX
NB LEVEL	Center	CAR	Center
SQL	0		
AF	0		
RF	MAX		

Front Panel

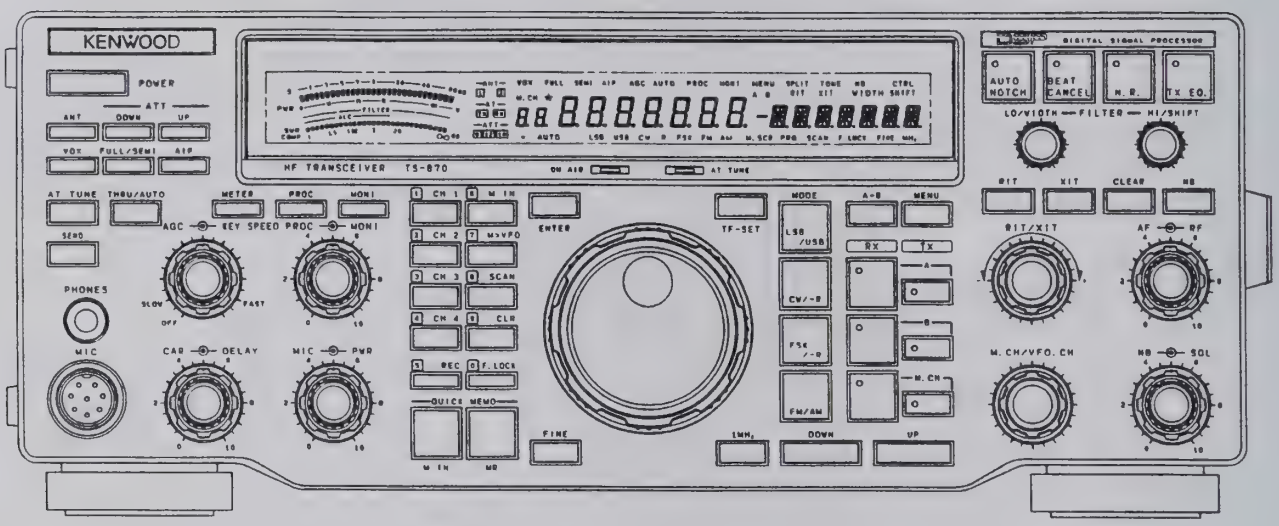

Rear Panel

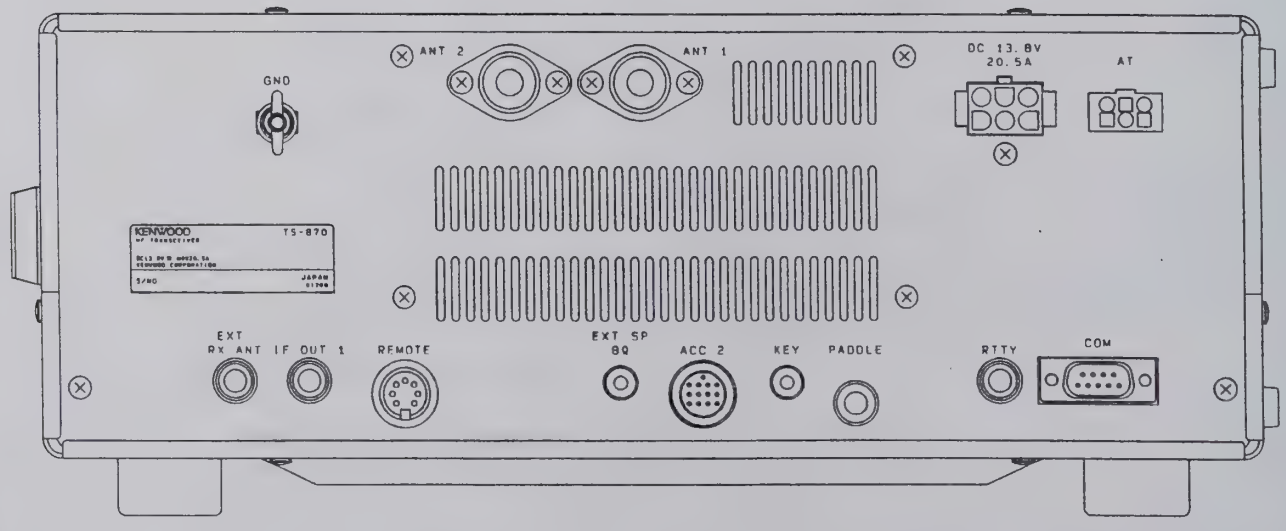

ADJUSTMENT

Service Jig

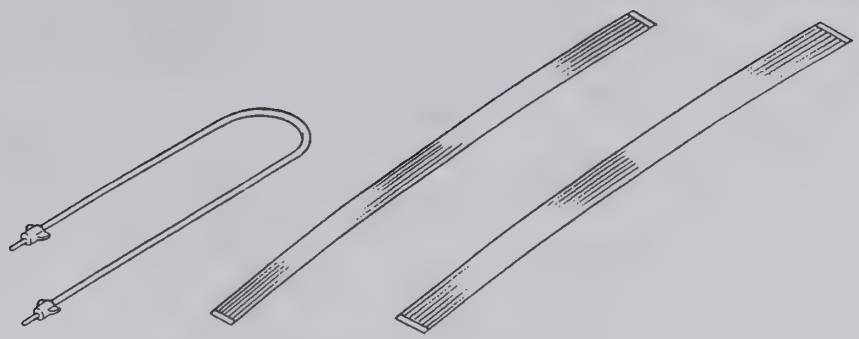

A. Lead wire with minipin plug
(E37-0064-05)
About 27cm

B . Flat cable (8P)
(E37-0581-05)
About 25cm

C. Flat cable (12P)
(E37-0580-05)
About 25cm

How to Use

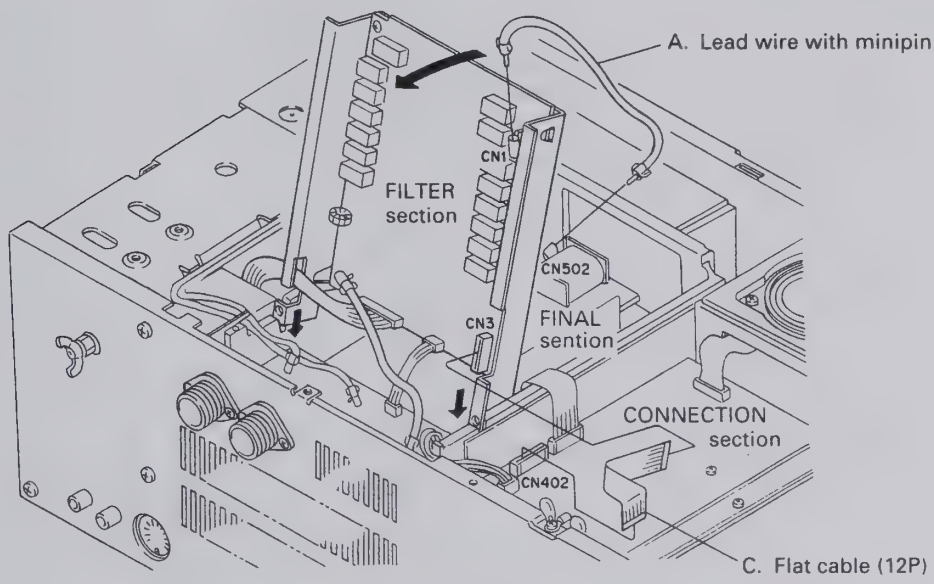

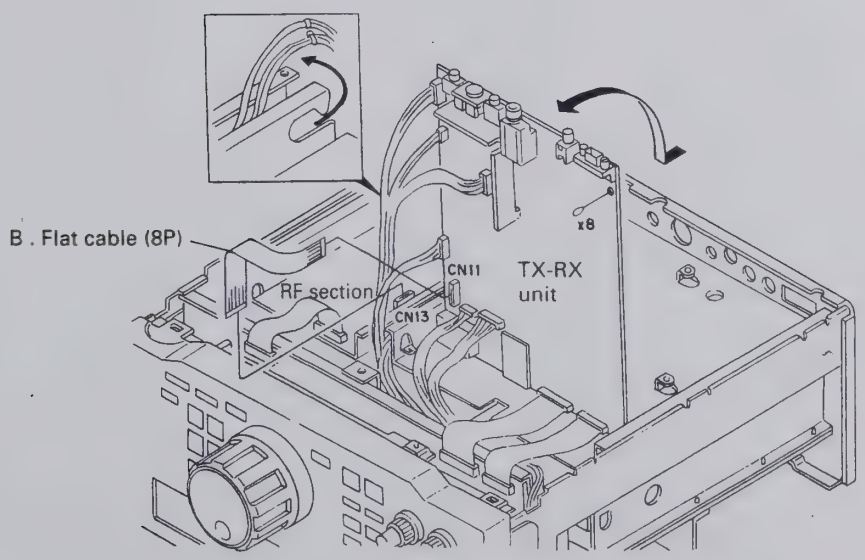

ADJUSTMENT

Service Adjustment Mode

■ Outline

- The TS-870S is adjusted by the normal method and by another method using the service adjustment mode.
- In the adjustment mode, there are 28 menu numbers A0 to BB. All adjustment data items are saved in the EEPROM.
- When the service adjustment mode is entered, data is read from the EEPROM and placed in the CPU RAM so that settings can be modified.
- The EEPROM is updated only when data is written in Menu No. BA.

  Note : Transmission is possible in reception-related adjustment modes.

■ Operation procedure

1. Adjustment mode start
   Hold down the [N.R.] key and [LSB/USB] key, and turn the [POWER] switch ON to enter the adjustment mode. The menu number will appear in M. CH on the display.
2. Adjustment mode menu number selection
   When the [M. CH/VFO. CH] control is turned, the menu number changes.
3. Adjustment mode data writing
   Press the [UP]/[DOWN] key or the microphone [UP]/[DOWN] key in MENU No. BA.
4. Adjustment mode cancel
   When the [CLR] key is pressed, the normal memory-channel display returns.

   Note : If the power is switched OFF in the adjustment mode, it is canceled.

Service Adjustment Mode Menu

Menu No.	Adjustment function	Description
A0	System	Checksum display (Program version confirmation)
A1	ALC	ALC reference voltage adjustment
A2	S-meter (SSB)	Start level setting
A3		S9 level setting
A4		Full-scale level setting
A5	Filter	8.83MHz IF filter center frequency correction
A6		455kHz IF filter center frequency correction
A7	Power adjustment	100W adjustment (With power meter curve)
A8		50W adjustment (With power meter curve)
A9		25W adjustment (With power meter curve)
AA		10W adjustment (With power meter curve)
AB	TX gain	1.9MHz band
AC		3.5MHz band
AD		7MHz band
AE		10MHz band
AF		14MHz band
B0		18MHz band
B1		21MHz band
B2		24.5MHz band
B3		29MHz band
B4	ALC meter	Stare level setting
B5		Maximum zone level setting
B6		Full-scale level setting
B7	SWR protection	Protection operation setting
B8	SWR meter	VSWR=3 level setting
B9	FM	FM deviation setting
BA	System	Writing into EEPROM
BB	Display	All LCD segments light (Not light ON AIR lamp)

ADJUSTMENT

Display Check

Item	Condition	Measurement			Adjustment			Specifications/Remarks
		Test-equipment	Unit	Terminal	Unit	Parts	Method	
1. All reset	1) DC IN : DC 13.8V Pushing [A=B] key down, [POWER] : ON.				Front panel	Display	After displaying HELLO, the display is reset as follows: DISP f. : 14.000.00 MODE : USB METER : ALC ANT : 1 AGC	Display should be normal Should be at the reset frequency.
2. All LCD segments lignt	1) Menu No. : BB						Check	All LCD segments light

PLL Section

Item	Condition	Measurement			Adjustment			Specifications/Remarks
		Test-equipment	Unit	Terminal	Unit	Parts	Method	
1. 20MHz frequency adj.	1) [POWER] : ON MODE : FM Receive	f. counter	PLL	CN510 (TP)	PLL	TC800	Frequency adjust.	20.000MHz ± 20Hz
2. 20MHz peak adj.	1) Display f. : 14.000MHz MODE : USB Receive	RF V.M		CN503		L528	MAX.	
3. 60MHz BPF adj.	1) MODE : FM Receive			IC506 2 pin		L529 L530	Repeat for MAX.	
4. 55MHz BPF adj. and frequency check	1) Display f. : 14.000MHz MODE : FM Receive			IC508 11 pin		L518 L519 L520	Repeat for MAX.	
	2) Display f. : 14.000MHz	f. counter					Frequency check	55.299~55.301MHz
5. Lock voltage adj. & check VCO1	1) Display f. : 30kHz	DC V.M		TP501	PLL	TC506	1.8V	1.8 ± 0.03V
	2) Display f. : 7.489MHz						Voltage check	4.5~7.0V
6. Lock voltage adj. & check VCO2	1) Display f. : 7.500MHz				PLL	TC507	1.8V	1.8 ± 0.03V
	2) Display f. : 14.489MHz						Voltage check	4 5~7.0V
7. Lock voltage adj. & check VCO3	1) Display f. : 14.490MHz				PLL	TC508	1.8V	1.8 ± 0.03V
	2) Display f. : 21.489MHz						Voltage check	4.5~7.0V
8. Lock voltage adj. & check VCO4	1) Display f. : 21.490MHz				PLL	TC509	1.8V	1.8 ± 0.03V
	2) Display f. : 30.000MHz						Voltage check	4.5~7.0V
9. Lock voltage adj. LO2A (VCO2) X58-3390-03	1) Display f. : 30.000MHz			TP502	VCO2 X58-3390	TC1	5.0V	5.0 ± 0.03V

ADJUSTMENT

Item	Condition	Measurement			Adjustment			Specifications/Remarks
		Test-equipment	Unit	Terminal	Unit	Parts	Method	
10. Output level check LO1 (CN504)	1) Display f. : 14.000MHz MODE : USB Receive			CN504			Output level check	–5~+2dBm
LO2A (CN505)	Meaturement condition : 50Ω terminated			CN505				–1~+6dBm (64.220MHz)
LO3 (CN502)				CN502				–6~+0dBm (8.375MHz)
20MHz (CN503)				CN503				–10~+0dBm (20.0000MHz)
LO4 (CN501)		Oscilloscope		CN501				–10~+0dBm (10.0kHz)
11. 20MHz frequency (Final check)	1) MODE : USB Receive	f. counter		CN510 (TP)	PLL	TC800	Check	20.000MHz ± 20Hz

Receiver Section

Item	Condition	Measurement			Adjustment			Specifications/Remarks
		Test-equipment	Unit	Terminal	Unit	Parts	Method	
1. DSP PLL lock voltage adj.	1) Display f. : 14.000MHz MODE : USB	DC V.M	TX-RX	TP1	TX-RX	L4	3.50V	±0.1V
2. AGC voltage adj.	1) Display f. : 14.000MHz MODE : CW [RF] GAIN : MAX [AGC] : OFF			TP2		VR2	3.00V	±0.1V
3. MCF adj.	1) Display f. : 14.000MHz MODE : USB [AGC] : OFF Spectrum analyzer setting Center f. : 73.050MHz Frequency span : 50kHz ATT : –10dBm VBW, RBW : 1kHz V.REF : 2dB/DIV	Spectrum analyzer Tracking generator	RF	CN16 CN17	RF	L65 L67 L70 L72	Adjust so that gain is max. and band shown at right becomes flat.	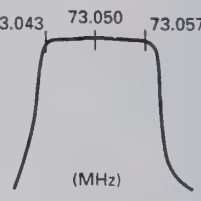
4. BPF adj	1) Display f. : 7.000MHz MODE : USB [AGC] : OFF [AIP] : OFF Spectrum analyzer setting Center f. : 7.100MHz Frequency span : 2MHz	Spectrum analyser Tracking generator	Rear panel RF	ANT CN15	RF	L28 L29 L30 L31	Waveform is as shown in the figure at the right.	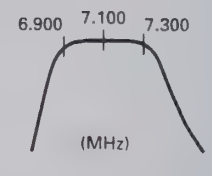
	2) Display f. : 14.000MHz Spectrum analyzer setting Center f. : 14.000MHz Frequency span : 5MHz					L38 L39 L40		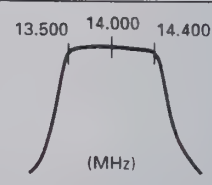
	3) Display f. : 21.000MHz Spectrum analyzer setting Center f. : 21.200MHz Frequency span : 10MHz					L44 L45 L46		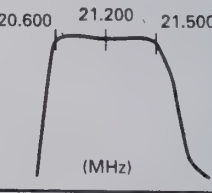

ADJUSTMENT

Item	Condition	Measurement			Adjustment			Specifications/Remarks
		Test-equipment	Unit	Terminal	Unit	Parts	Method	
(28MHz BPF adj.)	1) Display f. : 29.800MHz MODE : USB [AGC] : FAST SSG frequency : 22.101MHz SSG output : –113dBm	SSG AF V.M Oscilloscope DM. SP	Rear panel	ANT EXT. SP	RF	L50 L52	Adjust so that the gain is MAX.	MAX.
5. RX IF AMP adj.	1) Display f. : 14.100MHz MODE : USB [AGC] : OFF [AIP] : OFF AF output : 0.63V/8Ω SSG frequency : 14.101MHz SSG output : –119dBm	SSG AF V.M Oscilloscope DM. SP	Rear panel	ANT EXT. SP	RF Connec-tion	L75 L77 L451 L452 L458	Repeat 2~3 times for MAX AF output reading.	
• Item 6 to 10 below are adjusted in the adjustment mode. To terminate the adjustment menu in the middle, save your settings with Menu No. BA.								
6. Checksum check	1) Menu No. : A0				Front panel	Display	Check	Display : E7b9
7. ALC voltage adj.	1) Menu No. : A1	DC V.M	RF	TP2	Front panel	[RIT/XIT] knob	2.70V	±0.02V
8. S-meter adj.	1) Menu No. : A2 SSG frequency : 14.101MHz SSG output : –110dBm	SSG AF V.M Oscilloscope DM. SP	Rear panel	ANT EXT. SP	TX-RX	VR1	Display : 05	±02
S1	2) Menu No. : A2 SSG output : –107dBm				Front panel	[UP] key	[UP] key : Push once time	Reference display : 12±06
S9	3) Menu No. : A3 SSG output : –81dBm							Reference display : 45±10
Full-scale	4) Menu No. : A4 SSG output : –23dBm							Reference display : 80±20
9. 8.83MHz IF filter adj.	1) Menu No. : A5 SSG1 f. : 1.79980MHz SSG1 output : –60dBm SSG2 f. : 1.80260MHz SSG2 output : –60dBm	SSG1 SSG2 Double signal pad Oscilloscope (10:1 probe)	Rear panel Connec-tion	ANT TP401	Front panel	[RIT/XIT] knob	The waveforms must cross.	OK 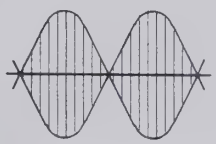
10. 455kHz IF filter adj.	1) Menu No. : A6			TP402				NG 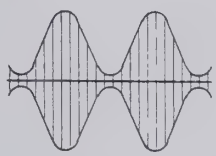
• Writing data : After items 6 to 10 have been adjusted: 1) Menu No. : BA 2) [UP] key : Push once time Display "rEAdy" → "good" (If "nG" is displayed, enter data again.) 3) [CLR] key : Push once time (Adjustment mode terminated)								

ADJUSTMENT

Item	Condition	Measurement			Adjustment			Specifications/Remarks
		Test-equipment	Unit	Terminal	Unit	Parts	Method	
11. ATT check	1) Display f. : 14.100MHz SSG frequency : 14.101MHz SSG output : –107dBm [AGC] : OFF [AIP] : OFF AF output : 1V/8Ω	SSG AF V.M Oscilloscope DM. SP	Rear panel	ANT EXT. SP	Front panel	ATT SW (UP/DOWN)	AF output should be lowered 6dB at time.	AF output ± 3dB
	a. ATT : 0dB						1.0V	ATT display : None
	b. ATT [UP] key : 6dB						0.5V	ATT display : 6
	c. ATT [UP] key : 12dB						0.25V	ATT display : 12
	d. ATT [UP] key : 18dB						0.125V	ATT display : 18
	e. ATT [DOWN] key : 12dB						0.25V	ATT display : 12
	f. ATT [DOWN] key : 6dB						0.5V	ATT display : 6
	g. ATT [DOWN] key : 0dB						1.0V	ATT display : None
12. S/N check	1) Display f. : Indicated below AF VR : 0.63V/8Ω SSG f. : Indicated below However, USB : +1kHz LSB : –1kHz	SSG AF V.M Oscilloscope Distortion meter DM. SP	Rear panel	ANT EXT. SP				Note : If the frequency is 7.5MHz or less, AIP turns ON automatically. Turn AIP OFF with the AIP switch before starting measurement.
	Frequency / MODE / SSG output / SSG MOD / DEV							
	100kHz AM –87dBm 1kHz 60%						S/N measurement	10dB or more.
	1.500MHz AM –77dBm 1kHz 60%							
	1.8MHz LSB –119dBm OFF OFF						MAX sensitivity measurement	0.7V/8Ω or more.
	3.5MHz LSB –119dBm OFF OFF							
	5.5MHz LSB –119dBm OFF OFF							
	7.1MHz LSB –119dBm OFF OFF							
	10.1MHz USB –119dBm OFF OFF							
	12.5MHz USB –119dBm OFF OFF							
	14.1MHz USB –119dBm OFF OFF ←						[AIP] : ON	Sensitivity down 5~15dB.
	18.1MHz USB –119dBm OFF OFF							
	21.1MHz USB –119dBm OFF OFF							
	24.8MHz USB –123dBm OFF OFF							
	29.8MHz USB –123dBm OFF OFF							
	29.8MHz FM –119dBm 1kHz 3kHz ←						SINAD sentitivity measurement	12dB SINAD or more.
13. SSB squelch check	1) Display f. : 14.100MHz MODE : USB [AGC] : OFF SSG frequency : 14.101MHz SSG output : OFF	SSG AF V.M Oscilloscope DM. SP	Rear panel	ANT EXT. SP	Front panel	[SQL] VR	Set to the point noise disappeared.	Knob position 10 : 00~14 : 00
	2) SSG output : –101dBm						Check	Squelch should open.
	3) [SQL] VR : Fully clockwise							Squelch should close.
	4) SSG output : –83dBm							Squelch should open.
14. FM squelch check	1) Display f. : 29.8MHz MODE : FM SSG output : OFF				Front panel	[SQL] VR	Set o the point noise disappeared.	Knob position 8 : 00~12 : 00
	2) SSG output : –119dBm SSG MOD : 1kHz SSG DEV : 3kHz						Check	Squelch should open.
	3) [SQL] VR : Fully clockwise							Squelch should close.
	4) SSG output : –100dBm							Squelch should open.

ADJUSTMENT

Item	Condition	Measurement			Adjustment			Specifications/Remarks
		Test-equipment	Unit	Terminal	Unit	Parts	Method	
15. NB adj.	1) Display f. : 14.100MHz MODE : USB SSG frequency : 14.101MHz SSG output : –90dBm	SSG AF V.M Oscilloscope DM. SP DC V.M	Rear panel RF	ANT EXT. SP TP1	RF	L81 L82	Voltage minimum	
	2) [NB] key : ON [NB] VR : Center	Noise G.	Rear panel	ANT			Adjust output of noise generator to small input (S1) and large input (S9) and check each.	Noise should disappear.
16. S-meter check	1) Display f. : 14.175MHz MODE : USB [AGC] : FAST [RF] GAIN : MAX SSG frequency : 14.176MHz SSG output : –107dBm	SSG AF V.M Oscilloscope DM. SP	Rear panel	ANT EXT. SP	Front panel	Display	S-meter level : S1	–111~–101dBm
	2) SSG output : –83dBm						S-meter level : S9	–89~–77dBm
	3) [NB] key : ON						S-meter level check	Same as when [NB] key off.
17. Auto notch check	1) Display f. : 14.175MHz MODE : USB SSG frequency : 14.1765MHz SSG output : –73dBm [AUTO NOTCH] key : Push (ON)	SSG	Rear panel	ANT	Front panel	Display	S-meter level check	S-meter off.
18. Voice check (equipped on VS-2)	1) [AF] VR : Arbitrary [MENU] key : Push (ON) [M.CH/VFO.CH] knob : Menu No. 48 [UP] key : Step 73 [MENU] key : Push (OFF) [FINE] key : Push (ON)						Check	The displayed frequency can be heard vocally.

Transmitter Section

Item	Condition	Measurement			Adjustment			Specifications/Remarks
		Test-equipment	Unit	Terminal	Unit	Parts	Method	
1. TX MCF adj.	1) Display f. : 14.200MHz MODE : USB Transmit Spectrum analyzer setting TG output : –10dBm Center f. : 8.83MHz Span : 10kHz V.REF : 2dB/DIV	Tracking generator Spectrum analyzer	RF	CN10 TP3	RF	L100	MAX.	
2. TX IF AMP adj.	1) Display f. : 14.200MHz MODE : CW [CAR] VR : Center Disconnect CN4 from the RF unit and connect a 50Ω dummy load. Transmit	50Ω dummy Oscilloscope	RF	CN4	RF Connection	L99,98 L95,94 L92,91 L89 VR3 L457 L456 L455	Repeat 2 or 3 times for MAX.	Reference value 2.5Vp-p or more
	2) After adjustment, set [CAR] VR to MAX for confirmation.							

ADJUSTMENT

Item	Condition	Measurement			Adjustment			Specifications/Remarks
		Test-equipment	Unit	Terminal	Unit	Parts	Method	
3. Final base current	1) Display f. : 14.200MHz MODE : USB [MIC] VR : MIN [CAR] VR : MIN Final unit VR501,502 : MIN Connect ammeter + : External power supply – : Power connector Adjust to minimum current with VR501 and VR502 in the final unit. Transmit	Ammeter			Final	VR501	Current drain (Minimum current) +250mA	First adjust VR501 and VR502 for minimum. Adjust VR501 for an increase of 250mA when switched to TX. Then adjust VR502 for 250mA over this reading.
						VR502	Current drain (Minimum current) + driver current (250mA) + 250mA.	
• Item 4 to 13 below are adjusted in the adjustment mode. To terminate the adjustment menu in the middle, save your settings with Menu No. BA.								
4. ALC adj.	1) Menu No. : A7 Transmit	Power meter	Rear panel	ANT	Front panel	[RIT/XIT] knob	100W	±5.0W
5. NULL adj.	1) Menu No. : A7 Transmit	Power meter DC V.M	Rear panel Filter	ANT CN5	Filter	TC1	MIN.	Reference value 0.5V or less
6. ALC frequency response adj.	1) TX [M.CH] key : Push Display f. : 29.700MHz MODE : CW Transmit	Power meter	Front panel	ANT	Filter	VR1	95W	±5.0W
	2) TX [M.CH] key : Push Menu No. : A7 Transmit						100W power check	100W ± 5W When unable to be set within the range, ALC and frequency response to be adjusted.
7 TX power adj. The power meter on the display is also calibrat--ed at the same time.	1) 50W Menu No. : A8 Transmit After adjustment, [UP] key : Push	Power meter	Rear panel	ANT	Front panel	[RIT/XIT] knob	50W	±3.0W
	2) 25W Menu No. : A9 Transmit After adjustment, [UP] key : Push						25W	±2.0W
	3) 10W Menu No. : AA Transmit After adjustment, [UP] key : Push						11W	±2.0W
8. TX gain adj.	1) 1.9MHz band Menu No. : AB Transmit	Power meter	Rear panel	ANT	Front panel	[UP] key	Press the [UP] key after the beep sounds for two or three seconds.	
	2) 3.5MHz band Menu No. : AC Transmit							
	3) 7.0MHz band Menu No. : AD Transmit							
	4) 10.1MHz band Menu No. : AE Transmit							
	5) 14.1MHz band Menu No. : AF Transmit							

ADJUSTMENT

Item	Condition	Measurement			Adjustment			Specifications/Remarks
		Test-equipment	Unit	Terminal	Unit	Parts	Method	
	6) 18.0MHz band Menu No. : B0 Transmit	Power meter	Rear panel	ANT	Front panel	[UP] key	Press the [UP] key after the beep sounds for two or three seconds.	
	7) 21.0MHz band Menu No. : B1 Transmit							
	8) 24.9MHz band Menu No. : B2 Transmit							
	9) 29.7MHz band Menu No. : B3 Transmit							
9. ALC meter adj.	1) 1 dot Menu No. : B4 Transmit	Power meter	Rear panel	ANT	Front panel	[UP] key	[UP] key : Push	
	2) Zone MAX Menu No. : B5 Transmit							
	3) Full Menu No. : B6 Transmit							
10. SWR protection adj.	1) Nenu No. : B7 Transmit After adjustment, [UP] key : Push	Through type power meter 150Ωdummy	Rear panel	ANT	Front panel	[RIT/XIT] knob	40W	±3.0W
11. SWR meter adj.	1) Menu No. : B8 Transmit					[UP] key	[UP] key : Push	
12. FM DEV adj.	1) Menu No. : B9 AG output : 1kHz/30mV Transmit	Power meter Linear detector AG	Rear panel Front panel	ANT MIC	Front panel	[RIT/XIT] knob	4.6kHz	±0.1kHz
13. FM MIC sense check	1) Menu No. : B9 AG output : 1kHz/3mV **E,X** AG output : 1kHz/5mV **K,P,M**						Check	3.0kHz ± 0.5kHz
• Writing data : After items 4 to 13 have been adjusted: 1) Menu No. : BA 2) [UP] key : Push once time Display "rEAdy" → "good" (If "nG" is displayed, enter data again.) 3) [CLR] key : Push once time (Adjustment mode terminated)								
14. Spurious adj.	1) Display f. : 24.900MHz MODE : CW Transmit	Power meter Spectrum analyzer	Rear panel	ANT	RF	VR2	±1.65MHz spurious level MIN.	–60dB or less
15. Monitor level check	1) Display f. : 21.100MHz MODE : USB [MONI] key : ON [MONI] VR : Center [MIC] VR : Center [AF] VR : MIN AG output : 1kHz/10mV Transmit	Power meter AF V.M Oscilloscope DM. SP AG AF V.M	Rear panel Front panel	ANT EXT. SP MIC	Front panel	Display	Check	0.2V ± 0.05V

ADJUSTMENT

Item	Condition	Measurement			Adjustment			Specifications/Remarks
		Test-equipment	Unit	Terminal	Unit	Parts	Method	
16. Processor check	1) Display f. : 14.200MHz MODE : USB [MIC] VR : Center [PROC] key : ON [METER] : COMP AG output : 1kHz/10mV	Power meter AG AF V.M	Rear panel Front panel	ANT MIC	Front panel	Display	Check	COMP meter : 15~25dB
	2) AG output : 1kHz/1mV							COMP meter : 1dot light
17. Sidetone check	1) Display f. : 14.200MHz MODE : CW [MONI] VR : Center Key down	AF V.M Oscilloscope DM. SP Electronic keyer jig	Rear panel	EXT. SP KEY			Check	0.63V ± 0.3V
18. CW break-in check	1) Display f. : 14.200MHz MODE : CW [VOX] key : ON [FULL/SEMI] key : FULL	Power meter Oscilloscope Electronic keyer jig	Rear panel	ANT KEY			Electronic keyer jig : Key down	Full break-in operation (When the key is turned OFF, the receive mode returns immediately.)
	2) [FULL/SEMI] key : SEMI [DELAY] knob : Center							Semi break-in operation (When the key is turned OFF, the receive mode returns after a while.)
19. DRU check (equipped on DRU-3)	1) Connect a microphone to the MIC jack. MODE : USB/LSB [MIC] VR : Center [REC] key : Push						Hold down the [CH1], and talk into the microphone.	Can be recorded for about 15 seconds.
							Release and press the [CH1] key again.	The recorded voice must be played back.
20. Sub tone check	1) Display f. : 29.100MHz MODE : FM MIC jack : 600Ω terminated [A=B], [TX-B] key : Push [M.IN] key : Push two times [RX-M.CH] : Push Transmit	Power meter Linear detector Oscilloscope f. counter Microphone	Rear panel Front panel	ANT MIC			Check	DEV : ±0.5~1.0kHz Tone f. : 88.2~88.7Hz
21. TX frequency check	1) Display f. : 29.100MHz MODE : CW Transmit							29.100.000MHz ± 145Hz
22. TX frequency characteristic check	1) Display f. : 14.200MHz MODE : USB/LSB MIC jack : Connect to AG AG output : 1kHz/5mV 400Hz/5mV 2.6kHz/5mV Transmit	Power meter Oscilloscope AG AF V.M	Rear panel Front panel	ANT MIC			a. Set AG to 1.0kHz and turn the [MIC] VR to set to 100W. b. Change the AG frequency and measure the difference between the power levels at 1.0kHz and at another frequency. c. Take a measurement for each USB and LSB.	Within 6dB

ADJUSTMENT

Item	Condition	Measurement			Adjustment			Specifications/Remarks
		Test-equipment	Unit	Terminal	Unit	Parts	Method	
23. Processor check	1) Display f. : 14.200MHz MODE : USB [PROC] key : ON [METER] key : Push [PROC] VR : MIN MIC jack : Connect to AG AG output : 1.0kHz/1mV Transmit						Change [PROC] VR so that the first segment on the COMP meter lights.	
	2) AG output : 1.0kHz /10mV (20dB UP) Transmit						Check	COMP meter : within 15~25dB
24. AT	1) Display f. : Indicated below MODE : CW [METER] : SWR [THRU/AUTO] : AUTO Transmit After checked retuen to receive mode.	Through type power meter 150Ωdummy	Rear panel	ANT	Front panel	Display	Check	ON AIR LED light AT TUNE LED light. When tuning completed, LEDs off.
	2) [AT TUNE] key : ON	Frequency 1.910MHz 3.500 3.700 7.000 10.100 14.000 18.100 21.000 24.900 29.700			AT	TC1	Note : When 29.700MHz and SWR 1.0 to 1.3, variiable capacitor has flutters so that it does not stop, adjust the TC1 at which SWR 1.2 or less is acceptable.	Begins AT tuning after entering the transmission state. This should stop within roughly 6 seconds. SWR : 1.2 or less Power : 70W or more

Adjustment Points

■ **Side view**

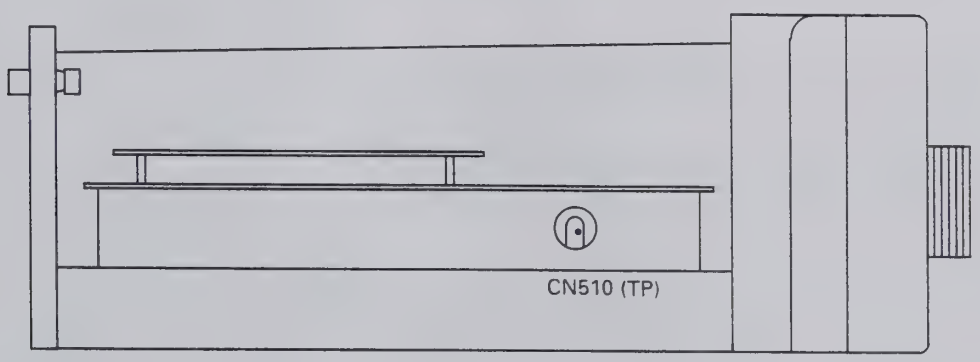

ADJUSTMENT

■ Upper view

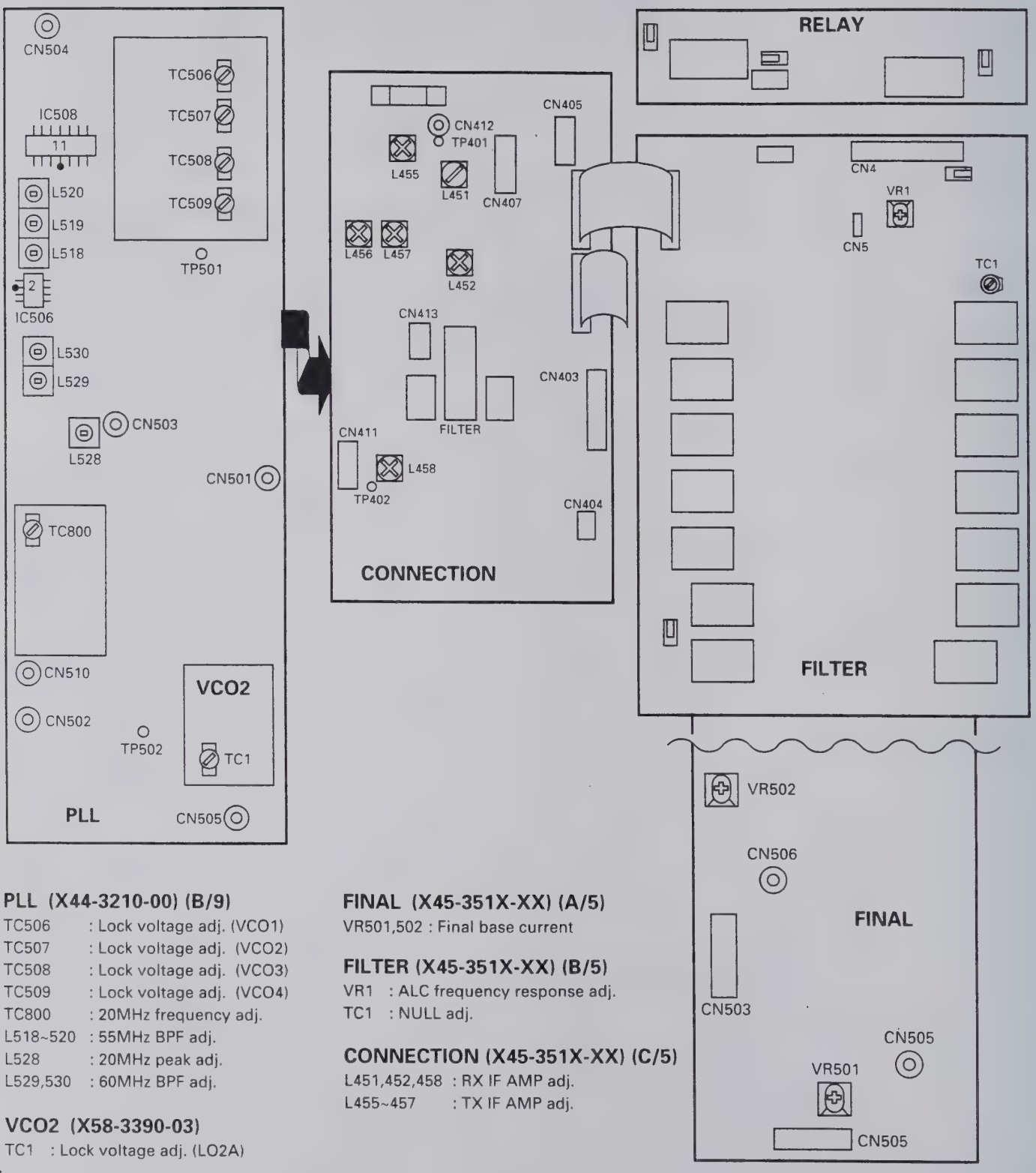

PLL (X44-3210-00) (B/9)

TC506 : Lock voltage adj. (VCO1)
TC507 : Lock voltage adj. (VCO2)
TC508 : Lock voltage adj. (VCO3)
TC509 : Lock voltage adj. (VCO4)
TC800 : 20MHz frequency adj.
L518~520 : 55MHz BPF adj.
L528 : 20MHz peak adj.
L529,530 : 60MHz BPF adj.

VCO2 (X58-3390-03)

TC1 : Lock voltage adj. (LO2A)

FINAL (X45-351X-XX) (A/5)

VR501,502 : Final base current

FILTER (X45-351X-XX) (B/5)

VR1 : ALC frequency response adj.
TC1 : NULL adj.

CONNECTION (X45-351X-XX) (C/5)

L451,452,458 : RX IF AMP adj.
L455~457 : TX IF AMP adj.

ADJUSTMENT

■ **Lower view**

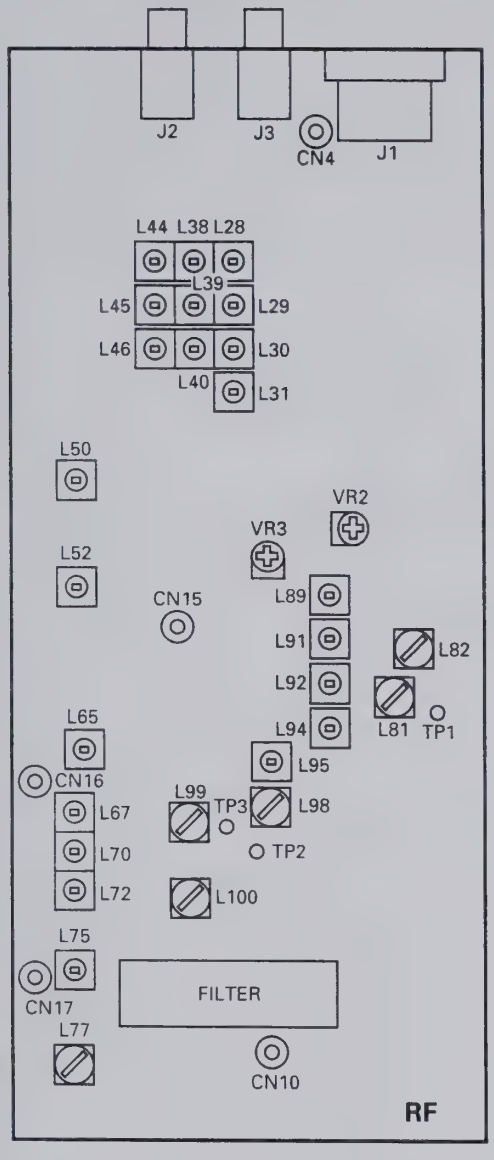

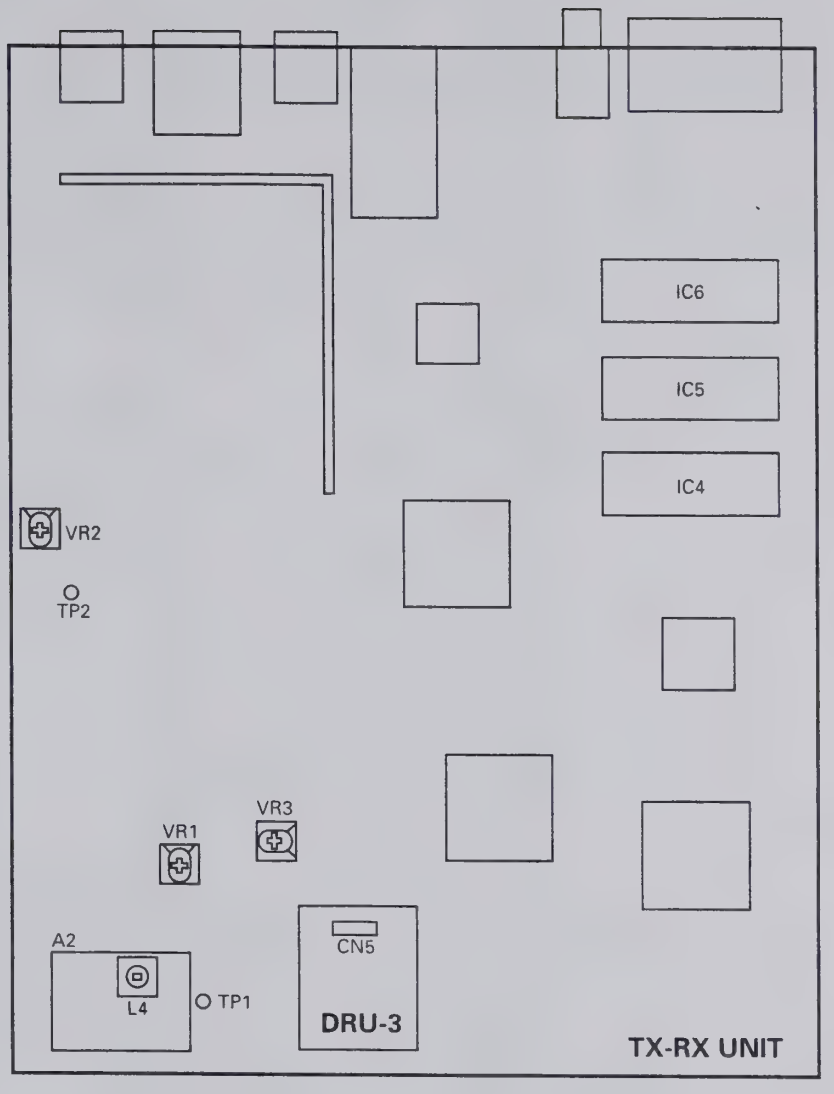

RF (X44-3210-00) (A/9)

VR2	: Spurious adj.
VR3,L89,91,92,94,95,98,99	: TX IF AMP adj.
L28~31,38~40,44~46,50,52	: BPF adj.
L65,67,70,72	: MCF adj.
L75,77	: RX IF AMP adj.
L81,82	: NB adj.
L100	: TX MCF adj.

TX-RX UNIT (X57-4620-00)

VR1 : S-meter adj.
VR2 : AGC voltage adj.
VR3 : DRU-3 recording level adj. (Adjusted to the mechanical center)
L4 : DSP PLL lock voltage adj.

TERMINAL FUNCTION

CN No.	Pin No.	Name	Function
RF UNIT (X44-3210-00) (A/9) : RF			
CN2	Coaxial	RAT	RX signal
CN4	Coaxial	DRV	TX drive signal
CN5	Coaxial	LO1	1st local oscillation 73.08~103.05MHz
CN6	Coaxial	LO2A	2nd local oscillation 64.22MHz
CN7	1	TXB	TX 8V
	2	RXB	RX 8V
	3	AGC	AGC voltage
CN10	Coaxial	TR88	RX IF output/TX IF input 8.83MHz
CN13	1	SPO	Speaker signal
	2	CKY	Keying signal
	3	AGC	AGC voltage
	4	TXC	TX : "H"
	5	RXC	RX : "H"
	6	8A	Analog 8V
	7	14S	14V-switched
	8	GND	GND
CN14	1	15K	Filter selection 15kHz
	2	3K	Filter selection 3kHz
	3	6K	Filter selection 6kHz
	4	VSF	Forward wave detection voltage
	5	VSF	Reflected wave detection voltage
	6	ALM	ALC meter output
	7	THP	Thermal protection
	8	NC	
	9	UCK2	RF serial/parallel convert clock
	10	UDA2	RF serial/parallel convert data
	11	ENR1	RF serial/parallel convertor IC1 enable
	12	ENR2	RF serial/parallel convertor IC2 enable
	13	ENR3	DAC enable
	14	NC	
	15	RBK	RF blank signal
	16	-6	-6V
	17	GND	GND
	18	NC	
	19	SS	TX/RX control signal TX : "L"
	20	NC	
J1	1	SPO	Speaker signal
	2	COM	Relay common terminal
	3	SS	TX/RX control signal
	4	MKE	TX relay close
	5	BRK	TX relay open
	6	ALC	ALC input
	7	RL	13V output when TX
J2		EXT RX	External receiver output
J3		IF OUT	SM-230
RF UNIT (X44-3210-00) (B/9) : PLL			
CN500	1	GND	GND
	2	NFMT	FM modulation on/off signal (FM TX : "L")
	3	VB3	21.489~30MHz } VCO select signal
	4	VB2	14.489~21.489MHz } Active "H"
	5	VB1	7.489~14.489MHz }
	6	VB0	0~7.489MHz }
	7	UNL	Unlock detection output (Unlock : "H")
	8	GND	GND
	9	PLE2	PLL2 enable signal (LO2A)
	10	PLE1	PLL1 enable signal (LO1)
	11	PCK	Clock
	12	PDA	PLL, DDS data
	13	14D	14V
	14	DLE3	DDS3 enable signal (LO4)
	15	DLE2	DDS2 enable signal (LO3)
	16	DLE1	DDS1 enable signal (LO1)
	17	TXC	PLL DDS latch select signal (TX : "H")
	18	GND	GND
	19	9P	9V
	20	5P	5V
CN501	1	GND	GND
	2	LO4	DDS3 output
CN502	Coaxial	LO3	DDS2 output (8.375MHz)
CN503	Coaxial	REF	Reference signal output for TX-RX unit (20MHz)
CN504	Coaxial	LO1	LO1 output (73.08~103.05MHz)
CN505	Coaxial	LO2A	LO2A output (64.22MHz)
CN506	1	FMD	FM modulation signal
	2	GND	GND
	3	GND	GND
RF UNIT (X44-3210-00) (D/9) : PHONE			
CN901	1	SPI1	Phone jack through
	2	SPG	GND
	3	SPO1	Phone jack output
RF UNIT (X44-3210-00) (E, F, G, H, I/9) : VR			
CN903	1	DGND	Digital GND
	2	VPWR	MIC/PWR VR 1
	3	VMIC	MIC/PWR VR 2
	4	VDLY	CAR/DELAY VR 1
	5	VCAR	CAR/DELAY VR 2
	6	5D	5V
CN904	1	DGND	Digital GND
	2	VMON	PROC/MONI VR 1
	3	VPRC	PROC/MONI VR 2
	4	VKEY	AGC/KEY VR 1
	5	VAGC	AGC/KEY VR 2
	6	5D	5V
CN905	1	NC	
	2	WENB	Width encoder B
	3	WENA	Width encoder A
	4	SENB	Shift encoder B
	5	SENA	Shift encoder A
	6	GND	GND
CN906	1	GND	GND
	2	VRF	AF/RF VR 1
	3	VAF	AF/RF VR 2
	4	RENA	RIT encoder A
	5	RENB	RIT encoder B
	6	5D	5V
CN907	1	GND	GND
	2	VSQL	NB/SQL VR 1
	3	VNB	NB/SQL VR 2
	4	CENA	M.CH encoder A
	5	CENB	M.CH encoder B
	6	5D	5V
FINAL UNIT (X45-351X-XX) (A/5) : FINAL			
CN501	Coaxial	DRV	Drive input (From RF)
CN502	Coaxial	PO	TX signal output (To FILTER)
CN503	1	14S	13.8V
	2	14S	13.8V
	3	TXB	TX 13.8V
	4	GND	GND
	5	GND	GND
CN504	1	14V	13.8V
	2	14V	13.8V
	3	GND	GND

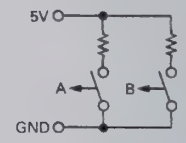

TERMINAL FUNCTION

CN No.	Pin No.	Name	Function
W501	Board	14F	Power supply 13.8V connecting harness
	in	14F	Power supply 13.8V connecting harness
		GND	Power supply 13.8V connecting harness
		GND	Power supply 13.8V connect ing harness
FIANL UNIT (X45-351X-XX) (B/5) : FILTER			
CN1	Coaxial	PO	Filter input signal
CN2	Coaxial	ATO	TX output signal (To AT)
CN3	1	8A	8V
	2	GND	GND
	3	GND	GND
	4	14S	14V
	5	14S	14V
	6	UCK2	Shift register clock
	7	UDA2	Shift register data
	8	ENF1	Shift register enable
	9	DGND	Digital GND
	10	TXB	TX power 8V
	11	VSF	Forward wave detection voltage
	12	VSR	Reflected wave detection voltage
CN4	1	ATA	Make for AT through/on relay
	2	28AT	24.5~30MHz
	3	25AT	21.5~24.5MHz
	4	18AT	18.5~21.5MHz
	5	14AT	14.5~18.5MHz
	6	10AT	10.5~14.5MHz
	7	7AT	4.0~7.5MHz
	8	4AT	2.5~4.0MHz
	9	GND	GND
	10	14S	14V
	11	GND	GND
W1	1	RL	TX/RX select signal output
	2	ANTS	ANT 1/2 select signal output
	3	GND	GND
FINAL UNIT (X45-351X-XX) (C/5) : CONNECTION			
CN401	1	15K	455kHz filter select "L" : Filter on
	2	3K	455kHz filter select "L" : Filter on
	3	6K	455kHz filter select "L" : Filter on
	4	TT	External AT tuning control (Pass through)
	5	TS	External AT tuning control (Pass through)
	6	UCK2	Pass through
	7	UDA2	Pass through
	8	ENF1	Pass through
	9	VSF	Pass through
	10	VSR	Pass through
	11	THP	Pass through
	12	14D	14V
	13	14D	14V
	14	14V	14V
	15	14V	14V
	16	PWS	Power switch on : "H"
	17	9P	PLL power 9V
	18	5P	PLL power 5V
	19	–6	–6V output
	20	GND	GND
CN402	1	8A	8V
	2	GND	GND
	3	GND	GND
	4	14S	13.8V
	5	14S	13.8V
	6	UCK2	Pass through
	7	UDA2	Pass through
	8	ENF1	Pass through
	9	DGND	Digital GND
	10	TXB	TX power 8V
	11	VSF	Pass through
	12	VSR	Pass through
CN403	1	14A	13.8V
	2	14S	13.8V
	3	8D	Digital 8V
	4	8A	Analog 8V
	5	APG	GND
	6	SPO3	Speaker output signal input
	7	SPG	Speaker GND
CN404	1	SPG	Speaker GND
	2	SP	Speaker output signal
CN405	1	14S	13.8V
	2	14S	13.8V
	3	AGND	Analog GND
	4	AGND	Analog GND
CN406	1	THP	Pass through
	2	TXB	Pass through
	3	14D	13.8V
	4	8D	Digital 8V
	5	14D	13.8V
	6	8A	Analog 8V
	7	GND	GND
	8	GND	GND
	9	14S	13.8V
	10	14S	13.8V
	11	14S	13.8V
	12	PSW	Power switch on : "H"
	13	14V	13.8V
CN407	1	14S	13.8V
	2	AGND	Analog GND
	3	TT	Pass through
	4	TS	Pass through
	5	GND	GND
CN410	Coaxial	LO3	Local LO3 8.375MHz (From PLL)
CN411	1	TIF	TX IF input
	2	GND	GND
	3	RIF	RX IF output
	4	GND	GND
CN412	Coaxial	TR88	8.83MHz
CN413	1	TXB	TX power 8V
	2	RXB	RX power 8V
	3	AGC	AGC line
FINAL UNIT (X45-351X-XX) (D/5) : AVR			
CN601	1	14V	13.8V
	2	14V	13.8V
	3	GND	GND
CN602	1	14S	13.8V
	2	14S	13.8V
	3	AGND	Analog GND
	4	AGND	Analog GND
CN603	1	THP	Thermal protection on : "H"
	2	TXB	TX 13.8V
	3	14D	13.8V
	4	8D	Digital 8V
	5	14D	Digital 13.8V
	6	8A	Analog 8V
	7	GND	GND
	8	GND	GND
	9	14S	13.8V
	10	14S	13.8V

AT coil tap band data

TERMINAL FUNCTION

CN No.	Pin No.	Name	Function
	11	14S	13.8V
	12	PSW	Power switch on : "H"
	13	14V	13.8V
CN604	1	14S	13.8V
	2	14S	13.8V
	3	TXB	TX 13.8V
	4	GND	GND
	5	GND	GND
CN605	1	MOT+	Moter drive +
	2	MOT –	Motor drive –
FINAL UNIT (X45-351X-XX) (E/5) : RELAY			
CN301	1	RL	TX/RX select signal input
	2	ANTS	ANT 1/2 select signal input
	3	GND	GND
CN302	Coaxial	ATO	TX signal input (From FILTER)
CN303	Coaxial	RAT	RX signal output (To RF)
CN304	Coaxial	AT1	Input/output to AT (RX : Output, TX : Input)
CN305	Coaxial	AT2	Input/output to AT (RX : Input, TX : Output)
CN306	TP		ANT1 GND
CN307	TP		ANT2 GND
W301	TP		ANT1 signal line
W303	TP		ANT2 signal line
AT UNIT (X53-3340-02)			
CN1	Coaxial	AT1	AT input
CN2	Coaxial	AT2	AT output
CN3	1	VRE	+5V reference voltage for A/D
	2	POD2	VC2 position detection, VR101 output
	3	GND	GND
	4	POD1	VC1 position detection, VR102 output
CN4	1	NC	
	2	M2–	Motor 2 drive –
	3	M2+	Motor 2 drive +
	4	M1–	Motor 1 drive –
	5	M1+	Motor 1 drive +
CN5	1	NC	
	2	F15	Power line 11~14V
	3	GND	GND
CN6	1	ATA	Make for AT through/on relay "L" : On
	2	NC	
CN7	1	ATG	GND for discriminating that is connected to microcomputer
	2	SPED	Motor speed control pulse
	3	APRE	Control selection "H" : Preset type, "L" : Auto tuning type
	4	VRE	+5V reference voltage for A/D
	5	PR22	Motor 2 control signal
	6	PR21	Motor 2 control signal
	7	POD2	VC2 position detection
	8	PR12	Motor 1 control signal
	9	PR11	Motor 1 control signal
	10	POD1	VC1 position detection
	11	GND	GND
CN101	1	28AT	24.5~30MHz
	2	15AT	21.5~24.5MHz
	3	NC	
	4	18AT	18.5~21.5MHz
	5	14AT	14.5~18.5MHz
	6	10AT	10.5~14.5MHz
	7	7AT	4.0~7.5MHz
	8	4AT	2.5~4.0MHz

AT coil tap band data

CN No.	Pin No.	Name	Function
	9	GND	GND
CONTROL UNIT (X53-356X-XX) (A/4) : CONTROL			
CN1	1	GND	GND
	2	NFMT	Not FM TX signal
	3	VB3	VCO selest signal
	4	VB2	VCO select signal
	5	VB1	VCO select signal
	6	VB0	VCO select signal
	7	UNL	PLL unlock signal
	8	GND	GND
	9	PLE2	PLL2 enable signal
	10	PLE1	PLL1 enable signal
	11	PCK	PLL serial clock
	12	PDA	PLL serial data
	13	14D	Digital 13.8V
	14	DLE3	DDS3 enable signal
	15	DLE2	DDS2 enable signal
	16	DLE1	DDS1 enable signal
	17	TXC	TX control signal
	18	GND	GND
	19	9P	PLL power 9V (Pass through)
	20	5P	PLL power 5V (Pass through)
CN2	1	GND	GND
	2	–6	–6V (Pass through)
	3	5P	PLL power 5V (Pass through)
	4	9P	PLL power 9V (Pass through)
	5	PSW	Power control signal
	6	14V	13.8V
	7	14V	13.8V
	8	14D	Digital 13.8V
	9	14D	Digital 13.8V
	10	THP	Thermal protection
	11	VSR	Reflected wave analog voltage
	12	VSF	Forward wave analog voltage
	13	ENF1	Enable for IC1 on FILTER board
	14	UDA2	Serial data for IC1 on FILTER board
	15	UCK2	Serial clock for IC1 on FILTER board
	16	TS	AT-300 control signal
	17	TT	AT-300 control signal
	18	6K	6kHz filter select signal
	19	3K	3kHz filter select signal
	20	15K	15kHz filter select signal
CN3	1	5D	Digital 5V
	2	MENA	Main encoder pulse A
	3	MENB	Main encoder pulse B
	4	DGND	Digital GND
CN4	1	NC	
	2	NC	
	3	SPED	Internal AT speed control signal
	4	APRE	Internal AT control select signal
	5	VRE	Reference voltage for A/D convertor
	6	PR22	Motor 2 control signal
	7	PR21	Motor 2 control signal
	8	POD2	Motor 2 position voltage
	9	PR12	Motor 1 control signal
	10	PR11	Motor 1 control signal
	11	POD1	Motor 1 position voltage
	12	GND	GND
CN5	1	GND	GND
	2	CTS	Communication inhibit signal from TS-870S
	3	RTS	Communication inhibit signal from personal computer
	4	RXD	TX data from TS-870S
	5	TXD	RX data from personal computer

TERMINAL FUNCTION

CN No.	Pin No.	Name	Function
	6	KEYS	Key jack sensing signal
	7	DASH	Electronic keyer dash signal
	8	DOT	Electronic keyer dot signal
	9	GND	GND
	10	H0	DSP control data bus
	11	H1	DSP control data bus
	12	H2	DSP control data bus
	13	H3	DSP control data bus
	14	H4	DSP control data bus
	15	H5	DSP control data bus
	16	H6	DSP control data bus
	17	H7	DSP control data bus
	18	HENA	DSP A enable signal
	19	HENB	DSP B enable signal
	20	HRW	DSP read/write control signal
CN6	1	GND	GND
	2	HA0	DSP control address bus
	3	HA1	DSP control address bus
	4	HA2	DSP control address bus
	5	GND	GND
	6	BEEP	Beep control signal
	7	MD	Microphone down signal
	8	MU	Microphone up signal
	9	SS	Standby switch
	10	GND	GND
	11	KEY	Key down signal
	12	DRST	DSP reset signal
	13	CKY	TX wave control signal
	14	RXC	RX control signal
	15	TXC	TX control signal
	16	AMUT	AF mute signal
	17	VCEN	TX-RX unit IC26 enable
	18	UCK2	TX-RX unit serial clock
	19	UDA2	TX-RX unit serial data
	20	DREN	DRU-3 control enable signal
	21	PLUL	TX-RX unit PLL unlock signal
	22	PLEN	TX-RX unit PLL control enable signal
	23	EOM	DRU-3 end of message
	24	VBSY	VS-2 busy signal
	25	STR	VS-2 synthesize control signal
	26	GND	GND
CN7	1	5D	Digital 5V
	2	VAGC	AGC VR analog voltage
	3	VKEY	KEY VR analog voltage
	4	VPRC	PROC VR analog voltage
	5	VMON	MONI VR analog voltage
	6	DGND	Digital GND
	7	NC	
	8	5D	Digital 5V
	9	VCAR	CAR VR analog voltage
	10	VDLY	DELAY VR analog voltage
	11	VMIC	MIC VR analog voltage
	12	VPWR	PWR VR analog voltage
	13	DGND	Digital GND
CN8	1	5D	Digital 5V
	2	14D	Digital 13.8V
	3	14D	Digital 13.8V
	4	ENL2	LCD driver control enable signal
	5	ENL3	LCD driver control enable signal
	6	UDA1	LCD driver control serial data
	7	UCK1	LCD driver control serial clock
	8	BLANK	LCD goes off control signal
	9	DIM	LCD dimmer control signal
	10	GND	GND

CN No.	Pin No.	Name	Function
CN9	1	BLNK	LED goes off control signal
	2	K0	Key input 0
	3	K1	Key input 1
	4	K2	Key input 2
	5	K3	Key input 3
	6	K4	Key input 4
	7	K5	Key input 5
	8	K6	key input 6
	9	K7	Key input 7
	10	PSW	Power switch input signal
	11	ENL4	Enable for IC501 on SW board
	12	ENL1	Enable for IC502~504 on SW board
	13	UDA1	Serial data for SW board
	14	UCK1	Serial clock for SW board
	15	LATC	AT tune LED control signal
	16	TXC	TX control signal (TX LED control)
	17	RES	IC501~504 reset signal
	18	5V	5V
	19	5D	Digital 5V
	20	DGND	Digital GND
CN10	1	NC	
	2	WENB	Width encoder pulse B
	3	WEBA	Width encoder pulse A
	4	SENB	Shift encoder pulse B
	5	SENA	Shift encoder pulse A
	6	GND	GND
	7	NC	
	8	5D	Digital 5V
	9	RENB	RIT encoder pulse B
	10	RENA	RIT encoder pulse A
	11	VAF	AF VR analog voltage
	12	VRF	RF VR analog voltage
	13	GND	GND
	14	NC	
	15	5D	Digital 5V
	16	CENB	Click encoder pulse B
	17	CENA	Click encoder pulse A
	18	VNB	NB VR analog voltage
	19	VSQL	SQL VR analog voltage
	20	GND	GND
CN11	1	NC	
	2	SS	Standby switch
	3	NC	
	4	GND	GND
	5	–6	–6V
	6	RBK	RF mute signal
	7	NC	
	8	ENR3	Enable for IC7 on RF board
	9	ENR2	Enable for IC2 on RF board
	10	ENR1	Enable for IC1 on RF board
	11	UDA2	Serial data for RF board
	12	UCK2	Serial clock for RF board
	13	NC	
	14	THP	Thermal protection
	15	ALM	ALC meter analog voltage
	16	VSR	Reflected wave analog voltage
	17	VSF	Forward wave analog voltage
	18	6K	6kHz filter select signal
	19	3K	3kHz filter select signal
	20	15K	15kHz filter select signal

CONTROL UNIT (X53-356X-XX) (B/4) : SW

CN501	1	DGND	Digital GND
	2	5D	Digital 5V

TERMINAL FUNCTION

CN No.	Pin No.	Name	Function
	3	5V	5V
	4	RES	IC501~504 reset signal
	5	TXC	TX control signal (TX LED control)
	6	LATC	AT tune LED control signal
	7	UCK1	Serial clock
	8	UDA1	Serial data
	9	ENL1	IC502~504 enable
	10	ENL4	IC501 enalbe
	11	PSW	Power switch output signal
	12	K7	Key output 7
	13	K6	Key output 6
	14	K5	Key output 5
	15	K4	Key output 4
	16	K3	Key output 3
	17	K2	Key output 2
	18	K1	Key output 1
	19	K0	Key output 0
	20	BLNK	LED goes off control signal
CONTROL UNIT (X53-356X-XX) (D/4) : MIC			
CN902	1	SS	Standby switch
	2	MD	Microphone down signal
	3	MU	Microphone up signal
	4	8M	8V for microphone
	5	MCG	GND
	6	MSG	MIC GND
	7	MIC	Microphone signal output
TX-RX UNIT (X57-4620-00)			
CN1	1	TIF	TX IF output (455kHz)
	2	GND	TIF GND
	3	RIF	RX IF input (455kHz)
	4	GND	RIF GND
CN3	1	LO4	Local 4 input (466kHz)
	2	GND	LO4 GND
	3	FMD	FM modulation output (To PLL)
	4	GND	FMD GND
CN4	1	MIC	Microphone signal input
	2	MSG	MIC GND
	3	MCG	GND
	4	SS	Microphone standby switch
	5	MU	Microphone up
	6	MD	Microphone down
	7	8M	8V for microphone
CN5	1	GND	GND
	2	DRMG	MIC GND
	3	DRM	Microphone signal output
	4	DRO	DRU-3 playback signal input
	5	5D	Digital 5V for DRU-3
	6	GND	GND
	7	EOM	End of message (End : "H")
	8	OVF	Over flow signal (Over flow : "L")
	9	DREN	DRU-3 enable
	10	SD	DRU-3 serial data
	11	SCK	DRU-3 clock
CN6	1	VO	Audio signal
	2	GND	GND
	3	SD	VS-2 control data
	4	SCK	VS-2 control data clock
	5	BSY	VS-2 busy
	6	STR	VS-2 synthesize control
	7	5C	5V for VS-2
	8	GND	GND
CN7	1	GND	GND

CN No.	Pin No.	Name	Function
	2	HA0	DSP data address
	3	HA1	DSP data address
	4	HA2	DSP data address
	5	GND	GND
	6	BEEP	Beep control signal
	7	MD	Microphone down signal
	8	MU	Microphone up signal
	9	SS	Standby switch
	10	GND	GND
	11	KEY	Key down signal
	12	DRST	DSP reset signal
	13	CKY	TX wave control signal
	14	RXC	RX control signal
	15	TXC	TX control signal
	16	AMUT	AF mute signal
	17	VCEN	IC26 enable
	18	UCK2	Serial clock for TX-RX unit
	19	UDA2	Serial data for TX-RX unit
	20	DREN	DRU-3 enable
	21	PLUL	TX-RX unit PLL unlock signal output
	22	PLEN	TX-RX unit PLL enable
	23	EOM	DRU-3 end of message signal output
	24	VBSY	VS-2 busy signal
	25	STR	VS-2 synthesize control signal
	26	GND	GND
CN8	1	GND	GND
	2	CTS	TX inhibit signal from TS-870S
	3	RTS	TX inhibit signal from personal computer
	4	RXD	TX data from TS-870S
	5	TXD	RX data from personal computer
	6	KEYS	Key jack sensing signal
	7	DASH	Electronic keyer dash signal
	8	DOT	Electronic keyer dot signal
	9	GND	GND
	10	H0	DSP data bus
	11	H1	DSP data bus
	12	H2	DSP data bus
	13	H3	DSP data bus
	14	H4	DSP data bus
	15	H5	DSP data bus
	16	H6	DSP data bus
	17	H7	DSP data bus
	18	HENA	DSP A enable signal
	19	HENB	DSP B enable signal
	20	HRW	DSP read/write control signal
CN9	1	14A	Analog 13.8V
	2	8D	Digital 8V
	3	14S	13.8V
	4	8A	Analog 8V
	5	APG	GND
CN10	1	SPI1	AF input when headphone through
	2	SPG	GND
	3	SPO1	Headphone AF output
CN11	1	GND	GND
	2	14S	13.8V
	3	8A	Analog 8V
	4	RXC	RX : "L"
	5	TXC	TX : "H"
	6	AGC	AGC voltage
	7	CKY	Keying signal
	8	SPO1	Speaker signal output
CN12	1	SPO3	Internal speaker AF output
	2	SPG	GND

TERMINAL FUNCTION

CN No.	Pin No.	Name	Function
CN13	Coaxial	REF	20MHz reference signal for PLL, DPS (From PLL)
J1	1	GND	GND
EXT.SP	2	NC	
	3	NC	
	4		External speaker signal output
	5		Signal input when external speaker not connected
J2	1	GND	GND
Paddle	2	NC	
	3	NC	
	4	NC	
	5	DASH	Electronic keyer dash signal
	6	DOT	Electronic keyer dot signal
	7	NC	
	8	NC	
	9	NC	
	10	KEYS	Key switch signal
	11	KEYS	Open when using paddle
J4	1		GND
RTTY	2		RTTY signal
	3		GND
	4		RTTY signal
J5	1	NC	
ACC2	2	NC	
	3	ANO	RX audio output
	4	GND	ANO GND
	5	PSQ	Squelch open : GND, Squelch close : open
	6	SMET	S-meter voltage output
	7	NC	
	8	GND	GND
	9	PKS	Standby switch when using PKD input (Front panel microphone input is muted)
	10	NC	
	11	PKD	TX input
	12	GND	PKD GND
	13	SS	Standby switch

CN No.	Pin No.	Name	Function
J6	1	GND	GND
KEY	2	GND	GND
	3	KEYS	Key jack sensing signal
	4	NC	
	5	KEY	Key down signal
J7	1	GND	GND
COM	2	NC	
	3	TXD	RX data from personal computer
	4	RXD	TX data from TS-870S
	5	NC	
	6	NC	
	7	CTS	TX inhibit signal from TS-870S
	8	RTS	TX inhibit signal from personal computer
	9	NC	
LCD ASSY (B38-0736-05)			
CN1	1	GND	GND
	2	DIM	LCD dimmer control signal
	3	BLANK	LCD goes off control signal
	4	UCK1	LCD driver control serial clock
	5	UDA1	LCD driver control serial data
	6	ENL3	LCD driver control enable signal
	7	ENL2	LCD driver control enable signal
	8	14D	Digital 13.8V
	9	14D	Digital 13.8V
	10	5D	Digital 5V

TS-870S PC BOARD VIEWS

LCD ASSY (B38-0736-05)
Component side view

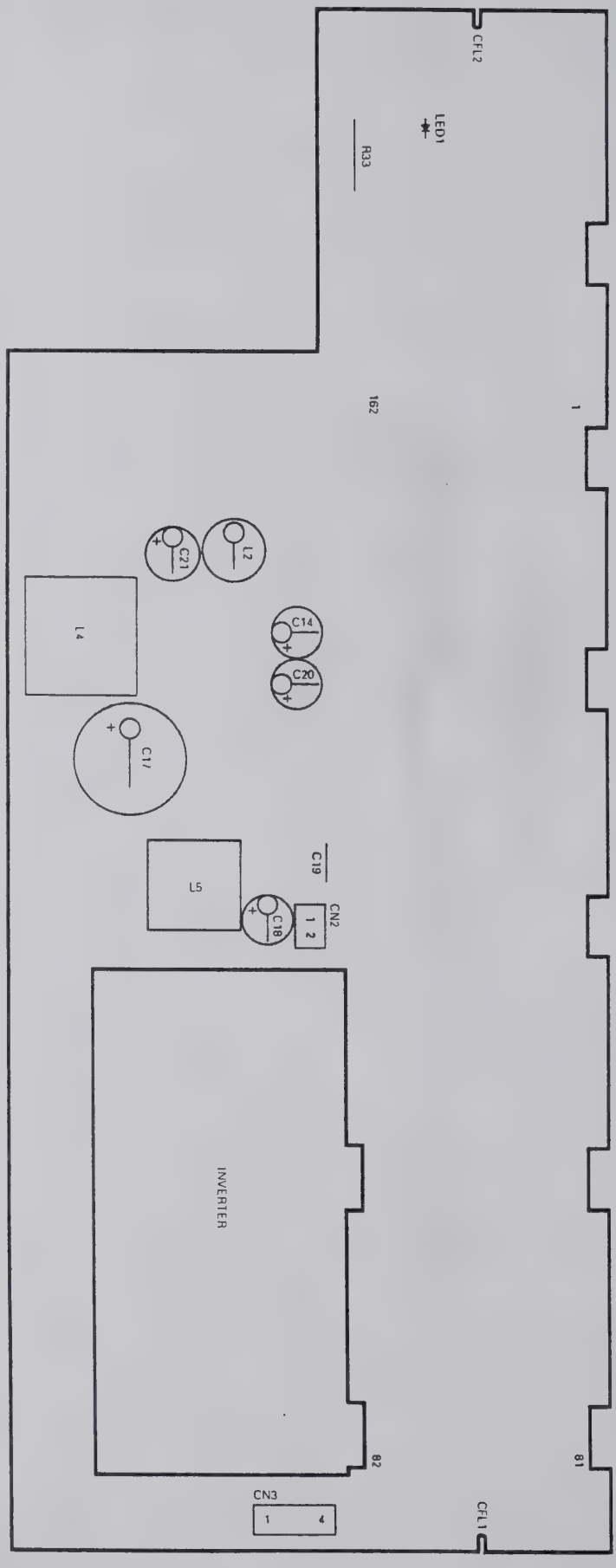

LCD ASSY (B38-0736-05)
Foil side view

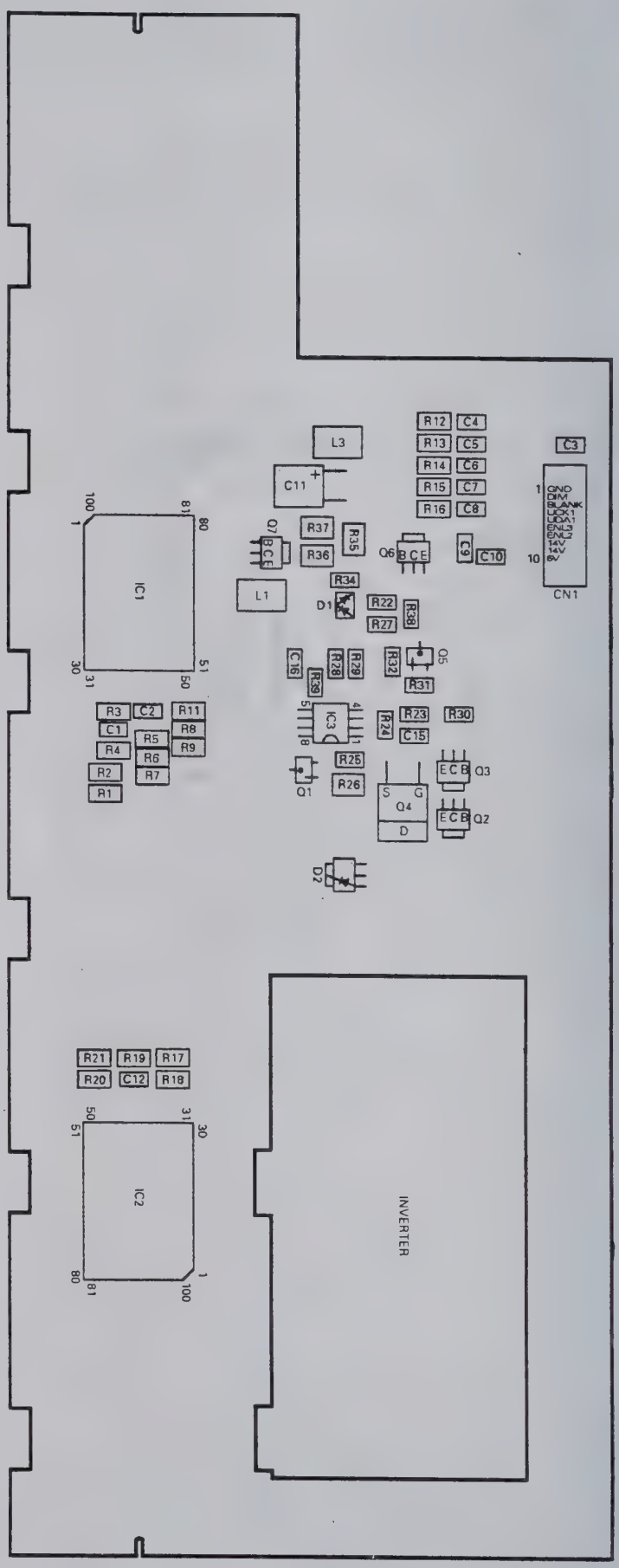

RF UNIT (X44-3210-00) (C/9)
Component side view

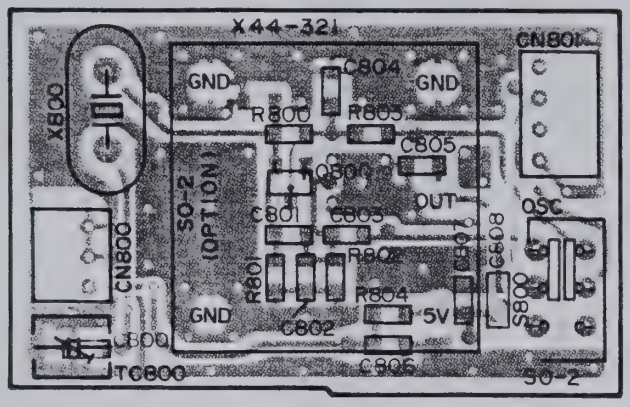

RF UNIT (X44-3210-00) (C/9)
Foil side view

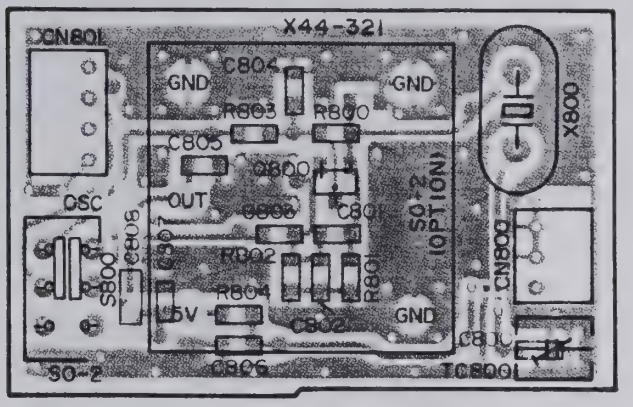

Component side
Foil side

VCO2 (X58-3390-03)
Component side view

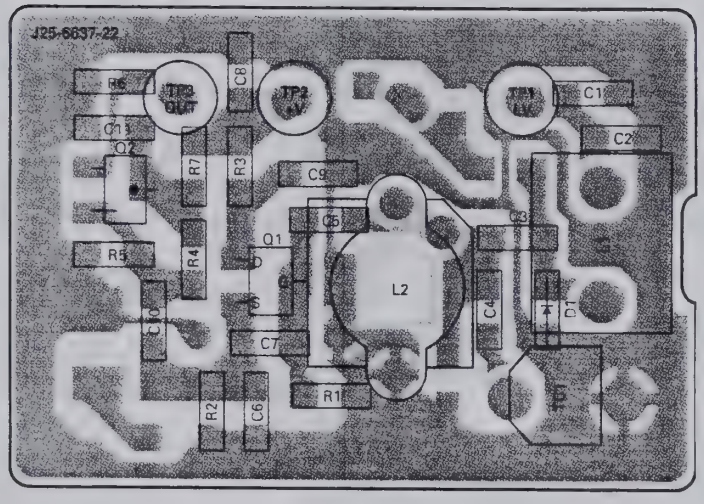

VCO2 (X58-3390-03)
Foil side view

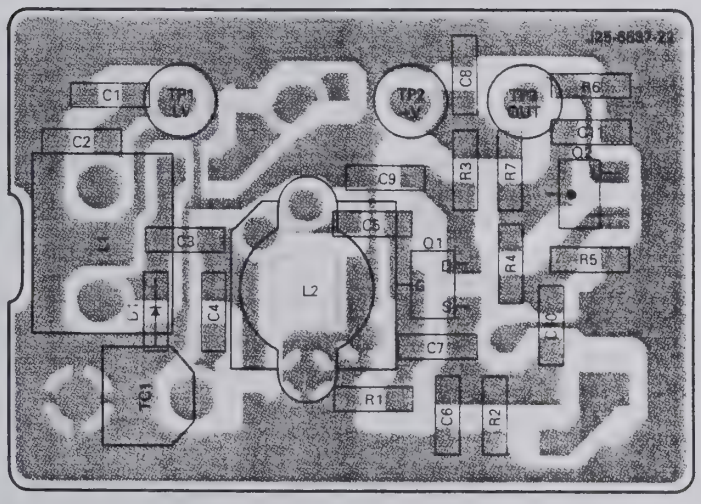

PC BOARD VIEW

FINAL UNIT (X45-351X-XX) (A/5) : FINAL

Component side view

0-00 : K,P,M,M2,X

2-71 : E,E2,E3,E9

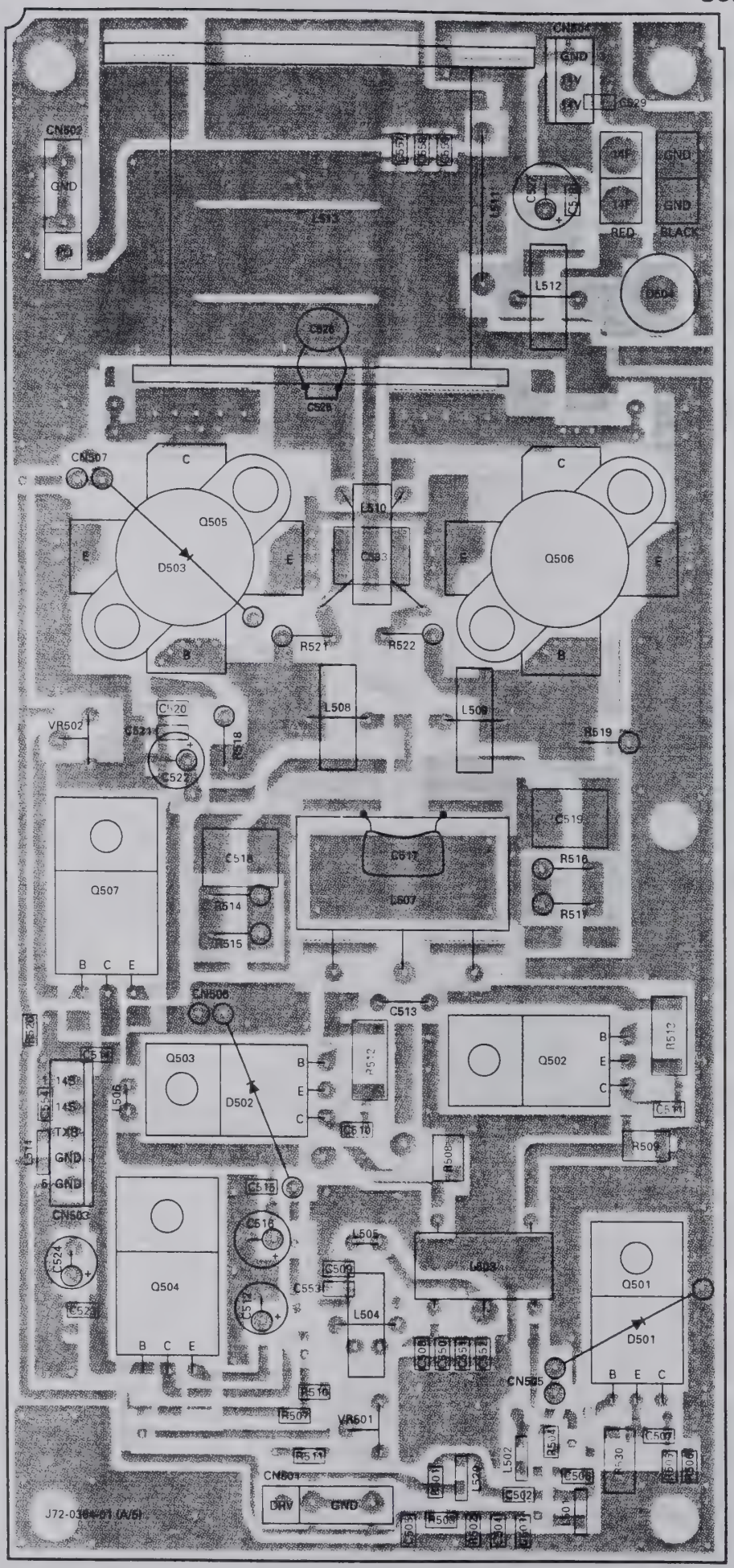

Component side

Foil side

FINAL UNIT (X45-351X-XX) (A/5) : FINAL
Foil side view
0-00 : K,P,M,M2,X
2-71 : E,E2,E3,E9

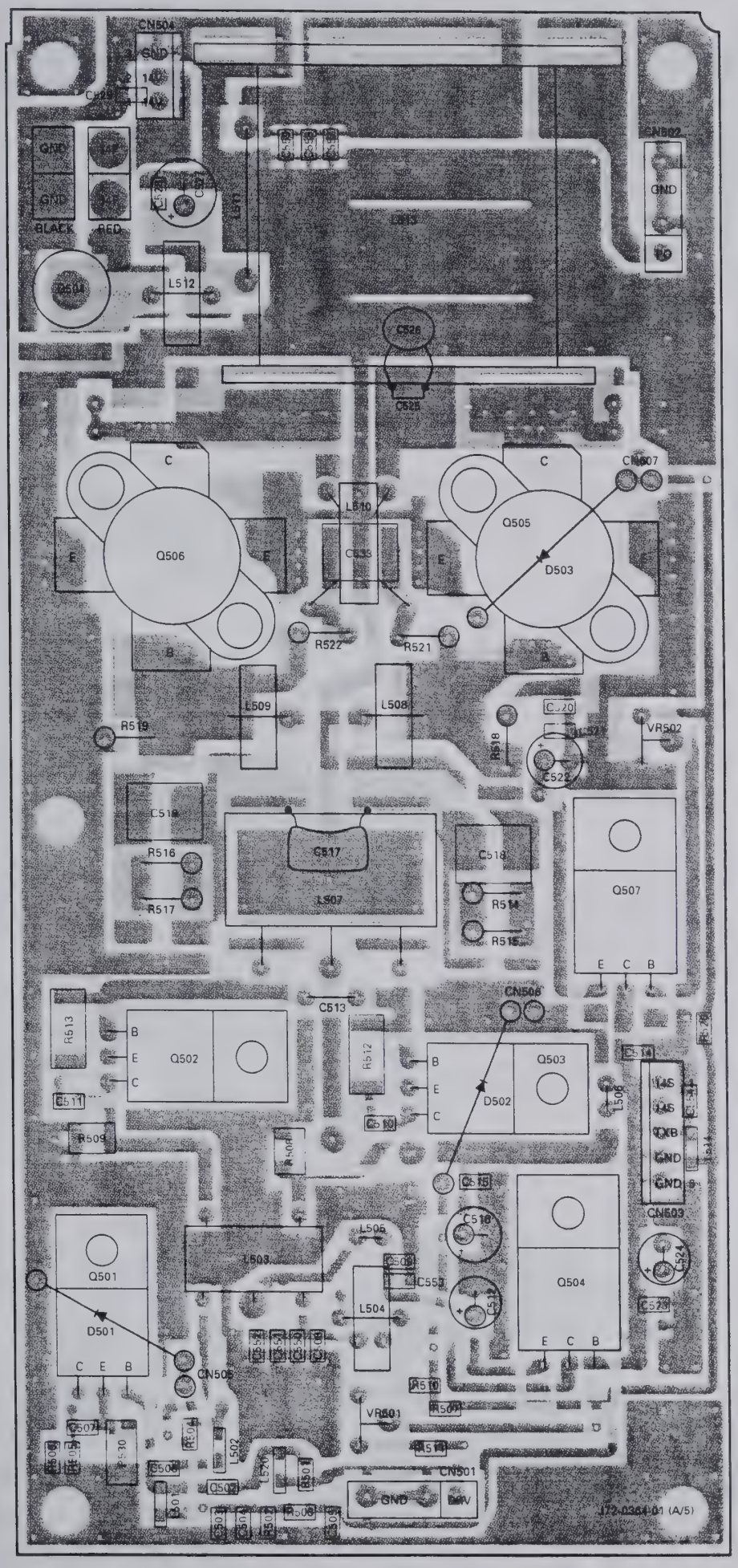

Component side
Foil side

TS-870S PC BOARD VIEW

FINAL UNIT (X45-351X-XX) (B/5) : FILTER

Component side view 0-00 : K,P,M,M2,X 2-71 : E,E2,E3,E9

Component side
Foil side

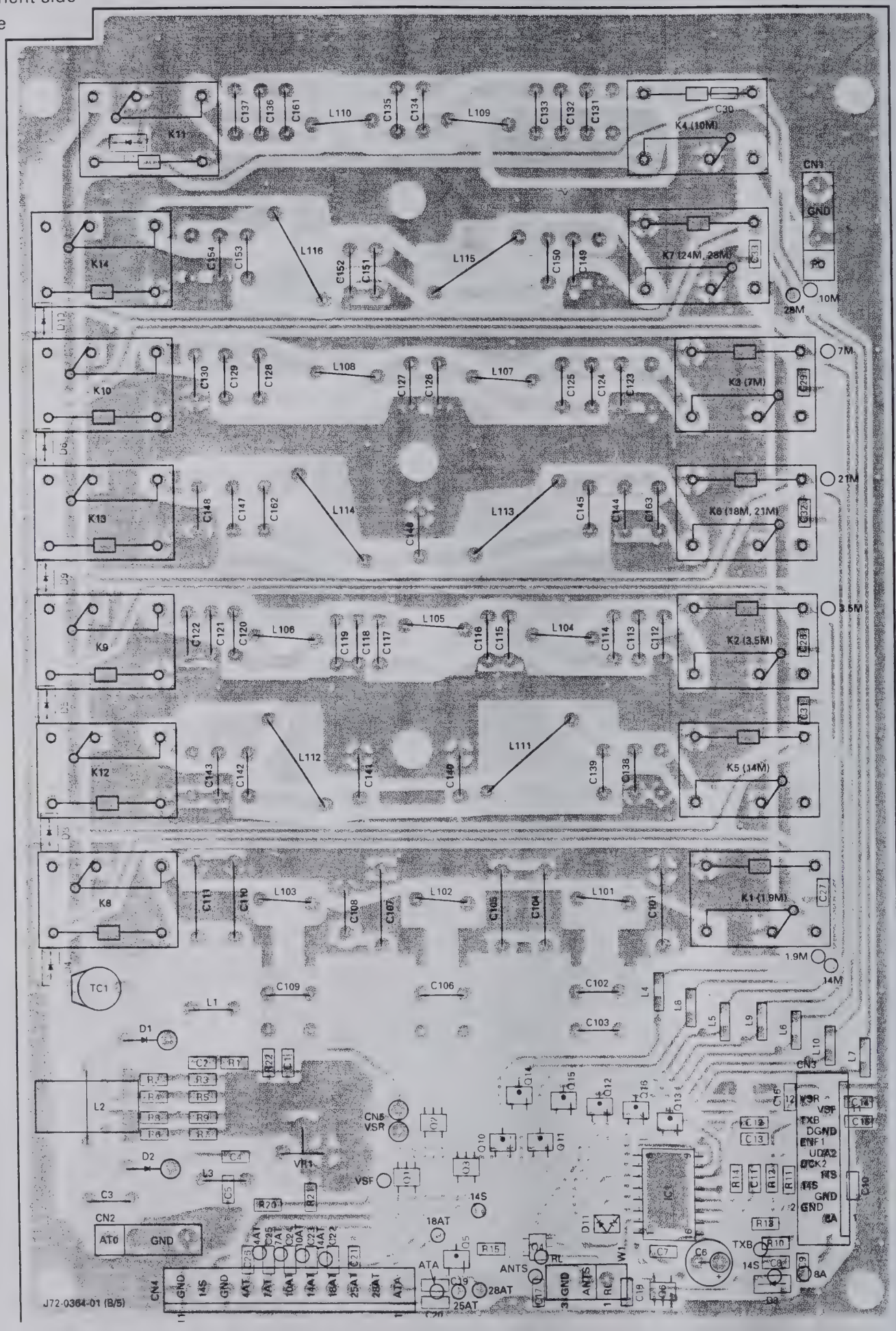

FINAL UNIT (X45-351X-XX) (B/5) : FILTER

Foil side view 0-00 : K,P,M,M2,X 2-71 : E,E2,E3,E9

Component side
Foil side

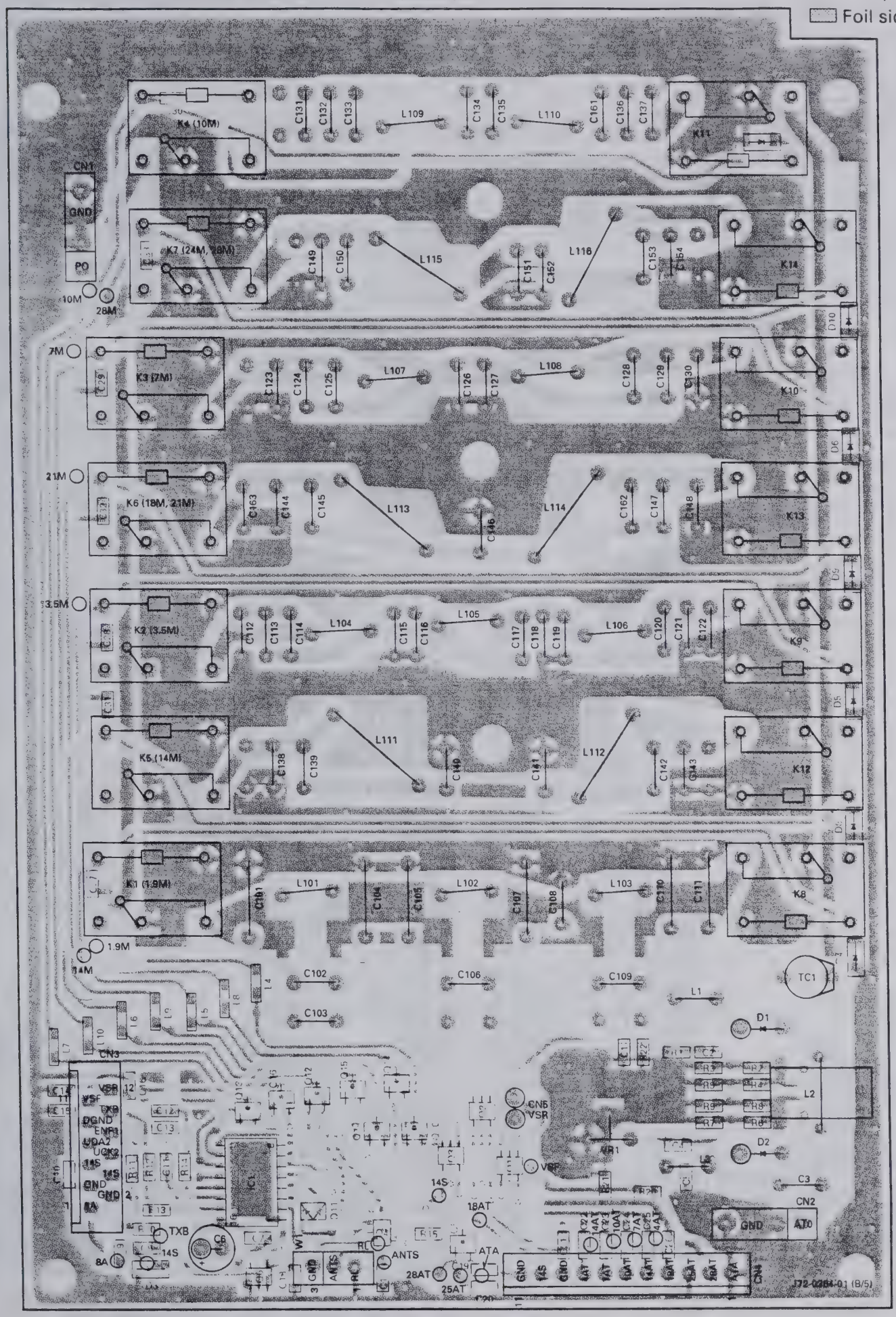

FINAL UNIT (X45-351X-XX) (D/5) : AVR
Component side view
0-00 : K,P,M,M2,X
2-71 : E,E2,E3,E9

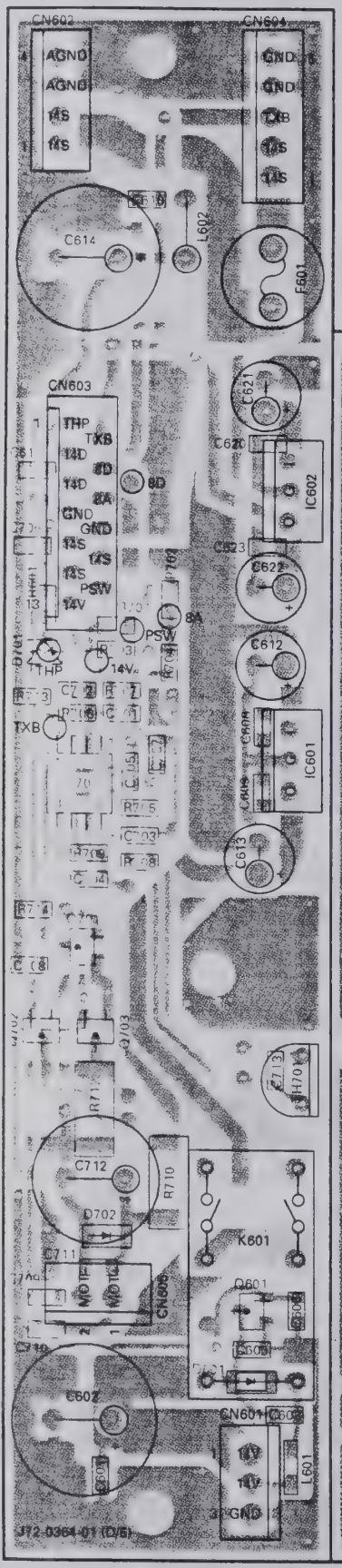

FINAL UNIT (X45-351X-XX) (E/5) : RELAY
Component side view
0-00 : K,P,M,M2,X
2-71 : E,E2,E3,E9

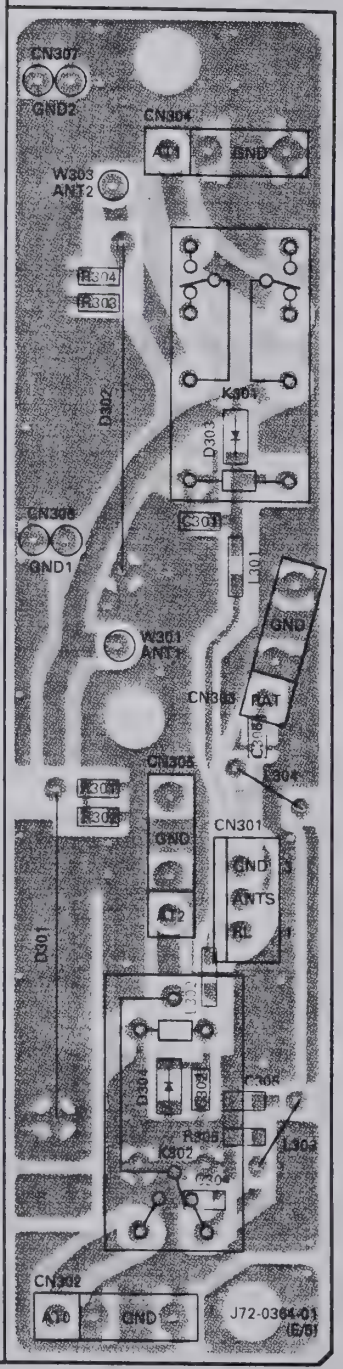

FINAL UNIT (X45-351X-XX) (E/5) : RELAY
Foil side view
0-00 : K,P,M,M2,X
2-71 : E,E2,E3,E9

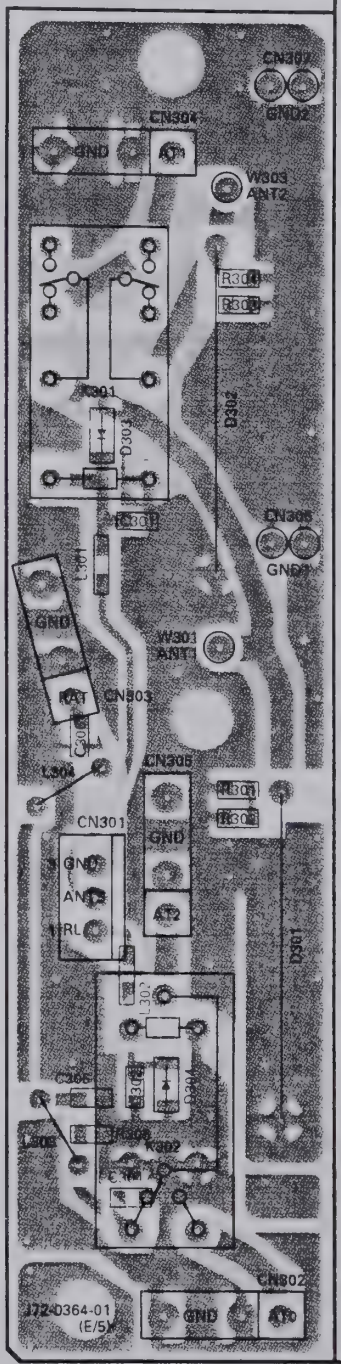

FINAL UNIT (X45-351X-XX) (D/5) : AVR
Foil side view
0-00 : K,P,M,M2,X
2-71 : E,E2,E3,E9

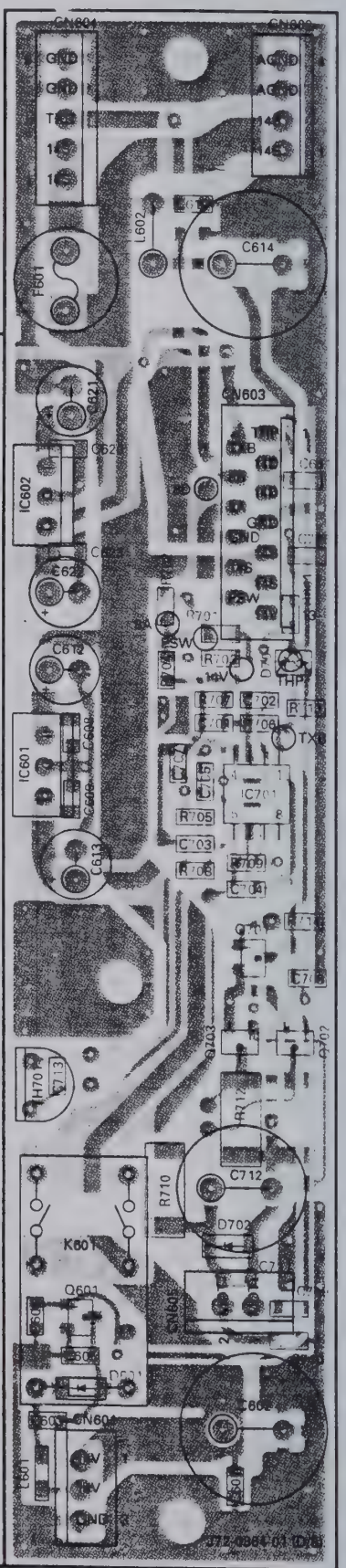

Component side
Foil side

TS-870S PC BOARD VIEWS

CONTROL UNIT (X53-356X-XX) (D/4) : MIC
Component side view
0-11 : K,P 0-21 : M 0-22 : M2 0-71 : X
2-71 : E 2-72 : E2 2-73 : E3 2-74 : E9

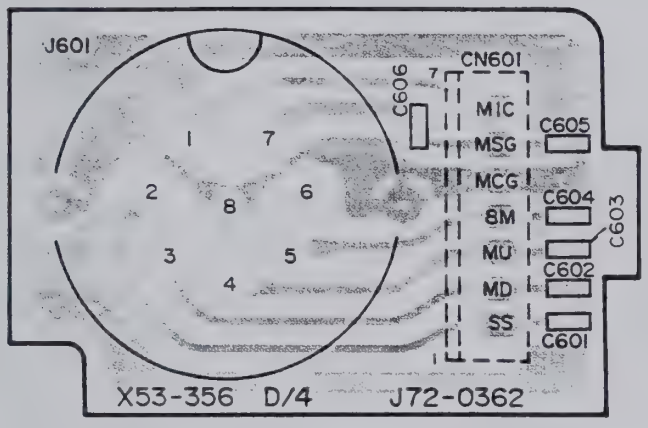

CONTROL UNIT (X53-356X-XX) (D/4) : MIC
Foil side view
0-11 : K,P 0-21 : M 0-22 : M2 0-71 : X
2-71 : E 2-72 : E2 2-73 : E3 2-74 : E9

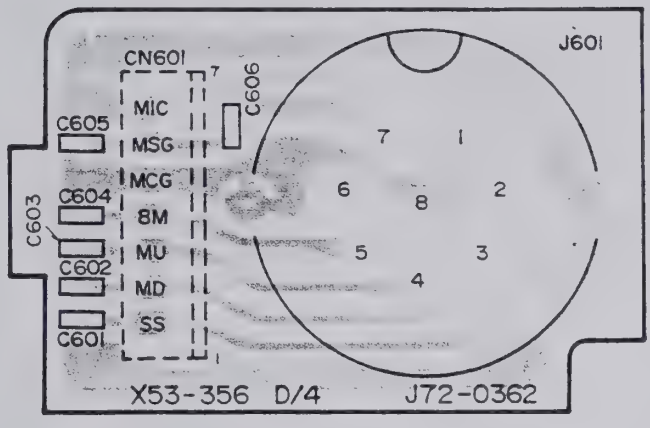

Component side
Foil side

FINAL UNIT (X45-351X-XX) (C/5)
: CONNECTION Foil side view

PC BOARD VIEW TS-870S

0-00 : K,P,M,M2,X
2-71 : E,E2,E3,E9

2SA1162
2SC2712

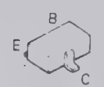

2SD1406

2SD1624

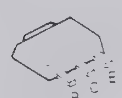

3SK131

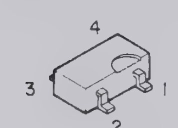

UPC7805H

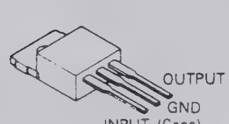

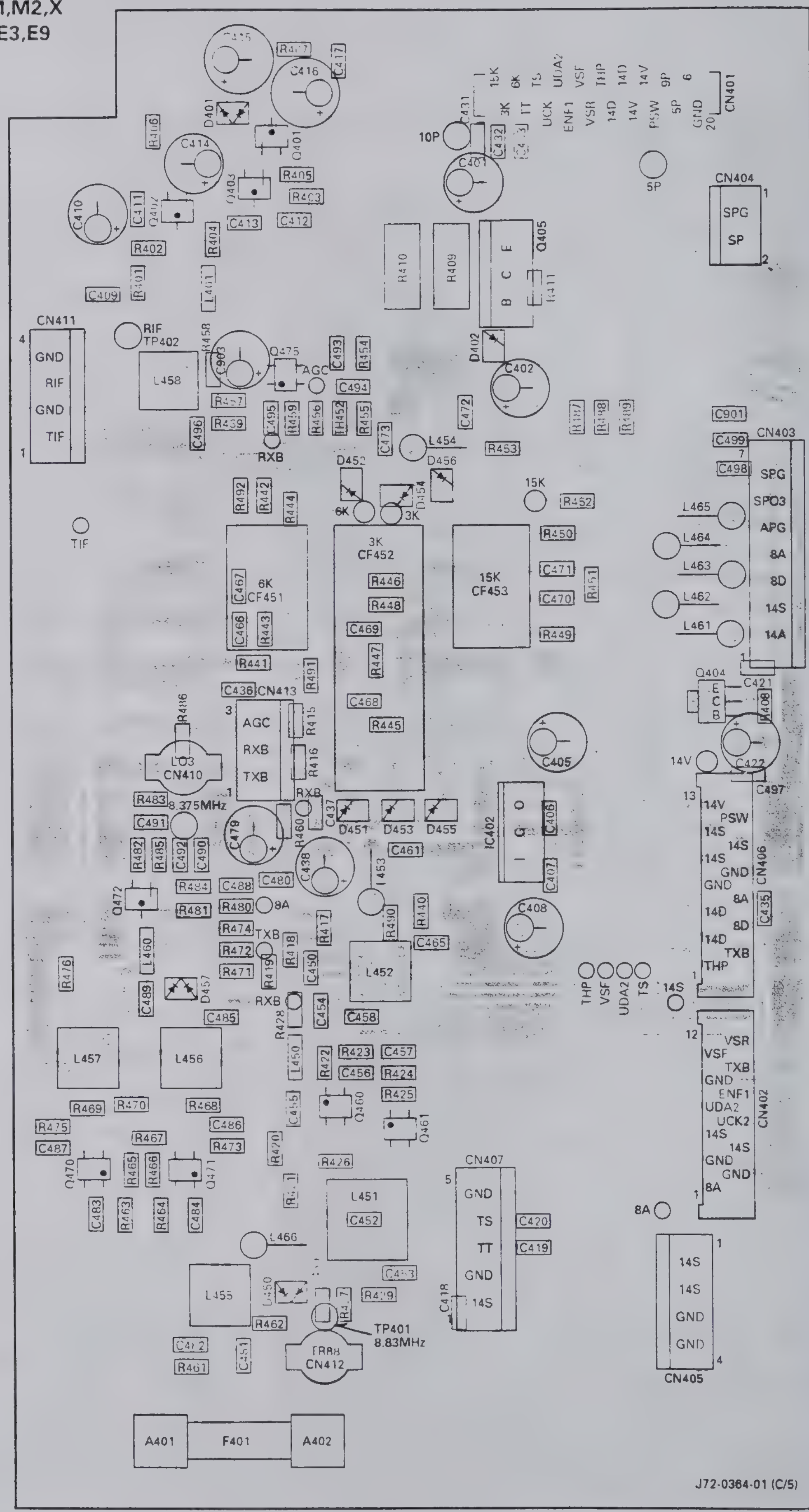

Component side
Foil side

DRU-3 (DIGITAL RECORDING UNIT)

DRU-3 Circuit Diagram

X43-3090-20

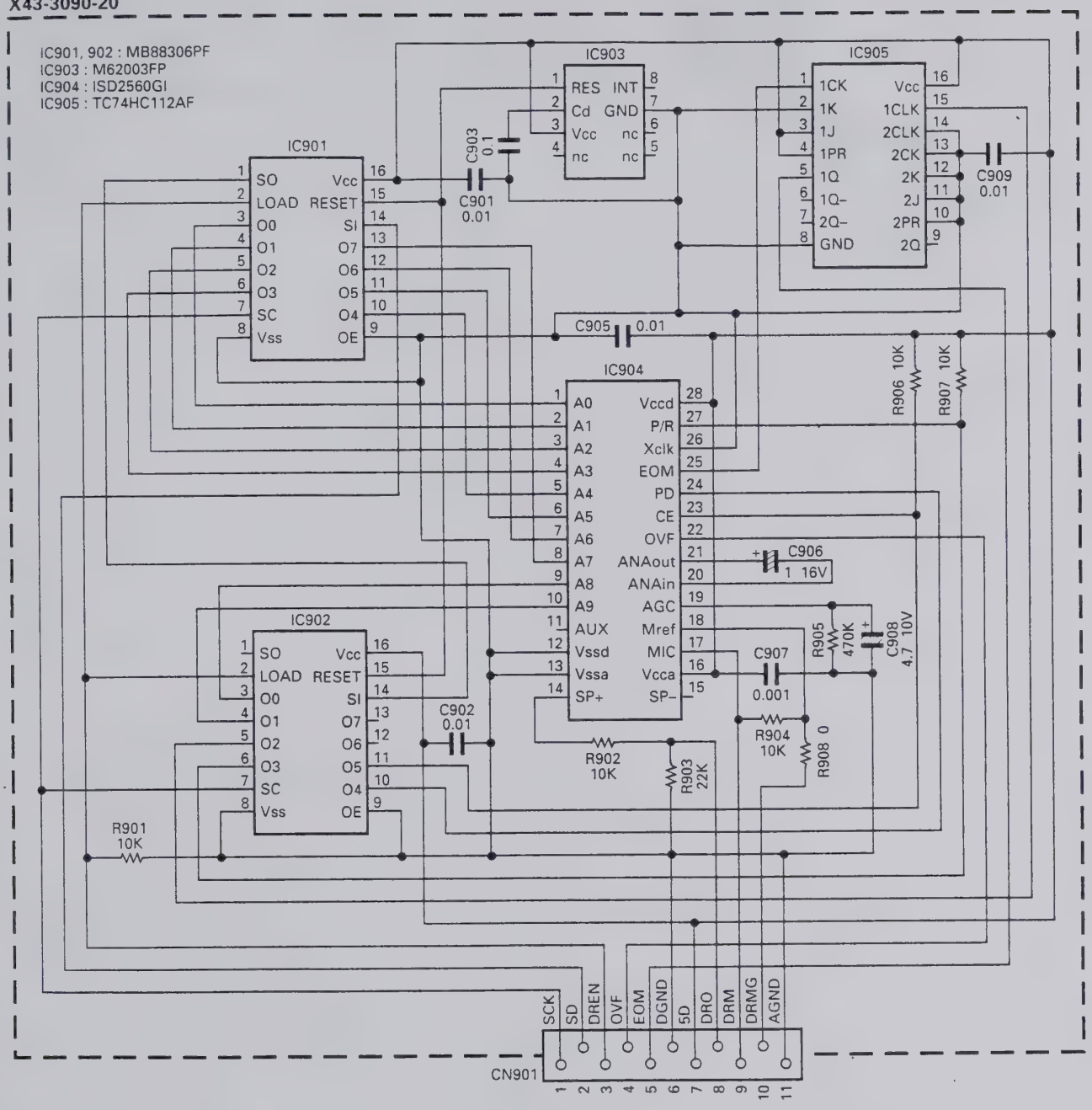

PG-2Z (DC CABLE)

PG-2Z External View

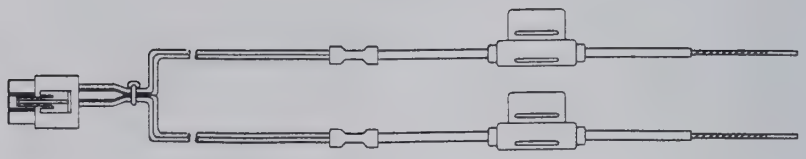

PG-2Z Parts List

Parts No.	New parts	Description
E30-3157-15		DC cable assy
F05-2531-05		Fuse (25A/32V)

SPECIFICATIONS

	Item			Rating
GENERAL	Mode			J3E (LSB, USB), A1A (CW), A3F (AM), F3E (FM), F1D (FSK)
	Number of memory channels			100
	Antenna impedance			50Ω (With Antenna Tuner 20 to 150Ω)
	Supply voltage			DC 13.8V ± 15%
	Grounding method			Negative ground
	Current	Transmit (Max.)		20.5A
		Receive (No signal)		2A
	Usable temperature range			–10°C to +50°C (+14°F to +122°F)
	Frequency stability (–10°C to +50°C)			Within ±10PPM
	Frequency accuracy (At room temperature)			Within ±10PPM
	Dimensions [W x H x D] (Projections included)			330 x 120 x 334 mm/13.0 x 4.72 x 13.1 in (339 x 135 x 375 mm/13.3 x 5.31 x 14.8 in)
	Weight			Approx. 11.5kg (25lbs)
TRANSMITTER	Frequency range	160m band		1.8*1 to 2.0*2MHz
		80m band		3.5 to 4.0*3MHz
		40m band		7.0 to 7.3*4MHz
		30m band		10.1 to 10.15MHz
		20m band		14.0 to 14.35MHz
		17m band		18.068 to 18.168MHz
		15m band		21.0 to 21.45MHz
		12m band		24.89 to 24.99MHz
		10m band		28.0 to 29.7MHz
	Output power*5	SSB, CW, FSK, FM	Max.	100W
			Min.	20W or less
		AM	Max.	25W
			Min.	20W or less
	Modulation	SSB		Balanced
		FM		Reactance
		AM		Low level
	Spurious emissions			–60dB or less
	Carrier suppression			50dB or more
	Unwanted sideband suppression (Modulation frequency 1.0kHz)			50dB or more
	Maximum frequency deviation (FM)	Wide		±5kHz or less
		Narrow		±2.5kHz or less
	Transmit frequency characteristics (–6dB) (TX lower cutoff : 300Hz, TX bandwidth : 2.3kHz)			300 to 2600Hz
	XIT shift frequency range			±9.99kHz
	Microphone imppedance			600Ω

*1 1.81MHz : Europe, France, Holland; 1.83MHz : Belgium, Spain

*2 1.85MHz : Belgium, France, Holland, Spain

*3 3.8MHz : Europe, Belgium, France, Holland, Spain

*4 7.1MHz : Europe, Belgium, France, Holland, Spain

*5 Belgium, Spain : 10W fixed on 160m band

TS-870S

SPECIFICATIONS

	Item			Rating
RECEIVER	Circuit type			Quadruple conversion superheterodyne
	Frequency range			100kHz to 30MHz
	Intermediate frequency			1st : 73.05MHz, 2nd : 8.83MHz, 3rd : 455kHz, 4th : 11.3kHz
	Sensitivity	SSB, CW, FSK (At 10dB (S+N)/N)	100kHz to 500kHz	1μV or less
			500kHz to 1.62MHz*6	4μV or less
			1.62MHz*6 to 24.5MHz	0.2μV or less
			24.5MHz to 30MHz	0.13μV or less
		AM (At 10dB (S+N)/N)	100kHz to 500kHz	2μV or less
			500kHz to 1.62MHz*6	31.6μV or less
			1.62MHz*6 to 24.5MHz	2μV or less
			24.5MHz to 30MHz	2μV or less
		FM (At 12dB SINAD)	28MHz to 30MHz	0.25μV or less
	Selectivity	SSB Lo : 300Hz, Hi : 2600Hz		–6dB : 2.3kHz, –60dB : 3.3kHz
		CW Width : 200Hz		–6dB : 200Hz, –60dB : 450Hz
		FSK Width : 500Hz		–6dB : 500Hz, –60dB : 1000Hz
		AM Lo : 100Hz, Hi : 4000Hz		–6dB : 9kHz, –60dB : 12kHz
		FM Width : 14kHz		–6dB : 14kHz, –60dB : 18kHz
	Image rejection (1.8MHz to 30MHz)			80dB or more
	1st IF rejection (1.8MHz to 30MHz)			80dB or more
	Notch filter atteneuation			40dB or more
	RIT shift frequency range			±9.99kHz
	Squelch sensitivity	SSB, CW, FSK, AM	100kHz to 500kHz	2μV or less
			500kHz to 1.62MHz*6	20μV or less
			1.62MHz*6 to 30MHz	2μV or less
		FM	28MHz to 30MHz	0.25μV or less
	Audio output (8Ω, 10% distortion)			1.5W or more
	Audio output impedance			8Ω

*6 1.705MHz : Canada, U.S.A.

Specifications are subject to change without notice or obligation due to ongoing technological developments.

KENWOOD CORPORATION
14-6, Dogenzaka 1-chome, Shibuya-ku, Tokyo 150, Japan

KENWOOD SERVICE CORPORATION
P.O. BOX 22745, 2201 East Dominguez Street, Long Beach, CA 90801-5745, U.S.A.

KENWOOD ELECTRONICS LATIN AMERICA S.A.
P.O. BOX 55-2791 Piso 6 Plaza Chase Cl. 47 y Aquilino de la Guardio Panama, Republic of Panama

KENWOOD ELECTRONICS CANADA INC.
6070 Kestrel Road, Mississauga, Ontario, Canada L5T 1S8

KENWOOD ELECTRONICS DEUTSCHLAND GMBH
Rembrücker Str. 15, 63150 Heusenstamm, Germany

KENWOOD ELECTRONICS BENELUX N.V.
Mechelsesteenweg 418 B-1930 Zaventem, Belgium

TRIO-KENWOOD FRANCE S.A.
13, Boulevard Ney, 75018 Paris, France

TRIO-KENWOOD U.K. LIMITED
KENWOOD House, Dwight Road, Watford, Herts., WD1 8EB United Kingdom

KENWOOD ELECTRONICS NEDERLAND B.V.
Amsterdamseweg 35, 1422 AC Uithoorn, The Netherlands

KENWOOD ELECTRONICS ITALIA S.p.A.
Via G. Sirtori, 7/9 20129 Milano, Italy

KENWOOD IBERICA S.A.
Bolivia, 239-08020 Barcelona, Spain

KENWOOD ELECTRONICS AUSTRALIA PTY. LTD.
(A.C.N. 001 499 074)
P.O. Box 504, 8 Figtree Drive, Australia Centre, Homebush, N.S.W. 2140, Australia

KENWOOD & LEE ELECTRONICS, LTD.
Unit 3712-3724, Level 37, Tower one Metroplaza, 223 Hing Fong Road, Kwai Fong, N.T., Hong Kong

HF TRANSCEIVER

TS-870S

SERVICE MANUAL

KENWOOD

© 1995-8 PRINTED IN JAPAN
B51-8296-00(N) 1360

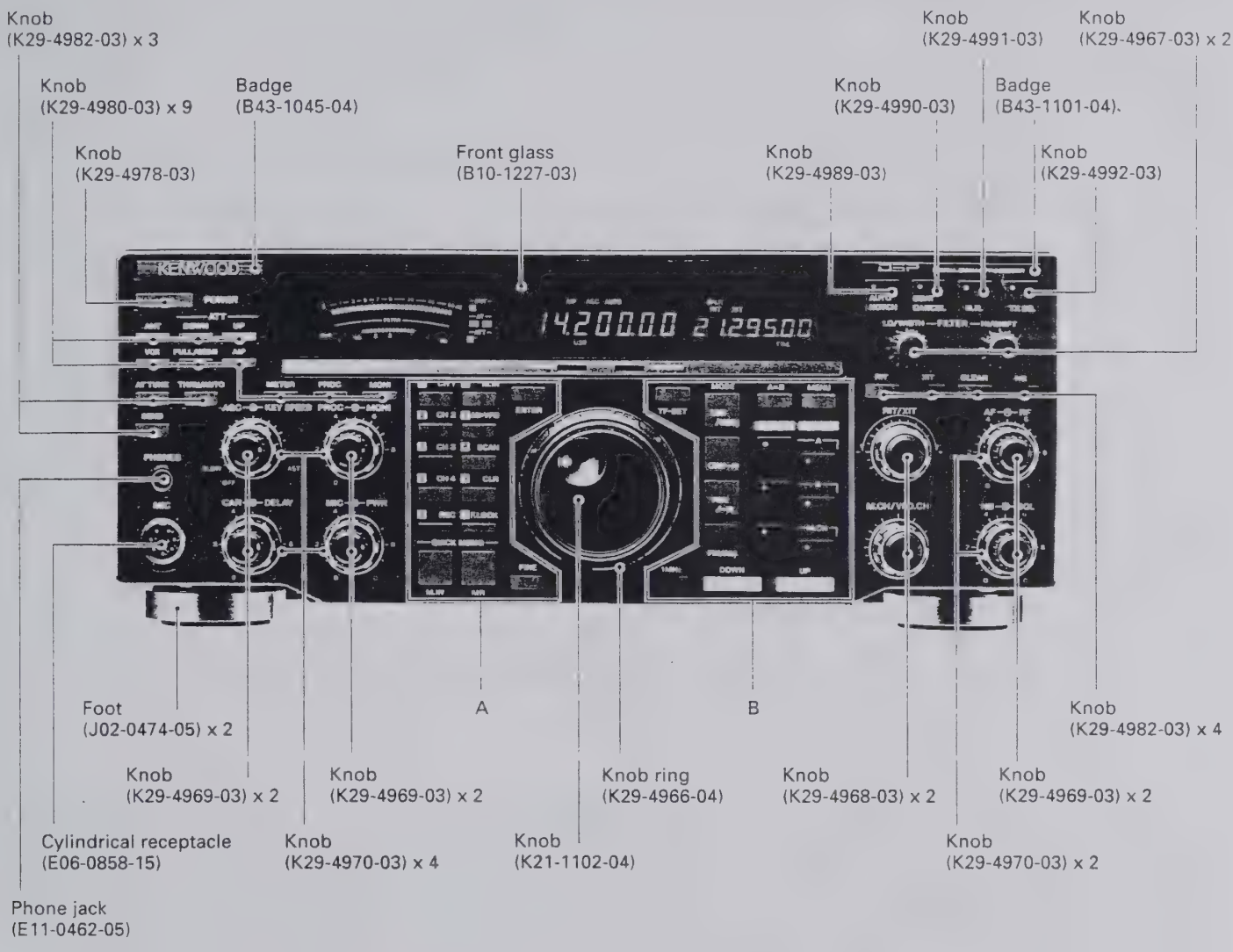

A

Knob (K29-4982-03)	Knob (K29-4982-03)	Knob (K29-4982-03)
Knob (K29-4982-03)	Knob (K29-4982-03)	
Knob (K29-4982-03)	Knob (K29-4982-03)	
Knob (K29-4982-03)	Knob (K29-4982-03)	
Knob (K29-4980-03)	Knob (K29-4980-03)	
Knob (K29-4984-03)	Knob (K29-4984-03)	Knob (K29-4982-03)

B

Knob (K29-4982-03)	Knob (K29-4985-03)	Knob (K29-4982-03)	Knob (K29-4982-03)
	Knob (K29-4986-03)	Knob (K29-4983-03)	Knob (K29-4981-03)
	Knob (29-4987-03)	Knob (K29-4983-03)	Knob (K29-4981-03)
	Knob (K29-4988-03)	Knob (K29-4983-03)	Knob (K29-4981-03)
Knob (K29-4982-03)	Knob (K29-4979-03)		Knob (K29-4979-03)

CONTENTS

CIRCUIT DESCRIPTION 3
DESCRIPTION OF COMPONENTS 45
SEMICONDUCTOR DATA 53
PARTS LIST 58
EXPLODED VIEW 81
PACKING 88
ADJUSTMENT 89
TERMINAL FUNCTION 104
CIRCUIT DIAGRAMS / PC BOARD VIEWS
- LCD ASSY (B38-0736-05) 110
- RF UNIT (X44-3210-00) (A/9) : RF 113
- RF UNIT (X44-3210-00) (B/9) : PLL 117
- RF UNIT (X44-3210-00) (C/9) 127
- VCO2 (X58-3390-03) 127
- FINAL UNIT (X45-351X-XX) (A/5) : FINAL 128
- FINAL UNIT (X45-351X-XX) (B/5) : FILTER 130
- FINAL UNIT (X45-351X-XX) (D/5) : AVR 132
- FINAL UNIT (X45-351X-XX) (E/5) : RELAY 132
- AT UNIT (X53-3340-02) (A/2) 137
- AT UNIT (X53-3340-02) (B/2) 139
- CONTROL UNIT (X53-356X-XX) (A/4) : CONTROL 143
- CONTROL UNIT (X53-356X-XX) (B/4) : SW 147
- TX-RX UNIT (X57-4620-00) 155
- RF UNIT (X44-3210-00) (D/9) 169
- RF UNIT (X44-3210-00) (E/9) 169
- RF UNIT (X44-3210-00) (F/9) 170
- RF UNIT (X44-3210-00) (G/9) 170
- RF UNIT (X44-3210-00) (H/9) 171
- RF UNIT (X44-3210-00) (I/9) 171
- FINAL UNIT (X45-351X-XX) (C/5) : CONNECTION 172
- CONTROL UNIT (X53-356X-XX) (D/4) : MIC 174

SCHEMATIC DIAGRAM 175
BLOCK DIAGRAM 179
LEVEL DIAGRAM 183
DRU-3 (DIGITAL RECORDING UNIT) 185
PG-2Z (DC CABLE) 188
SPECIFICATIONS 189

CIRCUIT DESCRIPTION

Frequency Configuration

The TS-870S is quadruple conversion in receive mode. As a transmitter, it is quadruple conversion in non-FM modes and double conversion in FM mode.

The fourth 11.3kHz IF signal is converted from analog to digital, connected to the DSP in receive mode, and decoded. In transmit mode, the microphone input signal is converted from analog to digital and applied to the DSP. It is converted from digital to analog, passed through a mixer, and becomes the 455kHz TIF signal. In FM mode, however, only 455kHz carriers are output from the DSP.

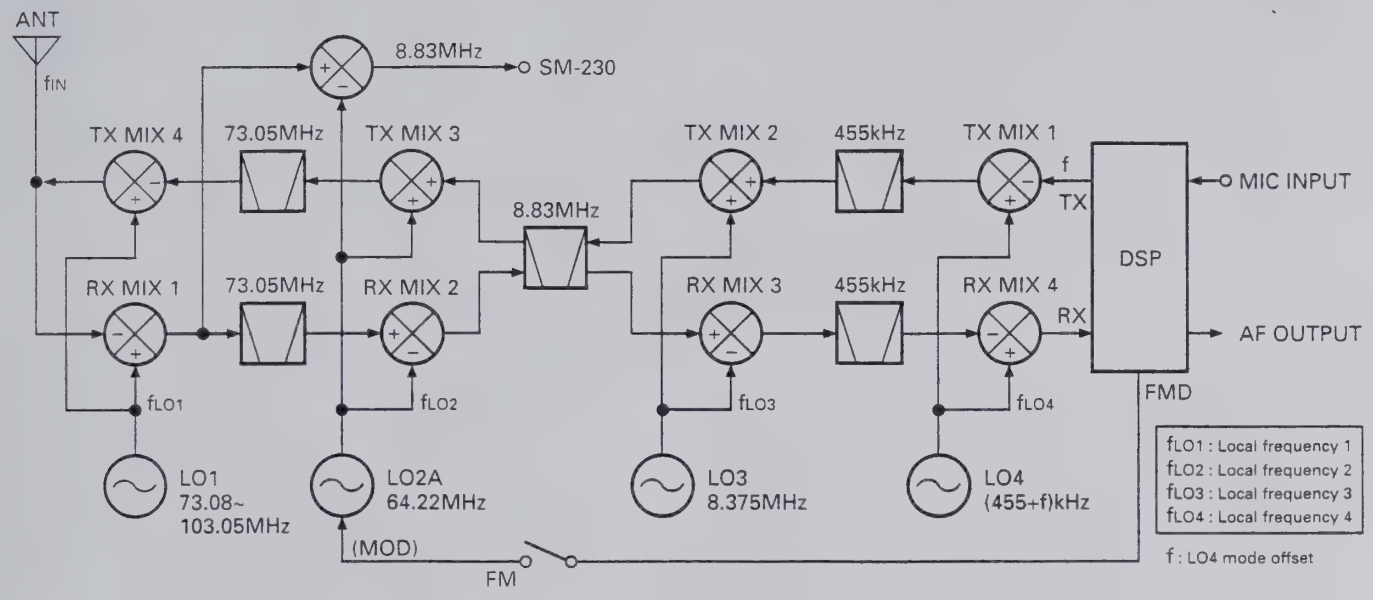

Fig. 1 Frequency configutation

■ Frequency configuration

When the receiver frequency by fIN from the antenna in SSB mode is zero beat (namely, at zero to the SSB signal with a carrier point of fIN), the relationship between these signals is expressed by the following equation.

$$f_{IN} = f_{LO1} - f_{LO2} - f_{LO3} - f_{LO4} + f \quad \ldots . (1)$$

Since all these frequencies are generated by the PLL or DDS circuits as shown in the PLL block diagram in Figure 2, the receiver frequency is determined only by the reference frequency fSTD, the PLL dividing ratio and DDS data. Therefore, the reference frequency accuracy equals the operating frequency accuracy.

The accuracy of the reference oscillator used in the TS-870S is 10ppm (–10 to +50°C). If the temperature-compensated crystal oscillator (TCXO) SO-2 is used, the accuracy becomes 0.5ppm (–10 to +50°C).

The TS-870S local oscillator and CAR DDS are independent of each other. However, they can be operated like a cancel loop configuration by changing the CAR and local oscillator PLL data simultaneously via a microprocessor. This function allows a shift (fLO1, fLO3, fLO4) by the mode change to be performed and the band width of the slope tune to be varied (fLO1, fLO3, fLO4).

When used as a transmitter in SSB mode or in other modes, likewise the frequency is determined by the reference frequency fSTD and dividing ratio. The display frequencies in the modes are listed in Table 1. In the FSK mode, the TS-870S displays the mark transmitter frequency.

In CW mode, the TS-870S receiving pitch can be changed to the required frequency in 50Hz steps with the desired signal remaining in the center of the IF filter band-pass (Variable CW pitch system). Since the receiving pitch varies along with the transmitter side tone, it is possible to zero-beat by receiving the desired signal at the same pitch as the side tone.

FM transmission is obtained in this system by modulating the f_{LO2} via application of the audio signal from the microphone to the VCO2.

Mode	Display frequency
USB, LSB	Carrier point frequency
CW	Transmission carrier frequency
FSK	Mark transmitter frequency
AM, FM	IF filter center frequency

Table 1 Display frequency in each mode

PLL Circuit

The TS-870S PLL circuit consists of a PLL loop that includes DDS covering a frequency range between 30kHz to 30MHz in 10Hz or 1Hz steps in accordance with the 20kHz reference frequency; DDS that generates other local oscillators (LO3, LO4); and a PLL loop that produces LO2A.

The dividing ratio data to each PLL loop and the DDS data are controlled by a microprocessor. Each loop is controlled by a single crystal frequency control system according to the reference frequency f_{STD}. (See the PLL block diagram in Figure 2.)

■ Reference signal generation circuit

The reference frequency f_{STD} used for frequency control is determined by the 20MHz crystal oscillator (X800 and Q800 : 2SC2714). One reference frequency is output as the reference signal f_{REF} for the PLL and DDS in the PLL section. The other is sent to the TX-RX unit and used as the PLL reference signal for the PLL and DSP.

The crystal oscillator may be replaced by an optional TCXO (SO-2), and the TCXO may be switched to with slide switch S800.

If the optional TCXO (SO-2) is installed, the S800 switch must be set to the SO-2 position.

■ LO2 (PLL section)

Q1 : 2SK508NV in VCO2 (A501 : X58-3390-03) generates 64.22MHz. The 20MHz reference frequency f_{REF} is applied to pin 15 of IC509 : MB86001PF, and is divided internally by a factor of 1000 (4000 in FM mode) to produce a 20kHz (5kHz in FM mode) comparison frequency.

The VCO2 output is applied to pin 6 of IC509 : MB86001PF, and is internally divided by a factor of 3211 (12844 in FM mode). It is compared with the 20kHz (5kHz in FM mode) signal using the phase comparator. The VCO2 frequency is locked. The division ratio is transmitted from the control unit.

The output from PLL2 is passed through buffer Q539, amplified by amplifier Q532, passed through a low-pass filter, its impedance is converted, and is then output to the RF section as LO2A.

■ LO1 (PLL loop)

Four VCOs and uses Q520 to Q523 : 2SK508NV x 4 to generate 73.08MHz to 103.05MHz. The 20MHz reference frequency f_{REF} is applied to pin 15 of PLL IC IC507 : MB86001PF, and is internally divided by a factor of 20 to produce a 1MHz comparison frequency. The output is passed through amplifier Q524, and a band-pass filter. One output is passed through buffer Q526 : 2SC2996 and a low-pass filter and goes to the RF section.

The other output signal is passed through buffer Q525 : 2SC2714 and applied to pin 5 of mixer IC508 : SN76514. A signal of 54.54 to 55.54MHz is input to pin 11 of IC508 and converted to a signal of 18.0 to 48.0MHz. This signal is output from pin 13. The signal is passed through a high-pass filter, a low-pass filter, and amplifier Q531 : 2SC2714 and Q530 : 2SC2712, and goes to pin 6 of PLL IC IC507 : MB86001PF.

This signal is internally divided by N, and compared with the 1MHz signal using the phase comparator. The mixer output frequency is locked in 1MHz steps. The division ratio N is transmitted from the control unit as data (N : 18 to 48) corresponding to 0MHz to 30MHz in 1MHz steps. One of the four VCOs is selected according to the VCO change signal (VB0 to VB3) sent from the control unit.

CIRCUIT DESCRIPTION

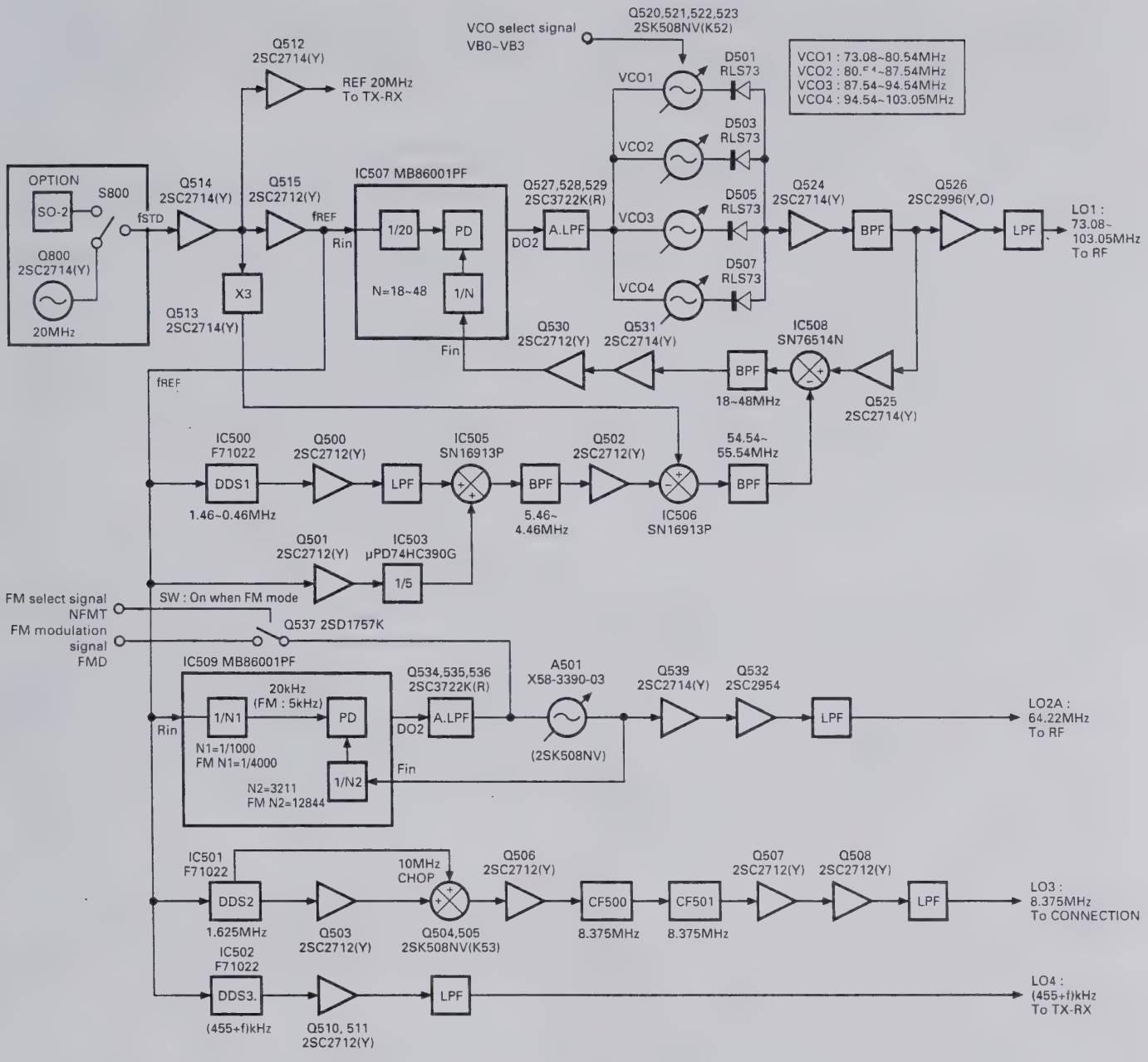

Fig. 2 PLL block diagram

CIRCUIT DESCRIPTION

DDS1 (IC500 : F71022) generates 1.46 to 0.46MHz digital signals. They are converted to analog signals by a digital to analog converter (consisting of CP500, CP501, and Q500), passed through a low-pass filter, and fed to pin 5 of mixer IC505 : SN16913P. The 4MHz signal produced by division of 20MHz reference frequency fREF by divider IC503 : UPD74HC390G by a factor of 5 is input to pin 2 of the mixer IC505, and a 5.46 to 4.46MHz signal is output from pin 1. The output signal is passed through a band-pass filter and buffer Q502, and input to pin 5 of mixer IC506 : SN16913P. The 60MHz signal obtained by tripling 20MHz reference frequency fREF via multiplying circuit Q515 is mixed, and a 54.54 to 55.54MHz signal is output. This signal is passed through a band-pass filter, and goes to pin 13 of mixer IC508.

DDS1 sweeps the 1.46 to 0.46MHz digital signal output in 10 or 1Hz steps, and LO1 covers the 73.08 to 103.05MHz signal in 10 or 1Hz steps and is output to the RF section.

■ LO3 generation

DDS2 (IC501 : F71022) generates a digital signal of the 1.625MHz basic frequency. It is converted to an analog signal by a digital-to-analog converter (consisting of CP502, CP503, and Q503), and chopped by a circuit consisting of Q503 to Q505 so as to extract an 8.375MHz primary harmonic component. Unwanted components are removed by a ceramic filter consisting of CF500 and CF501. The resulting signal is passed through amplifier Q507, buffer Q508, and a low-pass filter, and output to the connection section (final unit) as the LO3 signal.

■ LO4 generation

DDS3 (IC502 : F71022) generates a (455+f) kHz digital signal. It is converted to an analog signal by a digital to analog converter (consisting of CP504, CP505, and Q510), passed through buffer Q511 and a low-pass filter, and output to the TX-RX unit as the LO4 signal.

The LO4 signal is a local oscillator signal used to generate a DSP processing signal f from 455kHz. The f frequency is described in the local signal section (page 14).

■ Subtone generation

During FM transmission, the DSP generates a signal to which a subtone is added and is then sent to the main unit as it is.

■ PLL data

The TS-870S has three PLLs to which the main CPU sends PLL data based on the displayed frequency.

- PLL comprising a VFO (PLL section)
- Local oscillator PLL for frequency conversion (PLL section)
- PLL that generates timing clocks for digital signal processing (TX-RX unit)

The VCOs change with the following conditions.

- Main encoder change → VCO1 (PLL section)
- Mode change → VCO2 (PLL section)

Each PLL IC outputs an unlock signal. If any PLL is unlocked, the main display indicates "....." (dots). If the unlocked PLL is the TX-RX unit, the sub-display shows "Err-FD", and if it is the PLL unit, it shows "Err-FE" to indicate that it is unlocked.

The unlocking of each PLL is output to pin 11 (UL) of PLL IC : MB86001PF as unlock data (UNLOCK : LOW).

Loop	VCO No.	IC No.	Comparison frequency/divide ratio	Variable divide ratio	Frequency (MHz)
LO1	VCO1	IC507	1MHz/20	18~48	73.08~103.05
LO2	VCO2	IC509	20kHz/1000 5kHz/4000 : FM	3211 12844 : FM	64.22

CIRCUIT DESCRIPTION

■ DDS circuit configuration

The DDS IC has been developed with standard cells to implement a high-speed operation circuit and large-capacity ROM at a low cost.

1) IC configuration

The IC consists of the following components:

Two 28 bit registers for setting frequency data, one 28 bit frequency shift register for addition to the frequency register, a 23 bit parallel signal input section for frequency modulation with a parallel signal, and a data entry and selection section.

Frequency modulation section comprised of a 28 bit adder that adds frequency data and frequency modulation data

Phase data operation section that adds data from the frequency modulation section with the 28 bit phase data register

SIN-ROM that converts phase data to sine data.

2) Frequency/shift data setting

Using serial signals synchronized with clock pulses, a total of 30 bits (2 bits that specify the destination to which data are set and 28 bits for frequency data) are set in three internal registers.

3) Frequency register selection

The data set in the two frequency registers are selected by the SLAB input of the DDS IC. This pin handles the TXC signal. This function eliminates the need for the TS-870S microprocessor to set frequency data for each transmission and reception.

4) Frequency data selection

The SPSL input of the DDS IC selects whether to use the data in the internal frequency shift register or the data from parallel input as frequency modulation data.

5) Frequency modulation

The MDEN input of the DDS IC enables or disables frequency modulation. When frequency modulation is enabled, frequency data is added, and the result is input to the phase data operation section.

6) Phase data operation

The target frequency phase data is output by accumulating 28 bit frequency data in the 28 bit phase accumulator.

$Fout = Fs/2^{28} \cdot Dsum$

Fs : DDS IC input frequency/2

Dsum : Frequency data+Frequency modulation data

If 2^{25} is set for Dsum when 1/8 Fs is output, the phase data must be increased by $\pi/8$.

A 28 bit absolute value operation has been used here, but a 28 bit signed operation can also be used, assuming that the MSB is a sign. If complement data of 8000000 to FFFFFFFF (hex) is set, the phase moves in the negative direction for the positive data.

7) SIN-ROM

Phase data from the phase data operation section is converted to sine data of 0000 to FFFF (hex) in the 16 bit offset binary format.

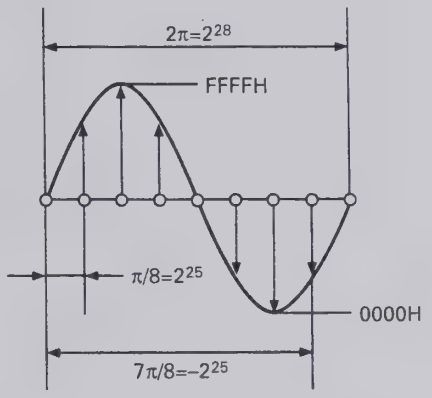

CIRCUIT DESCRIPTION

Receiver Circuit

The basic configuration of the receiver circuit is quadruple conversion. After the frequency is converted to the 11.3kHz fourth IF, the DSP carries out AGC, filtering, detection, and signal processing. Figure 3 is a receiver block diagram.

The signal coming from the antenna connector is passed through the antenna switching relay (K301) in the final unit (E/5 relay section), the antenna tuner unit, and the transmit/receive changeover relay (K302) within the relay section, and then goes to the CN2 (RAT) of the RF unit (A/9 RF section).

The signal input to the RF unit is passed through protection lamp PL1 for strong signal input, external receiver power distribution circuit L1 and L2 and switching circuit K1, and is input to the ATT (–6dB, –12dB) circuit. This distribution circuit is switched when the EXT RX (function that distributes the signals from the antenna to the external receiver), which is set from menu No.53, is turned ON. When this function is ON, the signal from the antenna is attenuated by about 4dB and output to the receiver section in the subsequent stage and the EXT RX terminal on the rear. The signal to the EXT RX terminal is passed through lamp PL2 for protection during transmission. The lamp turns OFF when about 10W is input.

The signal is passed through the ATT switching circuit, then goes to the BC band attenuation circuit (L7 to L9, C19 to C22). The BC band signal is attenuated by 5 to 10dB to prevent power saturation of the band-pass filter switching diode resulting from interference from a proximate station. The band-pass filter consists of two low-pass filters and 10 band-pass filters, and passes signals during transmission. The pin diode (1SV128) is used to change the input to raise the signal saturation level when a HIGH signal is input.

The RF amplifier circuit functions as a low-gain amplifier using Q14 and Q15 : 2SK2218(5) x 2 when the frequency is 21.49MHz or lower, and it functions as a high-gain amplifier using Q13 : 3SK131(M) when the frequency is higher than 21.49MHz. It is bypassed when AIP is ON.

The 73.05MHz first IF signal is generated by quad mixer Q17 to Q20 : 2SK520(K44) x 4. It is passed through XF1 73.05MHz MCF, Q24 : 3SK131(M) first mixer amplifier, and Q26 and Q27 : 2SK520(K43) mixer to produce a 8.83MHz second IF signal. The second IF signal is divided into two signals, one of which is branched to the noise blanker, amplified by amplifier Q28, and then goes to the NB circuit. The other signal is input to the second IF signal amplifier, and serves as a blanking gate by the NB and RBK signals. The amplified second IF signal is passed through the 8.83MHz IF filter, and output to the final unit (C/5 connection section) from CN10. This signal is switched with the diode switch D62 and D68, and functions as a second IF signal output during reception and a third IF signal input during transmission.

The second IF signal input to CN412 in the final unit (C/5 connection section) is routed to the receiver circuit by D450, and input to the mixer Q460 and Q461 to generate a 455kHz third IF signal. It is passed through the 455kHz IF filter, amplified by third IF amplifier Q475, and output by CN411 to the TX-RX unit as RIF signal. The total gain of the receiver unit is adjusted by VR1 in the TX-RX unit.

CIRCUIT DESCRIPTION

■ IF filter

The IF filter consists of a DSP digital filter. If there is a HIGH signal outside the DSP filter band, the analog to digital converter input level may be saturated, and the filter does not work properly. Thus, an analog filter is inserted between the second IF (8.83MHz) and the third IF (455kHz) so that it does not impair the DSP filter properties. To operate each filter properly, there are three kinds of filters for each IF signal and also slope tuning is carried out.

1) Filters characteristics

Item	Rating
Nominal center frequency	73.05MHz
Pass bandwidth	±7.5kHz or more at 3dB
Attenuation bandwidth	±30kHz or less at 40dB
Ripple	1.0dB or less
Insertion loss	3.0dB or less
Guaranteed attenuation	70dB or more at fo + (500 to 1000kHz) 70dB or more at fo – (200 to 1000kHz)
Center frequency deviation	Within ±1.5kHz at 3dB
Terminating impedance	2kΩ ± 10%

MCF (L71-0401-05) : RF unit XF1

Item	Rating
Nominal center frequency	8830kHz
Center frequency deviation	Within ±150Hz at 6dB
Pass bandwidth	±1.5kHz or more at 6dB
Attenuation bandwidth	±1.9kHz or less at 20dB ±2.75kHz or less at 60dB ±3.5kHz or less at 80dB
Ripple	2dB or less
Insertion loss	6dB or less
Guaranteed attenuation	80dB or more in the range ±3.5kHz to ±1MHz
Terminating impedance	600Ω / 15pF

MCF (L71-0235-05) : RF unit XF2

Item	Rating
Nominal center frequency	8830kHz
Pass bandwidth	±3.0kHz or more at 6dB
Attenuation bandwidth	±16.0kHz or less at 60dB ±13.0kHz or less at 50dB
Guaranteed attenuation	70dB or more with in fo ± 1MHz (Without spurious in the range fo to fo+500kHz)
Ripple	Within 1.0dB
Insertion loss	Within 1.5dB
Terminating impedance	1850kΩ / 2pF

MCF (L71-0266-05) : RF unit XF3

Item	Rating
Nominal center frequency	8.400MHz
3dB attenuation bandwidth	Within 180 ± 40kHz
20dB attenuation bandwidth	400kHz or less
Insertion loss	9.0dB or less Formula : 20 x log [E1÷ (2 x E2)]
Ripple	1.0dB or less (within 3dB band)
Spurious attenuation	25dB or more (6.0 to 10.0MHz)
Voltage capacity	50V DC (1 minute)
Insulating resistance	100MΩ or more (100V DC)
Input and output impedance	330Ω

Ceramic filter (L72-0343-05) : RF unit CF500, 501

Item	Rating
Nominal center frequency	455kHz
6dB bandwidth	±3kHz (455kHz)
50dB bandwidth	±9kHz (455kHz)
Ripple	2dB or less (within 455+2kHz)
Insertion loss	6dB or less
Guaranteed attenuation	60dB or more (within 455±100kHz)
Input and output impedance	2.0kΩ

Ceramic filter (L72-0319-05) : Final unit CF451

Item	Rating
Center frequency	455±0.20kHz
6dB bandwidth	2.9 to 3.2kHz
60dB bandwidth	4.7kHz or less
Guaranteed attenuation	60dB or more at 0.1 to 1MHz
Spurious	40dB or more at 600 to 700kHz
6dB band ripple	2dB or less
Insertion loss	6dB or less
Input and output impedance	2kΩ

Ceramic filter (L72-0333-05) : Final unit CF452

Item	Rating
Nominal center frequency	455kHz
6dB bandwidth	±7.5kHz or more (455kHz)
50dB bandwidth	±15kHz or less (455kHz)
Ripple	3dB or less (within 455+5kHz)
Insertion loss	6dB or less
Guaranteed attenuation	35dB or more (within 455±100kHz)
Input and output impedance	1.5kΩ

Ceramic filter (L72-0366-05) : Final unit CF453

CIRCUIT DESCRIPTION

Receiver Circuit

The basic configuration of the receiver circuit is quadruple conversion. After the frequency is converted to the 11.3kHz fourth IF, the DSP carries out AGC, filtering, detection, and signal processing. Figure 3 is a receiver block diagram.

The signal coming from the antenna connector is passed through the antenna switching relay (K301) in the final unit (E/5 relay section), the antenna tuner unit, and the transmit/receive changeover relay (K302) within the relay section, and then goes to the CN2 (RAT) of the RF unit (A/9 RF section).

The signal input to the RF unit is passed through protection lamp PL1 for strong signal input, external receiver power distribution circuit L1 and L2 and switching circuit K1, and is input to the ATT (–6dB, –12dB) circuit. This distribution circuit is switched when the EXT RX (function that distributes the signals from the antenna to the external receiver), which is set from menu No.53, is turned ON. When this function is ON, the signal from the antenna is attenuated by about 4dB and output to the receiver section in the subsequent stage and the EXT RX terminal on the rear. The signal to the EXT RX terminal is passed through lamp PL2 for protection during transmission. The lamp turns OFF when about 10W is input.

The signal is passed through the ATT switching circuit, then goes to the BC band attenuation circuit (L7 to L9, C19 to C22). The BC band signal is attenuated by 5 to 10dB to prevent power saturation of the band-pass filter switching diode resulting from interference from a proximate station. The band-pass filter consists of two low-pass filters and 10 band-pass filters, and passes signals during transmission. The pin diode (1SV128) is used to change the input to raise the signal saturation level when a HIGH signal is input.

The RF amplifier circuit functions as a low-gain amplifier using Q14 and Q15 : 2SK2218(5) x 2 when the frequency is 21.49MHz or lower, and it functions as a high-gain amplifier using Q13 : 3SK131(M) when the frequency is higher than 21.49MHz. It is bypassed when AIP is ON.

The 73.05MHz first IF signal is generated by quad mixer Q17 to Q20 : 2SK520(K44) x 4. It is passed through XF1 73.05MHz MCF, Q24 : 3SK131(M) first mixer amplifier, and Q26 and Q27 : 2SK520(K43) mixer to produce a 8.83MHz second IF signal. The second IF signal is divided into two signals, one of which is branched to the noise blanker, amplified by amplifier Q28, and then goes to the NB circuit. The other signal is input to the second IF signal amplifier, and serves as a blanking gate by the NB and RBK signals. The amplified second IF signal is passed through the 8.83MHz IF filter, and output to the final unit (C/5 connection section) from CN10. This signal is switched with the diode switch D62 and D68, and functions as a second IF signal output during reception and a third IF signal input during transmission.

The second IF signal input to CN412 in the final unit (C/5 connection section) is routed to the receiver circuit by D450, and input to the mixer Q460 and Q461 to generate a 455kHz third IF signal. It is passed through the 455kHz IF filter, amplified by third IF amplifier Q475, and output by CN411 to the TX-RX unit as RIF signal. The total gain of the receiver unit is adjusted by VR1 in the TX-RX unit.

CIRCUIT DESCRIPTION

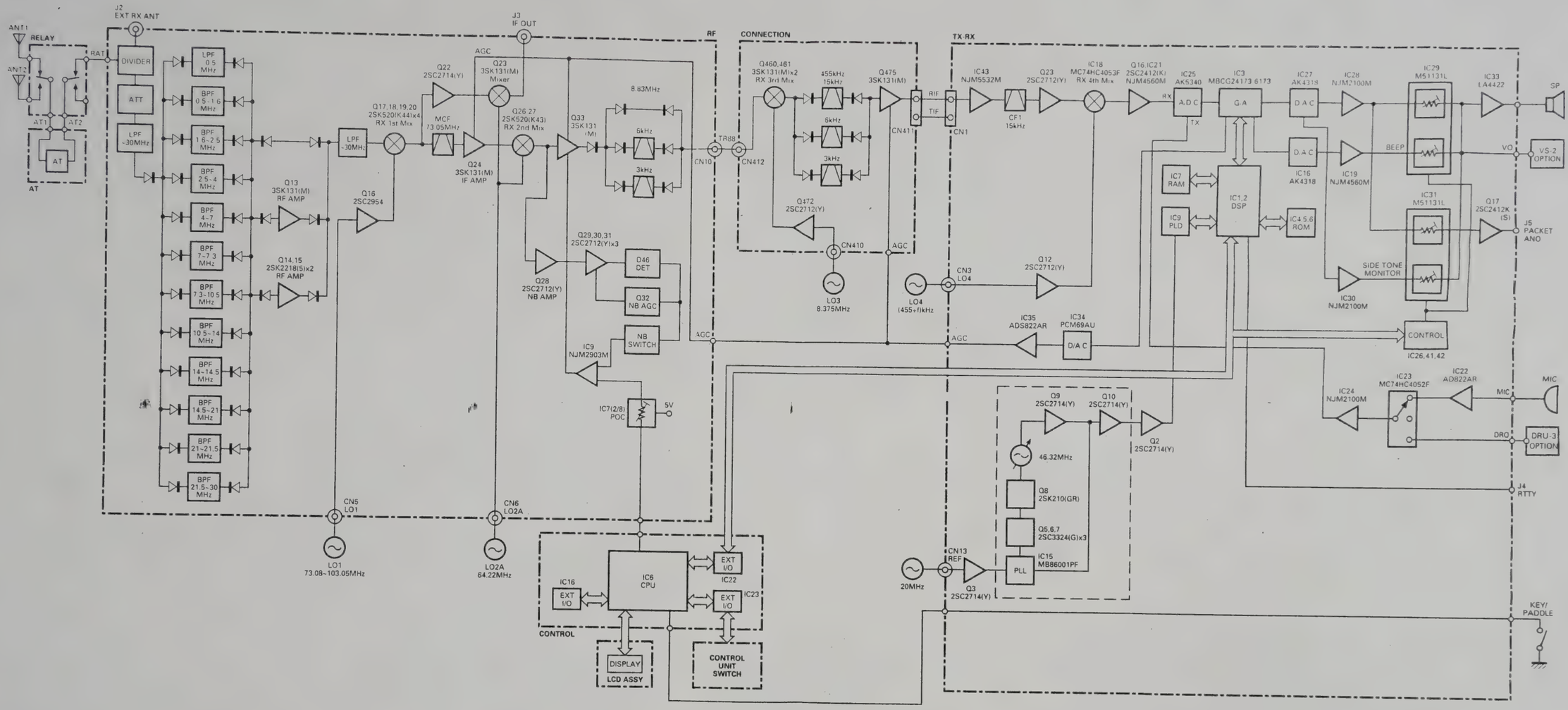

Fig. 3 Receiver block diagram

CIRCUIT DESCRIPTION

■ IF gain correction

The total gain changes when the AIP is turned ON or OFF or the band is 21.49MHz or higher. To limit the changes, the DSP corrects the IF gain. Table 2 lists the corrections. When the "AIP S-meter correction" on menu No.11 is turned ON, the S-meter is corrected when the AIP is turned ON. And since the IF gain is corrected greatly, the receiver internal noise output becomes large.

Frequency	Correction (dB)			Pre-amp gain (dB) reference
	AIP			
	OFF	ON1 (Menu 11 OFF)	ON2 (Menu 11 ON) SSB, CW, FSK only	
30kHz~ 21.49MHz	-2	0	+12	15
21.49MHz~ 30.MHz	-7	0	+12	21

Table 2 IF gain corrections

■ NB circuit

The noise blanker, like the conventional one, branches the signal before the narrow-band filter of the 8.83MHz second IF, and detects noise, and performs blanking using the second IF amplifier as a gate. The signal is amplified by Q28, detected by the AGC amplification and noise detection circuit consisting of Q29 to Q32 and D46, and then a blanking pulse is generated by the IC9 comparator. The noise detection circuit Q29 to Q32 and D46 is separated into segments by a jumper in the unit to prevent sneak path.

■ Slope tune

The operating principle of SSB-SLOPE-TUNE is explained first. When f_{LO1}, f_{LO3}, and f_{LO4} in Figure 4 are at their normal frequencies, the synthesized bandwidth is indicated by A. If the f_{LO1} frequency is increased by $\Delta f1$ and the f_{LO3} frequency is decreased by $\Delta f1$, the filter of the 8.83MHz band shifts to position B. The synthesized bandwidth is indicated by the section overlapped by A and B. When the frequencies of f_{LO1} and f_{LO3} are lowered by $\Delta f2$, only the 455kHz second IF filter shifts to position C. The synthesized bandwidth is indicated by the section overlapped by B and C.

Therefore, high frequencies are cut off by increasing the f_{LO1} frequency and decreasing the f_{LO3} frequency. Low frequencies are cut off by decreasing the f_{LO3} and f_{LO4} frequencies. The TS-870S enables these operations using the DSP filter.

In SSB mode, slope tune high cut/low cut is switched by using the filter select control : in CW mode, the WIDTH (bandwidth)/SHIFT (center frequency) is changed, and in FSK mode, the WIDTH (bandwidth) is changed. The microcomputer in the control unit sends filter select data to the DSP, and slope tuning is carried out by changing frequency data given to the PLL and DDS. The second IF (8.83MHz) and third IF (455kHz) filters are selected to carry out slope tuning effectively. Tables 3 and 4 list filter selections, slope tuning and analog filter high cut/low cut amounts. Slope tuning low cut/high cut can be switched in AM mode, and the WIDTH can be switched in FM mode by using DSP filters only, and the analog filter is fixed to 15kHz.

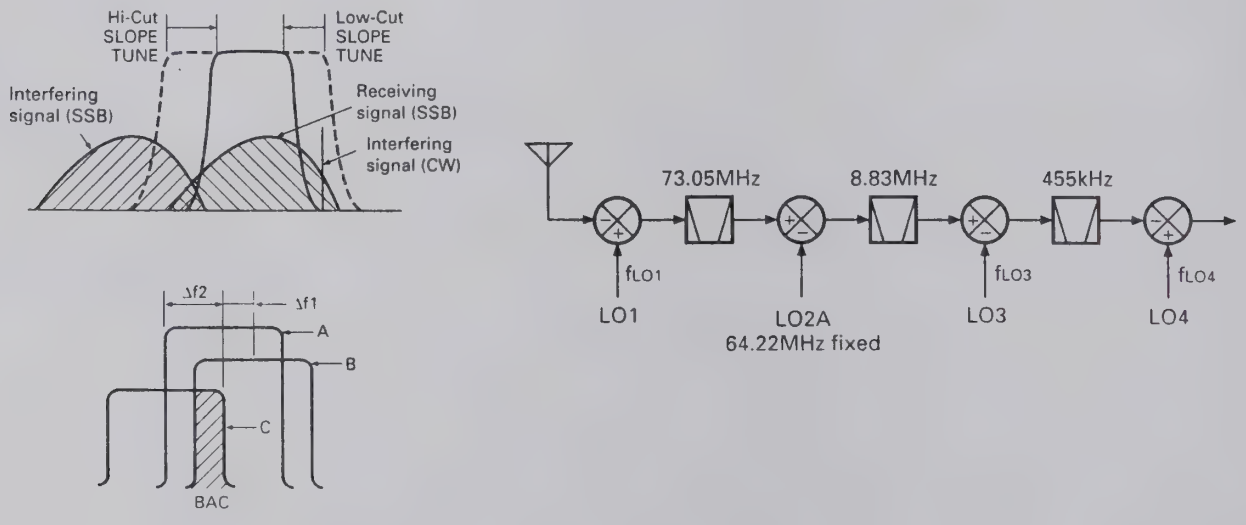

Fig. 4 SSB slope tune operating principle

CIRCUIT DESCRIPTION

	1.4k	1.6k	1.8k	2.0k	2.2k	2.4k	2.6k	2.8k	3.0k	3.4k	4.6k	6.0k
0 (Hz)	1.0k	0.8k	0.6k	0.4k	0.2k	0.0k	1.4k	1.2k	1.0k	0.6k	0.0k	0.0k
50	↑	↑	↑	↑	↑	↑	↑	↑	↑	↑	↑	↑
100	↑	↑	↑	↑	↑	↑	↑	↑	↑	↑	↑	↑
200	↑	↑	↑	↑	↑	↑	–0.2k	↑	↑	↑	↑	↑
300	↑	↑	↑	↑	↑	↑	↑	↑	↑	↑	↑	↑
400	↑	↑	↑	↑	↑	↑	↑	–0.4k	↑	↑	↑	↑
500	↑	↑	↑	↑	↑	↑	↑	↑	↑	↑	↑	↑
600	↑	↑	↑	↑	↑	↑	↑	↑	–0.6k	↑	↑	↑
800	↑	↑	↑	↑	↑	↑	↑	↑	↑	↑	–0.6k	↑
1000	↑	↑	↑	↑	↑	↑	↑	↑	↑	–1.0k	↑	↑

← High cut position

Filter selection
- 3kHz filter
- 6kHz filter
- 15kHz filter
- Default

↑
Low cut posotion
(455kHz filter) Low cut amount

(8.83MHz filter) High cut amount

Table 3 SSB slop tuning and analog filter high/low cut (Hz)

	400	450	500	550	600	650	700	750	800	850	900	950	1000
50 (Hz)	375	425	475	525	575	625	675	725	775	825	875	925	975
100	350	400	450	500	550	600	650	700	750	800	850	900	950
200	300	350	400	450	500	550	600	650	700	750	800	850	900
400	200	250	300	350	400	450	500	550	600	650	700	750	800
600	100	150	200	250	300	350	400	450	500	550	600	650	700
1000	–100	–50	0	50	100	150	200	250	300	350	400	450	500

← Filter center position

Default

↑
Filter width

Table 4-1 CW WIDTH/SHIFT low cut amount (Hz)

	400	450	500	550	600	650	700	750	800	850	900	950	1000
50 (Hz)	1975	1925	1875	1825	1775	1725	1675	1625	1575	1525	1475	1425	1375
100	1950	1900	1850	1800	1750	1700	1650	1600	1550	1500	1450	1400	1350
200	1900	1850	1800	1750	1700	1650	1600	1550	1500	1450	1400	1350	1300
400	1800	1750	1700	1650	1600	1550	1500	1450	1400	1350	1300	1250	1200
600	1700	1650	1600	1550	1500	1450	1400	1350	1300	1250	1200	1150	1100
1000	1500	1450	1400	1350	1300	1250	1200	1150	1100	1050	1000	950	900

← Filter center position

Default

↑
Filter width

Table 4-2 CW WIDTH/SHIFT high cut amount (Hz)

■ IF filter

The IF filter consists of a DSP digital filter. If there is a HIGH signal outside the DSP filter band, the analog to digital converter input level may be saturated, and the filter does not work properly. Thus, an analog filter is inserted between the second IF (8.83MHz) and the third IF (455kHz) so that it does not impair the DSP filter properties. To operate each filter properly, there are three kinds of filters for each IF signal and also slope tuning is carried out.

1) Filters characteristics

Item	Rating
Nominal center frequency	73.05MHz
Pass bandwidth	±7.5kHz or more at 3dB
Attenuation bandwidth	±30kHz or less at 40dB
Ripple	1.0dB or less
Insertion loss	3.0dB or less
Guaranteed attenuation	70dB or more at fo + (500 to 1000kHz) 70dB or more at fo – (200 to 1000kHz)
Center frequency deviation	Within ±1.5kHz at 3dB
Terminating impedance	2kΩ ± 10%

MCF (L71-0401-05) : RF unit XF1

Item	Rating
Nominal center frequency	8830kHz
Center frequency deviation	Within ±150Hz at 6dB
Pass bandwidth	±1.5kHz or more at 6dB
Attenuation bandwidth	±1.9kHz or less at 20dB ±2.75kHz or less at 60dB ±3.5kHz or less at 80dB
Ripple	2dB or less
Insertion loss	6dB or less
Guaranteed attenuation	80dB or more in the range ±3.5kHz to ±1MHz
Terminating impedance	600Ω / 15pF

MCF (L71-0235-05) : RF unit XF2

Item	Rating
Nominal center frequency	8830kHz
Pass bandwidth	±3.0kHz or more at 6dB
Attenuation bandwidth	±16.0kHz or less at 60dB ±13.0kHz or less at 50dB
Guaranteed attenuation	70dB or more with in fo ± 1MHz (Without spurious in the range fo to fo+500kHz)
Ripple	Within 1.0dB
Insertion loss	Within 1.5dB
Terminating impedance	1850kΩ / 2pF

MCF (L71-0266-05) : RF unit XF3

Item	Rating
Nominal center frequency	8.400MHz
3dB attenuation bandwidth	Within 180 ± 40kHz
20dB attenuation bandwidth	400kHz or less
Insertion loss	9.0dB or less Formula : 20 x log [E1÷ (2 x E2)]
Ripple	1.0dB or less (within 3dB band)
Spurious attenuation	25dB or more (6.0 to 10.0MHz)
Voltage capacity	50V DC (1 minute)
Insulating resistance	100MΩ or more (100V DC)
Input and output impedance	330Ω

Ceramic filter (L72-0343-05) : RF unit CF500, 501

Item	Rating
Nominal center frequency	455kHz
6dB bandwidth	±3kHz (455kHz)
50dB bandwidth	±9kHz (455kHz)
Ripple	2dB or less (within 455+2kHz)
Insertion loss	6dB or less
Guaranteed attenuation	60dB or more (within 455±100kHz)
Input and output impedance	2.0kΩ

Ceramic filter (L72-0319-05) : Final unit CF451

Item	Rating
Center frequency	455±0.20kHz
6dB bandwidth	2.9 to 3.2kHz
60dB bandwidth	4.7kHz or less
Guaranteed attenuation	60dB or more at 0.1 to 1MHz
Spurious	40dB or more at 600 to 700kHz
6dB band ripple	2dB or less
Insertion loss	6dB or less
Input and output impedance	2kΩ

Ceramic filter (L72-0333-05) : Final unit CF452

Item	Rating
Nominal center frequency	455kHz
6dB bandwidth	±7.5kHz or more (455kHz)
50dB bandwidth	±15kHz or less (455kHz)
Ripple	3dB or less (within 455+5kHz)
Insertion loss	6dB or less
Guaranteed attenuation	35dB or more (within 455±100kHz)
Input and output impedance	1.5kΩ

Ceramic filter (L72-0366-05) : Final unit CF453

■ IF gain correction

The total gain changes when the AIP is turned ON or OFF or the band is 21.49MHz or higher. To limit the changes, the DSP corrects the IF gain. Table 2 lists the corrections. When the "AIP S-meter correction" on menu No.11 is turned ON, the S-meter is corrected when the AIP is turned ON. And since the IF gain is corrected greatly, the receiver internal noise output becomes large.

Frequency	Correction (dB)			Pre-amp gain (dB) reference
	AIP			
	OFF	ON1 (Menu 11 OFF)	ON2 (Menu 11 ON) SSB, CW, FSK only	
30kHz~ 21.49MHz	–2	0	+12	15
21.49MHz~ 30.MHz	–7	0	+12	21

Table 2 IF gain corrections

■ NB circuit

The noise blanker, like the conventional one, branches the signal before the narrow-band filter of the 8.83MHz second IF, and detects noise, and performs blanking using the second IF amplifier as a gate. The signal is amplified by Q28, detected by the AGC amplification and noise detection circuit consisting of Q29 to Q32 and D46, and then a blanking pulse is generated by the IC9 comparator. The noise detection circuit Q29 to Q32 and D46 is separated into segments by a jumper in the unit to prevent sneak path.

■ Slope tune

The operating principle of SSB-SLOPE-TUNE is explained first. When f_{LO1}, f_{LO3}, and f_{LO4} in Figure 4 are at their normal frequencies, the synthesized bandwidth is indicated by A. If the f_{LO1} frequency is increased by $\Delta f1$ and the f_{LO3} frequency is decreased by $\Delta f1$, the filter of the 8.83MHz band shifts to position B. The synthesized bandwidth is indicated by the section overlapped by A and B. When the frequencies of f_{LO1} and f_{LO3} are lowered by $\Delta f2$, only the 455kHz second IF filter shifts to position C. The synthesized bandwidth is indicated by the section overlapped by B and C.

Therefore, high frequencies are cut off by increasing the f_{LO1} frequency and decreasing the f_{LO3} frequency. Low frequencies are cut off by decreasing the f_{LO3} and f_{LO4} frequencies. The TS-870S enables these operations using the DSP filter.

In SSB mode, slope tune high cut/low cut is switched by using the filter select control : in CW mode, the WIDTH (bandwidth)/SHIFT (center frequency) is changed, and in FSK mode, the WIDTH (bandwidth) is changed. The microcomputer in the control unit sends filter select data to the DSP, and slope tuning is carried out by changing frequency data given to the PLL and DDS. The second IF (8.83MHz) and third IF (455kHz) filters are selected to carry out slope tuning effectively. Tables 3 and 4 list filter selections, slope tuning and analog filter high cut/low cut amounts. Slope tuning low cut/high cut can be switched in AM mode, and the WIDTH can be switched in FM mode by using DSP filters only, and the analog filter is fixed to 15kHz.

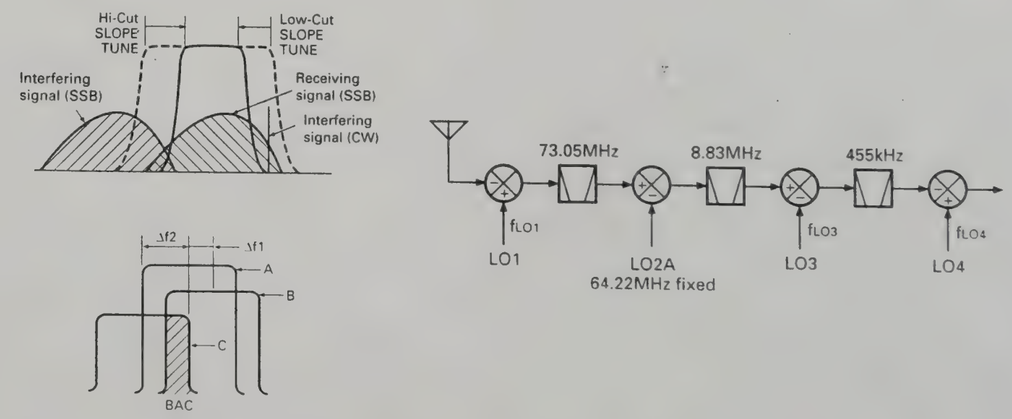

Fig. 4 SSB slope tune operating principle

CIRCUIT DESCRIPTION

	1.4k	1.6k	1.8k	2.0k	2.2k	2.4k	2.6k	2.8k	3.0k	3.4k	4.6k	6.0k
0 (Hz)	1.0k	0.8k	0.6k	0.4k	0.2k	0.0k	1.4k	1.2k	1.0k	0.6k	0.0k	0.0k
50	↑	↑	↑	↑	↑	↑	↑	↑	↑	↑	↑	↑
100	↑	↑	↑	↑	↑	↑	↑	↑	↑	↑	↑	↑
200	↑	↑	↑	↑	↑	↑	–0.2k	↑	↑	↑	↑	↑
300	↑	↑	↑	↑	↑	↑	↑	↑	↑	↑	↑	↑
400	↑	↑	↑	↑	↑	↑	↑	–0.4k	↑	↑	↑	↑
500	↑	↑	↑	↑	↑	↑	↑	↑	↑	↑	↑	↑
600	↑	↑	↑	↑	↑	↑	↑	↑	–0.6k	↑	↑	↑
800	↑	↑	↑	↑	↑	↑	↑	↑	↑	↑	–0.6k	↑
1000	↑	↑	↑	↑	↑	↑	↑	↑	↑	–1.0k	↑	↑

← High cut position

Filter selection
- 3kHz filter
- 6kHz filter
- 15kHz filter
- Default

↑
Low cut posotion
(455kHz filter) Low cut amount

(8.83MHz filter) High cut amount

Table 3 SSB slop tuning and analog filter high/low cut (Hz)

	400	450	500	550	600	650	700	750	800	850	900	950	1000
50 (Hz)	375	425	475	525	575	625	675	725	775	825	875	925	975
100	350	400	450	500	550	600	650	700	750	800	850	900	950
200	300	350	400	450	500	550	600	650	700	750	800	850	900
400	200	250	300	350	400	450	500	550	600	650	700	750	800
600	100	150	200	250	300	350	400	450	500	550	600	650	700
1000	–100	–50	0	50	100	150	200	250	300	350	400	450	500

← Filter center position

Default

↑
Filter width

Table 4-1 CW WIDTH/SHIFT low cut amount (Hz)

	400	450	500	550	600	650	700	750	800	850	900	950	1000
50 (Hz)	1975	1925	1875	1825	1775	1725	1675	1625	1575	1525	1475	1425	1375
100	1950	1900	1850	1800	1750	1700	1650	1600	1550	1500	1450	1400	1350
200	1900	1850	1800	1750	1700	1650	1600	1550	1500	1450	1400	1350	1300
400	1800	1750	1700	1650	1600	1550	1500	1450	1400	1350	1300	1250	1200
600	1700	1650	1600	1550	1500	1450	1400	1350	1300	1250	1200	1150	1100
1000	1500	1450	1400	1350	1300	1250	1200	1150	1100	1050	1000	950	900

← Filter center position

Default

↑
Filter width

Table 4-2 CW WIDTH/SHIFT high cut amount (Hz)

CIRCUIT DESCRIPTION

■ Local signals (LO1, LO3, LO4)

1) LO1

Table 5 lists LO1 frequency configuration.

DDS1 varies from 0.46 to 1.46MHz, and when the display frequency is multiple MHz (for example, 14.000MHz), 0.96MHz is output. When the display frequency is increased, the DDS1 frequency is reduced by the amount of change. When the DDS1 frequency is reduced to 0.46MHz, the frequency is switched to 1.46MHz, and when it is increased to 1MHz, the frequency returns to 0.96MHz (Figure 5). By changing the 1MHz band in synchronization with the display frequency, the 1MHz comparison PLL circuit is locked and LO1 is generated.

In Table 5, the 0.96MHz base indicates the DDS output when the frequency is multiple MHz. The frequency (UNV) indicates the decimal digits of the MHz frequency. (If the display frequency is 14.2MHz, (UNV) = 0.2MHz.) DDS is switched by 500kHz, so – 0.5MHz ≤ (UNV) < 0.5MHz.

As described in the slope tuning section, slope tuning high-cutting is corrected for LO1, so the correction is added to the DDS output. SSB H in Table 5 indicates the correction. Table 3 shows the actual correction of SSB H. (For example, when the high frequency is 2.2kHz, the correction SSB H is 0.2kHz.)

Since RIT and XIT change the receive and transmit frequencies by the preset amount, it needs to be corrected. They are D RIT and D XIT in Table 5.

The "8.83MHz window-joining" (D 883) in Table 5 is determined during adjustment. For example, the equation for calculating the DDS output frequency for 14.2MHz USB. The high-cut frequency is assumed to be 2.6kHz. (D 833 is zero.)

DDS1 : 0.96M – (UNV) – (OFS SSB) + (SSB H)
= 0.96M – 0.2M – 1.2k – 0.2k
= 758.6kHz
0.96M : Base
UNV : 14.2M – 14.0M = 0.2M
OFS SSB (Filter offset) : 1.2k
SSB H (Slope HI) : –0.2k (See table 3.)

The LO1 output frequency f_{LO1} is calculated from the frequency configuration in Figure 6.

$f_{LO1} = f_{PLL\ IN} + 60MHz - (4MHz + f_{DDS1})$
$= 32MHz + 60MHz - (4MHz + 758.6kHz)$
$= 87.2414MHz$

Where $f_{PLL\ IN}$ is the PLL input frequency and f_{DDS1} is the DDS1 output frequency.

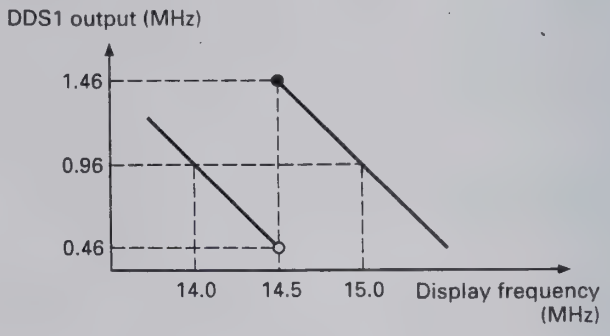

Fig. 5 Relationship between display frequency and DDS output frequency

2) LO3

Table 6 lists the LO3 frequency configuration.

The LO3 frequency is 8.375MHz, and is generated by the chopper circuit. The DDS2 output frequency is 1.625MHz. For LO3, slope tuning low-cut/high-cut is corrected. SSB H and SSB L in Table 6 indicate the corrections. D 833 and D 455 are values determined during filter window-joining and adjustment.

For example, if USB is 14.2MHz, high-cut frequency is 2.6kHz, and low-cut frequency is 300Hz, the LO3 frequency is calculated as follows. It is assumed that D 833 and D 455 are zero.

$f_{LO3} = 1.625MHz + (SSB\ H) + (SSB\ L)$
$= 1.625MHz + (-0.2kHz) + 300Hz$
$= 1625.1kHz$

CIRCUIT DESCRIPTION

3) LO4

Table 7 lists the LO4 frequency configuration.

For LO4, correction (OFS SSB) is carried out so that a signal passes through a filter according to the mode, and the slope tune low-cut (SSB L) is corrected. The mode offset is the frequency (11.30859375kHz) used for processing by the DSP, and its sign changes with the mode.

For example, if USB is 14.2MHz and the low-cut frequency is 300Hz, the LO4 output frequency is calculated as follows.

f_{LO4} = 455kHz + (mode offset) + (OFS SSB) + (SSB L)
= 455kHz + 11.30859375kHz + 300Hz
= 467.8085938kHz

The filter is corrected according to each mode by LO1 and LO4, slope tuning high-cut is corrected by LO1 and LO3, and low-cut is corrected by LO3 and LO4.

In other modes, each local frequency is determined by the calculation method as shown previously in Tables 5 to 7.

Component	DDS1 (1HZ)															
	LSB		USB		CW		CW-R		FSK		FSK-R		AM		FM	
	RX	TX	RX	TX	RX	TX	RX	TX	RX	TX	RX	TX	RX	TX	RX	TX
BASE	0.96MHz*6															
Frequency (100kHz or less)	– (UNV)															
Mode offset																
Filter offset*1	+ (OFS SSB)	+2k	– (OFS SSB)	–2k	–800		+800									
CW pitch					+ (PITCH)		– (PITCH)									
FSK tone (H/L)																
FSK shift (polarity)																
RIT	– (D RIT)		– (D RIT)		– (D RIT)		– (D RIT)		– (D RIT)		– (D RIT)		– (D RIT)		– (D RIT)	
XIT		– (D RIT)		– (D RIT)		– (D RIT)		– (D RIT)		– (D RIT)		– (D RIT)		– (D RIT)		– (D RIT)
Slope high*2, 3	– (SSB H)		+ (SSB H)		+ (CW H)		– (CW H)		– (FSK H)		+ (FSK H)					
Slope low																
8.83MHz window-joining*4, 5	– (D 883)			+ (D 883)												
455kHz window-joining																

*1 : Although receiver data has an independent value for each mode, the data area for calculation is D OFFSET.
Transmitter data is fixed because the 8.83MHz filter bandwidth is fixed.

*2 : Although it has an independent value for each mode, the data area for calculation is D SLOP L.

*3 : The slope low-cut is carried out at 455kHz and high-cut is carried out at 8.83MHz.

*4 : The LSB and USB may have the same value because the filter bandwidth is wide.

*5 : The positive direction for adjustment is the direction in which the receive carrier frequency increases.

*6 : The DDS1 variable frequency is 1.45MHz and is shifted by 500kHz.

Table 5 LO1 frequency configuration

CIRCUIT DESCRIPTION

Component	DDS2 (LO3)															
	LSB		USB		CW		CW-R		FSK		FSK-R		AM		FM	
	RX	TX	RX	TX	RX	TX	RX	TX	RX	TX	RX	TX	RX	TX	RX	TX
BASE	1.625MHz*6															
Mode offset																
Filter offset																
CW pitch																
FSK tone (H/L)																
FSK shift (polarity)																
RIT/XIT																
Slope high*1, 3	– (SSB H)		+ (SSB H)		+ (CW H)		– (CW H)		– (FSK H)		+ (FSK H)					
Slope low*2, 3	– (SSB L)		+ (SSB L)		+ (CW L)		– (CW L)		– (FSK L)		+ (FSK L)					
8.83MHz window-joining*4, 5	– (D 883)			+ (D 883)												
455kHz window-joining*4, 5	+ (D 455)			– (D 455)												

*1 : Although it has an independent value for each mode.

*2 : Although it has an independent value for each mode.

*3 : The slope low-cut is carried out at 455kHz and high-cut is carried out at 8.83MHz.

*4 : The LSB and USB may have the same value because the filter bandwidth is wide.

*5 : The positive direction for adjustment is the direction in which the receive carrier frequency increases.

*6 : Since the DDS2 output frequency is high, 1.625MHz (10MHz – output frequency (8.375MHz)) is output to the DDS.

Table 6 LO3 frequency configuration

Component	DDS3 (LO4)															
	LSB		USB		CW		CW-R		FSK		FSK-R		AM		FM	
	RX	TX	RX	TX	RX	TX	RX	TX	RX	TX	RX	TX	RX	TX	RX	TX
BASE	455kHz															
Mode offset (kHz)	–11.30859375		+11.30859375		+11.30859375		–11.30859375		–11.30859375		+11.30859375		+11.30859375		+11.30859375	
Filter offset*1	– (OFS SSB)	–2k	+ (OFS SSB)	+2k	+800		–800									
CW pitch																
FSK tone (H/L)									–2125 /–1275		+2125 /+1275					
FSK shift (polarity)											+ (FSK S)	+ (FSK S)				
RIT/XIT																
Slope high																
Slope low*2, 3	– (SSB L)		+ (SSB L)		+ (CW L)		– (CW L)		– (FSK L)		+ (FSK L)					
8.83MHz window-joining																
455kHz window-joining*4, 5	– (D 455)			+ (D 455)												

*1 : Although receiver data has an independent value for each mode.
Transmitter data is fixed because the 8.83MHz filter bandwidth is fixed.

*2 : Although it has an independent value for each mode.

*3 : The slope low-cut is carried out at 455kHz and high-cut is carried out at 8.83MHz.

*4 : The LSB and USB may have the same value because the filter bandwidth is wide.

*5 The positive direction for adjustment is the direction in which the receive carrier frequency increases.

Table 7 LO4 frequency configuration

CIRCUIT DESCRIPTION

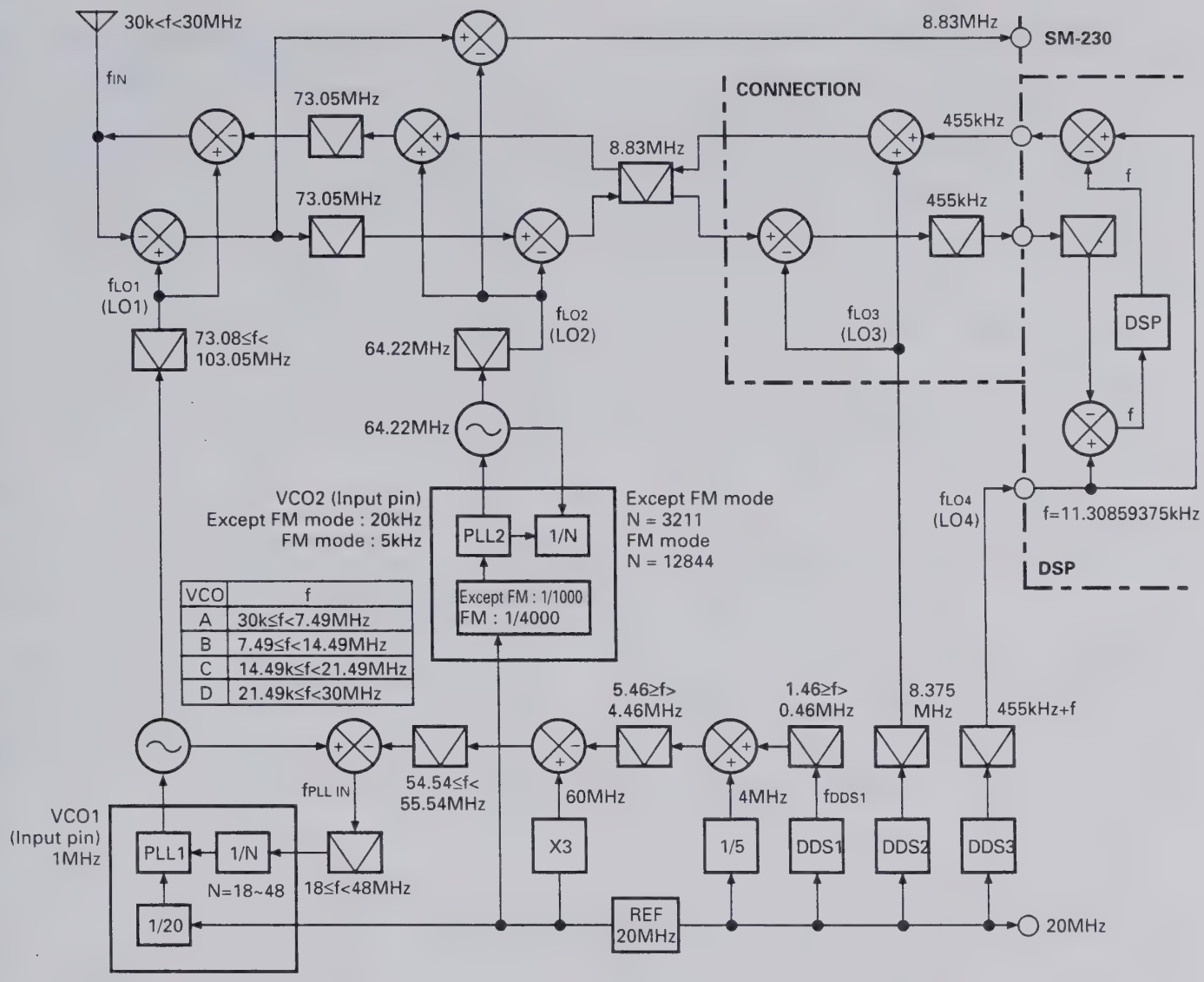

Fig. 6 Frequency configuration

CIRCUIT DESCRIPTION

Transmitter Circuit

The transmitter system block diagram is shown in Figure 7.

The TS-870S has the same frequency configuration as the TS-850 after the DSP generates the IF signal and converts it to 455kHz as a basic configuration.

A difference from the conventional model other than DSP modulation is that the TS-870S uses a digital-to-analog converter and a microcomputer for various controls. This allows for fine control and reduces the number of controls needed for adjustment.

The TIF (second IF) signal output from the TX-RX unit goes to the final unit (C/5 connection section). The signal is converted from 455kHz to 8.83MHz. The 8.83MHz third IF signal converted by the Q470 and Q471: 3SK131(M) mixer is switched to the transmitter by the D450 diode switch, and output from CN412 to the RF unit (A/9 RF section) as TR88 signal.

The signal input to CN10 of the RF unit is passed through the 8.83MHz IF filter used for both transmission and reception. During transmission, XF3 BW: 5kHz is selected by D69 and D67 and the filter attenuates the components outside the band. The transmit signal switched by D68 is amplified and ALC-controlled by the Q39 ALC amplifier, and the resulting signal goes to the D49 TX gain control circuit. This circuit controls the gain at the transmission stage according to the given voltage via a variable attenuator of a pin diode. The control voltage is controlled by a microprocessor, and is used to set the gain for each band or set the gain with the PWR knob and mode.

The third IF signal is then converted to the 73.05MHz fourth IF signal by the Q37 and Q38 : 3SK131(M) mixer. The signal is passed through the LC filter, and is converted to the target frequency by the final local oscillator LO1 at the Q35 and Q36 : 3SK184(R) mixer. The signal is passed through the radiation filter and the band-pass filter used by both the transmitter and receiver sections to attenuate the spurious outside the band. The band-pass filter output is amplified by Q5 : 2SC2954, and output to the final unit (A/5 final section) from CN4 as the drive signal.

■ TX-AGC

The DSP controls the input level until it starts modulation. It is like AGC applied to the microphone amplifier, and when the input level exceeds the certain level, the amplifier gain decreases to keep the modulator input level constant, i.e., to keep the IF output constant.

The MIC gain control in SSB and AM modes is used to adjust the maximum gain of the AGC amplifier in the 40dB range. Even if the control is set maximum, the input level to the modulator is kept constant. If the PROC is OFF in SSB mode, the CAR level (TIF output level) is fixed, and the ALC effect is limited. If the PROC is ON in SSB mode, the ALC effect is adjusted by the CAR control. The microphone amplifier gain is fixed, but the speech processor input level is controlled by the AGC and then becomes the level set by the PROC control.

In FM mode, the microphone amplifier sensitivity can be changed to high or low by using Menu No.61. Since the frequency deviation is limited by the TX-AGC, it is not distorted extremely like in the clipper method. In AM mode, the sensitivity is controlled so that modulation does not exceed 70%.

The TX-AGC is required to stabilize the DSP modulator operation. The modulator may operate without using the AGC by reduction of the gain and input level, but it cannot be completely turned OFF. Care must therefore be taken when measuring the ALC properties and frequency characteristics.

CIRCUIT DESCRIPTION

AT Unit (Auto Antenna Tuner)

When the AUTO/THROUGH switch is set to AUTO, ATA goes LOW, the AUTO/THROUGH switching relay K1 is executed, and AT is inserted to prepare for tuning. If "RX AT ON" is set in menu No.8, AT is inserted during reception. If the position of variable capacitor VC1 or VC2 is not the preset position of the band, presetting is performed. The AT tune and transmission do not occur until presetting ends.

When AT TUNE is turned on with this condition, ATS goes HIGH, the CW mode is set, and the transmission output becomes about 10W. If the SWR is lower than 1.2, the tuning is completed and auto antenna tuning ends. If the SWR is greater than 1.2, the motor control pulse duty (described later) is controlled according to the SWR.

The SWR can be set to 1.6 after AT tuning by turning menu No. 33 "TUNE WIDE" ON.

The motor speed is determined by a microcomputer. Its direction is controlled by phase comparator IC1 and amplitude comparator IC6 if the APRE is LOW, and controlled by the microcomputer if the APRE is HIGH.

■ Auto tuning mode

The transmission power from the final section via the filter section is passed through the current/voltage detection transformer L1 and L2, which use a troidal core. The current and voltage components detected here are rectified by the waveform rectification circuit consisting of D4, D7, Q1, and Q2, and then the phase is compared by IC1. The output signals ($\overline{Q}$ and Q) from pins 8 and 9 of IC1 are passed through the switch by IC2 and are applied to motor drive IC IC4. Variable capacitor VC1 is rotated by the motor M1 so that the phase difference of the voltage and current components decreases.

The voltage and current components detected by L1 and L2 are rectified by diodes D1 and D2 and are applied to the comparator of voltage comparison circuit IC6 as the amplitude component. The comparator output is passed through switch IC3. Motor M2 is driven by another motor drive IC IC5 and variable capacitor VC2 is rotated in the direction that decreases the amplitude difference of the voltage and current components.

Variable capacitor VC1 for capacity adjustment is therefore controlled so that the current and voltage phases match. Variable capacitor VC2 for resistance adjustment is controlled so that the current and voltage amplitude difference decreases. SWR becomes 1 when the phases match and the amplitude difference is zero.

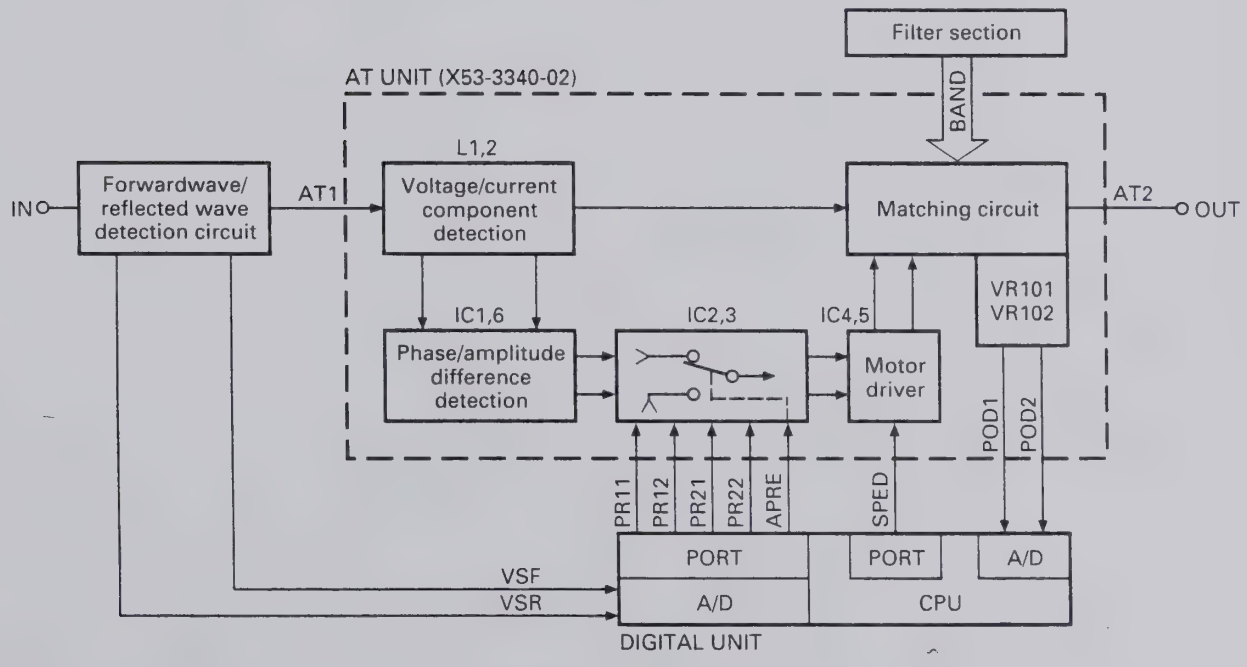

Fig. 9 AT unit block diagram

CIRCUIT DESCRIPTION

The speeds of motors M1 and M2 are determined by the duty cycle of the pulse input to control input pin 8 of IC4 and IC5, and controlled by the standing wave ratio (SWR) calculated by the control unit CPU.

Pulse signal SPED output from the control unit is passed through Q5 : DTC114EK, amplified by Q4, and input to IC4 and IC5 as a control pulse.

If the SWR is 2 or more, the duty cycle of the motor drive voltage pulse is 100%. If the SWR is 1.5 to 2, the duty cycle becomes approx. 80%. If the SWR is less than 1.5, the duty ratio becomes approx. 50% and the motor runs at low speed.

The matching circuit is T type, and the tap position from 1.8 to 30MHz is switched by seven relays K101 to K103 and K105 to K108.

Position detection volumes VR101 and VR102 are linked to the rotation axes of variable capacitors VC1 and VC2 with a gear ratio of 1 : 1. The voltages of 0 to 5V (POD1 and POD2) are generated according to the capacities of the variable capacitors. This position voltage data is sent to the microprocessor in the control unit through the analog to digital converter, and is used as the reference voltage in the feedback control system, such as for preset tuning. The same signal is also used for presetting data and end-detection.

The volume used by the TS-870S is a normal one, not an endless one. Since the rotation angle of this volume is limited, the rotation range is from the minimum capacity to the maximum capacity plus allowance.

By this control, like the preset tuning, which will be described later, POD1 and POD2 are monitored by the microprocessor. If the lower limit voltage of 0.6V or the upper limit voltage of 4.2V is reached, the microprocessor detects that the voltage is close to a limit. To return the voltage to the opposite side, APRE is made HIGH. If the variable capacitor is VC1, and the voltage is close to the lower limit in respect to POD1, the voltage near the upper limit is output. If the voltage is close to the upper limit in respect to POD1, the voltage near the lower limit is output.

The other variable capacitor VC2 outputs the voltage read by POD2 as it is. If the variable capacitor voltage exceeds the specified limit, it returns to the other limit. The other variable capacitor remains in the same position.

If the APRE is HIGH, the motor rotation direction is determined by the CPU unless auto tuning is performed.

The logic for PR11 to PR22 is the same as for IC4 and IC5 : BA6109U2. The signal output from the digital unit passes through IC2 and IC3 : TC4066BP and enters IC4 and IC5.

		PR11	PR12	PR21	PR22
Motor 1	Normal rotation	H	L	–	–
	Reverse rotation	L	H	–	–
Motor 2	Normal rotation	–	–	H	L
	Reverse rotation	–	–	L	H

■ Preset tuning

When tuning ends, the position of the variable capacitor is stored in memory by the microprocessor as preset data for that band.

When the band is changed after tuning is performed in another band, APRE goes HIGH, the motor is controlled by the microprocessor, and preset tuning is performed. During preset tuning, auto tuning or signal transmission is inhibited even if the AT TUNE switch is pressed or transmission becomes ready.

The initial preset-data when the microprocessor is reset includes standard data for a 50-ohm load on each band.

■ Preset memory band

30kHz ≤ f
1.850MHz ≤ f
2.010MHz ≤ f
3.525MHz ≤ f
3.575MHz ≤ f
3.725MHz ≤ f
4.490MHz ≤ f
7.030MHz ≤ f
7.100MHz ≤ f
7.490MHz ≤ f
10.490MHz ≤ f
14.100MHz ≤ f
14.490MHz ≤ f
20.990MHz ≤ f
21.150MHz ≤ f
21.990MHz ≤ f
25.490MHz ≤ f
29.000MHz ≤ f

CIRCUIT DESCRIPTION

Standby Control and Timing

Standby control and timing are carried out by using software for the main CPU in the control unit (X53-356X-XX). The control signals for the control unit are listed below. (See Figure 10 for each timing chart.)

SS : Standby switch input signal. Active LOW.
KEY : Keying input signal from the keyer. Active LOW.
TXC : Transmission output signal. Active HIGH. Same timing as TXB.
RXC : Reception output signal. Active HIGH. Same timing as RXB.
CKY : Output signal. Active HIGH.

With the SS line

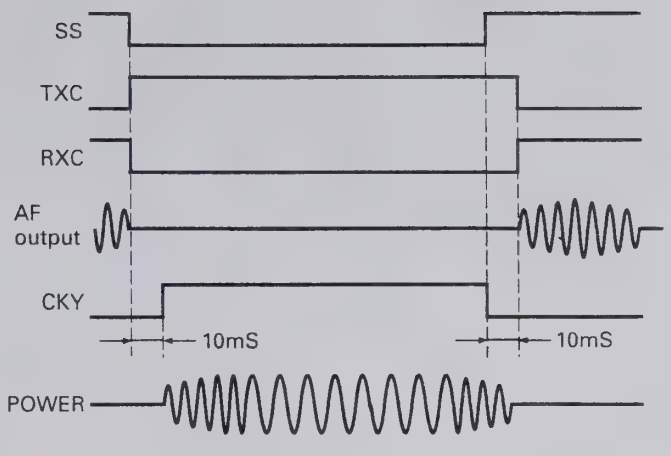

By full break-in

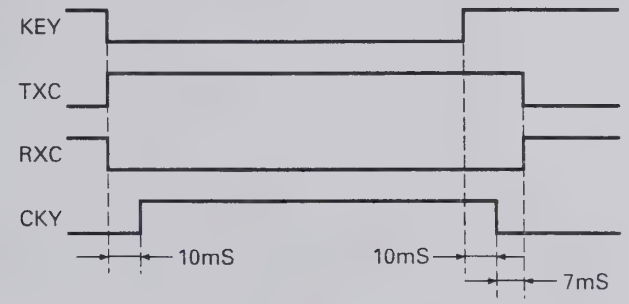

by semi break-in

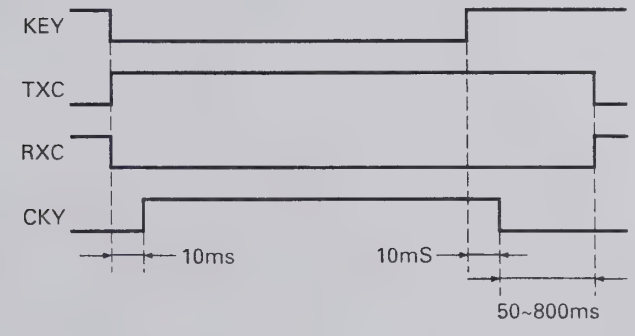

Fig. 10 Transmit/receive signal timing chart

CIRCUIT DESCRIPTION

Digital Control Unit

The TS-870S digital control circuit has a multiple chip configuration centered around the main CPU (IC6 : M37702S4BFP), and consists of a 64K ROM (IC12 : 27C512RJLVC), an 8K RAM (IC8 : LC3564QME-10), and an extended I/O (IC16, IC22, IC23 : CXD1095Q). This circuit controls about 60 different input and about 80 different output signals.

Figure 11 is a digital control block diagram.

■ Address control

The main CPU operates in the microprocessor mode in which the external ROM is used. The memory is configured as shown in the memory map, and the main CPU A12 to A15 and D0 signals and IC14, IC17, IC18, and IC19 are used to generate a chip select (CS) signal to select and access an IC. (Figure 12)

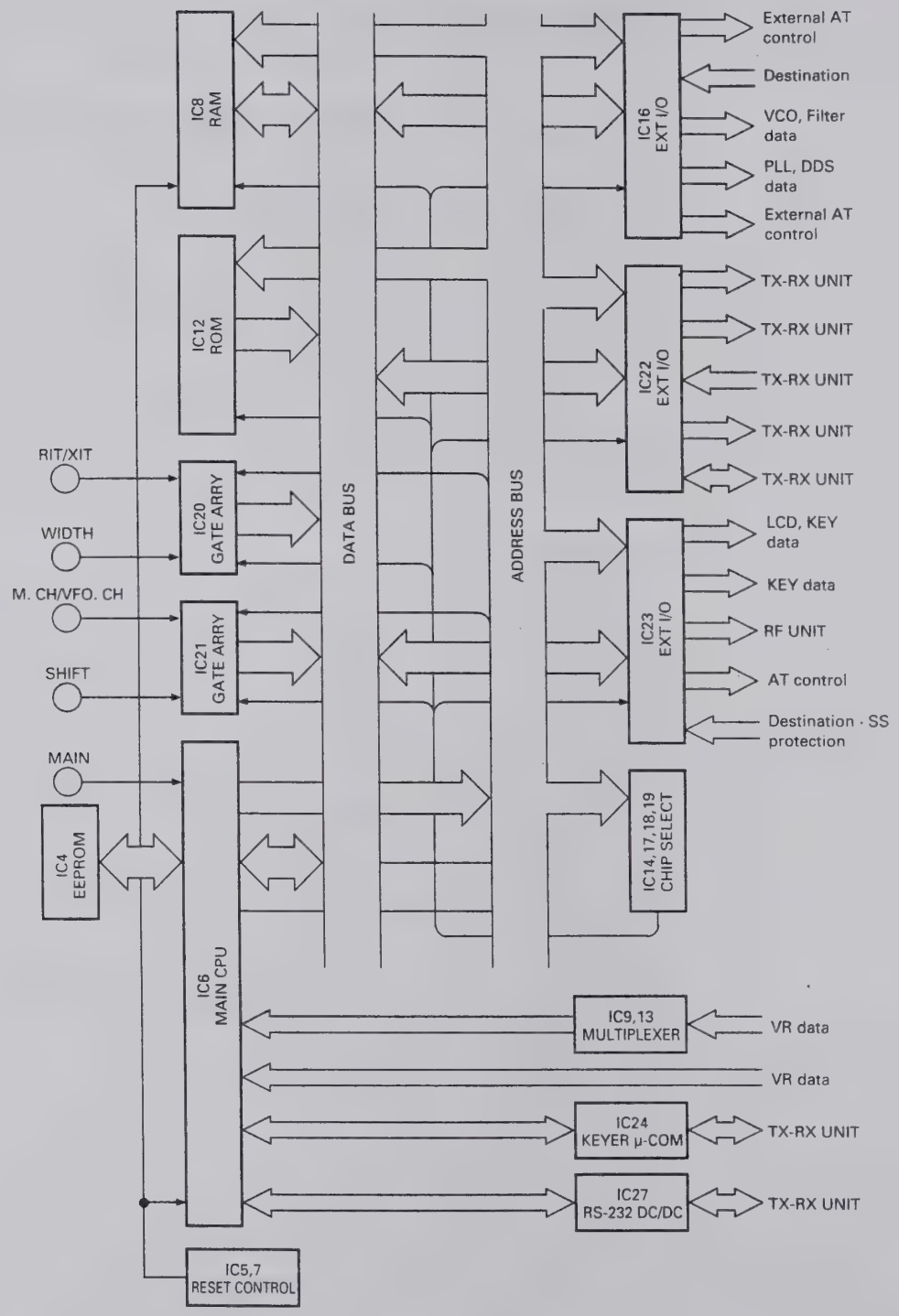

Fig. 11 Digital control block diagram

CIRCUIT DESCRIPTION

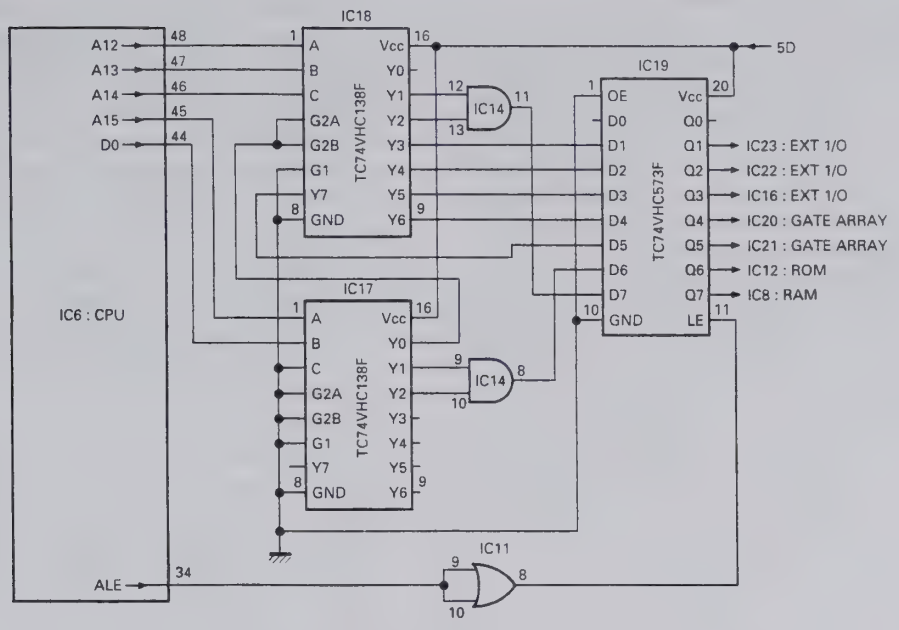

Fig. 12 Address control circuit

■ Encoder circuit

The main encoders are magnetic rotary encoders, and the click, RIT, SHIFT, and WIDTH encoders are contact-type rotary encoders.

The main encoder pulses are read directly by the main CPU.

The other encoder pulses enter the gate array (IC20 and IC21 : LZ92K371), and are read through the main CPU data bus. The gate array is selected by the latch (IC19 : TC74VHC573F) Q4 and Q5. The CK1, CK2 or CK3, CK4 encoder is selected by A0 of the gate array. Encoder data is output to D0 to D7 by making the read signal (RD) LOW when the chip select (CS) signal is LOW. IC25 and IC26 absorb encoder pulse chattering. (Figure 13)

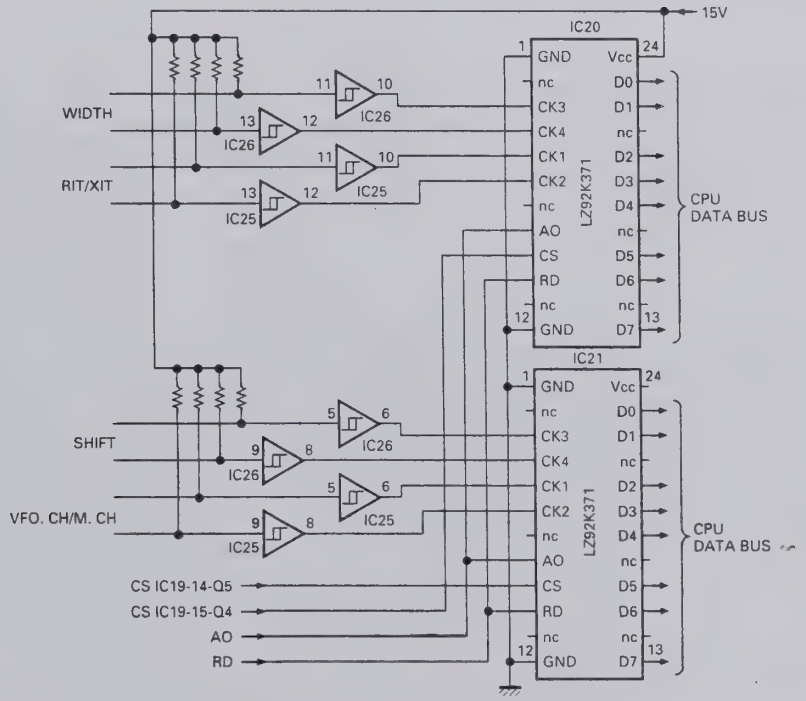

Fig. 13 Encoder circuit

CIRCUIT DESCRIPTION

■ System reset and RAM backup

The power monitor circuit (Q1, Q2, D4, D5, R6) monitors the power supply voltage. If the voltage is LOW, the circuit outputs a LOW signal to the INT1 port of the main CPU and the IRQ2 port of the microprocessor in order for the electronic keyer to stop operation. At the same time, the battery backup IC (IC5 : MB3780A) backs up the RAM with a lithium battery.

If the power supply voltage becomes normal, a HIGH signal is input to the INT1 port and the IRQ2 port, and the main CPU is initialized by the battery backup IC after the time constant set by C56 and C57. The operation resumes and power is supplied to the RAM from the outlet. (Figure 14)

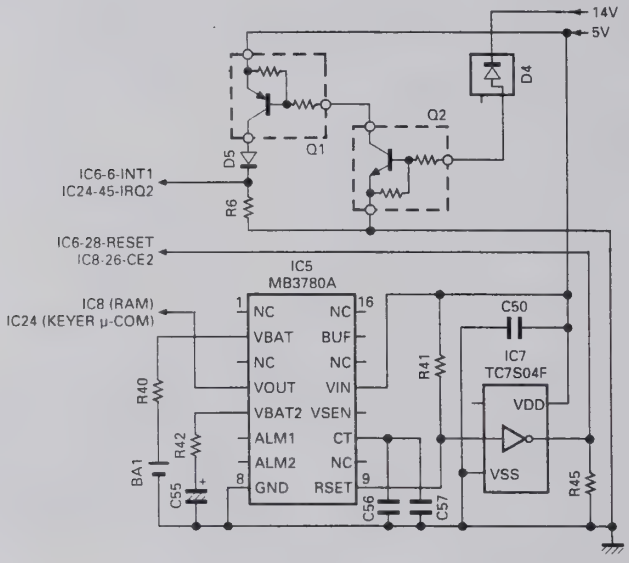

Fig. 14 System reset and RAM backup

■ Analog Signal Input

The main CPU incorporates an 8-channel analog-to-digital (A/D) converter, and in addition, has a multiplexer (IC9 and IC13 : TC4052BF) for entering 16-channel analog signals. Incoming analog signals are converted by the main CPU to digital values, which are used as digital data.

■ Display

Since the TS-870S uses a negative LCD and a fluorescent display tube.

The LCD is lighted with half a duty by the LCD driver, and the fluorescent display tube is lighted by an inverter.

The LCD driver data is set by the clock signal (UCK1), data signal (UDA1), and enable signals (ENL2, ENL3). The blanking signal (BLANK) turns the LCD driver OFF, and the dimmer signal (DIM) changes the inverter duty for dimmer.

■ Key scan

The PB0 and PB7 of IC23 and O2 to O8 of IC501 form a keyboard matrix. A key scan signal (a negative pulse) is output from the O2 to O8. One column corresponding to the PB0 and PB7 is selected, and the state of that switch is read. When the switch at the intersection of the matrix is pressed, the PBx port bit goes LOW. Thus, which switch is pressed can be detected. The key chattering is eliminated by software. (Figure 15)

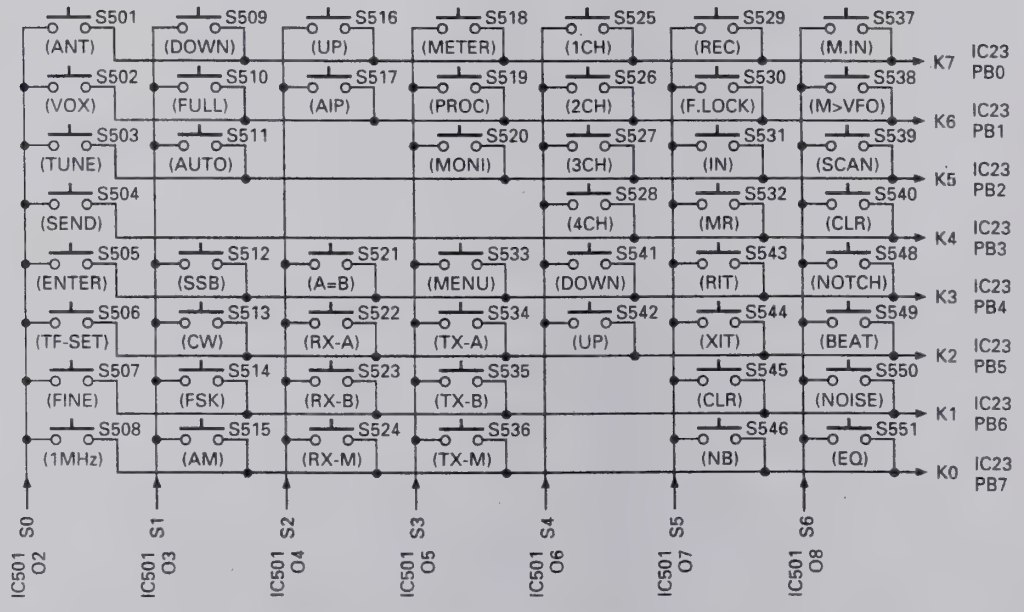

Fig. 15 Key scan circuit

CIRCUIT DESCRIPTION

■ PLL and DDS data

The TS-870S has three PLLs and three DDSs in the PLL section in the RF unit. The main CPU sends data to the PLL ICs and DDS ICs according to the displayed frequency. The PLL ICs provide unlock (UNL) signals. If one of the PLLs should unlock, the display indicates that the PLL is unlocked (Err-FE).

The TX-RX unit also has a PLL IC, to which the main CPU sends 46.32MHz data. The PLL IC also outputs an unlock signal (PLUL), and if a PLL is unlocked, an unlock message (Err-FD) is displayed.

■ AT control

The AT control inputs the variable capacitor position data (POD1, POD2, analog data input), forward wave voltage and reflected wave voltage (VSF, VSR, analog data input) for SWR calculation in the main CPU, and outputs the motor normal/reverse rotation control (PR11, PR12, PR21, PR22), motor speed control signal (SPED), and motor control switching signal (APRE).

SPED switches the motor rotation ON and OFF during AT tune and presetting by PWM with the duty cycle related to the SWR value.

APRE changes the motor normal/reverse rotation control to analog control for AT tune, and to digital control for presetting.

PR11 to PR22 control the motor normal/reverse rotations and stop when the motor normal/reverse control signal is controlled digitally. (Figure 16)

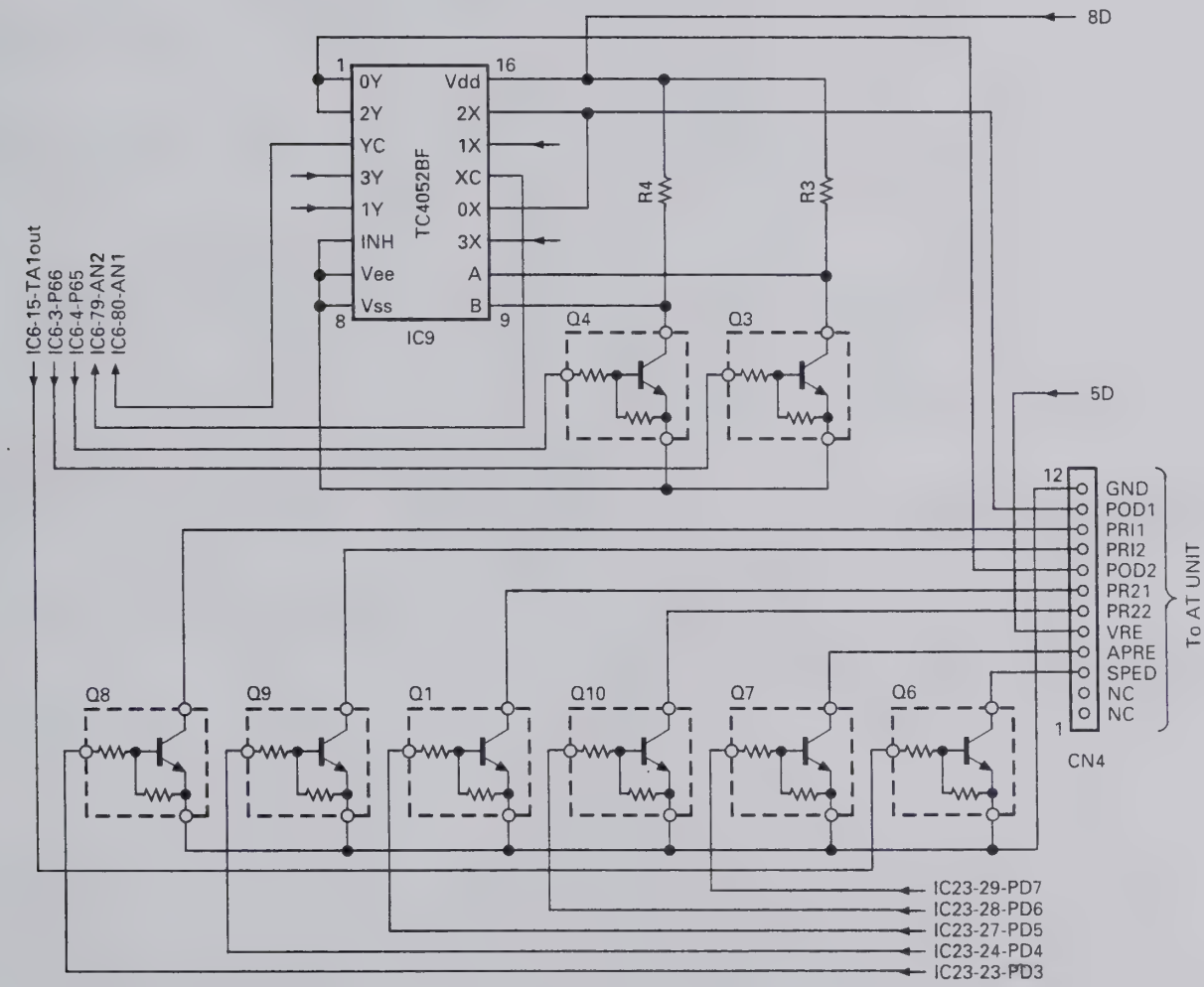

Fig. 16 AT control

CIRCUIT DESCRIPTION

■ IF filter switching

The IF filter switching signal from the control unit is controlled by PC0 to PC2 (pins 11 to 13) of IC23 and sent to the RF unit and final unit connection section.

The RF unit selects the 8.83MHz IF filter, and the final unit connection section selects the 455kHz IF filter.

The IF filter select signal is automatically interlocked with the WIDTH control.

SSB		CW		FSK		AM		FM	
WIDTH	IF FILTER	WIDTH	IF FILTER	WIDTH	IF FILTER	WIDTH	IF FILTER	WIDTH	IF FILTER
1.4k	3k	50	3k	250	3k	5.0k	6k	5.0k	15k
1.6k	↑	200	↑	500	↑	6.0k	15k	6.0k	↑
1.8k	↑	300	↑	1.0k	↑	8.0k	↑	8.0k	↑
2.0k	↑	400	↑	1.5k	↑	10.0k	↑	10.0k	↑
2.2k	↑	600	↑			12.0k	↑	12.0k	↑
2.4k	↑	1.0k	↑			14.0k	↑	14.0k	↑
2.6k	6k								
2.8k	↑								
3.0k	↑								
3.2k	↑								
3.4k	↑								
4.6k	↑								
6.0k	15k								

Table 9 IF filter selection

■ Receive band-pass filter selection

The RF BPF signal from the control unit is sent from PC6 (pin 17) of IC23 to the RF unit as serial data. The serial-to-parallel converter (TC9174F) in the RF unit converts serial data to parallel data and switches between band-pass filters.

■ Transmit low-pass filter selection

The LPF signal from the control unit is sent as serial data from PC1 (pin 12) of IC16 to the final unit filter section via the final unit connection section. The serial-to-parallel converter (TC9174F) in the final unit filter section converts serial data to parallel data and switches between low-pass filters.

■ PLL VCO data

The RF unit PLL section switches between VCOs according to the VCO band data (VB0 to VB3) output from PC4 to PC7 (pins 15 to 18) of IC16 in the control unit.

■ Electronic keyer

The TS-870S uses a dedicated IC (IC24 : 68HC05G2419553) to control the electronic keyer. The main CPU CH1 to CH4 signals switch operations to the electronic keyer IC (keyer microprocessor).

The keyer microprocessor controls the electronic keyer according to KEY SPEED VR data, DOT/DASH signal, and CH1 to CH4 signals switch operation signals from the main CPU.

The keyer microprocessor is normally at the standby mode (power save mode). Each control signal is connected to PB7 (pin 77). When this port is LOW, the standby mode is terminated.

When the standby mode is cancelled, PA7 (pin 30) outputs a HIGH signal. It is used to determine which control signal is active : CH1 to CH4, KEY SPEED VR data, or DOT/DASH signal.

PA2 (pin 25) is an input/output port that inputs KEY SPEED VR data and outputs control signal (HIGH) for VR data determination.

When a HIGH signal is output from PA2 (pin 25), C114 is charged. KEY SPEED VR data is calculated until C114 is discharged and the port goes LOW.

IRQ2 (pin 41) is an interrupt port that detects power supply voltage drop. When this port detects it, the standby mode is entered.

The keyer microprocessor outputs the key down and beep signals. The key down signal is input to IC22 (PC4 : pin 15), and the main CPU controls transmission and reception. The beep signal is input to IC29 (TC7S32F : OR gate) and output to the TX-RX unit as CKY.

The TX-RX unit determines the key jack ON/OFF and CKY level and outputs sidetone.

CIRCUIT DESCRIPTION

■ Band data

Frequency (MHz)		RF BPF (RB)		LPF	VCO				PLL	Frequency (MHz)		RF BPF (RB)		LPF	VCO				PLL
Lower limit	Upper limit	RX	TX		A	B	C	D	N	Lower limit	Upper limit	RX	TX		A	B	C	D	N
0.01	0.49	1	1	1	1	0	0	0	38	15.49	15.99	10	10	6	0	0	1	0	23
0.49	0.99	2	2						38	15.99	16.49								22
0.99	1.705								37	16.49	16.99								22
1.705	2.01	3	3						37	16.99	17.49								21
2.01	2.49			2					36	17.49	17.99								21
2.49	2.99	4	4						36	17.99	18.49								20
2.99	3.49								35	18.49	18.99								20
3.49	3.99								35	18.99	19.49								19
3.99	4.49	5	5						34	19.49	19.99								19
4.49	4.99			3					34	19.99	20.49								18
4.99	5.49								33	20.49	20.99								18
5.49	5.99								33	20.99	21.49	11	11						17
5.99	6.49								32	21.49	21.99	12	12		0	0	0	1	17
6.49	6.99								32	21.99	22.49			7					16
6.99	7.3	6	6						31	22.49	22.99								16
7.3	7.49	7	7						31	22.99	23.49								15
7.49	7.99			4	0	1	0	0	31	23.49	23.99								15
7.99	8.49								30	23.99	24.49								14
8.49	8.99								30	24.49	24.99								14
8.99	9.49								29	24.99	25.49								13
9.49	9.99								29	25.49	25.99			8					13
9.99	10.49								28	25.99	26.49								12
10.49	10.99	8	8	5					28	26.49	26.99								12
10.99	11.49								27	26.99	27.49								11
11.49	11.99								27	27.49	27.99								11
11.99	12.49								26	27.99	28.49								10
12.49	12.99								26	28.49	28.99								10
12.99	13.49								25	28.99	29.49								9
13.49	13.99								25	29.29	29.99								9
13.99	14.35	9	9						24	29.99	30								9
14.35	14.49	10	10						24										
14.49	14.99			6	0	0	1	0	24										
14.49	15.49								23										

CIRCUIT DESCRIPTION

■ Function of IC pins

1) CPU : M37702S4BFP (Control unit IC6)

Pin No.	Port name	Pin name	I/O	Function	Active level	Initial state
1	AN0	ADR0	I	VPRC, VMON, VAGC signal		
2	P67	RES	O	Reset signal output	L	H
3, 4	P66, P65	CTB, CTA	O	Analog switch select control signal B, A	H	H
5	INT2	PSW	I	Power switch inhibit signal	H	
6	INT1	BOVR	I	14V voltage drop inhibit signal		
7	INT0		I	Unused		
8, 9	TA4IN, TA4OUT	EDP1, EDP2	I	Main encoder pulse input		
10, 11	TA3IN, TA3OUT		O	Unused		L
12, 13	TA2IN, TA2OUT		O	Unused		L
14	P53	AMUT	I	AF mute signal	L	H
15	TA1OUT	SPED	O	AT motor speed control	L	H
16	P51	LCD	O	LCD and LED serial data		H
17	P50	LCK	O	LCD and LED serial clock		H
18	P47	BLK	O	LCD all off control signal	H	L
19	P46	RBK	O	RF mute signal	L	L
20	P45	14VSW	O	Power on control signal	H	H
21	P44	ECS	O	EEPROM clock		H
22	P43	EED	I/O	EEPROM data		
23	PHI			Unused		
24	RDY		I	Bus wait cancel	H	
25	HORD		I	Hold state cancel	H	
26	BYTE		I	External data bus width 8 bit setting	H	
27	CNVss		I			
28	RESET		I	Reset signal input	L	
29, 30	Xin, Xout		I	Clock signal input		
31	E		O			
32	Vss		I			
33	HLDA					
34	ALE		O			
35	BHE					
36	R/W		O	Read/write signal		
37~44	D7~D0		I/O	Bus		
45~60	A15~A0		O	Address output		
61~64	P87~P84	PB0~PB3	O	Logic key CPU control 0~3	H	L
65	TXD0	TXD0	O	Personal computer interface serial output		H
66	RXD0	RXD0	I	Personal computer interface serial input		
67	P81	RTS0	O	Personal computer interface RTS	H	L
68	CTS0	CTS0	I	Personal computer interface CTS		
69	Vcc		I			
70	AVcc		I			
71	Vref		I			
72	AVss		I			
73	Vss		I			
74	AN7	ADR7	I	Forward wave voltage (VSF)		
75	AN6	ADR6	I	Reflected wave voltage (VSR)		
76	AN5	ADR5	I	ALC meter analog input		
77	AN4		I	Unused		
78	AN3	ADR3	I	VPWR, VMIC, VDLY, VCAR signal		
79	AN2	ADR2	I	POD2, VRF, POD2, VAF signal		
80	AN1	ADR1	I	POD1, VNB, POD1, VSQL signal		

CIRCUIT DESCRIPTION

2) CPU : 68HC05G2419553 (Control unit IC24)

Pin No.	Port name	Pin name	I/O	Function	Active level	Initial state
1	VDD		I			
2~5	PB3~PB0		I	CH4 to CH1 switch input signal from IC6		
6~13	AD0~AD7		I	Unused		
14	VrefH			Unconnected		
15	VrefL		I			
16	Vss		I			
17	VDD		I			
18, 19	XOSC1, XOSC2		I	Unconnected		
20	RES		I	Reset signal input		
21, 22	OSC1, OSC2		I	Clock input		
23	PA0	DOT	I	DOT input		
24	PA1	DASH	I	Dash input		
25	PA2	SPEED VR	I/O	KEY VR data determine port		
26~29	PA3~PA6		I	Unused		
30	PA7	int contro	O	Inhibit determine control signal	H	
31~33	PG0~PG2		I	Unused		
34	TCMP		I	Unconnected		
35	PG4		I	Unused		
36	PG5	EBSY	I	Unused		
37	PG6	MBSY	I	Unused		
38	PG7		I	Unused		
39~44	PC0~PC5		I	Unused		
45	IRQ2	sleep	I	14V voltage drop determine inhibit port		
46	PC7		I	Unused		
47	VDD		I			
48	PD0		I	Unused		
49	PD1	mbusy	O	Message busy signal		
50	PD2		I	Unused		
51	PD3	pbc	O	Beep output signal		
52	PD4		I	Unused		
53	PD5	KEY	O	Key signal output		
54	PD6		I	Unused		
55	PD7		I	Unconnected		
56~59	PE0~PE3		I	Unused		
60	Vss		I			
61~64	PE4~PE7		I	Unused		
65~72	PH0~PH7		I	Unused		
73~76	PJ0~PJ3		I	Unused		
77	PB7	WAKE UP	I	Wake up inhibit		
78~80	PB6~PB4		I	Unused		

CIRCUIT DESCRIPTION

3) Extended I/O : CXD1095Q (Control unit IC16)

Pin No.	Port name	Pin name	I/O	Function	Active level	Initial state
1, 2	NC					
3~7	PB1~PB5	SHIMO1~SHIMO5	I	Destination determine port	H	
8	PB6	50W	I	50W switch signal	L	
9	PB7	UNL	I	Unlock signal	H	
10	Vss		I			
11	PC0	ENF1	O	Serial/parallel convert enable	H	L
12	PC1	UDA23	O	Serial/parallel convert data		L
13	PC2	UCK23	O	Serial/parallel convert clock		L
14	PC3	NFMT	O	Control signal except FM transmit mode	L	H
15, 16	PC4, PC5	VB3, VB2	O	VCO band data	H	L
17	PC6	VB1	O	VCO band data	H	H
18	PC7	VB0	O	VCO band data	H	L
19	NC					
20	PD0	PLE2	O	VCO2 enable	H	L
21	PD1	PLE1	O	VCO1 enable	H	L
22	PD2	PCK	O	PLL clock		L
23	PD3	PDA	O	PLL data		L
24	PD4		O	Unused		L
25	Vss		I			
26	VDD		I			
27	PD5	DLE3	O	DDS3 enable	H	L
28	PD^	DLE2	O	DDS2 enable	H	L
29	PD7	DLE1	O	DDS1 enable	H	L
30~32	D0~D2		I/O	Bus		
33, 34	NC					
35~39	D3~D7		I/O	Bus		
40	CLR		I	Port E output register clear	L	
41	ODEN		I	Output disable	L	
42	Vss		I			
43	WR		I	Write signal	L	
44	RD		I	Read signal	L	
45	CS		I	Chip select signal	L	
46~48	A0~A2		I	Address signal		
49	PE0	P TTI	I	External AT TT input	H	
50	PE1	P TSI	I	External AT TS input	H	
51	NC					
52	PE2	MBSY	I	Electronic keyer busy signal		
53	PE3		I	Unused		
54	PA0	P TTO	O	External AT TT output	H	L
55	PA1	P TSO	O	External AT TS output	H	L
56	PA2		O	Unused		L
57	Vss		I			
58	VDD		I			
59~62	PA3~PA6		O	Unused		L
63	PA7	LOGKEY	O	Electronic keyer reset	H	L
64	PB0	SHIMO0	I	Destination determine port	H	

CIRCUIT DESCRIPTION

4) Extended I/O : CXD1095Q (Control unit IC22)

Pin No.	Port name	Pin name	I/O	Function	Active level	Initial state
1, 2	NC					
3~9	PB1~PB7		I/O	DSP bus		
10	Vss		I			
11	PC0		I	Unused		
12	PC1	KEYS	I	Electronic keyer connecting determine signal	L	
13	PC2	MD	I	Microphone UP switch signal	L	
14	PC3	MU	I	Microphone DOWN switch signal	L	
15	PC4	KEYI	I	Key input signal	L	
16	PC5	PLUL	I	PLL unlock in DSP	L	
17	PC6	EOM	I	DRU-3 EOM signal	H	
18	PC7	VBSY	I	VS-2 busy signal	L	
19	NC					
20	PD0	DRST	O	DSP reset signal Normally "H"	L	H
21	PD1	VCEN	O	Electronic volume DAC enable	L	H
22	PD2	UCK22	O	Serial/parallel convert clock signal		L
23	PD3	UDA22	O	Serial/parallel convert data signal		L
24	PD4	DREN	O	DRU-3 enable signal	L	H
25	Vss		I			
26	VDD		I			
27	PD5	PLEN	O	PLL enable in DSP	H	L
28	PD6	STR	O	VS-2 start signal	H	L
29	PD7		O	Unused		L
30~32	D0~D2		I/O	Bus		
33, 34	NC					
35~39	D3~D7		I/O	Bus		
40	CLR		I	Port E output register clear	L	
41	ODEN		I	Output disable	L	
42	Vss		I			
43	WR		I	Write signal	L	
44	RD		I	Read signal	L	
45	CS		I	Chip select signal	L	
46~48	A0~A2		I	Address signal		
49	PE0	HENA	O	DSP enable A	L	H
50	PE1	HENB	O	DSP enable B	L	H
51	NC					
52	PE2	HRW	O	DSP R/W signal		H
53	PE3		O	Unused		L
54~56	PA0~PA2		O	DSP address signal		L
57	Vss		I			
58	VDD		I			
59	PA3		O	Unused		L
60	PA4	P BEEP	O	Beep output signal	H	L
61	PA5	P CKY	O	Transmit output control signal	H	L
62	PA6	P RXC	O	Receive control signal	H	H
63	PA7	P TXC	O	Transmit control signal	H	L
64	PB0		I/O	DSP bus		

CIRCUIT DESCRIPTION

5) Extended I/O : CXD1095Q (Control unit IC23)

Pin No.	Port name	Pin name	I/O	Function	Active level	Initial state
1, 2	NC					
3~9	PB1~PB7	P K1~P K7	I	Key matrix input	L	
10	Vss		I			
11	PC0	6KFIL	O	Analog filter select signal	H	L
12	PC1	3KFIL	O	Analog filter select signal	H	H
13	PC2	15KFIL	O	analog filter select signal	H	L
14~16	PC3~PC5	P ENR3~P ENR1	O	RF serial/parallel convert enable	H	L
17	PC6	P UDA21	O	Serial/parallel convert data		L
18	PC7	P UCK21	O	Serial/parallel convert clock		L
19	NC					
20~22	PD0~PD2		O	Unused		L
23	PD3	P APRE	O	AT motor control signal		L
24	PD4	P PR22	O	AT motor 2 control signal		L
25	Vss		I			
26	VDD		I			
27	PD5	P PR21	O	AT motor 2 control signal		L
28	PD6	P PR12	O	AT motor 1 control signal		L
29	PD7	P PR11	O	AT motor 1 control signal		L
30~32	D0~D2		I/O	Bus		
33, 34	NC					
35~39	D3~D7		I/O	Bus		
40	CLR		I	Port E output register clear	L	
41	ODEN		I	Output disable	L	
42	Vss		I			
43	WR		I	Write signal	L	
44	RD		I	Read signal	L	
45	CS		I	Chip select signal	L	
46~48	A0~A2		I	Address signal		
49	PE0	P THP	I	Thermal protection signal	H	
50	PE1	P SS	I	Microphone PTT switch signal	L	
51	NC					
52	PE2		I			
53	PE3		O	Unused		L
54	PA0	P DIM	O	Dimmer control signal	H	H
55, 56	PA1, PA2	P ENL3, P ENL2	O	LCD driver enable signal	H	L
57	Vss		I			
58	VDD		I			
59	PA3	P LATC	O	AT LED	H	L
60, 61	PA4, PA5	P ENL1, P ENL4	O	Switch serial/parallel convert enable	H	L
62, 63	PA6, PA7		O	Unused		L
64	PB0	P K0	I	Key matrix input	L	

CIRCUIT DESCRIPTION

TX-RX Unit (DSP Operation)

■ Outline

The TS-870S uses the DSP to carry out various processing as compared with the conventional models. They include the following:

- Modulation and demodulation
- Filter processing
- AGC processing (S-meter data output)
- Mic amplifier AGC processing
- VOX processing
- Voice equalizing processing
- Noise processing (noise reduction, beat cancel, automatic notch)
- Speech processing (COMP meter data output)
- Squelch processing
- Sidetone and beep generation

The commands and data for the microprocessor are listed below (see page 42).

The TX-RX unit circuits are divided into the analog section that processes analog signals and digital section that processes digital data. The interface between the analog and digital sections is the analog-to-digital converter (IC25 : AK5340-VS) and digital to analog converter (IC16 and IC27 : AK4318-VS, IC34 : PCM69AU).

The unit has another digital to analog converter (IC26 : M62363FP) for VCA (electronic volume : M51131L) control. The volume is controlled directly by the microprocessor in the control unit (the volume is not controlled by the DSP).

■ Digital section

The digital section is explained below. Figure 17 is a digital section block diagram.

The digital section consists of two DSPs (IC1 and IC2 : DSP56002FC40), RAM (IC7 : MCM56824AFN2*), three ROMs (IC4, IC5, IC6 : 27C256PCJJ**), and gate array (IC3 : MBCG24173-6173) and PLD (IC9 : 7032LC44JLQ*). The TX-RX unit has a PLL, but it is included in the digital section for convenience. * indicates the version number.

The PLL in the TX-RX unit is controlled directly by the microprocessor in the control unit, and clocks of a fixed frequency of 46.32MHz are generated. This circuit forms a VCO consisting of Q8 : 2SK210(GR), Q9 and Q10 : 2SC2714(Y). Q8 is an oscillator and Q9 and Q10 are buffer amplifiers. Q5, Q6, and Q7 comprise an active low-pass filter. This low-pass filter converts the output from PLL IC IC15 : MB86001PF to DC voltage and sends it to the VCO.

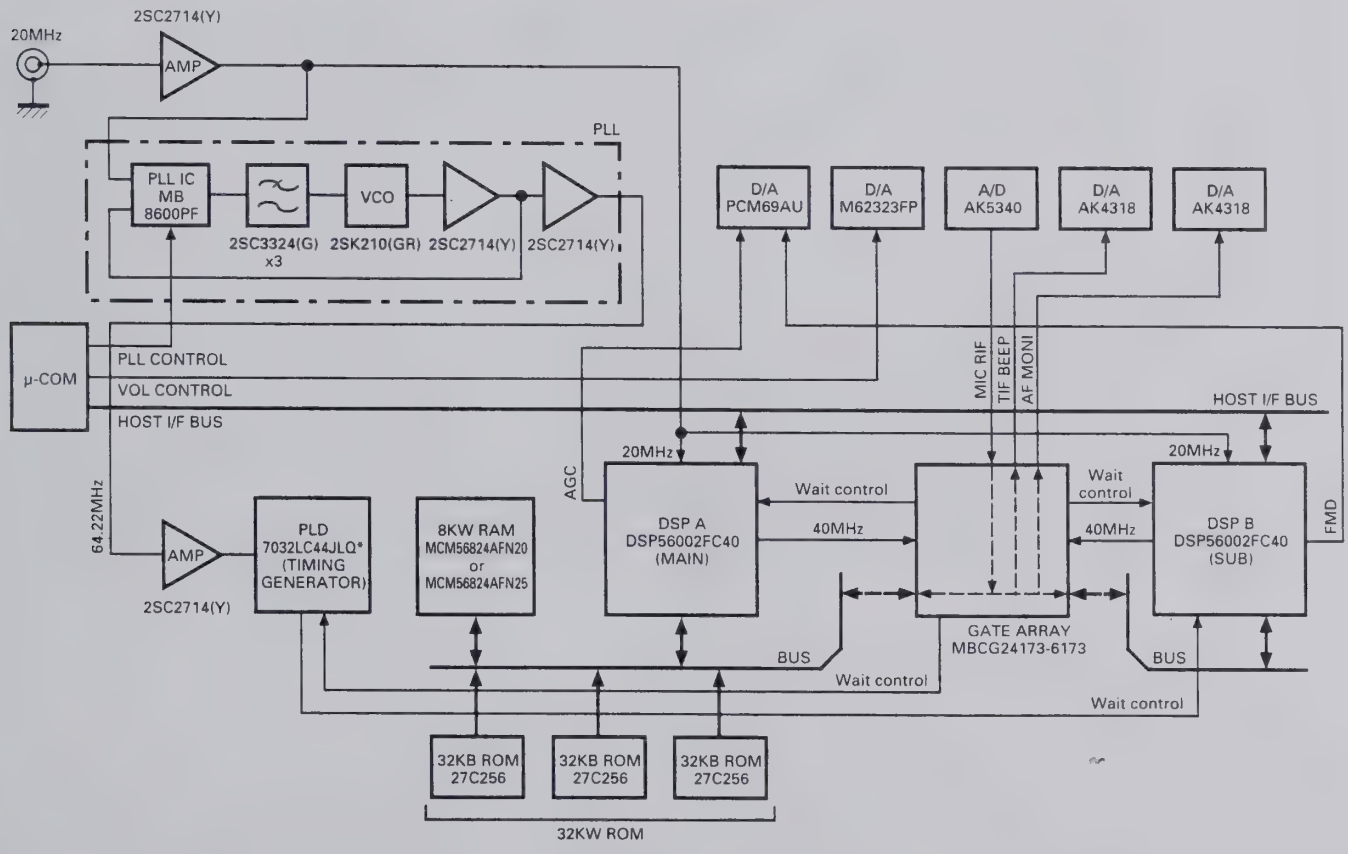

Fig. 17 Digital section block diagram

Figure 18 is a block diagram of the PLD (Programmable Logic Device). The clock with a sampling frequency fs (45.234375kHz) is generated from the 46.32MHz clock produced by the PLL in the TX-RX unit by the clock divider in the PLD. This clock is used for data transmission and reception between the analog-to-digital and digital to analog converters and gate array and data transmission and reception between the gate array, DSP, and the analog to digital and digital to analog converters. The PLD forms part of the bus control circuit for sharing the RAM and ROM with two DSPs and the circuit that accesses the ROM.

The gate array is used as the interface between the analog to digital and digital to analog converters and the DSP. Data is received from the analog to digital converter, or transmitted to the digital to analog converter, and each DSP is interrupted in the 1/fs sampling intervals. The gate array interfaces two DSPs for communication, and the two other DSPs control the bus for sharing the RAM and ROM.

The DSP has a 24 bit fixed-decimal DSP. It operates with the 40MHz clock, but the external 20MHz clock is given to the DSP. The DSP operates the 40MHz clock generated in the PLL in the IC. The clock is programmed to be output to pin 123 (CKOUT) of the DSP. Transfer of commands with the microprocessor is carried out through the host interface of the DSP.

The ROM and RAM are shared by two DSPs. When one of the DSPs is being accessed, the other DSP waits. It is carried out by the gate array and PLD. Three 8 bit ROMs are used to implement 24 bits.

The analog to digital converter (IC25 : AK5340-VS) is an 18 bit Δ-Σ type ADC for audio equipment. There are two channels, R and L. The R channel is used for the receive signal and the L channel is used for the microphone input signal. The digital to analog converter (IC16 and IC27 : AK4318-VS) is a 18 bit Δ-Σ type DAC for audio equipment. The digital to analog converter has two channels like the analog to digital converter : IC16 uses the R channel for the beep signal and the L channel for the transmit signal, and IC27 uses the R channel for the monitor signal and the L channel for the decode signal. Another digital to analog converter (IC34 : PCM69AU) is an 18 bit DAC for audio equipment, and uses the Rch for AGC and the L channel for audio signals in FM.

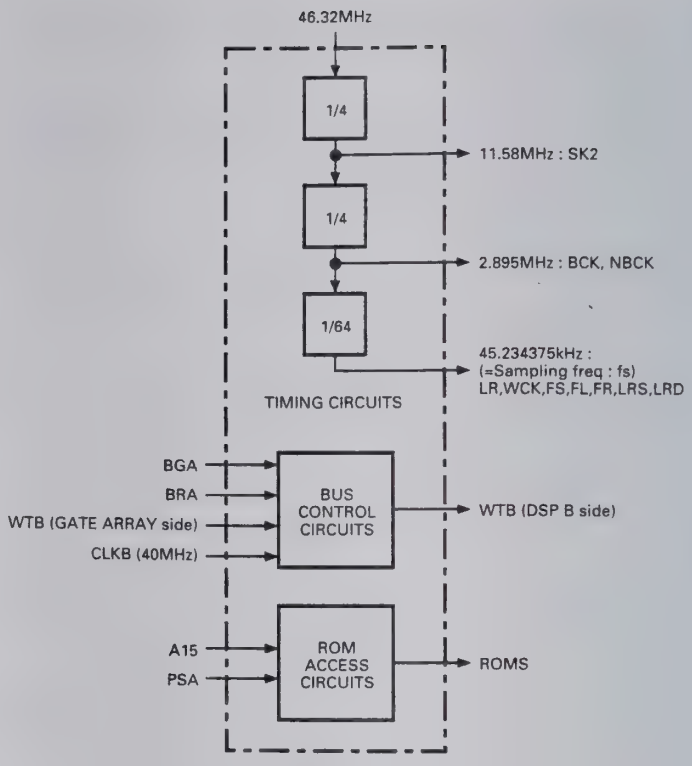

Fig. 18 PLD block diagram

■ Flow of transmit/receive signals

Flow of transmit/receive signals is explained below, together with the analog and digital sections. Flow of receive signals is explained first. See Figure 19.

The receive signal input from pin 3 (RIF) of CN1 is amplified by IC43 : NJM5532M. If a HIGH signal is input to RIF, its amplitude is limited to prevent any signal that exceeds the input range to the analog to digital converter (IC25 : AK5340-VS). The signal is passed through the band-pass filter and buffer amplifier, and its frequency is converted by the mixer (IC18 : MC74HC4053F). The frequency of the receive signal is about 1/4 of sampling frequency fs. The fs/4 frequency is the most stable frequency for digital signal processing. The receive signal of the fs/4 frequency is passed through the buffer amplifier, amplified by amplifier IC21 : NJM4560M, and converted to digital data by the analog to digital converter (IC25).

CIRCUIT DESCRIPTION

This data is read into the gate array (IC3 : MBCG 241873-6173) in sampling intervals 1/fs. The data read into the gate array is fed to the DSP in 1/fs for processing. DSP A (IC1 : DSP56002FC40) carries out auto notching, demodulation, noise processing, and squelch processing, and DSP B carries out AGC and filter processing.

AGC data, one of the DSP B operation results, is sent to the digital to analog converter (IC34 : PCM69AU) from pin 33 of DSP B (IC2: DSP56002 FC40) in 1/fs intervals. AGC data is converted to an analog current by IC34, and converted to an analog voltage by the I-V converter IC35 : AD822AR, and is output to the RF unit as the AGC voltage. The AGC voltage is reversed by the reversing amplifier IC35 : AD822AR, and the S-meter voltage used for packet communication is generated and output from the SMET terminal of ACC2 (J5).

The digital data demodulated by two DSPs is sent to the gate array in 1/fs intervals. The data is sent to the digital to analog converter (IC27 : AK4318-VS) from pin 68 of the gate array in 1/fs intervals and converted to an analog signal. The demodulate signal converted to an analog signal is passed through the third low-pass filter IC28 : NJM2100M. This low-pass filter eliminates the alias components. The demodulate signal then enters the VCA (IC29 : M51131L). The VCA attenuates and outputs the demodulate signal according to the voltage given to pin 8 of IC29. The voltage at pin 8 is the voltage corresponding to the rotational angle of the AF VOL, and is controlled by the microprocessor in the control unit. The demodulate signal is passed through the VCA, amplified by the AF amplifier (IC33 : LA4422), and output to the speaker and headphone.

Demodulation data used for packet communication is passed through low-pass filter IC28 : NJM2100M, then attenuated by the VCA IC31 : M51131L. The attenuation amount is determined by the value set on the menu. The signal is passed through the VCA and ACC2 (J5) through the buffer amplifier Q17 : 2SC 2412K(S), and output to the TNC.

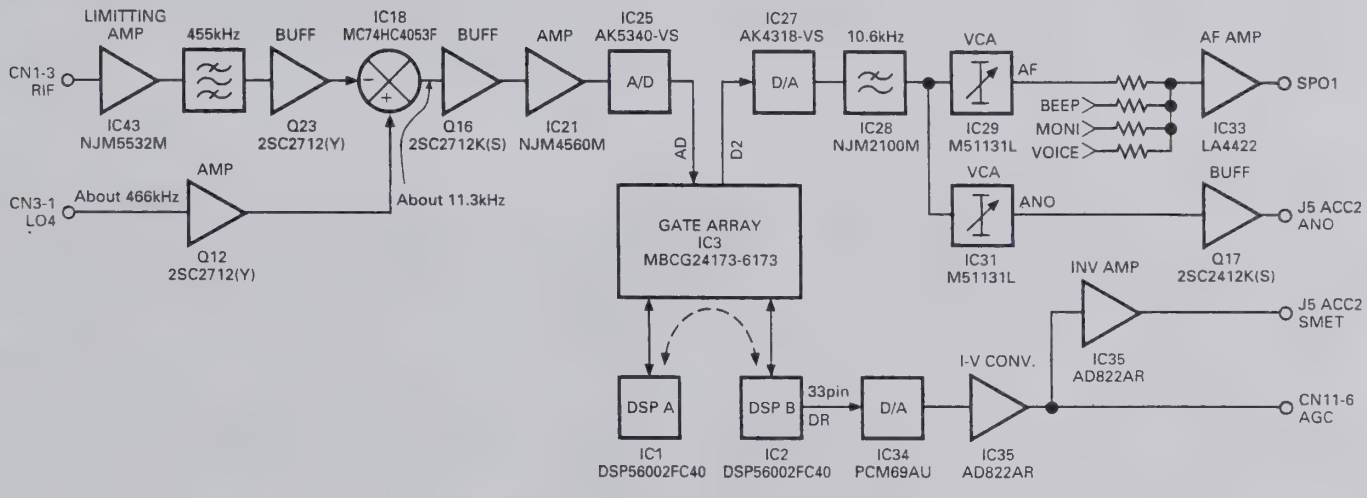

Fig. 19 Flow of receive signal

CIRCUIT DESCRIPTION

Then, flow of transmit signals is explained below. See Figure 20. If the mode is SSB, FM, or AM, the signal from the microphone is input. The signal enters the TX-RX unit through CN4. The signal is amplified by amplifier IC22 : AD822AR, and goes to the multiplexer (IC23 : MC74HC4052F). The multiplexer is used to switch between the microphone signal, the play signal from the DRU-3 (option), and packet signal. The signal passing through the multiplexer is amplified by amplifier IC24 : NJM2100M, and converted to digital data by the analog to digital converter (IC25 : AK5340-VS). The data is read into the two DSPs in the same way as for the receive signal. In transmit mode, DSP A carries out modulation, speech processing, and carrier signal generation in CW, FSK, and FM modes, while DSP B carries out VOX processing, voice equalizing processing, preemphasis processing (in FM mode), and microphone amplifier AGC processing.

The DSP does not perform modulation in FM mode. The DSP sends a 455kHz carrier signal from pin 1 (TIF) of CN1, adds subtone to the carrier signal, preemphasizes sounds, and limits the amplitude. Preemphasized audio data is sent from pin 33 of DSP A (IC1 : DSP56002FC40) to the digital-to-analog converter (IC34 : PCM69AU) in 1/fs intervals, and converted to an analog current. The analog current is converted to the audio signal of the analog voltage by the I-V converter IC36 : NJM4560M. IC36 also serves as the third low-pass filter that eliminates the alias components of the audio signal. The analog audio data signal is output from pin 3 (FMD) of CN3 to the PLL section.

The data modulated by the two DSPs (including FM carrier data) is sent to the gate array in the process as the demodulated signal. The signal is sent from pin 60 of the gate array to the digital to analog converter (IC16 : AK4318-VS) in 1/fs intervals, and converted to an analog signal. The frequency of this signal is fs/4. The analog modulated signal is passed through the third low-pass filter IC17 : NJM2100M to eliminate alias components. The signal is converted to the 455kHz IF signal by the mixer (IC18 : MC74HC4053F) and two ceramic filters (CF2 and CF3), and output from pin 1 (TIF) of CN1.

Monitor data, one of the DSP operation results, is sent to the gate array in the same process as the demodulate signal. Like the demodulate signal, the signal is sent from pin 68 of the gate array to the digital to analog converter (IC27 : AK4318-VS), and converted to an analog signal. The analog sidetone signal is passed through the third low-pass filter IC30 : NJM2100M and attenuated by VCA (IC31 : M51131L). The attenuation is determined by the rotational angle of MONI VOL. The flow of the signal after passing through the VCA is the same as for the demodulate signal.

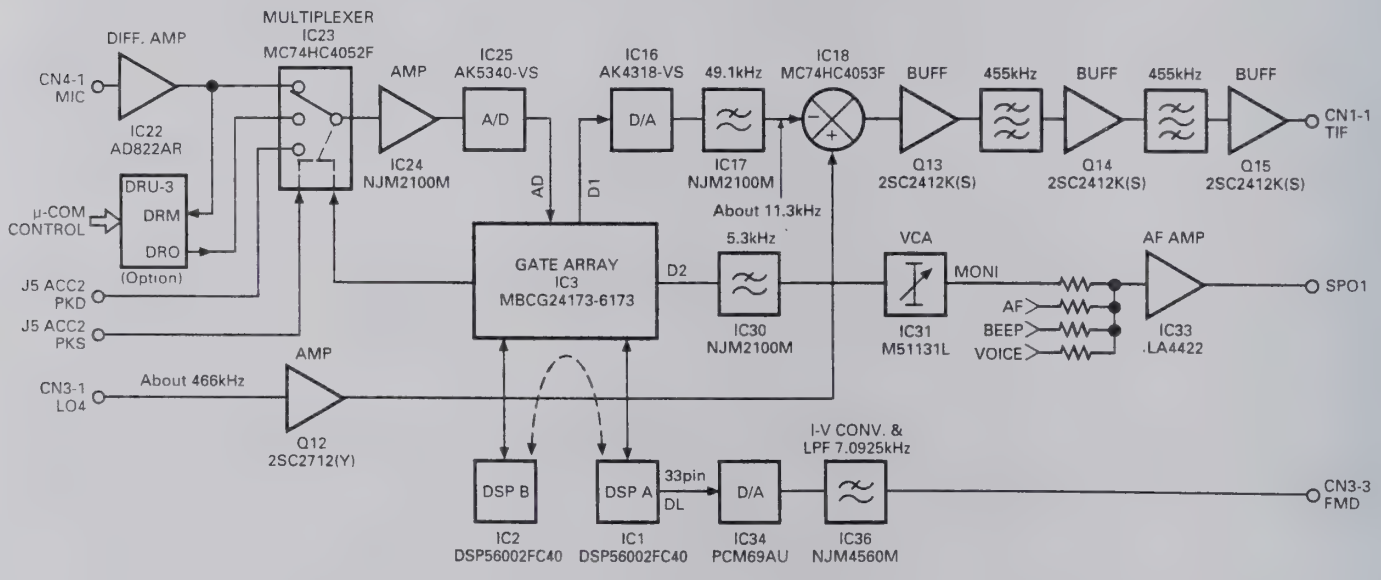

Fig. 20 Flow of transmit signal

CIRCUIT DESCRIPTION

■ Sidetone signal flow

When the electronic keyer is pressed, the sidetone is output. The sidetone is processed by DSP A. Sidetone data, a DSP A operation result, is output to the speaker or headphone in the same process as the monitor data. See Figure 21.

■ FSK tone signal flow

The flow of the FSK tone signal is the same as that of the sidetone. See Figure 21.

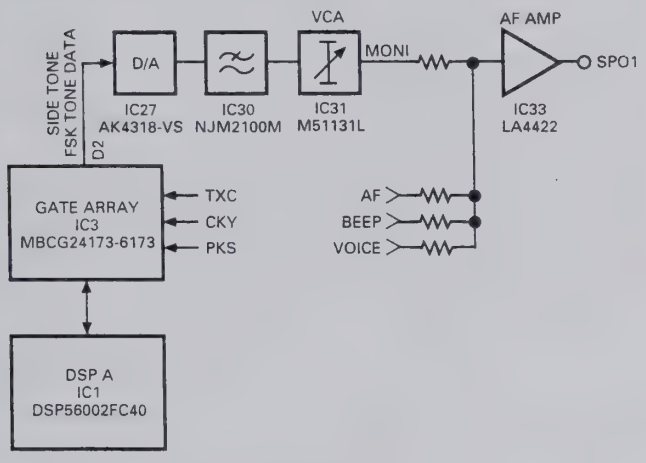

Fig. 21 Sidetone and FSK tone signal flow

■ Beep signal flow

When pin 6 (BEEP) of CN7 goes HIGH, DSP A sends beep data to the gate array in the same process as the demodulate signal. Like modulation data, the signal is sent from pin 60 of the gate array to the digital to analog converter (IC16 : AK4318-VS) in 1/fs intervals, and converted to an analog signal. The analog beep signal is passed through the primary low-pass filter IC19 : NJM4560M, and attenuated by VCA (IC29 : M51131L). The attenuation is determined by the value set on the menu. The flow of the signal after passing through the VCA is the same as for the demodulate signal.

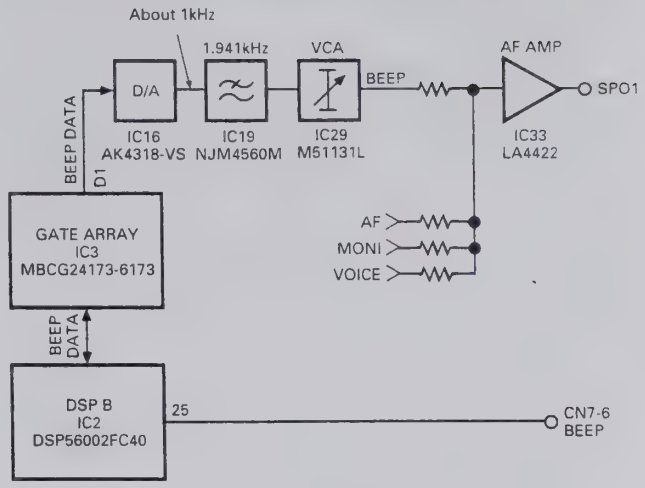

Fig. 22 Beep signal flow

■ DRU-3 recording and playback

The DRU-3 is controlled by the microprocessor in the control unit. During the DRU-3 recording, the MIC signal amplified by the differential amplifier (IC22 : AD822AR) is input to the DRU-3, and recorded. During DRU-3 playback, the playback signal is input to the analog-to-digital converter by switching the multiplexer (IC23 : MC74HC4052F). When the DSP receives a command "VOX ON and DRU playback" from the microcomputer, pin 38 of DSP B (IC2 : DSP56002FC40) goes HIGH and the SS line goes LOW. When the SS line goes LOW, the microprocessor sets the transceiver to transmit mode. This operation does not occur at the playback sound level of the DRU-3. Even if no sound is recorded, the transceiver enters the transmit mode when a DRU playback command arrives while VOX is ON. See Figure 20.

■ VS-2 audio signal flow

The audio signal output from the VS-2 is not processed by the DSP. The signal is amplified by the AF amplifier, and output to the speaker or headphone. The VS-2 is controlled by the microprocessor. See Figure 23.

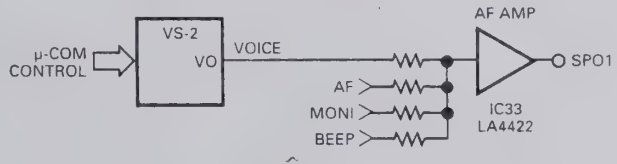

Fig. 23 VS-2 audio signal flow

CIRCUIT DESCRIPTION

■ Commands and data transferred to or from the microprocessor

To understand the DSP processing, the commands sent from the microcomputer to the DSP, and data sent from the DSP to the microcomputer are described below.

For details of error status, see the error list (Table 10).

1) Microprocessor → DSP

- Transmit mode
- Transmit filter
- CW rise (fall) time
- FSK shift width
- Squelch level
- Applicable filter follow speed
- SPAC interrelation time
- Check mode operation setting
- VOX delay time
- AGC release time
- TX AGC release time
- AGC correction
- TX equalizing
- FM modulation
- Processor compression level (LOW)
- Processor compression level (MID)
- Processor compression level (HIGH)
- RX AF AGC gain (AM/FM)
- RX AF AGC gain release time (AM/FM)
- TX AGC gain (packet input)
- Receive mode
- Receive filter
- CW pitch frequency
- FM subtone frequency
- Noise/interference elimination mode setting
- Auto notch follow speed
- Operation flag 1
- VOX gain
- RF gain (AGC)
- TX AGC gain
- AM modulation
- Carrier level
- Operation flag 2

2) DSP → Microprocessor

- S-meter data
- Compression level data
- Squelch status
- Microphone level data
- Error status
- Check mode status

Error No.	Error description
00	TX-RX unit is not connected.
01	Main DSP stack error
02	Main DSP trace error
03	Main DSP software interrupt
04	Main DSP SSI reception
05	Main DSP SSI exceptional reception
06	Main DSP SCI reception
07	Main DSP SCI exceptional reception
08	Main DSP SCI transmission
09	Main DSP SCI line idle detection
0A	Main DSP NMI
0B	Main DSP invalid command detection
0C	Command cannot be transferred from the main DSP to the sub DSP.
10	RAM check error 1
11	RAM check error 2
12	Gate array check error
21	Sub DSP stack error
22	Sub DSP trace error
23	Sub DSP software interrupt
24	Sub DSP SSI reception
25	Sub DSP SSI exceptional reception
26	Sub DSP SCI reception
27	Sub DSP SCI exceptional reception
28	Sub DSP SCI transmission
29	Sub DSP SCI line idle detection
2A	Sub DSP NMI
2B	Reserved
2C	Reserved
2D	Sub DSP invalid command detection
2E	Reserved
F0	Main DSP timeover error
F1	Sub DSP timeover error
FD	PLL unlock (TX-RX unit)
FE	PLL unlock (RF unit PLL section)
FF	Temperature protection error

Table 10 Error list

CIRCUIT DESCRIPTION

■ New function circuit

The TS-870S noise processing, auto notch, line enhancer, SPAC, and beat cancel functions are characteristics of the DSP digital signal processing. These functions and other features are described below.

1) Auto notch

The auto notch corresponds to the IF filter used in the previous models. It is an adaptive filter, and emphasizes weak signals by tracking interfering signals automatically in the AGC loop (the reception gain increases). The notch filter has very good damping and frequency characteristics in the receiving bandwidth.

2) Beat cancel

The "beat cancel" corresponds to the AF filter used in the previous models. It also is an adaptive filter, and finds and removes beat components from the received signal. Unlike the notch filter, this filter removes multiple beats, but it does not emphasize weak signals even if the beat is canceled.

3) Noise reduction

The TS-870S uses a line enhancer or SPAC to reduce noise. One of these two functions should be assigned to the N.R. key on the front panel.

The line enhancer is an adaptive filter which does not attenuate the target signal, but attenuates only noise. If the conditions are not very bad, the S/N ratio can be improved greatly.

Select SPAC to improve the S/N ratio effectively. SPAC stands for "Speech Processing System by use of Auto Correlation function." It takes the periodical signal (target reception signal) and suppresses noise using the Auto Correlation function. Since SPAC takes reception signals with a certain time width, the signals become discontinuous and cause noise.

Since the auto notch, beat cancel, and line enhancer are adaptive filters, their characteristics change according to the input signal. If the automatic tracking is set to OFF on the menu when the filter effect is good under good signal conditions, the effect does not change even if the conditions turn bad.

4) VOX

DSP processes the correlation between the received signal and signal from the microphone, and carries out the conventional anti-VOX processing. Therefore, TS-870S does not have anti-VOX.

5) SSB modulation/demodulation

TS-870S uses the PSN modulation/demodulation used for TS-950 and subsequent models. With the increase in the DSP operation precision, the side-band suppression has been improved in a very wide bandwidth from 25Hz to 6kHz (80dB or more for modulation and 90dB for demodulation). The PSN method does not eliminate all group-delay distortion because the Hilbert converter uses an IIR filter. The TS-870S uses a linear phase shifter with a Hilbert converter containing an FIR filter. As the FIR filter can keep group delay constant, it does not cause group-delay distortion. However, as the group-delay itself increases, if the linear phase shifter is set to ON via the menu, a signal is transmitted several ms after a voice enters the microphone.

■ Analog section and other circuits

The analog section and other circuits were described in the flow of transmission and reception signals. This section describes the circuits that were not explained in the flow of transmission and reception signals.

1) Reference voltage circuit

Since TS-870S does not have a negative power supply, a 2.5V reference voltage, which is half the power supply voltage, is supplied to the OP amplifier to process analog signals linearly. Fig. 24 shows this circuit. 2.5V are produced by dividing the power supply voltage by R129 and R132. This voltage is provided to the circuitry through buffer amplifier IC19 or IC20.

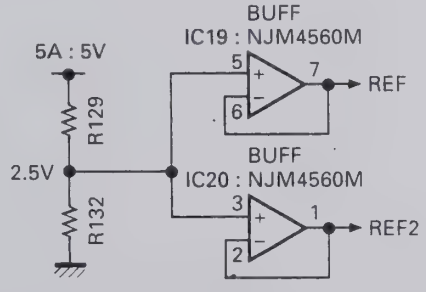

Fig. 24 Reference voltage circuit

CIRCUIT DESCRIPTION

2) Pop mute circuit

The mute circuit shown in Fig. 25 reduces the pop sound when the power is switched ON and OFF. If CN7 pin 16 AMUT is LOW, the mute circuit consisting of IC44 : TC7S04F and Q22 : DTC124EK mutes the AF amplifier (IC33 : LA4422) and suppresses the pop sound when the power is turned ON. A microprocessor controls AMUT and cancels muting at an appropriate time.

When the power is turned OFF, muting is also controlled by AMUT, but is done only if the power switch ON TS-870S is pressed. The circuit comprising Q25 : DTA143EK, Q26 : DTC124XK, and Q27 : DTC143EK suppresses the pop sound when the external power supply switch is turned OFF. When this switch is turned OFF, the voltage of the AF amplifier power supply 14A decreases. When the 14A voltage falls, Q25 becomes active (ON), and then Q26 becomes active (the collector goes LOW to mute the AF amplifier and suppress the pop sound. Q27 prevents muting when the voltage of the AF amplifier power supply 14A falls during transmission.

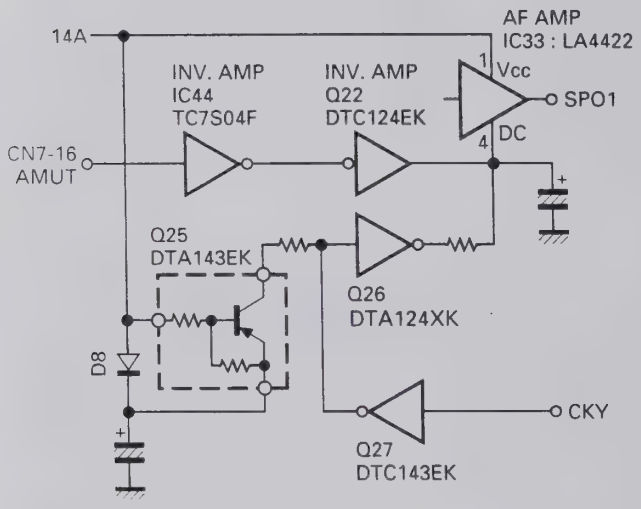

The TS-870S uses AF amplifier IC33: LA4422 pin 4 (DC) as the mute pin.

Fig. 25 Pop mute circuit

■ Transmit/receive frequency characteristics correction circuit

The transmission sound quality has a flat frequency characteristic due to DSP modulation. However, the low-frequency range is also flat to the cut-off frequency, so the model has less clarity compared to the conventional transceivers. A correction circuit is provided to suppress the low-frequency range. It consists of R141, R155, and C145 in the TX-RX unit, and it is –2dB at 300Hz for 1kHz.

To return to the flat frequency characteristic, remove C145 and replace R155 with a 1.8kΩ resistor. (See Figure 26.)

The receive frequency is also flat, as well as the hi-fi sound quality when the filter is widened. When the receive frequency is flat, the volume of the low-frequency range becomes insufficient, so a correction circuit that slightly emphasizes the low-frequency range is provided. It consists of R204, R205, R208, and C208 in the TX-RX unit, and it is +2dB at 1kHz for 3kHz.

To return to the flat frequency characteristic, remove R205. (See Figure 26.)

Transmit side

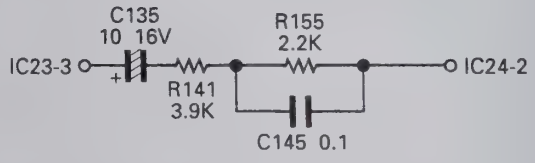

Receive side

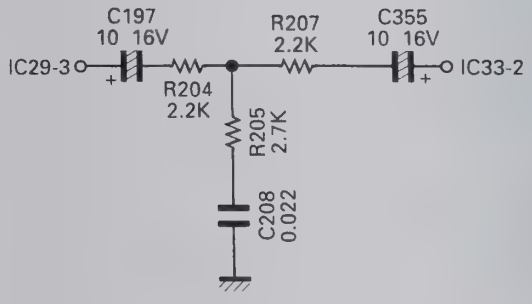

Fig. 26 Transmit/receive frequency characteristics correction circuit

DESCRIPTION OF COMPONENTS

RF UNIT (X44-3210-00) (A/9) : RF

Ref. No.	Use/Function	Operation/Condition
Q1	Switching	On when exit RX on.
Q2	Switching	On when TX.
Q3	Switching	Off when ATT1 or ATT2 on.
Q5	TX RF amplifier	Drive output (TX frequency)
Q6	Switching	DATT on
Q7	Switching	1/2 : 30kHz~490kHz 2/2 : 490kHz~1.62MHz
Q8	Switching	1/2 : 1.62MHz~2.49MHz 2/2 : 2.49MHz~3.99MHz
Q9	Switching	1/2 : 3.99MHz~6.99MHz 2/2 : 7.30MHz~10.49MHz
Q10	Switching	1/2 : 6.99MHz~7.30MHz 2/2 : 13.99MHz~14.49MHz
Q11	Switching	1/2 : 20.99MHz~21.49MHz 2/2 : 21.49MHz~30.00MHz
Q12	Switching	1/2 : 14.49MHz~20.99MHz 2/2 : 10.49MHz~13.99MHz
Q13	RF amplifier	21.49MHz~30.00MHz
Q14, 15	RF amplifier	30kHz~21.49MHz
Q16	Amplifier	LO1 : 73.08MHz~103.05MHz
Q17~20	Mixer	$f_{LO1} - f_{RF} = 73.05MHz$
Q21	Ripple filter	14S
Q22	Amplifier	73.05MHz
Q23	Mixer	73.05MHz – 64.22MHz = 8.83MHz
Q24	Amplifier/AGC	73.05MHz
Q26, 27	Mixer	73.05MHz – 64.22MHz = 8.83MHz
Q28	Amplifier	8.83MHz
Q29~31	Amplifier/AGC	8.83MHz
Q32	AGC	NB (Noise blanker)
Q33	Amplifier/AGC	8.83MHz
Q35, 36	Mixer	73.05MHz → TX f
Q37, 38	Mixer	8.83MHz → 73.05MHz
Q39	Amplifier	TX IF
Q42	Switching	RF blanking
Q43, 44	DC amplifier	ALC
Q45, 46	Switching	On when AM mode.
Q47	DC amplifier	ALC
Q48	Switching	On when AM transmission mode.
Q49	Switching	
Q50	DC amplifier	ALC amplifier
Q51	Switching	Pulse generate when AM transmission mode.
Q52	DC amplifier	ALC amplifier
Q54	Switching	Off when NB.
Q55	Switching	Make relay for linear.
Q56	Switching	On when TX.
Q57, 59	Switching	TXB generate
Q58, 60	Switching	RXB generate
Q61	Switching	On when AIP off (0~21.49MHz).
Q62	Switching	On when AIP off (21.49~30MHz).
Q63	Switching	On when AIP off.
Q64	Switching	On when AIP on.
Q65	Switching	12V when RX.
Q66	Switching	On when RX.
Q70, 71	Switching	CKY
IC1	Serial/Parallel conversion	BPF selection
IC2	Serial/Parallel conversion	
IC6	OP amplifier	ALC meter
IC7	DAC	8 ch
IC8	Meter amplifier	VSF, VSR, ALC and Processor.

DESCRIPTION OF COMPONENTS

Ref. No.	Use/Function	Operation/Condition
IC9	Comparator	NB pulse
IC10	AVR	8V → 5V
D1~3	Relay surge absorption	
D4~7	Large input protection	
D8	RF switch	On when RX.
D10	RF switch	On when TX.
D11~33, 35	RF switch	BPF switch
D36, 37	RF switch	On when AIP on.
D38, 39	RF switch	ON when 21.49MHz or more RF amplifier selection.
D40, 41	RF switch	On when 21.50MHz or less RF amplifier selection.
D42	RF switch	
D43	RF switch	LO2 (64.22MHz) switch
D46	RF switch	Noise detection
D47	RF switch	TGC voltage control
D49	RF switch	Gain control
D50	Zener diode	–6.2V stability
D51	LED	Voltage generate
D52	Zener diode	12V (ALC voltage for linear)
D53	Switch	Pulse generate
D54	Reverse current prevention	
D55	Zener diode	3V (Voltage shift)
D56	Switch	ALC
D57	LED	CKY
D58	Relay surge absorption	
D59	Reverse current prevention	RBK
D60	RF switch	On when 29MHz.
D61	RF switch	On when AIP on.
D62	RF switch	On when RX.
D63, 64	RF switch	8.83MHz filter changeover (15kHz).
D65, 66	RF switch	8.83MHz filter changeover (3kHz).
D67	RF switch	8.83MHz filter changeover (6kHz).
D68	RF switch	On when TX.
D69	RF switch	8.83MHz filter changeover (6kHz).
D70	Zener diode	6.2V (Voltage shift)
D71	Zener diode	4.7V (Voltage stability)
D72	Switch	CKY

RF UNIT (X44-3210-00) (B/9) : PLL

Ref. No.	Use/Function	Operation/Condition
Q500	Buffer	D/A buffer
Q501	Amplifier	20MHz (f_{STD})
Q502	Mixer IC506 input buffer	5.46~4.46MHz
Q503	Buffer	D/A buffer
Q504, 505	Switching	Chopper
Q506	Buffer	Output for chopper
Q507	Amplifier	LO3 (8.375MHz)
Q508	Buffer	For LO3 output
Q510	Buffer	D/A buffer
Q511	Buffer	For LO4 output
Q512	Amplifier	REF 20MHz
Q513	Tripled circuit	f_{SDT} x 3 = 60MHz
Q514, 515	Buffer	Reference oscillator 20MHz
Q516	VCO A changeover	
Q517	VCO B changeover	

DESCRIPTION OF COMPONENTS

Ref. No.	Use/Function	Operation/Condition
Q518	VCO C changeover	
Q519	VCO D changeover	
Q520	VCO A	73.08~80.54MHz
Q521	VCO B	80.54~87.54MHz
Q522	VCO C	87.54~94.54MHz
Q523	VCO D	94.54~103.05MHz
Q524	Buffer	VCO A~VCO D output (73.08~103.05MHz)
Q525	Mixer IC508 input buffer	73.08~103.05MHz
Q526	Buffer	For LO1 output
Q527	Active LPF	Comparison 1MHz
Q528, 529	Active LPF	
Q530	Amplifier	PLL IC IC507 input (18~48MHz)
Q531	Amplifier	18~48MHz
Q532	Amplifier	LO2A output (64.22MHz)
Q533	Switching	PLL unlock signal output ("H" : Unlock)
Q534~536	Active LPF	Comparison 20kHz (5kHz in FM mode)
Q537	Switching	FM modulation input on/off
Q539	Buffer	For LO2A outrput
Q800	Reference oscillator	Reference frequency 20MHz oscillation.
IC500	DDS	1.46~0.46MHz for LO1
IC501	DDS	1.625MHz for LO3
IC502	DDS	For LO4
IC503	Divider	20MHz x (1/5) = 4MHz
IC505	Mixer	1.46~0.46MHz → 5.46~4.46MHz
IC506	Mixer	5.46~4.46MHz → 54.54~55.54MHz
IC507	PLL	2~5 : Frequency division ratio input 6 : 18~48MHz input 9 : Lock voltage output 11 : Unlock output (Unlock : "L") 15 : 20MHz input
IC508	Mixer	73.05~103.05 + 54.54~55.54 = 18~48MHz
IC509	PLL	2~5 : Frequency division ratio input 6 : 64.22MHz input 9 : Lock voltage output 11 : Unlock output (Unlock : "L") 15 : 20MHz input
IC510	AVR	13.8V → +9V
IC511	AVR	13.8V → +9V low drop-out
D500	Vari-cap diode	VCO A
D501	Switching	VCO A output
D502	Vari-cap diode	VCO B
D503	Switching	VCO B output
D504	Vari-cap diode	VCO C
D505	Switching	VCO C output
D506	Vari-cap diode	VCO D
D507	Switching	VCO D output
D508	Reverse current prevention	Unlock signal detection

FINAL UNIT (X45-351X-XX) (A/5) : FINAL 0-00 : K,P,M,M2,X 2-71 : E,E2,E3,E9

Ref. No.	Use/Function	Operation/Condition
Q501	Pre-drive amplifier	Wide-band amplification of HF band
Q502, 503	Drive amplifier	Push-pull wide-band amplification of HF band
Q504	Drive bias supply	Temperature compensation of drive
Q505, 506	Final amplifier	Push-pull wide-band amplification of HF band
Q507	Final bias supply	Temperature compensation of final
D501	Temperature compensation	Temperature sensing of pre-drive
D502	Temperature compensation	Temperature sensing of drive
D503	Temperature compensation	Temperature sensing of final
D504	Reverse power connection protection	

DESCRIPTION OF COMPONENTS

FINAL UNIT (X45-351X-XX) (B/5) : FILTER

Ref. No.	Use/Function	Operation/Condition
Q1~5	Relay driver	
Q6	Switch	Antenna tuner through tune
Q10~16	Relay driver	
IC1	Band data decoder	
D1	High-frequency rectification	Reflected wave rectification
D2	High-frequency rectification	Forward wave rectification
D3	Voltage stabilization	5.1V
D4	Relay surge absorption	1.6~2.0MHz LPF relay
D5	Relay surge absorption	2.0~4.0MHz LPF relay
D6	Relay surge absorption	4.0~7.5MHz LPF relay
D7	Relay surge absorption	7.5~10.5MHz LPF relay
D8	Relay surge absorption	10.5~14.5MHz LPF relay
D9	Relay surge absorption	14.5~21.5MHz LPF relay
D10	Relay surge absorption	21.5~30.0MHz LPF relay
D11	Switching	

FINAL UNIT (X45-351X-XX) (C/5) : CONNECTION

Ref. No.	Use/Function	Operation/Condition
Q401~403	DC/DC	–6V
Q404	Ripple filter	14S → 14V
Q405	Ripple filter, AVR	
Q460, 461	Mixer	RX
Q470, 471	Mixer	TX
Q472, 475	Amplifier	TX IF
IC402	5V AVR	8V → 5V (For PLL)
D401	Rectification	
D402	Current stabilization	9V
D450	Reverse current prevention	
D451~456	RF switch	BPF switch
D457	Reverse current prevention	

FINAL UNIT (X45-351X-XX) (D/5) : AVR

Ref. No.	Use/Function	Operation/Condition
Q601	Switch	14S supply when power switch on.
Q701	Switch	On when fan operation
Q702, 703	Switch	Fan motor drive
IC601	8V AVR	13.8V → 8V (Analog 8V : 8A)
IC602	8V AVR	13.8V → 8V (Digital 8V : 8D)
IC701	Comparator	Fan control
D601	Relay surge absorption	
D701	Reverse current prevention	
D702	Surge absorption	

FINAL UNIT (X45-351X-XX) (E/5) : RELAY

Ref. No.	Use/Function	Operation/Condition
D301	Lightning surge protection	ANT1
D302	Lightning surge protection	ANT2
D303	Relay surge absorption	Antenna changeover relay
D304	Relay surge absorption	TX/RX changeover relay

DESCRIPTION OF COMPONENTS

AT UNIT (X53-3340-02)

Ref. No.	Use/Function	Operation/Condition
Q1, 2	Amplifier	Waveform shaping
Q3	Switching	On when APRE is "H".
Q4, 5	Switching	Motor speed control pulse
IC1	DFF	Phase difference detection 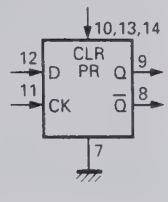 Function table INPUTS / OUTPUTS CLOCK | D | Q | Q ↑ | L | L | H L | X | Qo | $\overline{Qo}$
IC2	Analog switch	For control changeover motor 1 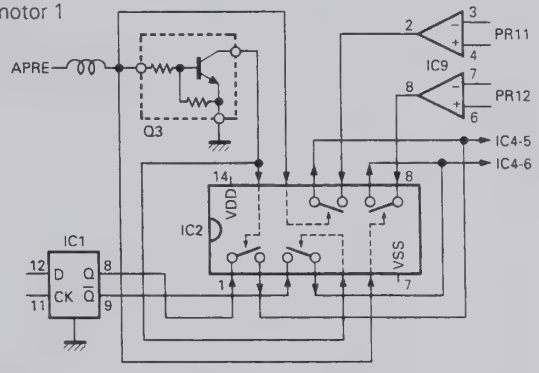
IC3	Analog switch	For control changeover motor 2 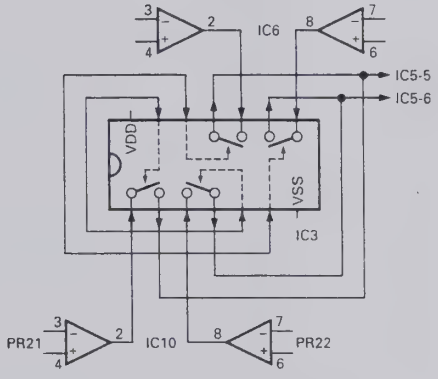
IC4	Motor drive	For motor 1 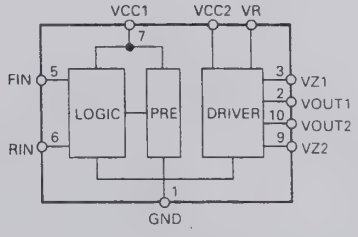
IC5	Motor drive	For motor 2
IC6	Comparator	Amplification difference detection
IC7	AVR	+5V
D1	Detector	Current component amplification detection
D2	Detector	Voltage component amplification detection
D3~8	Switching	Clipper
D10	Switching	Spike absorption
D101~103	Switching	Spike absorption
D105~108	Switching	Spike absorption
D109, 110	Switching	Band data

DESCRIPTION OF COMPONENTS

CONTROL UNIT (X53-356X-XX) (A/4) : CONTROL

0-11 : K,P 0-21 : M 0-22 : M2 0-71 : X 2-71 : E 2-72 : E2 2-73 : E3 2-74 : E9

Ref. No.	Use/Function	Operation/Condition
Q1, 2	Switching	Voltage drop changeover
Q3, 4	Switching	Multiplexer changeover
Q5	Switching	EEPROM write control changeover
Q6~11	Switching	AT control (PR11, PR12, PR21, PR22, APRE, SPED)
Q12, 13	Switching	AT-300 control and input (TS, TT)
Q14, 15	Switching	AT-300 control and output (TS, TT)
Q16	Switching	IC24 control (Reset)
Q17~19, 22	Switching	IC24 control (CH1, 2, 3, 4)
Q20, 24	Switching	IC24 control (DOT)
Q21, 23	Switching	IC24 control (DASH)
Q27	Switching	VBSY signal
Q28	Switching	KEY signal
Q29	Switching	Filter changeover (6kHz)
Q30	Switching	Filter changeover (3kHz)
Q31	Switching	Filter changeover (15kHz)
Q33	Switching	BLNK signal
IC1, 2	Regulator	5V output
IC3	Regulator	8V output
IC4	EEPROM	Adjustment data saving
IC5	Reset, Power supply changeover	System reset and Back-up power supply changeover
IC6	CPU	8 bit microcomputer (Main)
IC7, 10	Inverter	Reverse data
IC8	RAM	8K-byte
IC9, 13	Multiplexer	A/D data changeover
IC11	OR gate	RD/WR signal output
IC12	ROM	64K-byte
IC14	AND gate	Chip select combination for RAM and ROM
IC15	Bidirectional buffer	Data bus input/output changeover
IC16, 22, 23	Extended I/O	8 bit x 4, 4 bit x 1
IC17, 18	Decoder	Converts the address signal into a chip select signal for each IC.
IC19	Latch	Chip select signal latch
IC20, 21	Encoder gate array	Encoder pulse count
IC24	CPU	8 bit microcomputer (Electronic keyer)
IC25, 26	Schmitt trigger	Encoder chattering absorption
IC27	Level shift	RS-232 level shift
IC28	OP amplifier	Buffer
IC29	OR gate	CKY signal and BPC signal combination
D1~3	Protection diode	Power supply
D4	Voltage detector	Voltage drop detection (About 10V)
D5	Protection diode	Reverse current prevention
D6	Protection diode	KEYS line
D7	Protection diode	DASH line
D8	Protection diode	DOT line
D9	Protection diode	MD line
D10	Protection diode	MU line
D11	Protection diode	KEY line
D12	Protection diode	SS line

DESCRIPTION OF COMPONENTS

CONTROL UNIT (X53-356X-XX) (B/4) : SW

Ref. No.	Use/Function	Operation/Condition
Q501, 502	LED switch	
IC501~504	Serial/Parallel	Data conversion for tact switch and LED
D501, 502	LED	
D510~519	LED	

TX-RX UNIT (X57-4620-00)

Ref. No.	Use/Function	Operation/Condition
Q1	Switch	Change SS line to low when VOX active.
Q2	Amplifier	64.22MHz
Q3	Amplifier	REF 20MHz
Q4	Switch	On/Off when squelch open/close (For packet).
Q5, 7	Active LPF	
Q6	Active LPF	PLL loop filter
Q8	VCO	46.32MHz oscillation circuit
Q9, 10	VCO	Output buffer
Q12	Amplifier	LO4 466kHz
Q13, 15	Buffer	TX IF 455kHz
Q14	Amplifier	TX IF 455kHz
Q16	Buffer	Receive signal for DSP processing (11.3kHz)
Q17	Buffer	ACC2 audio output
Q22	Switch	Mute signal (Power on/off)
Q23	Buffer	RX IF 455kHz
Q25	Pulse generator	AF mute
Q26	Switch	Mute signal
Q27	Switch	Mute signal absorption (Mute inhibit when TX)
IC1	DSP A	Main DSP
IC2	DSP B	Sub DSP
IC3	Gate array	For interface
IC4	DSP ROM	Low (D0~D7) 32KB
IC5	DSP ROM	Mid (D8~D15) 32KB
IC6	DSP ROM	High (D16~D23) 32KB
IC7	DSP RAM	8K ward
IC9	PLD	Timing generator
IC15	PLL IC	46.32MHz clock generation
IC16	DAC	Rch : BEEP signal (About 1kHz) Lch : Transmission signal (11.3kHz)
IC17	Active filter	TX (fc = 49.1kHz) 3rd LPF
IC18	Mixer	RX : 455kHz → 11.3kHz TX : 11.3kHz → 455kHz
IC19	Voltage follower, Active LPF	Reference voltage buffer, BEEP LPF (fc = 1.9kHz)
IC20	Voltage follower	Reference voltage buffer
IC21	LPF, Buffer	RX IF 11.3kHz
IC22	Amplifier	Microphone amplifier, unbalanced/balanced modulation
IC23	Multiplexer	MIC, DATA, DRU-3 changeover
IC24	LPF, Buffer	TX microphone amplifier, unbalanced/balanced modulation
IC25	ADC	Rch : Reception signal Lch : Microphone input signal
IC26	DAC	VCA control
IC27	DAC	Rch : Monitor signal Lch : De-modulation signal
IC28	Active LPF	De-modulation signal (fc = 10.6kHz)
IC29	VCA (Electronic volume)	De-modulation signal, BEEP
IC30	Active LPF	Monitor signal (fc = 5.3kHz)
IC31	VCA (Electronic volume)	Packet AF, monitor
IC33	AF amplifier	Audio amplifier

DESCRIPTION OF COMPONENTS

Ref. No.	Use/Function	Operation/Condition
IC34	DAC	Rch : AGC signal Lch : FM modulation signal
IC35	I-V converter, Inverter	AGC and S-meter voltage
IC36	I-V converter, Active LPF	FM modulation signal (fc = 7.2kHz)
IC37	AVR	13.8V → Analog 5V
IC38	AVR	Digital 8V → Digital 5V
IC39	AVR	13.8V → 5V for PLL
IC40	AVR	13.8V → 8V for PLL
IC41, 42	Buffer	VCA control
IC43	Clipper amplifier	RX IF 455kHz
IC44	Inverter	Mute (Power on/off)
D1~4	Reverse current prevention	
D5	VCO bari-cap diode for DSP	64.32MHz oscillation
D7, 8	Reverse current prevention	

SEMICONDUCTOR DATA

PLL : MB86001PF (RF Unit IC507, 509, TX-RX Unit IC15)

■ Terminal connection diagram

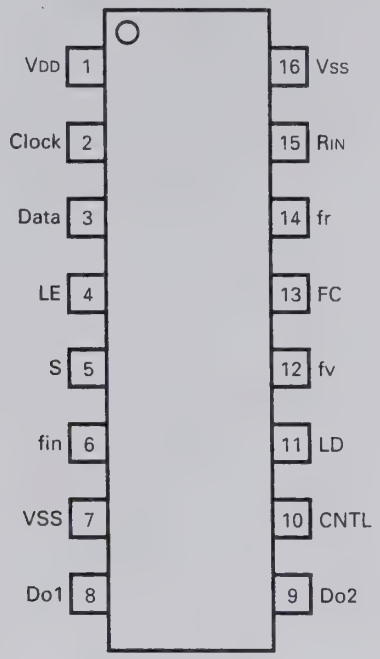

■ Terminal functions

Pin No.	Pin code	I/O	Function
1	VDD	–	Power supply pin.
2	Clock	I	Shift register clock input pin. Serial data is taken in at the rising edge of the clock signal. The input section contains a Schmitt trigger circuit.
3	Data	I	Serial data input pin for setting the divide ratio of each divider. The input section contains a Schmitt trigger circuit.
4	LE	I	Shift register load enable signal input pin. When LE is high, the divider ratio data is transferred to the latch specified by the control bit. This data is used as the divide ratio of each divider. The input section contains a Schmitt trigger circuit.
5	S	I	Switch pin for selecting the latch for setting the divide ratio of each divider. When the S pin is low, latch V1 is selected. When the S pin is high, latch V2 is selected. The divide ratio data is then sent to the divider.
6	fin	I	Divider input pin. The input section contains a bias circuit and an amplifier. Connect the voltage control oscillator (such as a VCO) by AC-coupling.
7	Vss	–	Ground pin.
8	Do1	O	Phase comparator output pin (charge pump). The Do1 output level can be reversed by FC. The reference divider output fr and divider output fv are related as follows. On when CNTL is low fr > fv : High level (FC : Low), Low level (FC : High), fr = fv : High impedance, fr < fv : Low level (FC : Low), High level (FC : High)
9	Do2	O	Phase comparator output pin (charge pump). The relationships between the reference divider output fr and divider output fv are the same as for Do1. On when CNTL is high.
10	CNTL	I	Pin that controls charge pump outputs Do1 and Do2. The relationships between CNTL, Do1 and Do2 are as follows. When CNTL is low, Do1 : Output, Do2 : High impedance. When CNTL is high, Do1 : High impedance, Do2 : Output
11	LD	O	Phase comparator output pin. When PLL is locked, LD is high. When PLL is unlocked, LD is low.
12	fv	O	Divider division output monitor pin. A signal is output from the pin in monitor mode. Normally, this pin has high impedance.
13	FC	I	Phase comparator input switch pin.
14	fr	O	Reference divider division output monitor pin. A signal is output from this pin in monitor mode. Normally, this pin has high impedance.
15	RIN	I	Reference divider input pin. The input section contains a bias circuit and an amplifier. Connect the reference oscillator (such as TCXO) by AC-coupling.
16	Vss	–	Ground pin.

SEMICONDUCTOR DATA

Bidirectional buffer : TC74VHC245F (COntrol Unit IC15)

■ Terminal connection diagram

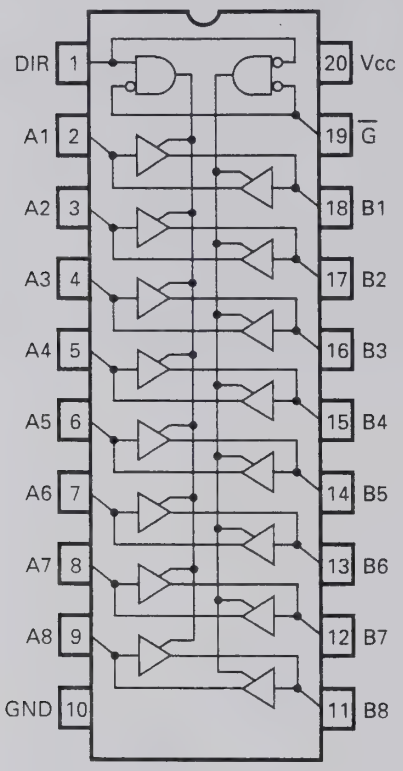

■ Logic diagram

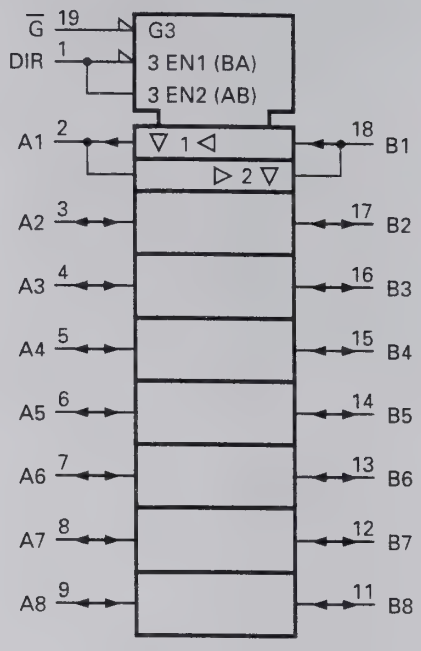

■ Truth table

Input		Function		Output
$\overline{G}$	DIR	A bus	B bus	state
L	L	Output	Input	A=B
L	H	Input	Output	B=A
H	X	High impedance		Z

X : Don't Care Z : High impedance

SEMICONDUCTOR DATA

DC/AC Converter : AK4318-VS (TX-RX Unit IC16, 27)

■ Terminal connection diagram

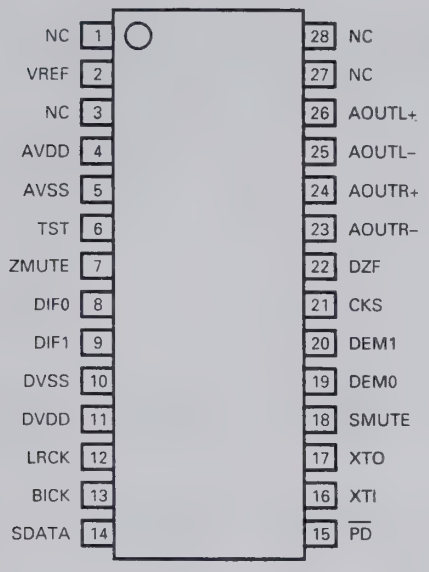

■ Block diagram

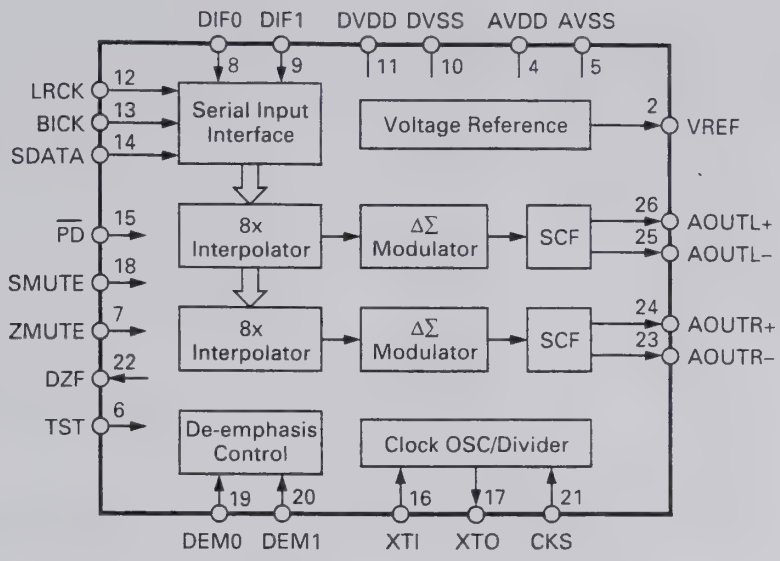

■ Terminal functions

Pin No.	Pin name	I/O	Function
1	NC	–	
2	VREF	O	Reference voltage output pin (AVDD) – 3.75V. The 10µF electrolytic capacitor and 0.1µF ceramic capacitor are connected between VREF and AVDD.
3	NC	–	
4	AVDD	–	Analog power supply pin (+5V).
5	AVSS	–	Analog ground pin.
6	TST	I	Test pin (pull down). Must be open or low.
7	ZMUTE	I	Zero mute pin (pull down). High : Detects zero and mutes output.
8, 9	DIF0, DIF1	I	Input format pin. Supports four modes.
10	DVSS	–	Digital ground pin.
11	DVDD	–	Digital power supply pin (+5V).
12	LRCK	I	L/R clock pin. Determines the input serial data channel.
13	BICK	I	Serial bit clock pin. The clock latches serial data.
14	SDATA	I	Serial data input pin. Number two's complement MSB first.
15	$\overline{PD}$	I	Reset pin. When this pin goes low, the filter and modulator are reset. Make this pin low to reset the filter and modulator when the power is turned on.
16	XTI	I	Clock input pin. Connect a crystal oscillator between XTI and XTO or input the external CMOS clock to XTI. The clock frequency can be selected with the CKS pin.
17	XTO	O	Crystal oscillator output pin. If the crystal oscillator is used, connect it between the XTO and XTI pins. If the external clock is used, open this pin.
18	SMUTE	I	Soft mute pin (pull down). High : Soft mute, Low : Cancel
19, 20	DEM0, DEM1	I	De-emphasis mode pin. Supports three frequencies.
21	CKS	I	Clock select pin. Low : CLK 256 fd, High : CLK 384 fs
22	DZF	O	Zero input detection pin. High when the data input to the SDATA pin for both channels becomes zero 8192 times consecutively.
23	AOUTR–	O	Right-channel analog negative output pin.
24	AOUTR+	O	Right-channel analog positive output pin.
25	AOUTL–	O	Left-channel analog negative output pin.
26	AOUTL+	O	Left-channel analog positive output pin.
27, 28	NC	–	

SEMICONDUCTOR DATA

AC/DC Converter : AK5340-VS (TX-RX Unit IC25)

■ Terminal connection diagram

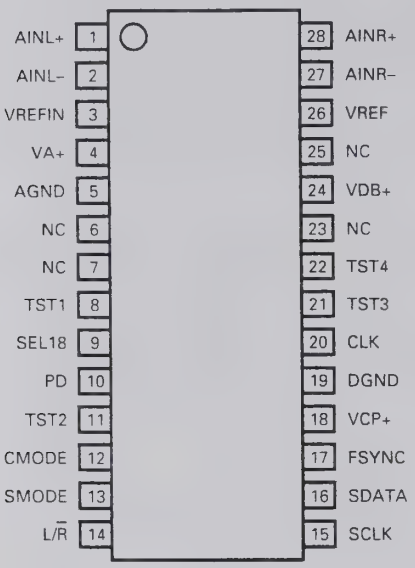

■ Block diagram

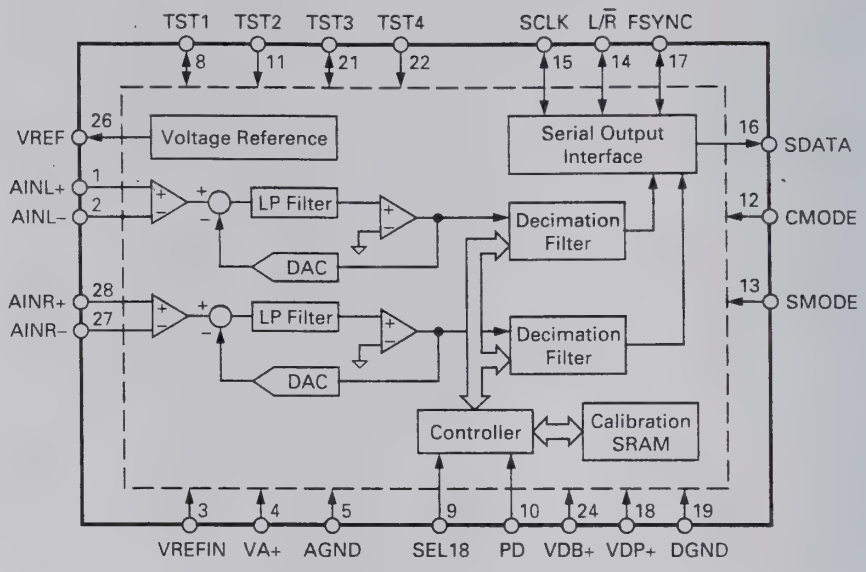

■ Terminal functions

Pin No.	Pin name	I/O	Function
1	AINL+	I	Left-channel analog non-inverted input pin.
2	AINL–	I	Left-channel analog inverted input pin.
3	VREFIN	I	Reference voltage input pin. Normally connect to the VREF pin. The input range is 1.6 times the difference between VA+ and the voltage input to this pin.
4	VA+	–	Analog section analog power supply pin (+5V).
5	AGND	–	Analog section analog ground pin.
6, 7	NC	–	
8	TST1	–	Test pin. Open or connect to DGND.
9	SEL18	I	Output data length select pin (with pull down resistor). Low : 16 bits, High : 18 bits
10	PD	I	Power down pin. High : Power down mode. Offset calibration starts at a falling edge. When the power is turned on or the clock frequency is changed, calibration must be carried out.
11	TST2	–	Test pin. Open or connect to DGND.
12	CMODE	I	Master clock select pin. Low : CLK 256 fs (12.288MHz @fs : 48kHz), High : CLK 384 fs (18.432MHz @fs : 48kHz)
13	SMODE	I	Interface clock select pin. Set the input/output of each of the L/R̄, SCLK, and FSYNC clock pins. Low : Save mode (all input pins), High : Master mode (all output pins)
14	L/R̄	I/O	Input channel select pin. Slave mode : The fs clock is input. Lch MSB data is output at a rising edge and Rch MSB data is output at a falling edge of the clock signal. Master mode : The fs clock is output. SDATA is output one clock after the L/R̄ edge. High when the power is down (PD : High).
15	SCLK	I/O	Serial data clock pin. One bit of data is output at a falling edge of the clock. Slave mode : Normally a 32 to 64 fs clock is input. Master mode : A 64 fs clock is output. Low when the power is down (PD : High).
16	SDATA	O	Serial data output pin. Data is number two's complement and the MSB is output first. Goes low after 16/18 bits are output. Low when the power is down (PD : High).
17	FSYNC	I/O	Frame synchronization clock pin. Slave mode : SDATA output is enabled when the pin is high. Master mode : The 2 fs clock is output. High when 16-bit data is output. The two low-order bits are low when 18-bit output is selected. Low when the power is down (PD : High).
18	VDP+	–	Digital section power supply pin (+5V).
19	DGND	–	Digital section ground pin.
20	CLK	I	Master clock input pin. When CMODE is high, CLK : 384 fs. When CMODE is low, CLK : 256 fs.
21, 22	TST3, TST4	–	Test pin. Open or connect to DGND.

SEMICONDUCTOR DATA

Pin No.	Pin name	I/O	Function
23	NC	–	
24	VDB+	–	Digital section power supply pin (+5V). (Silicon PCB potential)
25	NC	–	
26	VREF	O	Reference voltage output pin (VA+) – 2.6V. Output based on VA+. Normally connect this output to the VREFIN pin
27	AINR–	I	Right-channel analog inverted output pin.
28	AINR+	I	Right-channel analog non-inverted output pin.

DC/AC Converter : PCM69AU (TX-RX Unit IC34)

■ Terminal connection diagram

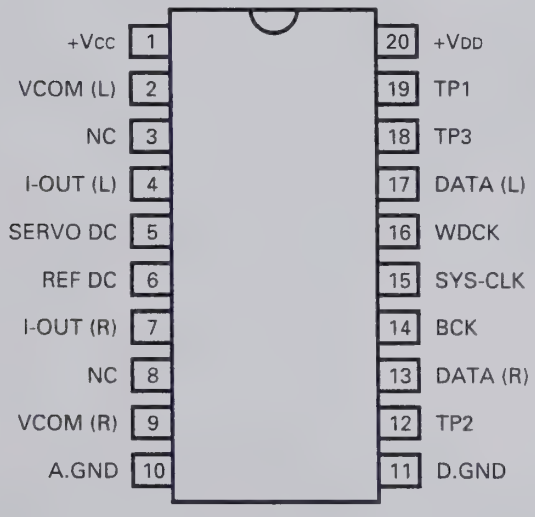

■ Terminal functions

Pin No.	Pin name	Function
1	+VCC	Analog Positive power supply
2	VCOM (L)	Lch V common
3	NC	
4	I-OUT (L)	Lch current output
5	SERVO DC	Servo filter
6	REF DC	Reference filter
7	I-OUT (R)	Rch current output
8	NC	
9	VCOM (R)	Rch V common
10	A. GND	Analog common
11	D. GND	digital common
12	TP2	Test pin 2
13	DATA (R)	Rch data input
14	BCK	Bit clock input
15	SYS-CLK	System clock input
16	WDCK	Word clock input
17	DATA (L)	Lch data input
18	TP3	Test pin 3
19	TP1	Test pin 1
20	+VDD	Digital positive power supply

PARTS LIST

CAPACITORS

CC 45 TH 1H 220 J
1 2 3 4 5 6

1 = Type ... ceramic, electrolytic, etc.
2 = Shape ... round, square, ect.
3 = Temp. coefficient
4 = Voltage rating
5 = Value
6 = Tolerance

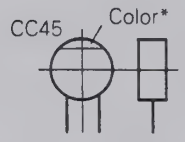

• Capacitor value

010 = 1pF
100 = 10pF
101 = 100pF
102 = 1000pF = 0.001µF
103 = 0.01µF

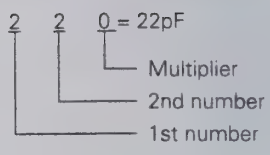

• Temperature coefficient

1st Word	C	L	P	R	S	T	U
Color*	Black	Red	Orange	Yellow	Green	Blue	Violet
ppm/°C	0	–80	–150	–220	–330	–470	–750

2nd Word	G	H	J	K	L
ppm/°C	±30	±60	±120	±250	±500

Example : CC45TH = –470 ± 60ppm/°C

• Tolerance

Code	C	D	G	J	K	M	X	Z	P	No code
(%)	±0.25	±0.5	±2	±5	±10	±20	+40 –20	+80 –20	+100 –0	More than 10µF – 10 ~ +50 Less than 4.7µF –10 ~ +75

Less than 10pF

Code	B	C	D	F	G
(pF)	±0.1	±0.25	±0.5	±1	±2

• Voltage rating

1st word \ 2nd word	A	B	C	D	E	F	G	H	J	K	V
0	1.0	1.25	1.6	2.0	2.5	3.15	4.0	5.0	6.3	8.0	–
1	10	12.5	16	20	25	31.5	40	50	63	80	35
2	100	125	160	200	250	315	400	500	630	800	–
3	1000	1250	1600	2000	2500	3150	4000	5000	6300	8000	–

• Chip capacitors (Refer to the table above except dimension)

(EX) CC 73 F SL 1H 000 J
1 2 3 4 5 6 7
(Chip) (CH, RH, UJ, SL)

(EX) CK 73 F F 1H 000 Z
1 2 3 4 5 6 7
(Chip) (B, F)

RESISTORS

• Chip resistor (Carbon)

(EX) RD 73 E B 2B 000 J
1 2 3 4 5 6 7
(Chip) (B,F)

• Carbon resistor (Normal type)

(EX) RD 14 B B 2C 000 J
1 2 3 4 5 6 7

1 = Type ... ceramic, electrolytic, etc.
2 = Shape ... round, square, ect.
3 = Dimension
4 = Temp. coefficient
5 = Voltage rating
6 = Value
7 = Tolerance

Dimension

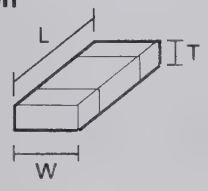

• Dimension (Chip capacitor)

Dimension code	L	W	T
Empty	5.6 ± 0.5	5.0 ± 0.5	Less than 2.0
E	3.2 ± 0.2	1.6 ± 0.2	Less than 1.25
F	2.0 ± 0.3	1.25 ± 0.2	Less than 1.25

• Dimension (Chip resistor)

Dimension code	L	W	T	Wattage
E	3.2 ± 0.2	1.6 ± 0.2	0.57	2B
F	2.0 ± 0.3	1.25 ± 0.2	0.45	2A

Rating wattage

Code	Wattage	Code	Wattage	Code	Wattage
2A	1/10W	2E	1/4W	3A	1W
2B	1/8W	2H	1/2W	3D	2W
2C	1/6W				

PARTS LIST

*New Parts. ⚠ indicates safety critical components.
Parts without **Parts No.** are not supplied.
Les articles non mentionnes dans le **Parts No.** ne sont pas fournis.
Teile ohne **Parts No.** werden nicht geliefert.

L : Scandinavia **K**: USA **P** : Canada
Y: PX (Far East, Hawaii) **T**: England **E** : Europe
Y: AAFES (Europe) **X**: Australia **M**: Other Areas

TS-870S

Ref. No.	Address	New parts	Parts No.	Description	Destination
			TS-870S		
1	1B	*	A01-2097-01	METALLIC CABINET (UPPER)	
2	3B	*	A01-2098-01	METALLIC CABINET (LOWER)	
33	3A,2D	*	A62-0382-02	PANEL ASSY	
3	2C	*	A62-0384-02	PANEL	
4	2D	*	B10-1227-03	FRONT GLASS	
5	2D	*	B11-1123-04	REFLECTOR	
6	1E	*	B38-0736-05	DISPLAY ASSY	
7	2B		B42-3343-04	S/NO LABBL	
8	3N		B42-5526-04	STICKER	K
9	2C		B43-1045-04	BADGE (KENWOOD)	
10	2C	*	B43-1101-04	BADGE (DSP)	
11	3N		B44-2163-04	UPC CORD LABEL	
12	1O		B46-0310-03	WARRNTY CARD	EE2E3E9
12	1O		B46-0410-40	WARRNTY CARD	K
12	1O		B46-0422-00	WARRNTY CARD	P
13	1O	*	B62-0542-00	INSTRUCTION MANUAL (ENGLISH)	
14	1O	*	B62-0543-00	INSTRUCTION MANUAL (SPANISH)	MM2E2E3
15	1O	*	B62-0544-00	INSTRUCTION MANUAL (NETHERLAND)	MM2E2E3
16	1O	*	B62-0545-00	INSTRUCTION MANUAL (FRENCH)	PMM2
16	1O	*	B62-0545-00	INSTRUCTION MANUAL (FRENCH)	E2E3E9
17	1O	*	B62-0546-00	INSTRUCTION MANUAL (GERMAN)	E
18	1O	*	B62-0547-00	INSTRUCTION MANUAL (ITALIAN)	E
19	2B	*	B72-0911-04	MODEL NAME PLATE	KMM2XP
19	2B	*	B72-0912-04	MODEL NAME PLATE	EE2E3E9
20	1H		E04-0167-05	RF COAXIAL CABLE RECEPTACLE (M)	
21	1N		E07-0751-05	DIN PLUG (7P) ACSY	
22	1N		E07-1351-05	DIN PLUG (13P) ACSY	
23	1H		E23-0992-04	EARTH LUG (ANT)	
24	1N	*	E30-3157-15	DC CORD ACSY	
W51	2K,3K		E31-3433-05	LEAD WIRE WITH MINIPIN PLUG	
W52	3I,4K		E37-0062-05	LEAD WIRE WITH MINIPIN PLUG	
W53	2I,4K	*	E37-0518-05	LEAD WIRE WITH MINIPIN PLUG	
W54	1I,2I	*	E37-0519-05	LEAD WIRE WITH MINIPIN PLUG	
W56	1J,2K	*	E37-0521-05	LEAD WIRE WITH MINIPIN PLUG	
W57	1I,4K	*	E37-0522-05	LEAD WIRE WITH MINIPIN PLUG	
W58	1I	*	E37-0523-05	FLAT CABLE	
W59	2I,1J	*	E37-0524-05	FLAT CABLE	
W60	2A	*	E37-0526-05	FLAT CABLE	
W61	2A	*	E37-0527-05	FLAT CABLE	
W62	3I	*	E37-0528-05	FLAT CABLE	
W63-1	4J	*	E37-0529-05	FLAT CABLE	
W63-2	3I,4I	*	E37-0529-05	FLAT CABLE	
W64	4J	*	E37-0530-05	FLAT CABLE	
W65	3I	*	E37-0531-05	FLAT CABLE	
W66	3I,4I	*	E37-0532-05	FLAT CABLE	
W67	2A	*	E37-0533-05	FLAT CABLE	
W68	2A	*	E37-0534-05	FLAT CABLE	
W69	2I,4I	*	E37-0535-05	LEAD WIRE WITH MINIPIN PLUG	
W70	2A	*	E37-0537-05	LEAD WIRE WITH CONNECTOR	
W71	1I,1J	*	E37-0538-05	LEAD WIRE WITH CONNECTOR	
W72	1I,4K	*	E37-0540-05	LEAD WIRE WITH CONNECTOR	
W73	1I,1J	*	E37-0541-15	LEAD WIRE WITH CONNECTOR	
W74	1K	*	E37-0542-05	LEAD WIRE WITH CONNECTOR	
W75	2J	*	E37-0543-05	LEAD WIRE WITH CONNECTOR	
W76	2A	*	E37-0547-15	LEAD WIRE WITH CONNECTOR (SP)	
W77	2J	*	E37-0548-05	LEAD WIRE WITH CONNECTOR	
W78	2I,4I	*	E37-0549-05	LEAD WIRE WITH CONNECTOR	
W79	2A	*	E37-0550-15	LEAD WIRE WITH CONNECTOR	
W80	2I,4J	*	E37-0551-05	LEAD WIRE WITH CONNECTOR	
W81	1I,4I	*	E37-0552-05	LEAD WIRE WITH CONNECTOR	
W82	2K,3K	*	E37-0569-05	LEAD WIRE WITH MINIPIN PLUG	
W83	–	*	E37-0570-05	LEAD WIRE WITH CONNECTOR (VS-2)	
26	1N		F05-2531-05	FUSE (25A/32V) ACSY	
27	1N		F06-4029-05	FUSE (4A/250V) ACSY	
28	2G	*	F09-0449-05	FAN MOTOR	
29	3G		F10-1206-04	SHIELDING COVER (EARTH SPRING)	
30	2B,1G		F10-1468-13	SHIELDING COVER (FINAL)	
31	1G		G02-0574-04	FLAT SPRING (AVR)	
32	2G	*	G02-0767-04	FLAT SPRING (THERMMISTOR)	
34	1A		G10-0697-04	FIBROUS SHEET (SP)	
35	1D		G10-0702-04	FIBROUS SHEET (SUB 2)	
36	1A		G10-0703-04	FIBROUS SHEET (CASE)	
39	1B		G13-0934-04	CUSHION (UPPER CASE)	
40	2G		G13-1310-04	CUSHION (FAN)	
41	4F	*	G13-1327-04	CUSHION (DRU-3)	
42	2D	*	G13-1480-04	CUSHION (KNOB)	
43	2D	*	G13-1481-04	CUSHION (KNOB)	
44	2D	*	G13-1482-04	CUSHION (KNOB)	
45	2D	*	G13-1483-04	CUSHION (KNOB)	
46	1A	*	G13-1498-04	CUSHION (SP)	
47	3B	*	G13-1511-04	CUSHION (LOWER CASE)	
50	2N	*	H10-2791-01	POLYSTYRENE FOAMED FIXTURE (F)	
51	2O	*	H10-2792-11	POLYSTYRENE FOAMED FIXTURE (R)	
52	1N	*	H13-0963-04	CARTON BOARD	
53	2O		H20-1437-03	PROTECTION COVER	
54	1N		H25-0029-04	BAG (FUSE)	
55	1N		H25-0079-04	BAG (MIC)	
56	1N		H25-0708-04	BAG (DC CORD)	
57	2O	*	H52-0730-02	ITEM CARTON CASE	
58	3O	*	H62-0641-03	OUTER PACKING CASE	
59	3B		J02-0049-14	FOOT (REAR)	
60	1A,3A		J02-0441-05	FOOT (SIDE)	
61	3A	*	J02-0474-05	FOOT (FRONT)	
62	2G		J21-4326-03	HARDWARE FIXTURE (FAN)	
63	1D	*	J21-4496-05	HARDWARE FIXTURE (PHONE JACK)	
64	2D		J31-0141-04	COLLAR (MIC)	
65	2H	*	J32-0923-04	HEXAGON BOSS	
–			J61-0307-05	BAND	
70	1B		K01-0416-05	HANDLE ASSY	
71	2C	*	K21-1102-04	KNOB (MAIN : WITH SCREW)	
72	2C	*	K29-4966-04	KNOB RING (MAIN)	
73	2D	*	K29-4967-03	KNOB (FILTER)	
74	2C	*	K29-4968-03	KNOB (M.CH,RIT : WITH SPRING)	
75	2C	*	K29-4969-03	KNOB (INSIDE)	
76	2C	*	K29-4970-03	KNOB (OUTSIDE)	
77	1C	*	K29-4978-03	KNOB (POWER)	
78	1D	*	K29-4979-03	KNOB (UP/DOWN)	

PARTS LSIT

TS-870S
RF UNIT (X44-3210-00)

Ref. No.	Address	New parts	Parts No.	Description	Destination
79	1C	*	K29-4980-03	KNOB (ANT, etc.)	
80	1D	*	K29-4981-03	KNOB (LED)	
81	1C,1D	*	K29-4982-03	KNOB (AT TUNE, etc.)	
82	1D	*	K29-4983-03	KNOB (LED)	
83	1C	*	K29-4984-03	KNOB (QUICK MEMO)	
84	1C	*	K29-4985-03	KNOB (LSB/USB)	
85	1C	*	K29-4986-03	KNOB (CW/-R)	
86	1C	*	K29-4987-03	KNOB (FSK/-R)	
87	1C	*	K29-4988-03	KNOB (FM/AM)	
88	1D	*	K29-4989-03	KNOB (AUTO NOTCH)	
89	1D	*	K29-4990-03	KNOB (BEAT CANCEL)	
90	1D	*	K29-4991-03	KNOB (N.R)	
91	1D	*	K29-4992-03	KNOB (TX EQ.)	
A	1H		N09-0372-04	SCREW (DC)	
B	1H		N09-0682-04	SCREW (GND)	
C	3F		N09-2051-05	SCREW	X
D	1H		N11-0040-46	FLANGE NUT (GND)	
E	1H		N14-0509-05	NUT (GND)	
F	1H		N15-1040-46	FLAT WASHER (GND)	
G	1D,1E		N32-2606-46	FLAT HEAD SCREW	
H	2A,3A		N32-3006-46	FLAT HEAD SCREW (SUB PANEL)	
I	1B,3B		N33-3006-41	OVAL HEAD SCREW (CASE)	
J	2A,2F		N87-2606-46	BRAZIER HEAD SCREW (UNIT,RL)	
K	1A,1H		N87-3006-46	BRAZIER HEAD SCREW (AT,FAN)	
L	2G,2H		N87-3008-46	BRAZIER HEAD SCREW	
M	2B,1G		N88-2608-46	FLAT HEAD SCREW (FINAL)	
N	2D		N90-3008-46	TP HEAD MACHIN SCREW (PANEL)	
P	3A,3B		N91-3010-46	TP HEAD TAPPING SCREW (FOOT)	
SP	1A		T07-0252-15	LOUDSPEAKER (8 ohm 1W)	
MIC	1N		T91-0352-15	MICROPHONE ACSY	
93	1E		W02-1836-05	ENCODER	
BATT	2A	*	W09-0873-05	LITHIUM CELL (3V 220MAh)	

RF UNIT (X44-3210-00)

Ref. No.	Address	New parts	Parts No.	Description	Destination
C1			CK73FB1H103K	CHIP C 0.010UF K	
C2			CC73FCH1H121J	CHIP C 120PF J	
C3			CK73FF1C105Z	CHIP C 1.0UF Z	
C4,5			CK73FB1H103K	CHIP C 0.010UF K	
C6			CK73FB1E103K	CHIP C 0.010UF K	
C7			CK73FB1H103K	CHIP C 0.010UF K	
C8			CK73FB1H102K	CHIP C 1000PF K	
C10			CK73FB1H103K	CHIP C 0.010UF K	
C14			CK73FB1E103K	CHIP C 0.010UF K	
C15			CK73FF1C105Z	CHIP C 1.0UF Z	
C16			CK73FF1E104Z	CHIP C 0.10UF Z	
C17			CK73FF1C105Z	CHIP C 1.0UF Z	
C18			CK73FB1E103K	CHIP C 0.010UF K	
C19			CK73FB1H182K	CHIP C 1800PF K	
C21			CK73FB1H682K	CHIP C 6800PF K	
C22			CK73FB1H182K	CHIP C 1800PF K	
C23			CK73FF1E104Z	CHIP C 0.10UF Z	
C27			CK73FF1E104Z	CHIP C 0.10UF Z	
C28			CE04EW1C100M	ELECTRO 10UF 16WV	
C29-31			CK73FF1E104Z	CHIP C 0.10UF Z	
C32			CE04EW1C100M	ELECTRO 10UF 16WV	
C33			CK73FF1C105Z	CHIP C 1.0UF Z	
C34			CK73FF1E104Z	CHIP C 0.10UF Z	
C35			CC73FCH1H050C	CHIP C 5.0PF C	
C36			CK73FB1H103K	CHIP C 0.010UF K	
C39,40			CK73FB1E103K	CHIP C 0.010UF K	
C47			CK73FB1H103K	CHIP C 0.010UF K	
C48			CK73FB1H223K	CHIP C 0.022UF K	
C49			CK73FB1H103K	CHIP C 0.010UF K	
C50			CK73FF1E104Z	CHIP C 0.10UF Z	
C51			CK73FF1C105Z	CHIP C 1.0UF Z	
C52			CK73FB1H222K	CHIP C 2200PF K	
C53			CK73FB1H682K	CHIP C 6800PF K	
C54			CK73FB1H222K	CHIP C 2200PF K	
C55			CK73FF1E104Z	CHIP C 0.10UF Z	
C56			CK73FF1C105Z	CHIP C 1.0UF Z	
C57			CK73FB1H472K	CHIP C 4700PF K	
C58			CK73FF1E104Z	CHIP C 0.10UF Z	
C59			CK73FF1C105Z	CHIP C 1.0UF Z	
C60			CC73FSL1H821J	CHIP C 820PF J	
C61			CK73FF1C105Z	CHIP C 1.0UF Z	
C62			CK73FB1H472K	CHIP C 4700PF K	
C63			CK73FF1E104Z	CHIP C 0.10UF Z	
C64			CK73FB1H222K	CHIP C 2200PF K	
C65			CK73FF1E104Z	CHIP C 0.10UF Z	
C66			CK73FF1C105Z	CHIP C 1.0UF Z	
C67			CK73FB1H561K	CHIP C 560PF K	
C68			CK73FF1C105Z	CHIP C 1.0UF Z	
C69			CK73FB1H222K	CHIP C 2200PF K	
C70			CK73FF1E104Z	CHIP C 0.10UF Z	
C71			CK73FB1H102K	CHIP C 1000PF K	
C72			CK73FF1E104Z	CHIP C 0.10UF Z	
C73			CK73FF1C105Z	CHIP C 1.0UF Z	
C74			CC73FSL1H271J	CHIP C 270PF J	
C75			CK73FF1C105Z	CHIP C 1.0UF Z	
C76			CK73FB1H102K	CHIP C 1000PF K	
C77,78			CK73FF1E104Z	CHIP C 0.10UF Z	
C80			CK73FF1C105Z	CHIP C 1.0UF Z	
C81			CC73FCH1H050C	CHIP C 5.0PF C	
C83			CC73FCH1H050C	CHIP C 5.0PF C	
C85			CC73FCH1H050C	CHIP C 5.0PF C	
C87			CK73FF1C105Z	CHIP C 1.0UF Z	
C88			CK73FF1E104Z	CHIP C 0.10UF Z	
C89			CK73FB1H102K	CHIP C 1000PF K	
C90			CK73FF1E104Z	CHIP C 0.10UF Z	
C91			CK73FF1C105Z	CHIP C 1.0UF Z	
C92			CC73FCH1H121J	CHIP C 120PF J	
C93			CK73FF1C105Z	CHIP C 1.0UF Z	
C94			CK73FB1H102K	CHIP C 1000PF K	
C95			CK73FF1E104Z	CHIP C 0.10UF Z	
C96			CK73FB1H102K	CHIP C 1000PF K	
C97			CK73FF1E104Z	CHIP C 0.10UF Z	
C98			CK73FF1C105Z	CHIP C 1.0UF Z	
C99			CC73FCH1H820J	CHIP C 82PF J	
C100			CK73FF1C105Z	CHIP C 1.0UF Z	
C101			CK73FB1H102K	CHIP C 1000PF K	
C102,103			CK73FF1E104Z	CHIP C 0.10UF Z	
C105			CK73FF1C105Z	CHIP C 1.0UF Z	
C106			CC73FCH1H040C	CHIP C 4.0PF C	
C108			CC73FCH1H040C	CHIP C 4.0PF C	
C110			CK73FF1C105Z	CHIP C 1.0UF Z	

PARTS LIST

RF UNIT (X44-3210-00)

Ref. No.	Address	New parts	Parts No.	Description			Destination
C111			CK73FF1E104Z	CHIP C	0.10UF	Z	
C112			CC73FSL1H391J	CHIP C	390PF	J	
C113			CK73FF1E104Z	CHIP C	0.10UF	Z	
C114			CK73FF1C105Z	CHIP C	1.0UF	Z	
C115			CC73FCH1H680J	CHIP C	68PF	J	
C116			CK73FF1C105Z	CHIP C	1.0UF	Z	
C117			CC73FSL1H151J	CHIP C	150PF	J	
C118,119			CK73FF1E104Z	CHIP C	0.10UF	Z	
C121			CK73FF1C105Z	CHIP C	1.0UF	Z	
C122			CC73FCH1H050C	CHIP C	5.0PF	C	
C124			CC73FCH1H050C	CHIP C	5.0PF	C	
C126			CK73FF1C105Z	CHIP C	1.0UF	Z	
C127			CK73FF1E104Z	CHIP C	0.10UF	Z	
C128			CC73FCH1H221J	CHIP C	220PF	J	
C129			CK73FF1E104Z	CHIP C	0.10UF	Z	
C130			CK73FF1C105Z	CHIP C	1.0UF	Z	
C131			CC73FCH1H330J	CHIP C	33PF	J	
C132			CK73FF1C105Z	CHIP C	1.0UF	Z	
C133			CK73FF1E104Z	CHIP C	0.10UF	Z	
C134			CK73FB1H103K	CHIP C	0.010UF	K	
C135			CC73FCH1H121J	CHIP C	120PF	J	
C136			CK73FF1E104Z	CHIP C	0.10UF	Z	
C137			CC73FSL1H221J	CHIP C	220PF	J	
C138			CK73FB1E103K	CHIP C	0.010UF	K	
C139			CK73FF1E104Z	CHIP C	0.10UF	Z	
C140,141			CK73FB1E103K	CHIP C	0.010UF	K	
C142			CK73FF1E104Z	CHIP C	0.10UF	Z	
C143			CC73FCH1H390J	CHIP C	39PF	J	
C144,145			CK73FB1E103K	CHIP C	0.010UF	K	
C146,147			CK73FF1E104Z	CHIP C	0.10UF	Z	
C148			CK73FB1E103K	CHIP C	0.010UF	K	
C149			CK73FF1E104Z	CHIP C	0.10UF	Z	
C150,151			CK73FF1C105Z	CHIP C	1.0UF	Z	
C152,153			CK73FF1E104Z	CHIP C	0.10UF	Z	
C154			CC73FCH1H101J	CHIP C	100PF	J	
C155			CC73FCH1H150J	CHIP C	15PF	J	
C156			CK73FB1E103K	CHIP C	0.010UF	K	
C157			CC73FSL1H221J	CHIP C	220PF	J	
C158			CK73FB1H471K	CHIP C	470PF	K	
C159			CK73FB1H102K	CHIP C	1000PF	K	
C160			CC73FCH1H470J	CHIP C	47PF	J	
C161			CC73FCH1H820J	CHIP C	82PF	J	
C162			CK73FF1E104Z	CHIP C	0.10UF	Z	
C163			CK73FB1E103K	CHIP C	0.010UF	K	
C164			CC73FSL1H471J	CHIP C	470PF	J	
C165			CK73FB1E103K	CHIP C	0.010UF	K	
C166,167			CK73FF1E104Z	CHIP C	0.10UF	Z	
C168			CK73FB1E103K	CHIP C	0.010UF	K	
C169			CC73FCH1H680J	CHIP C	68PF	J	
C170			CK73FF1E104Z	CHIP C	0.10UF	Z	
C171			CC73FCH1H470J	CHIP C	47PF	J	
C172,173			CK73FB1E103K	CHIP C	0.010UF	K	
C174			CC73FSL1H471J	CHIP C	470PF	J	
C175			CC73FCH1H470J	CHIP C	47PF	J	
C176			CE04EW1C470M	ELECTRO	47UF	16WV	
C177			CC73FCH1H050C	CHIP C	5.0PF	C	
C178			CC73FCH1H680J	CHIP C	68PF	J	
C179			CK73FF1E104Z	CHIP C	0.10UF	Z	
C180			CC73FCH1H020C	CHIP C	2.0PF	C	

Ref. No.	Address	New parts	Parts No.	Description			Destination
C181			CC73FCH1H050C	CHIP C	5.0PF	C	
C182			CK73FB1E103K	CHIP C	0.010UF	K	
C184			CC73FCH1H050C	CHIP C	5.0PF	C	
C185			CC73FCH1H220J	CHIP C	22PF	J	
C186			CC73FCH1H050C	CHIP C	5.0PF	C	
C187			CC73FCH1H1R5C	CHIP C	1.5PF	C	
C188			CC73FCH1H220J	CHIP C	22PF	J	
C189			CC73FCH1H0R5C	CHIP C	0.5PF	C	
C190			CK73FB1E103K	CHIP C	0.010UF	K	
C191			CC73FSL1H681J	CHIP C	680PF	J	
C192,193			CK73FB1H102K	CHIP C	1000PF	K	
C194			CC73FSL1H331J	CHIP C	330PF	J	
C195			CC73FSL1H471J	CHIP C	470PF	J	
C196			CK73FB1H102K	CHIP C	1000PF	K	
C197			CK73FB1E103K	CHIP C	0.010UF	K	
C198			CC73FCH1H020C	CHIP C	2.0PF	C	
C199			CK73FB1E103K	CHIP C	0.010UF	K	
C201-206			CK73FB1E103K	CHIP C	0.010UF	K	
C207			CC73FCH1H470J	CHIP C	47PF	J	
C208			CK73FF1E104Z	CHIP C	0.10UF	Z	
C209			CK73FB1H102K	CHIP C	1000PF	K	
C211,212			CK73FF1E104Z	CHIP C	0.10UF	Z	
C214			CK73FB1E103K	CHIP C	0.010UF	K	
C215			CK73FF1E104Z	CHIP C	0.10UF	Z	
C216			CE04EW1C100M	ELECTRO	10UF	16WV	
C217			CK73FF1E104Z	CHIP C	0.10UF	Z	
C218			CC73FCH1H470J	CHIP C	47PF	J	
C219			CK73FF1E104Z	CHIP C	0.10UF	Z	
C220			CE04EW1H010M	ELECTRO	1.0UF	50WV	
C221-223			CK73FF1E104Z	CHIP C	0.10UF	Z	
C224			CK73FB1E103K	CHIP C	0.010UF	K	
C225			CK73FB1H102K	CHIP C	1000PF	K	
C226-228			CK73FB1E103K	CHIP C	0.010UF	K	
C229			CC73FCH1H050C	CHIP C	5.0PF	C	
C230			CK73FB1E103K	CHIP C	0.010UF	K	
C231			CC73FCH1H220J	CHIP C	22PF	J	
C232			CK73FF1E104Z	CHIP C	0.10UF	Z	
C233			CK73FB1H102K	CHIP C	1000PF	K	
C234			CK73FF1E104Z	CHIP C	0.10UF	Z	
C236			CK73FB1E103K	CHIP C	0.010UF	K	
C237			CC73FCH1H220J	CHIP C	22PF	J	
C238			CK73FB1E103K	CHIP C	0.010UF	K	
C239			CK73FB1H471K	CHIP C	470PF	K	
C240,241			CK73FB1E103K	CHIP C	0.010UF	K	
C242			CC73FSL1H471J	CHIP C	470PF	J	
C243,244			CK73FB1E103K	CHIP C	0.010UF	K	
C245			CC73FSL1H471J	CHIP C	470PF	J	
C246			CC73FCH1H010C	CHIP C	1.0PF	C	
C247			CC73FSL1H471J	CHIP C	470PF	J	
C248			CK73FB1E103K	CHIP C	0.010UF	K	
C249			CC73FCH1H0R5C	CHIP C	0.5PF	C	
C250			CC73FCH1H010C	CHIP C	1.0PF	C	
C251-253			CK73FB1E103K	CHIP C	0.010UF	K	
C254			CK73FF1E104Z	CHIP C	0.10UF	Z	
C256,257			CK73FB1E103K	CHIP C	0.010UF	K	
C260			CK73FB1E103K	CHIP C	0.010UF	K	
C262,263			CK73FB1E103K	CHIP C	0.010UF	K	
C265-273			CK73FB1E103K	CHIP C	0.010UF	K	
C274			CC73FCH1H180J	CHIP C	18PF	J	

PARTS LSIT

RF UNIT (X44-3210-00)

Ref. No.	Address	New parts	Parts No.	Description			Destination
C275			CC73FCH1H150J	CHIP C	15PF	J	
C276			CC73FCH1H180J	CHIP C	18PF	J	
C277-279			CK73FB1E103K	CHIP C	0.010UF	K	
C280			CC73FCH1H101J	CHIP C	100PF	J	
C281,282			CC73FCH1H220J	CHIP C	22PF	J	
C283			CC73FCH1H330J	CHIP C	33PF	J	
C285			CK73FB1E223K	CHIP C	0.022UF	K	
C286			CE04EW1H010M	ELECTRO	1.0UF	50WV	
C287			CE04EW1C100M	ELECTRO	10UF	16WV	
C288			CK73FB1H473K	CHIP C	0.047UF	K	
C289			CE04EW1C100M	ELECTRO	10UF	16WV	
C290			CK73FB1E103K	CHIP C	0.010UF	K	
C291			CE04EW1HR47M	ELECTRO	0.47UF	50WV	
C292			CK73FB1E103K	CHIP C	0.010UF	K	
C293			CC73FCH1H101J	CHIP C	100PF	J	
C294			CK73FF1E104Z	CHIP C	0.10UF	Z	
C295-298			CK73FB1E103K	CHIP C	0.010UF	K	
C299,300			CK73FB1H103K	CHIP C	0.010UF	K	
C301			CK73FB1H102K	CHIP C	1000PF	K	
C302			CK73FB1H103K	CHIP C	0.010UF	K	
C303			CK73FB1H102K	CHIP C	1000PF	K	
C304			CK45FE2H222P	CERAMIC	2200PF	P	
C305			CK73FB1H103K	CHIP C	0.010UF	K	
C306,307			CK73FB1H102K	CHIP C	1000PF	K	
C308			CK73FB1H103K	CHIP C	0.010UF	K	
C310			CK73FB1H103K	CHIP C	0.010UF	K	
C312			CE04EW1C100M	ELECTRO	10UF	16WV	
C313,314			CK73FB1H103K	CHIP C	0.010UF	K	
C315			CE04EW1C100M	ELECTRO	10UF	16WV	
C316-327			CK73FB1H102K	CHIP C	1000PF	K	
C328-331			CK73FB1E103K	CHIP C	0.010UF	K	
C332			CK73FB1H102K	CHIP C	1000PF	K	
C333			CK73FB1E103K	CHIP C	0.010UF	K	
C334			CC73FCH1H330J	CHIP C	33PF	J	
C335			CK73FB1E103K	CHIP C	0.010UF	K	
C338			CC73FSL1H221J	CHIP C	220PF	J	
C339,340			CC73FCH1H220J	CHIP C	22PF	J	
C341-346			CK73FB1E103K	CHIP C	0.010UF	K	
C347,348			CC73FCH1H100D	CHIP C	10PF	D	
C350			C92-0004-05	CHIP-TAN	1.0UF	16WV	
C500			CK73FB1E103K	CHIP C	0.010UF	K	
C501			CE04NW1C100M	ELECTRO	10UF	16WV	
C502			CK73FB1E103K	CHIP C	0.010UF	K	
C503			CE04NW1C100M	ELECTRO	10UF	16WV	
C504			CK73FB1E103K	CHIP C	0.010UF	K	
C505			CE04EW1C100M	ELECTRO	10UF	16WV	
C506			CK73FB1E103K	CHIP C	0.010UF	K	
C507			CE04NW1C100M	ELECTRO	10UF	16WV	
C508			CK73FB1E103K	CHIP C	0.010UF	K	
C509			CE04NW1C100M	ELECTRO	10UF	16WV	
C510			CK73FB1E103K	CHIP C	0.010UF	K	
C511			CE04EW1C100M	ELECTRO	10UF	16WV	
C512,513			CK73FB1E103K	CHIP C	0.010UF	K	
C514			C92-0516-05	CHIP-TAN	4.7UF	16WV	
C515			CC73FSL1H271J	CHIP C	270PF	J	
C516			CC73FSL1H561J	CHIP C	560PF	J	
C517			CK73FB1E103K	CHIP C	0.010UF	K	
C518			CC73FSL1H271J	CHIP C	270PF	J	
C519,520			CK73FB1E103K	CHIP C	0.010UF	K	

Ref. No.	Address	New parts	Parts No.	Description			Destination
C521			CE04EW1C100M	ELECTRO	10UF	16WV	
C522			CK73FB1E103K	CHIP C	0.010UF	K	
C523			CC73FCH1H121J	CHIP C	120PF	J	
C524			CC73FSL1H181J	CHIP C	180PF	J	
C525			CC73FCH1H121J	CHIP C	120PF	J	
C526-530			CK73FB1E103K	CHIP C	0.010UF	K	
C531			CC73FCH1H560J	CHIP C	56PF	J	
C532			CC73FSL1H391J	CHIP C	390PF	J	
C533			CC73FCH1H390J	CHIP C	39PF	J	
C534			CC73FCH1H680J	CHIP C	68PF	J	
C535			CC73FCH1H390J	CHIP C	39PF	J	
C536			CC73FCH1H101J	CHIP C	100PF	J	
C537			CC73FCH1H680J	CHIP C	68PF	J	
C538			CC73FCH1H390J	CHIP C	39PF	J	
C539			CC73FCH1H070D	CHIP C	7.0PF	D	
C540			CC73FCH1H680J	CHIP C	68PF	J	
C541			CC73FCH1H220J	CHIP C	22PF	J	
C542			CC73FCH1H330J	CHIP C	33PF	J	
C543-545			CK73FB1E103K	CHIP C	0.010UF	K	
C546			CC73FCH1H121J	CHIP C	120PF	J	
C547			CE04EW1C470M	ELECTRO	47UF	16WV	
C548-555			CK73FB1E103K	CHIP C	0.010UF	K	
C556			CK73FB1H102K	CHIP C	1000PF	K	
C557			CC73FCH1H330J	CHIP C	33PF	J	
C558			CC73FCH1H0R5C	CHIP C	0.5PF	C	
C560			CC73FCH1H0R5C	CHIP C	0.5PF	C	
C561			CC73FCH1H330J	CHIP C	33PF	J	
C562-564			CK73FB1E103K	CHIP C	0.010UF	K	
C565			C92-0516-05	CHIP-TAN	4.7UF	16WV	
C566,567			CC73FCH1H470J	CHIP C	47PF	J	
C568			CC73FCH1H101J	CHIP C	100PF	J	
C569			CE04EW1C100M	ELECTRO	10UF	16WV	
C570,571			CK73FB1E103K	CHIP C	0.010UF	K	
C572			CC73FCH1H100D	CHIP C	10PF	D	
C573			CC73FCH1H050C	CHIP C	5.0PF	C	
C574-576			CK73FB1E103K	CHIP C	0.010UF	K	
C577			CK73FB1H331K	CHIP C	330PF	K	
C578			CC73FCH1H620J	CHIP C	62PF	J	
C579			CK73FB1H331K	CHIP C	330PF	K	
C581			CC73FCH1H820J	CHIP C	82PF	J	
C583			CK73FB1H103K	CHIP C	0.010UF	K	
C584			CE04EW1C100M	ELECTRO	10UF	16WV	
C585			CK73FB1H103K	CHIP C	0.010UF	K	
C586			CK73FB1H682K	CHIP C	6800PF	K	
C587			CK73FB1H123K	CHIP C	0.012UF	K	
C588			CK73FB1H682K	CHIP C	6800PF	K	
C591			CK73FB1H103K	CHIP C	0.010UF	K	
C593			CK73FB1H102K	CHIP C	1000PF	K	
C594			CC73FSL1H221J	CHIP C	220PF	J	
C595			CK73FB1H103K	CHIP C	0.010UF	K	
C596			CC73FCH1H0R5C	CHIP C	0.5PF	C	
C597			CC73FCH1H270J	CHIP C	27PF	J	
C598-602			CK73FB1H103K	CHIP C	0.010UF	K	
C603			CK73FB1H102K	CHIP C	1000PF	K	
C604			CK73FB1H103K	CHIP C	0.010UF	K	
C606			CC73FCH1H270J	CHIP C	27PF	J	
C618			CE04EW1C101M	ELECTRO	100UF	16WV	
C619			C92-0001-05	CHIP-TAN	0.10UF	35WV	
C620-623			CK73FB1H102K	CHIP C	1000PF	K	

PARTS LIST

RF UNIT (X44-3210-00)

Ref. No.	Address	New parts	Parts No.	Description			Destination
C624			CK73FB1E103K	CHIP C	0.010UF	K	
C625-628			CK73FB1H102K	CHIP C	1000PF	K	
C629			CE04EW1C101M	ELECTRO	100UF	16WV	
C630,631			CK73FB1E103K	CHIP C	0.010UF	K	
C630,631			CK73FB1E103K	CHIP C	0.010UF	K	
C632			CE04EW1C101M	ELECTRO	100UF	16WV	
C633			CC73FCH1H101J	CHIP C	100PF	J	
C634			CC73FCH1H180J	CHIP C	18PF	J	
C635			CK73FB1H102K	CHIP C	1000PF	K	
C636			CC73FCH1H330J	CHIP C	33PF	J	
C637			CC73FCH1H080D	CHIP C	8.0PF	D	
C638			CC73FCH1H120J	CHIP C	12PF	J	
C639			CC73FCH1H560J	CHIP C	56PF	J	
C640			CK73FB1H183K	CHIP C	0.018UF	K	
C641			CC73FCH1H120J	CHIP C	12PF	J	
C642			CK73FB1H102K	CHIP C	1000PF	K	
C643			CC73FCH1H330J	CHIP C	33PF	J	
C644			CC73FCH1H120J	CHIP C	12PF	J	
C645			CC73FCH1H150J	CHIP C	15PF	J	
C646			CC73FCH1H390J	CHIP C	39PF	J	
C647			CC73FCH1H100D	CHIP C	10PF	D	
C648			CK73FB1H102K	CHIP C	1000PF	K	
C649			CC73FCH1H160J	CHIP C	16PF	J	
C650			CC73FCH1H240J	CHIP C	24PF	J	
C651			CC73FCH1H150J	CHIP C	15PF	J	
C652			CC73FCH1H390J	CHIP C	39PF	J	
C653			CK73FB1H183K	CHIP C	0.018UF	K	
C654			CC73FCH1H040C	CHIP C	4.0PF	C	
C655			CK73FB1H102K	CHIP C	1000PF	K	
C656			CC73FCH1H150J	CHIP C	15PF	J	
C657			CC73FCH1H200J	CHIP C	20PF	J	
C658			CC73FCH1H160J	CHIP C	16PF	J	
C659,660			CK73FB1H102K	CHIP C	1000PF	K	
C661			CC73FCH1H100D	CHIP C	10PF	D	
C662			CC73FCH1H030C	CHIP C	3.0PF	C	
C663			CC73FCH1H020C	CHIP C	2.0PF	C	
C664			CC73FCH1H040C	CHIP C	4.0PF	C	
C665,666			CK73FB1H102K	CHIP C	1000PF	K	
C667			CK73FB1E103K	CHIP C	0.010UF	K	
C668			CK73FB1H102K	CHIP C	1000PF	K	
C669			CK73FB1E103K	CHIP C	0.010UF	K	
C670			CK73FB1H102K	CHIP C	1000PF	K	
C671			CC73FCH1H240J	CHIP C	24PF	J	
C672			CK73FB1H102K	CHIP C	1000PF	K	
C673			CC73FCH1H010C	CHIP C	1.0PF	C	
C674			CC73FCH1H240J	CHIP C	24PF	J	
C675			CK73FB1E103K	CHIP C	0.010UF	K	
C676			C92-0004-05	CHIP-TAN	1.0UF	16WV	
C677			CE04EW1C221M	ELECTRO	220UF	16WV	
C678			CK73FB1E103K	CHIP C	0.010UF	K	
C679			CQ92M1H822K	MYLAR	8200PF	K	
C680			C91-1083-05	FILM	0.47UF	63WV	
C681			CK73FB1H102K	CHIP C	1000PF	K	
C682,683			CK73FB1E103K	CHIP C	0.010UF	K	
C684			CK73FB1H103K	CHIP C	0.010UF	K	
C685,686			CK73FB1E103K	CHIP C	0.010UF	K	
C687			CC73FCH1H020C	CHIP C	2.0PF	C	
C688			CC73FCH1H1R5C	CHIP C	1.5PF	C	
C689			CC73FCH1H030C	CHIP C	3.0PF	C	

Ref. No.	Address	New parts	Parts No.	Description			Destination
C690			CC73FCH1H470J	CHIP C	47PF	J	
C691			CC73FCH1H270J	CHIP C	27PF	J	
C692-696			CK73FB1E103K	CHIP C	0.010UF	K	
C697			CE04EW1C100M	ELECTRO	10UF	16WV	
C698			CK73FB1H102K	CHIP C	1000PF	K	
C699			CK73FB1E103K	CHIP C	0.010UF	K	
C700			CK73FB1H102K	CHIP C	1000PF	K	
C701			CC73FCH1H330J	CHIP C	33PF	J	
C702			CC73FCH1H100D	CHIP C	10PF	D	
C703			CC73FCH1H680J	CHIP C	68PF	J	
C704,705			CK73FB1H103K	CHIP C	0.010UF	K	
C706			CE04EW1C470M	ELECTRO	47UF	16WV	
C707			CK73FB1H103K	CHIP C	0.010UF	K	
C708			CE04EW1C101M	ELECTRO	100UF	16WV	
C710			CK73FB1H102K	CHIP C	1000PF	K	
C711			CQ92M1H333K	MYLAR	0.033UF	K	
C712			C91-1083-05	FILM	0.47UF	63WV	
C713			CK73FB1H103K	CHIP C	0.010UF	K	
C714			C92-0516-05	CHIP-TAN	4.7UF	16WV	
C715,716			CK73FB1H102K	CHIP C	1000PF	K	
C717			CE04EW1C101M	ELECTRO	100UF	16WV	
C719			CC73FCH1H020C	CHIP C	2.0PF	C	
C721-726			CC73FCH1H270J	CHIP C	27PF	J	
C727,728			CC73FCH1H100D	CHIP C	10PF	D	
C729			CC73FCH1H020C	CHIP C	2.0PF	C	
C730-732			CK73FB1H102K	CHIP C	1000PF	K	
C744			CK73FB1H102K	CHIP C	1000PF	K	
C750-757			CC73FCH1H101J	CHIP C	100PF	J	
C758-761			CK73FB1H102K	CHIP C	1000PF	K	
C762			CC73FCH1H101J	CHIP C	100PF	J	
C770			CE04EW1C470M	ELECTRO	47UF	16WV	
C771			CK73FB1H103K	CHIP C	0.010UF	K	
C780			CE04EW1E470M	ELECTRO	47UF	25WV	
C781,782			CK73FF1E104Z	CHIP C	0.10UF	Z	
C783			CE04EW1C470M	ELECTRO	47UF	16WV	
C784			CE04EW1E470M	ELECTRO	47UF	25WV	
C785,786			CK73FF1E104Z	CHIP C	0.10UF	Z	
C787			CE04EW1C470M	ELECTRO	47UF	16WV	
C800			CC73FCH1H390J	CHIP C	39PF	J	
C801			CC73FCH1H151J	CHIP C	150PF	J	
C802			CC73FCH1H390J	CHIP C	39PF	J	
C803			CC73FCH1H050C	CHIP C	5.0PF	C	
C804			CK73FB1H103K	CHIP C	0.010UF	K	
C805			CC73FCH1H020C	CHIP C	2.0PF	C	
C806,807			CK73FB1H103K	CHIP C	0.010UF	K	
C808			C92-0004-05	CHIP-TAN	1.0UF	16WV	
C907-912			CK73FB1H102K	CHIP C	1000PF	K	
C914-926			CK73FB1H102K	CHIP C	1000PF	K	
TC506,507			C05-0377-05	TRIMMER CAPACITOR		10PF	
TC508,509			C05-0376-05	TRIMMER CAPACITOR		6PF	
TC800			C05-0344-05	TRIMMER CAPACITOR		30PF	
CN2			E04-0154-05	RF COAXIAL CABLE SOCKET			
CN4			E04-0154-05	RF COAXIAL CABLE SOCKET			
CN5,6			E04-0191-05	RF COAXIAL CABLE SOCKET			
CN7			E40-3238-05	PIN CONNECTOR (3P)			
CN10			E04-0154-05	RF COAXIAL CABLE SOCKET			
CN13		*	E40-5741-05	PIN CONNECTOR (8P)			
CN14		*	E40-5740-05	PIN CONNECTOR (20P)			

PARTS LSIT

RF UNIT (X44-3210-00)

Ref. No.	Address	New parts	Parts No.	Description	Destination
CN15-17			E04-0154-05	RF COAXIAL CABLE SOCKET	
CN500		*	E40-5740-05	PIN CONNECTOR (20P)	
CN501			E40-3237-05	PIN CONNECTOR (2P)	
CN502-505			E04-0154-05	RF COAXIAL CABLE SOCKET (2P)	
CN506			E40-3238-05	PIN CONNECTOR (3P)	
CN508			E40-5606-05	PIN CONNECTOR (3P)	
CN509			E40-5607-05	PIN CONNECTOR (4P)	
CN510			E23-0996-05	TERMINAL (TEST)	
CN800			E40-4463-05	PIN CONNECTOR	
CN801			E40-4464-05	PIN CONNECTOR	
CN901			E40-3300-05	PIN CONNECTOR (3P)	
CN903-907		*	E40-5743-05	FLAT CABLE CONNECTOR (6P)	
J1			E06-0752-05	DIN SOCKET	
J2,3			E13-0166-05	PIN JACK	
J901		*	E11-0462-05	PHONE JACK	
W1		*	E37-0546-05	LEAD WIRE WITH CONNECTOR	
W2		*	E37-0517-05	LEAD WIRE WITH MINIPIN PLUG	
101	2F		F11-1141-04	SHIELDING COVER	
A502	2F		F11-1140-04	SHIELDING CASE	
–			J30-0545-05	SPACER (TO XF1)	
–			J30-0563-05	SPACER (TO XF3, X800)	
CF500,501			L72-0343-05	CERAMIC FILTER (8.4MHZ)	
L1		*	L39-1254-05	COIL	
L2			L19-0324-05	TROIDAL COIL	
L3			L40-1021-14	SMALL FIXED INDUCTOR	
L7			L40-2701-14	SMALL FIXED INDUCTOR	
L8			L40-4791-14	SMALL FIXED INDUCTOR	
L9			L40-2701-14	SMALL FIXED INDUCTOR	
L10			L40-1015-48	SMALL FIXED INDUCTOR (100UH)	
L11			L19-0324-05	TROIDAL COIL	
L12			L40-1005-48	SMALL FIXED INDUCTOR (10UH)	
L13			L40-4705-48	SMALL FIXED INDUCTOR (47UH)	
L14,15			L40-1501-14	SMALL FIXED INDUCTOR	
L16			L40-1021-14	SMALL FIXED INDUCTOR	
L17,18			L40-5691-14	SMALL FIXED INDUCTOR	
L19			L40-1292-14	SMALL FIXED INDUCTOR	
L20			L40-8291-14	SMALL FIXED INDUCTOR	
L21,22			L40-1292-14	SMALL FIXED INDUCTOR	
L23			L40-5691-14	SMALL FIXED INDUCTOR	
L24			L40-1292-14	SMALL FIXED INDUCTOR	
L25			L40-1092-14	SMALL FIXED INDUCTOR	
L26			L40-3391-14	SMALL FIXED INDUCTOR	
L27			L40-1092-14	SMALL FIXED INDUCTOR	
L28-31			L34-4262-05	COIL	
L32			L40-3382-14	SMALL FIXED INDUCTOR	
L33			L40-2792-14	SMALL FIXED INDUCTOR	
L34			L40-3382-14	SMALL FIXED INDUCTOR	
L35			L40-2282-14	SMALL FIXED INDUCTOR	
L36			L40-2292-14	SMALL FIXED INDUCTOR	
L37			L40-2282-14	SMALL FIXED INDUCTOR	
L38-40			L34-4289-05	COIL	
L41			L40-2282-14	SMALL FIXED INDUCTOR	
L42			L40-1292-14	SMALL FIXED INDUCTOR	
L43			L40-2282-14	SMALL FIXED INDUCTOR	
L44-46		*	L34-4392-05	COIL	
L47			L40-2282-14	SMALL FIXED INDUCTOR	
L48			L40-1292-14	SMALL FIXED INDUCTOR	

Ref. No.	Address	New parts	Parts No.	Description	Destination
L49			L40-2282-14	SMALL FIXED INDUCTOR	
L50			L34-4264-05	COIL	
L51			L40-1021-14	SMALL FIXED INDUCTOR	
L52			L34-4265-05	COIL	
L53			L19-0324-05	TROIDAL COIL	
L54			L40-4785-48	SMALL FIXED INDUCTOR (470NH)	
L55			L19-0324-05	TROIDAL COIL	
L56			L40-4705-48	SMALL FIXED INDUCTOR (47UH)	
L57			L40-2785-48	SMALL FIXED INDUCTOR (270NH)	
L58			L40-2285-48	SMALL FIXED INDUCTOR (220NH)	
L59			L19-0324-05	TROIDAL COIL	
L60			L39-1255-05	COIL	
L61			L40-1285-48	SMALL FIXED INDUCTOR (120NH)	
L62			L39-1255-05	COIL	
L63			L40-1015-48	SMALL FIXED INDUCTOR (100NH)	
L64			L39-1255-05	COIL	
L65			L34-4222-05	COIL	
L67		*	L34-4394-05	COIL	
L68			L40-1015-48	SMALL FIXED INDUCTOR (100UH)	
L69			L40-2285-48	SMALL FIXED INDUCTOR (220NH)	
L70		*	L34-4393-05	COIL	
L71			L40-3395-48	SMALL FIXED INDUCTOR (3.3UH)	
L72		*	L34-4394-05	COIL	
L73			L40-2295-48	SMALL FIXED INDUCTOR (2.2UH)	
L74			L40-2285-48	SMALL FIXED INDUCTOR (220NH)	
L75			L34-4209-05	COIL	
L76			L40-3395-48	SMALL FIXED INDUCTOR (3.3UH)	
L77			L34-0943-05	COIL	
L78			L40-4785-48	SMALL FIXED INDUCTOR (470NH)	
L79			L40-3395-48	SMALL FIXED INDUCTOR (3.3UH)	
L81			L34-0535-05	COIL	
L82			L34-0536-05	COIL	
L83,84			L40-1015-48	SMALL FIXED INDUCTOR (100UH)	
L86			L40-2285-48	SMALL FIXED INDUCTOR (220NH)	
L87			L40-4705-48	SMALL FIXED INDUCTOR (47UH)	
L88			L19-0324-05	TROIDAL COIL	
L89		*	L34-4395-05	COIL	
L90			L39-1255-05	COIL	
L91		*	L34-4395-05	COIL	
L92			L34-4211-05	COIL	
L93			L40-1015-48	SMALL FIXED INDUCTOR (100UH)	
L94		*	L34-4395-05	COIL	
L95			L34-4207-05	COIL	
L98			L34-0943-05	COIL	
L99			L34-0781-05	COIL	
L100			L34-0536-05	COIL	
L101			L40-4705-48	SMALL FIXED INDUCTOR (47UH)	
L102			L40-3395-48	SMALL FIXED INDUCTOR (3.3UH)	
L107			L40-1015-48	SMALL FIXED INDUCTOR (100UH)	
L108			L40-1005-48	SMALL FIXED INDUCTOR (10UH)	
L110,111		*	L40-1805-48	SMALL FIXED INDUCTOR (18UH)	
L112,113		*	L40-1081-42	SMALL FIXED INDUCTOR (0.1UH)	
L301		*	L40-1001-42	SMALL FIXED INDUCTOR (10UH)	
L304-310		*	L40-1001-42	SMALL FIXED INDUCTOR (10UH)	
L314-318		*	L40-1001-42	SMALL FIXED INDUCTOR (10UH)	
L500-505			L40-1005-48	SMALL FIXED INDUCTOR (10UH)	
L506,507		*	L40-6805-48	SMALL FIXED INDUCTOR (68UH)	
L508			L40-1005-48	SMALL FIXED INDUCTOR (10UH)	
L509,510		*	L40-2705-48	SMALL FIXED INDUCTOR (27UH)	

PARTS LIST

RF UNIT (X44-3210-00)

Ref. No.	Address	New parts	Parts No.	Description	Destination
L511		*	L40-1805-48	SMALL FIXED INDUCTOR (18UH)	
L512,513		*	L40-2705-48	SMALL FIXED INDUCTOR (27UH)	
L514			L40-2205-48	SMALL FIXED INDUCTOR (22UH)	
L515		*	L40-1805-48	SMALL FIXED INDUCTOR (18UH)	
L516			L40-5695-48	SMALL FIXED INDUCTOR (5.6UH)	
L517			L40-1005-48	SMALL FIXED INDUCTOR (10UH)	
L518			L34-4222-05	COIL	
L519		*	L34-4421-05	COIL	
L520			L34-4222-05	COIL	
L521,522			L40-2285-48	SMALL FIXED INDUCTOR (220NH)	
L523			L40-1005-48	SMALL FIXED INDUCTOR (10UH)	
L524			L40-1095-48	SMALL FIXED INDUCTOR (1UH)	
L525,526			L40-2205-48	SMALL FIXED INDUCTOR (22UH)	
L528		*	L34-4396-05	COIL	
L529,530			L34-4222-05	COIL	
L531-534			L40-1015-48	SMALL FIXED INDUCTOR (100UH)	
L535			L33-0664-05	CHOKE COIL	
L536			L34-2354-05	COIL	
L537			L40-4795-48	SMALL FIXED INDUCTOR (4.7UH)	
L538			L33-0664-05	CHOKE COIL	
L539			L34-2354-05	COIL	
L540			L40-4795-48	SMALL FIXED INDUCTOR (4.7UH)	
L541			L33-0664-05	CHOKE COIL	
L542			L34-2354-05	COIL	
L543			L40-4795-48	SMALL FIXED INDUCTOR (4.7UH)	
L544			L33-0664-05	CHOKE COIL	
L545			L34-2354-05	COIL	
L546			L40-4795-48	SMALL FIXED INDUCTOR (4.7UH)	
L547			L40-3385-48	SMALL FIXED INDUCTOR (330NH)	
L548			L40-1295-48	SMALL FIXED INDUCTOR (1.2UH)	
L549			L40-3385-48	SMALL FIXED INDUCTOR (330NH)	
L550			L40-2285-48	SMALL FIXED INDUCTOR (220NH)	
L551			L40-1015-48	SMALL FIXED INDUCTOR (100NH)	
L552		*	L40-2795-48	SMALL FIXED INDUCTOR (2.7UH)	
L553			L40-1595-48	SMALL FIXED INDUCTOR (1.5UH)	
L554			L40-2295-48	SMALL FIXED INDUCTOR (2.2UH)	
L555			L40-3395-48	SMALL FIXED INDUCTOR (3.3UH)	
L556			L40-2285-48	SMALL FIXED INDUCTOR (220NH)	
L557-559			L40-1015-48	SMALL FIXED INDUCTOR (100UH)	
L580,581			L40-1005-48	SMALL FIXED INDUCTOR (10UH)	
L601			L40-3395-48	SMALL FIXED INDUCTOR (3.3UH)	
L603			L40-2785-48	SMALL FIXED INDUCTOR (270NH)	
L604			L40-1015-48	SMALL FIXED INDUCTOR (100UH)	
X800			L77-1521-15	CRYSTAL RESONATOR (20MHZ)	
XF1			L71-0401-05	CRYSTAL FILTER (73.05MHZ)	
XF2			L71-0235-05	CRYSTAL FILTER	
XF3			L71-0266-05	CRYSTAL FILTER (8830KHZ)	
Q	2F		N38-2640-46	PAN HEAD MACHINE SCREW	
CP500-505			R90-0721-05	MULTI-COMP 4.7K X 16	
R1			RD14BB2E470J	RD 47 J 1/4W	
R2			RD14BB2E151J	RD 150 J 1/4W	
R3			RK73FB2A101J	CHIP R 100 J 1/10W	
R5			RD14BB2E101J	RD 100 J 1/4W	
R7			RD14BB2E820J	RD 82 J 1/4W	
R9			RK73FB2A221J	CHIP R 220 J 1/10W	
R10			RK73FB2A181J	CHIP R 180 J 1/10W	
R11,12			RK73FB2A331J	CHIP R 330 J 1/10W	
R13			RK73FB2A470J	CHIP R 47 J 1/10W	

Ref. No.	Address	New parts	Parts No.	Description	Destination
R14			RK73FB2A222J	CHIP R 2.2K J 1/10W	
R18			RK73FB2A103J	CHIP R 10K J 1/10W	
R19			RK73FB2A330J	CHIP R 33 J 1/10W	
R20			RK73FB2A102J	CHIP R 1.0K J 1/10W	
R21,22			RK73FB2A330J	CHIP R 33 J 1/10W	
R23			RK73FB2A101J	CHIP R 100 J 1/10W	
R24			RK73FB2A222J	CHIP R 2.2K J 1/10W	
R25			RK73FB2A561J	CHIP R 560 J 1/10W	
R27			RK73FB2A181J	CHIP R 180 J 1/10W	
R28			RK73FB2A680J	CHIP R 68 J 1/10W	
R31			RK73FB2A103J	CHIP R 10K J 1/10W	
R44-55			RK73FB2A223J	CHIP R 22K J 1/10W	
R56			RK73FB2A121J	CHIP R 120 J 1/10W	
R58			RK73FB2A680J	CHIP R 68 J 1/10W	
R59,60			RK73FB2A560J	CHIP R 56 J 1/10W	
R61			RK73FB2A680J	CHIP R 68 J 1/10W	
R62			RK73FB2A220J	CHIP R 22 J 1/10W	
R63			RK73FB2A121J	CHIP R 120 J 1/10W	
R65			RK73FB2A220J	CHIP R 22 J 1/10W	
R66			RK73FB2A121J	CHIP R 120 J 1/10W	
R68			RK73FB2A220J	CHIP R 22 J 1/10W	
R69			RK73FB2A121J	CHIP R 120 J 1/10W	
R71			RK73FB2A220J	CHIP R 22 J 1/10W	
R72			RK73FB2A121J	CHIP R 120 J 1/10W	
R74			RK73FB2A220J	CHIP R 22 J 1/10W	
R75			RK73FB2A121J	CHIP R 120 J 1/10W	
R77			RK73FB2A220J	CHIP R 22 J 1/10W	
R78			RK73FB2A121J	CHIP R 120 J 1/10W	
R80			RK73FB2A220J	CHIP R 22 J 1/10W	
R81			RK73FB2A121J	CHIP R 120 J 1/10W	
R83			RK73FB2A220J	CHIP R 22 J 1/10W	
R84			RK73FB2A121J	CHIP R 120 J 1/10W	
R86			RK73FB2A220J	CHIP R 22 J 1/10W	
R87			RK73FB2A121J	CHIP R 120 J 1/10W	
R89			RK73FB2A220J	CHIP R 22 J 1/10W	
R90			RK73FB2A121J	CHIP R 120 J 1/10W	
R92			RK73FB2A151J	CHIP R 150 J 1/10W	
R93			RK73FB2A223J	CHIP R 22K J 1/10W	
R94			RK73FB2A104J	CHIP R 100K J 1/10W	
R95			RK73FB2A393J	CHIP R 39K J 1/10W	
R96,97			RK73FB2A330J	CHIP R 33 J 1/10W	
R98			RK73FB2A473J	CHIP R 47K J 1/10W	
R99			RK73FB2A151J	CHIP R 150 J 1/10W	
R100			RK73FB2A331J	CHIP R 330 J 1/10W	
R101			RK73FB2A221J	CHIP R 220 J 1/10W	
R102			RK73FB2A101J	CHIP R 100 J 1/10W	
R103			RK73FB2A473J	CHIP R 47K J 1/10W	
R104,105			RK73FB2A151J	CHIP R 150 J 1/10W	
R106			RK73FB2A152J	CHIP R 1.5K J 1/10W	
R107			RK73FB2A680J	CHIP R 68 J 1/10W	
R108			RK73FB2A220J	CHIP R 22 J 1/10W	
R109			RK73FB2A100J	CHIP R 10 J 1/10W	
R110			RK73FB2A151J	CHIP R 150 J 1/10W	
R111			RK73FB2A471J	CHIP R 470 J 1/10W	
R112			RK73FB2A102J	CHIP R 1.0K J 1/10W	
R113			RK73FB2A471J	CHIP R 470 J 1/10W	
R114			RK73FB2A562J	CHIP R 5.6K J 1/10W	
R115			RK73FB2A220J	CHIP R 22 J 1/10W	
R116			RK73FB2A150J	CHIP R 15 J 1/10W	

PARTS LSIT

RF UNIT (X44-3210-00)

Ref. No.	Address	New parts	Parts No.	Description			Destination
R117			RK73FB2A471J	CHIP R	470	J 1/10W	
R118			RK73FB2A680J	CHIP R	68	J 1/10W	
R119,120			RK73FB2A331J	CHIP R	330	J 1/10W	
R121			RK73FB2A102J	CHIP R	1.0K	J 1/10W	
R122,123			RK73FB2A100J	CHIP R	10	J 1/10W	
R124			RK73FB2A471J	CHIP R	470	J 1/10W	
R125,126			RK73FB2A100J	CHIP R	10	J 1/10W	
R127			RK73FB2A180J	CHIP R	18	J 1/10W	
R128			RK73FB2A331J	CHIP R	330	J 1/10W	
R130			RK73FB2A331J	CHIP R	330	J 1/10W	
R131			RK73FB2A101J	CHIP R	100	J 1/10W	
R132			RK73FB2A223J	CHIP R	22K	J 1/10W	
R133			RK73FB2A333J	CHIP R	33K	J 1/10W	
R134			RK73FB2A122J	CHIP R	1.2K	J 1/10W	
R139			RK73FB2A104J	CHIP R	100K	J 1/10W	
R140			RK73FB2A473J	CHIP R	47K	J 1/10W	
R142			RK73FB2A473J	CHIP R	47K	J 1/10W	
R143			RK73FB2A471J	CHIP R	470	J 1/10W	
R144			RK73FB2A221J	CHIP R	220	J 1/10W	
R145			RK73FB2A330J	CHIP R	33	J 1/10W	
R146			RK73FB2A471J	CHIP R	470	J 1/10W	
R147			RK73FB2A562J	CHIP R	5.6K	J 1/10W	
R148			RK73FB2A223J	CHIP R	22K	J 1/10W	
R150			RK73FB2A181J	CHIP R	180	J 1/10W	
R154			RK73FB2A471J	CHIP R	470	J 1/10W	
R156			RK73FB2A330J	CHIP R	33	J 1/10W	
R157			RK73FB2A182J	CHIP R	1.8K	J 1/10W	
R158			RK73FB2A330J	CHIP R	33	J 1/10W	
R159			RK73FB2A101J	CHIP R	100	J 1/10W	
R160,161			RK73FB2A222J	CHIP R	2.2K	J 1/10W	
R162			RK73FB2A101J	CHIP R	100	J 1/10W	
R163			RK73FB2A332J	CHIP R	3.3K	J 1/10W	
R164			RK73FB2A152J	CHIP R	1.5K	J 1/10W	
R165			RK73FB2A473J	CHIP R	47K	J 1/10W	
R166			RK73FB2A222J	CHIP R	2.2K	J 1/10W	
R167			RK73FB2A101J	CHIP R	100	J 1/10W	
R168			RK73FB2A393J	CHIP R	39K	J 1/10W	
R169			RK73FB2A102J	CHIP R	1.0K	J 1/10W	
R170			RK73FB2A223J	CHIP R	22K	J 1/10W	
R171,172			RK73FB2A101J	CHIP R	100	J 1/10W	
R173			RK73FB2A393J	CHIP R	39K	J 1/10W	
R174			RK73FB2A223J	CHIP R	22K	J 1/10W	
R175			RK73FB2A102J	CHIP R	1.0K	J 1/10W	
R176			RK73FB2A103J	CHIP R	10K	J 1/10W	
R177			RK73FB2A153J	CHIP R	15K	J 1/10W	
R178			RK73FB2A563J	CHIP R	56K	J 1/10W	
R179			RK73FB2A103J	CHIP R	10K	J 1/10W	
R180			RK73FB2A104J	CHIP R	100K	J 1/10W	
R181			RK73FB2A222J	CHIP R	2.2K	J 1/10W	
R182			RK73FB2A103J	CHIP R	10K	J 1/10W	
R183			RK73FB2A470J	CHIP R	47	J 1/10W	
R184			RK73FB2A121J	CHIP R	120	J 1/10W	
R185			RK73FB2A103J	CHIP R	10K	J 1/10W	
R186			RK73FB2A562J	CHIP R	5.6K	J 1/10W	
R188			RK73FB2A470J	CHIP R	47	J 1/10W	
R189			RK73FB2A152J	CHIP R	1.5K	J 1/10W	
R190			RK73FB2A103J	CHIP R	10K	J 1/10W	
R191			RK73FB2A151J	CHIP R	150	J 1/10W	
R192			RK73FB2A102J	CHIP R	1.0K	J 1/10W	

Ref. No.	Address	New parts	Parts No.	Description			Destination
R195,196			RK73FB2A330J	CHIP R	33	J 1/10W	
R197			RK73FB2A273J	CHIP R	27K	J 1/10W	
R198			RK73FB2A103J	CHIP R	10K	J 1/10W	
R199,200			RK73FB2A221J	CHIP R	220	J 1/10W	
R201			RK73FB2A473J	CHIP R	47K	J 1/10W	
R202,203			RK73FB2A680J	CHIP R	68	J 1/10W	
R204			RK73FB2A101J	CHIP R	100	J 1/10W	
R205,206			RK73FB2A471J	CHIP R	470	J 1/10W	
R207,208			RK73FB2A330J	CHIP R	33	J 1/10W	
R209			RK73FB2A471J	CHIP R	470	J 1/10W	
R210			RK73FB2A102J	CHIP R	1.0K	J 1/10W	
R211			RK73FB2A472J	CHIP R	4.7K	J 1/10W	
R212,213			RK73FB2A330J	CHIP R	33	J 1/10W	
R214			RK73FB2A103J	CHIP R	10K	J 1/10W	
R215			RK73FB2A823J	CHIP R	82K	J 1/10W	
R216			RK73FB2A681J	CHIP R	680	J 1/10W	
R217			RK73FB2A151J	CHIP R	150	J 1/10W	
R218			RK73FB2A332J	CHIP R	3.3K	J 1/10W	
R219			RK73FB2A103J	CHIP R	10K	J 1/10W	
R220			RK73FB2A101J	CHIP R	100	J 1/10W	
R221			RK73FB2A102J	CHIP R	1.0K	J 1/10W	
R222			RK73FB2A103J	CHIP R	10K	J 1/10W	
R223			RK73FB2A392J	CHIP R	3.9K	J 1/10W	
R224			RK73FB2A332J	CHIP R	3.3K	J 1/10W	
R225			RK73FB2A223J	CHIP R	22K	J 1/10W	
R226			RK73FB2A562J	CHIP R	5.6K	J 1/10W	
R229			RK73FB2A103J	CHIP R	10K	J 1/10W	
R230			RK73FB2A152J	CHIP R	1.5K	J 1/10W	
R231,232			RK73FB2A221J	CHIP R	220	J 1/10W	
R233			RK73FB2A152J	CHIP R	1.5K	J 1/10W	
R234			RK73FB2A101J	CHIP R	100	J 1/10W	
R235			RK73FB2A152J	CHIP R	1.5K	J 1/10W	
R236,237			RK73FB2A101J	CHIP R	100	J 1/10W	
R238			RK73FB2A152J	CHIP R	1.5K	J 1/10W	
R239			RK73FB2A101J	CHIP R	100	J 1/10W	
R240			RK73FB2A152J	CHIP R	1.5K	J 1/10W	
R241,242			RK73FB2A331J	CHIP R	330	J 1/10W	
R243			RK73FB2A152J	CHIP R	1.5K	J 1/10W	
R244			RK73FB2A101J	CHIP R	100	J 1/10W	
R245			RK73FB2A152J	CHIP R	1.5K	J 1/10W	
R246			RK73FB2A221J	CHIP R	220	J 1/10W	
R248			RK73FB2A822J	CHIP R	8.2K	J 1/10W	
R249			RK73FB2A222J	CHIP R	2.2K	J 1/10W	
R250			RK73FB2A103J	CHIP R	10K	J 1/10W	
R251			RK73FB2A153J	CHIP R	15K	J 1/10W	
R252			RK73FB2A102J	CHIP R	1.0K	J 1/10W	
R253			RK73FB2A472J	CHIP R	4.7K	J 1/10W	
R256			RK73FB2A472J	CHIP R	4.7K	J 1/10W	
R257			RK73FB2A101J	CHIP R	100	J 1/10W	
R258			RK73FB2A331J	CHIP R	330	J 1/10W	
R259			RK73FB2A104J	CHIP R	100K	J 1/10W	
R260			RK73FB2A102J	CHIP R	1.0K	J 1/10W	
R261			RK73FB2A331J	CHIP R	330	J 1/10W	
R262			RK73FB2A102J	CHIP R	1.0K	J 1/10W	
R263			RK73FB2A332J	CHIP R	3.3K	J 1/10W	
R264			RK73FB2A222J	CHIP R	2.2K	J 1/10W	
R265			RK73FB2A272J	CHIP R	2.7K	J 1/10W	
R266			RK73FB2A332J	CHIP R	3.3K	J 1/10W	
R267			RK73FB2A822J	CHIP R	8.2K	J 1/10W	

PARTS LIST

RF UNIT (X44-3210-00)

Ref. No.	Address	New parts	Parts No.	Description			Destination
R268			RK73FB2A273J	CHIP R	27K	J 1/10W	
R269			RK73FB2A103J	CHIP R	10K	J 1/10W	
R271			RK73FB2A224J	CHIP R	220K	J 1/10W	
R272			RK73FB2A104J	CHIP R	100K	J 1/10W	
R276			RK73FB2A474J	CHIP R	470K	J 1/10W	
R277			RK73FB2A103J	CHIP R	10K	J 1/10W	
R278			RK73FB2A224J	CHIP R	220K	J 1/10W	
R279			RK73FB2A473J	CHIP R	47K	J 1/10W	
R280			RK73FB2A223J	CHIP R	22K	J 1/10W	
R281			RK73FB2A222J	CHIP R	2.2K	J 1/10W	
R284			RK73FB2A224J	CHIP R	220K	J 1/10W	
R285			RK73FB2A103J	CHIP R	10K	J 1/10W	
R286			RK73FB2A101J	CHIP R	100	J 1/10W	
R287			RK73FB2A103J	CHIP R	10K	J 1/10W	
R288			RK73FB2A472J	CHIP R	4.7K	J 1/10W	
R289			RK73FB2A103J	CHIP R	10K	J 1/10W	
R290,291			RK73FB2A472J	CHIP R	4.7K	J 1/10W	
R292,293			RK73FB2A681J	CHIP R	680	J 1/10W	
R294-297			RK73FB2A224J	CHIP R	220K	J 1/10W	
R298			RK73FB2A472J	CHIP R	4.7K	J 1/10W	
R320			RK73FB2A472J	CHIP R	4.7K	J 1/10W	
R322,323			RK73FB2A223J	CHIP R	22K	J 1/10W	
R324			RK73FB2A101J	CHIP R	100	J 1/10W	
R325			RK73FB2A102J	CHIP R	1.0K	J 1/10W	
R329			RK73FB2A224J	CHIP R	220K	J 1/10W	
R330			RK73FB2A104J	CHIP R	100K	J 1/10W	
R331			RK73FB2A684J	CHIP R	680K	J 1/10W	
R332			RK73FB2A103J	CHIP R	10K	J 1/10W	
R333			RK73FB2A680J	CHIP R	68	J 1/10W	
R334			RK73FB2A391J	CHIP R	390	J 1/10W	
R335			RK73FB2A272J	CHIP R	2.7K	J 1/10W	
R336,337			RK73FB2A104J	CHIP R	100K	J 1/10W	
R338			RK73FB2A154J	CHIP R	150K	J 1/10W	
R339			RK73FB2A224J	CHIP R	220K	J 1/10W	
R340			RK73FB2A101J	CHIP R	100	J 1/10W	
R351-362			RK73FB2A103J	CHIP R	10K	J 1/10W	
R363			R92-0670-05	CHIP R	0 OHM		
R380			RK73FB2A682J	CHIP R	6.8K	J 1/10W	
R381			RK73FB2A183J	CHIP R	18K	J 1/10W	
R382			RK73FB2A181J	CHIP R	180	J 1/10W	
R383-385			R92-0670-05	CHIP R	0 OHM		
R386			RK73FB2A330J	CHIP R	33	J 1/10W	
R500			RK73FB2A103J	CHIP R	10K	J 1/10W	
R501			RK73FB2A470J	CHIP R	47	J 1/10W	
R502			RK73FB2A331J	CHIP R	330	J 1/10W	
R503			RK73FB2A472J	CHIP R	4.7K	J 1/10W	
R504			RK73FB2A681J	CHIP R	680	J 1/10W	
R505			RK73FB2A561J	CHIP R	560	J 1/10W	
R506			RK73FB2A333J	CHIP R	33K	J 1/10W	
R507			RK73FB2A101J	CHIP R	100	J 1/10W	
R508			RK73FB2A272J	CHIP R	2.7K	J 1/10W	
R509			RK73FB2A681J	CHIP R	680	J 1/10W	
R510			RK73FB2A470J	CHIP R	47	J 1/10W	
R511			RK73FB2A122J	CHIP R	1.2K	J 1/10W	
R512			RK73FB2A472J	CHIP R	4.7K	J 1/10W	
R513			RK73FB2A103J	CHIP R	10K	J 1/10W	
R514			RK73FB2A220J	CHIP R	22	J 1/10W	
R515			RK73FB2A331J	CHIP R	330	J 1/10W	
R516			RK73FB2A560J	CHIP R	56	J 1/10W	

Ref. No.	Address	New parts	Parts No.	Description			Destination
R517-519			RK73FB2A470J	CHIP R	47	J 1/10W	
R520			RK73FB2A101J	CHIP R	100	J 1/10W	
R521			RK73FB2A223J	CHIP R	22K	J 1/10W	
R522			RK73FB2A331J	CHIP R	330	J 1/10W	
R523			RK73FB2A470J	CHIP R	47	J 1/10W	
R524,525			RK73FB2A102J	CHIP R	1.0K	J 1/10W	
R526			RK73FB2A331J	CHIP R	330	J 1/10W	
R527			RK73FB2A680J	CHIP R	68	J 1/10W	
R528			RK73FB2A391J	CHIP R	390	J 1/10W	
R529			RK73FB2A680J	CHIP R	68	J 1/10W	
R530			RK73FB2A103J	CHIP R	10K	J 1/10W	
R531			RK73FB2A222J	CHIP R	2.2K	J 1/10W	
R532			RK73FB2A151J	CHIP R	150	J 1/10W	
R533			RK73FB2A680J	CHIP R	68	J 1/10W	
R534			RK73FB2A101J	CHIP R	100	J 1/10W	
R535			RK73FB2A471J	CHIP R	470	J 1/10W	
R536			RK73FB2A470J	CHIP R	47	J 1/10W	
R537			RK73FB2A220J	CHIP R	22	J 1/10W	
R545			RK73FB2A103J	CHIP R	10K	J 1/10W	
R546			RK73FB2A821J	CHIP R	820	J 1/10W	
R547			RK73FB2A331J	CHIP R	330	J 1/10W	
R548,549			RK73FB2A470J	CHIP R	47	J 1/10W	
R550			RK73FB2A181J	CHIP R	180	J 1/10W	
R551			RK73FB2A221J	CHIP R	220	J 1/10W	
R552			RK73FB2A101J	CHIP R	100	J 1/10W	
R553			RK73FB2A333J	CHIP R	33K	J 1/10W	
R554			RK73FB2A682J	CHIP R	6.8K	J 1/10W	
R555,556			RK73FB2A101J	CHIP R	100	J 1/10W	
R557			RK73FB2A221J	CHIP R	220	J 1/10W	
R558			RK73FB2A101J	CHIP R	100	J 1/10W	
R559,560			RK73FB2A473J	CHIP R	47K	J 1/10W	
R561,562			RK73FB2A101J	CHIP R	100	J 1/10W	
R563			RK73FB2A102J	CHIP R	1.0K	J 1/10W	
R564			RK73FB2A681J	CHIP R	680	J 1/10W	
R565			RK73FB2A101J	CHIP R	100	J 1/10W	
R566			RK73FB2A471J	CHIP R	470	J 1/10W	
R567			RK73FB2A221J	CHIP R	220	J 1/10W	
R570,571			RK73FB2A222J	CHIP R	2.2K	J 1/10W	
R572			RK73FB2A272J	CHIP R	2.7K	J 1/10W	
R580-583			RK73FB2A223J	CHIP R	22K	J 1/10W	
R584			RK73FB2A101J	CHIP R	100	J 1/10W	
R586			RK73FB2A682J	CHIP R	6.8K	J 1/10W	
R587			RK73FB2A473J	CHIP R	47K	J 1/10W	
R588,589			RK73FB2A101J	CHIP R	100	J 1/10W	
R591			RK73FB2A682J	CHIP R	6.8K	J 1/10W	
R592			RK73FB2A473J	CHIP R	47K	J 1/10W	
R593,594			RK73FB2A101J	CHIP R	100	J 1/10W	
R596			RK73FB2A682J	CHIP R	6.8K	J 1/10W	
R597			RK73FB2A473J	CHIP R	47K	J 1/10W	
R598,599			RK73FB2A101J	CHIP R	100	J 1/10W	
R601			RK73FB2A682J	CHIP R	6.8K	J 1/10W	
R602			RK73FB2A473J	CHIP R	47K	J 1/10W	
R603			RK73FB2A101J	CHIP R	100	J 1/10W	
R604			RK73FB2A470J	CHIP R	47	J 1/10W	
R605			RK73FB2A392J	CHIP R	3.9K	J 1/10W	
R606			RK73FB2A103J	CHIP R	10K	J 1/10W	
R608			RK73FB2A471J	CHIP R	470	J 1/10W	
R609,610			RK73FB2A103J	CHIP R	10K	J 1/10W	
R611			RK73FB2A102J	CHIP R	1.0K	J 1/10W	

PARTS LSIT

RF UNIT (X44-3210-00)

Ref. No.	Address	New parts	Parts No.	Description	Destination
R612			RK73FB2A821J	CHIP R 820 J 1/10W	
R613			RK73FB2A271J	CHIP R 270 J 1/10W	
R614			RK73FB2A101J	CHIP R 100 J 1/10W	
R615			RK73FB2A220J	CHIP R 22 J 1/10W	
R616			RK73FB2A470J	CHIP R 47 J 1/10W	
R617			RK73FB2A392J	CHIP R 3.9K J 1/10W	
R618			RK73FB2A103J	CHIP R 10K J 1/10W	
R619			RK73FB2A220J	CHIP R 22 J 1/10W	
R620			RK73FB2A471J	CHIP R 470 J 1/10W	
R621			RK73FB2A183J	CHIP R 18K J 1/10W	
R622			RK73FB2A122J	CHIP R 1.2K J 1/10W	
R623			RK73FB2A102J	CHIP R 1.0K J 1/10W	
R624			RK73FB2A334J	CHIP R 330K J 1/10W	
R625			RK73FB2A182J	CHIP R 1.8K J 1/10W	
R626			RK73FB2A331J	CHIP R 330 J 1/10W	
R627			RK73FB2A102J	CHIP R 1.0K J 1/10W	
R628			RK73FB2A101J	CHIP R 100 J 1/10W	
R629			RK73FB2A821J	CHIP R 820 J 1/10W	
R630			RK73FB2A822J	CHIP R 8.2K J 1/10W	
R631			RK73FB2A103J	CHIP R 10K J 1/10W	
R632			RK73FB2A102J	CHIP R 1.0K J 1/10W	
R633			RK73FB2A181J	CHIP R 180 J 1/10W	
R634			RK73FB2A331J	CHIP R 330 J 1/10W	
R635			RK73FB2A823J	CHIP R 82K J 1/10W	
R636			RK73FB2A333J	CHIP R 33K J 1/10W	
R637			RK73FB2A101J	CHIP R 100 J 1/10W	
R638			RK73FB2A470J	CHIP R 47 J 1/10W	
R639			RK73FB2A682J	CHIP R 6.8K J 1/10W	
R640			RK73FB2A102J	CHIP R 1.0K J 1/10W	
R641			RK73FB2A151J	CHIP R 150 J 1/10W	
R642			RK73FB2A150J	CHIP R 15 J 1/10W	
R643			RK73FB2A471J	CHIP R 470 J 1/10W	
R644			RK73FB2A103J	CHIP R 10K J 1/10W	
R645			RK73FB2A392J	CHIP R 3.9K J 1/10W	
R646			RK73FB2A822J	CHIP R 8.2K J 1/10W	
R647			RK73FB2A102J	CHIP R 1.0K J 1/10W	
R648			RK73FB2A684J	CHIP R 680K J 1/10W	
R649			RK73FB2A182J	CHIP R 1.8K J 1/10W	
R650			RK73FB2A103J	CHIP R 10K J 1/10W	
R651			RK73FB2A472J	CHIP R 4.7K J 1/10W	
R652			RK73FB2A103J	CHIP R 10K J 1/10W	
R653			RK73FB2A104J	CHIP R 100K J 1/10W	
R655-656			RK73FB2A103J	CHIP R 10K J 1/10W	
R657			RK73FB2A471J	CHIP R 470 J 1/10W	
R658			RK73FB2A101J	CHIP R 100 J 1/10W	
R659			RK73FB2A470J	CHIP R 47 J 1/10W	
R690-697			RK73FB2A221J	CHIP R 220 J 1/10W	
R699			RK73FB2A102J	CHIP R 1.0K J 1/10W	
R710-712			RK73FB2A103J	CHIP R 10K J 1/10W	
R800			RK73FB2A223J	CHIP R 22K J 1/10W	
R801			RK73FB2A103J	CHIP R 10K J 1/10W	
R802			RK73FB2A222J	CHIP R 2.2K J 1/10W	
R803			RK73FB2A271J	CHIP R 270 J 1/10W	
R804			RK73FB2A101J	CHIP R 100 J 1/10W	
R901-902			RK73FB2A101J	CHIP R 100 J 1/10W	
R903-906			RK73FB2A101J	CHIP R 100 J 1/10W	
R908-920			RK73FB2A101J	CHIP R 100 J 1/10W	
R925-928			RK73EB2B221J	CHIP R 220 J 1/8W	
VR2			R12-6417-05	TRIMMING POT. 1K	

Ref. No.	Address	New parts	Parts No.	Description	Destination
VR3			R12-6427-05	TRIMMING POT. 47K	
VR901-904		*	R31-0605-05	VARIABLE RESISTOR 100K	
VR905,906		*	R31-0606-05	VARIABLE RESISTOR 10K	
K1-3			S51-1428-05	RELAY	
K4			S51-1420-05	RELAY	
S800			S31-2420-05	SLIDE SWITCH	
D1-3			LFB01	DIODE	
D4-7			RLS245	DIODE	
D8			1SV128	DIODE	
D10			LFB01	DIODE	
D11			1SV128	DIODE	
D12			RLS135	DIODE	
D13			1SV128	DIODE	
D14			RLS135	DIODE	
D15			1SV128	DIODE	
D16			RLS135	DIODE	
D17			1SV128	DIODE	
D18			RLS135	DIODE	
D19			1SV128	DIODE	
D20			RLS135	DIODE	
D21			1SV128	DIODE	
D22			RLS135	DIODE	
D23			1SV128	DIODE	
D24			RLS135	DIODE	
D25			1SV128	DIODE	
D26			RLS135	DIODE	
D27			1SV128	DIODE	
D28			RLS135	DIODE	
D29			1SV128	DIODE	
D30			RLS135	DIODE	
D31			1SV128	DIODE	
D32			RLS135	DIODE	
D33			1SV128	DIODE	
D35			RLS135	DIODE	
D36			1SV128	DIODE	
D37			RLS135	DIODE	
D38,39			1SV128	DIODE	
D40			RLS135	DIODE	
D41			1SV128	DIODE	
D42,43			DAN235K	DIODE	
D46			HSM88ASR	DIODE	
D47			LFB01	DIODE	
D49			1SV172	DIODE	
D50			RD6.2M(B1)	ZENER DIODE	
D51			B30-2004-05	LED	
D52			RD12M(B2)	ZENER DIODE	
D53,54			1SS355	DIODE	
D55			RD3.0M(B2)	ZENER DIODE	
D56			1SS355	DIODE	
D57			B30-2004-05	LED	
D58			LFB01	DIODE	
D59			1SS355	DIODE	
D60,61			DAN202K	DIODE	
D62-69			1SV128	DIODE	
D70			RD6.2M(B1)	ZENER DIODE	
D71			RD4.7M(B2)	ZENER DIODE	
D72			1SS355	DIODE	
D500			1SV166	DIODE	

PARTS LIST

RF UNIT (X44-3210-00)
FINAL UNIT (X45-351X-XX)

Ref. No.	Address	New parts	Parts No.	Description	Destination
D501			RLS73	DIODE	
D502			1SV166	DIODE	
D503			RLS73	DIODE	
D504			1SV166	DIODE	
D505			RLS73	DIODE	
D506			1SV166	DIODE	
D507			RLS73	DIODE	
D508			1SS181	DIODE	
IC1,2			TC9174F	IC (CMOS I/O EXTENSION)	
IC6			NJM2904M	IC (OP AMP X2)	
IC7			M62363FP	IC (8bit D/A CONVERTER)	
IC8			NJM2902M	IC (OP AMP X4)	
IC9			NJM2903M	IC (COMPARATOR X2)	
IC10			NJM78L05UA	IC (VOLTAGE REGULATOR/ +5V)	
IC500-502			F71022	IC (DDS)	
IC503			UPD74HC390G	IC (DUAL DECADE COUNTER)	
IC505,506			SN16913P	IC (DUBLE BALANCED MIXERS)	
IC507			MB86001PF	IC	
IC508			SN76514N	IC (MIXER)	
IC509			MB86001PF	IC	
IC510			TA78L09F	IC (VOLTAGE REGULATOR/ +9V)	
IC511		*	TA78DS09F	IC	
PL1,2		*	B30-2134-05	LAMP	
Q1			DTA124EK	DIGITAL TRANSISTOR	
Q2			DTC124EK	DIGITAL TRANSISTOR	
Q3			FMA1	TRANSISTOR	
Q5			2SC2954	TRANSISTOR	
Q6			2SC2712(Y)	TRANSISTOR	
Q7-12			FMG4	TRANSISTOR	
Q13			3SK131(M)	FET	
Q14,15		*	2SK2218(5)	FET	
Q16			2SC2954	TRANSISTOR	
Q17-20			2SK520(K44)	FET	
Q21			2SD1624(S)	TRANSISTOR	
Q22			2SC2714(Y)	TRANSISTOR	
Q23,24			3SK131(M)	FET	
Q26,27			2SK520(K43)	FET	
Q28-32			2SC2712(Y)	TRANSISTOR	
Q33			3SK131(M)	FET	
Q35,36			3SK184(R)	FET	
Q37-39			3SK131(M)	FET	
Q42			DTC124EK	DIGITAL TRANSISTOR	
Q43,44			2SC2712(Y)	TRANSISTOR	
Q45,46			DTC143TK	DIGITAL TRANSISTOR	
Q47			2SC2712(Y)	TRANSISTOR	
Q48			DTA124EK	DIGITAL TRANSISTOR	
Q49			2SC2712(Y)	TRANSISTOR	
Q50			2SK208(Y)	FET	
Q51			DTC124EK	DIGITAL TRANSISTOR	
Q52			2SC2712(Y)	TRANSISTOR	
Q54			2SC2712(Y)	TRANSISTOR	
Q55			2SB1188(Q,R)	TRANSISTOR	
Q56			DTC124EK	DIGITAL TRANSISTOR	
Q57,58			2SB1188(Q,R)	TRANSISTOR	
Q59,60			DTC143EK	DIGITAL TRANSISTOR	
Q61			FMC3	TRANSISTOR	
Q62			DTA143EK	DIGITAL TRANSISTOR	
Q63			FMC3	TRANSISTOR	
Q64			DTA143EK	DIGITAL TRANSISTOR	

Ref. No.	Address	New parts	Parts No.	Description	Destination
Q65			2SA1162(Y)	TRANSISTOR	
Q66			DTC114EK	DIGITAL TRANSISTOR	
Q70			DTC114EK	DIGITAL TRANSISTOR	
Q71			DTA114EK	DIGITAL TRANSISTOR	
Q500-503			2SC2712(Y)	TRANSISTOR	
Q504,505			2SK508NV(K53)	FET	
Q506-508			2SC2712(Y)	TRANSISTOR	
Q510,511			2SC2712(Y)	TRANSISTOR	
Q512-514			2SC2714(Y)	TRANSISTOR	
Q515			2SC2712(Y)	TRANSISTOR	
Q516-519			DTC114EK	DIGITAL TRANSISTOR	
Q520-523			2SK508NV(K53)	FET	
Q524,525			2SC2714(Y)	TRANSISTOR	
Q526			2SC2996(Y,O)	TRANSISTOR	
Q527-529			2SC3722K(R)	TRANSISTOR	
Q530			2SC2712(Y)	TRANSISTOR	
Q531			2SC2714(Y)	TRANSISTOR	
Q532			2SC2954	TRANSISTOR	
Q533			DTA124EK	DIGITAL TRANSISTOR	
Q534-536			2SC3722K(R)	TRANSISTOR	
Q537			2SD1757K	TRANSISTOR	
Q539			2SC2714(Y)	TRANSISTOR	
Q800			2SC2714(Y)	TRANSISTOR	
TH1			157-101-53019	THERMISTOR 100	
TH2			157-302-53008	THERMISTOR 3K	
TH3			157-101-53019	THERMISTOR 100	
TH4			157-302-53008	THERMISTOR 3K	
S901,902			W02-1687-15	ENCODER (FILTER)	
S903		*	W02-1861-05	ENCODER (RIT/XIT)	
S904			W02-1660-15	ENCODER (M.CH/VFO.CH)	
A501	2F		X58-3390-03	SUB UNIT (VCO2)	

FINAL UNIT (X45-351X-XX) 0-00 : K,P,M,M2,X 2-71 : E,E2,E3,E9

C1			CK73FF1H473Z	CHIP C	0.047UF	Z
C2			CC73FCH1H101J	CHIP C	100PF	J
C3			CC45FCH2H030C	CERAMIC	3.0PF	C
C4			CC73FCH1H560J	CHIP C	56PF	J
C5			CK73FF1H473Z	CHIP C	0.047UF	Z
C6			CE04EW1H010M	ELECTRO	1.0UF	50WV
C7			CK73FB1H103K	CHIP C	0.010UF	K
C8-18			CK73FB1H102K	CHIP C	1000PF	K
C19-33			CK73FB1H103K	CHIP C	0.010UF	K
C101			CM93D2H102J	MICA	1000PF	J
C102			CC45FSL2H331J	CERAMIC	330PF	J
C103			CC45FSL2H271J	CERAMIC	270PF	J
C104,105			CM93D2H102J	MICA	1000PF	J
C106			CC45FSL2H151J	CERAMIC	150PF	J
C107			CM93D2H222J	MICA	2200PF	J
C108		*	CC45FSL2H181J	CERAMIC	180PF	J
C109			CC45FSL2H101J	CERAMIC	100PF	J
C110			CM93D2H102J	MICA	1000PF	J
C111			CM93D2H561J	MICA	560PF	J
C112			CC45FSL2H471J	CERAMIC	470PF	J
C113,114		*	CC45FSL2H181J	CERAMIC	180PF	J
C115			CC45FSL2H391J	CERAMIC	390PF	J
C116			CC45FSL2H471J	CERAMIC	470PF	J

PARTS LSIT

FINAL UNIT (X45-351X-XX)

Ref. No.	Address	New parts	Parts No.	Description			Destination
C117			CC45FSL2H271J	CERAMIC	270PF	J	
C118			CC45FSL2H391J	CERAMIC	390PF	J	
C119			CC45FSL2H471J	CERAMIC	470PF	J	
C120		*	CC45FSL2H181J	CERAMIC	180PF	J	
C121			CC45FSL2H331J	CERAMIC	330PF	J	
C122			CC45FSL2H820J	CERAMIC	82PF	J	
C123			CC45FSL2H331J	CERAMIC	330PF	J	
C124			CC45FSL2H121J	CERAMIC	120PF	J	
C125			CC45FSL2H270J	CERAMIC	27PF	J	
C126			CC45FSL2H151J	CERAMIC	150PF	J	
C127			CC45FSL2H471J	CERAMIC	470PF	J	
C128			CC45FSL2H270J	CERAMIC	27PF	J	
C129			CC45FSL2H220J	CERAMIC	22PF	J	
C130			CC45FSL2H331J	CERAMIC	330PF	J	
C131			CC45FSL2H471J	CERAMIC	470PF	J	
C132			CC45FSL2H680J	CERAMIC	68PF	J	
C133			CC45FSL2H560J	CERAMIC	56PF	J	
C134			CC45FSL2H151J	CERAMIC	150PF	J	
C135			CC45FSL2H471J	CERAMIC	470PF	J	
C136			CC45FSL2H560J	CERAMIC	56PF	J	
C137			CC45FSL2H151J	CERAMIC	150PF	J	
C138			CC45FSL2H331J	CERAMIC	330PF	J	
C139			CC45FSL2H330J	CERAMIC	33PF	J	
C140,141			CC45FSL2H221J	CERAMIC	220PF	J	
C142			CC45FSL2H101J	CERAMIC	100PF	J	
C143,144			CC45FSL2H151J	CERAMIC	150PF	J	
C145			CC45FSL2H120J	CERAMIC	12PF	J	
C146			CC45FSL2H271J	CERAMIC	270PF	J	
C147			CC45FSL2H390J	CERAMIC	39PF	J	
C148,149			CC45FSL2H820J	CERAMIC	82PF	J	
C150			CC45FSL2H100D	CERAMIC	10PF	D	
C151			CC45FSL2H121J	CERAMIC	120PF	J	
C152			CC45FSL2H470J	CERAMIC	47PF	J	
C153			CC45FSL2H330J	CERAMIC	33PF	J	
C154			CC45FSL2H820J	CERAMIC	82PF	J	
C161			CC45FSL2H100D	CERAMIC	10PF	D	
C162		*	CC45FSL2H090D	CERAMIC	9.0PF	D	
C163			CC45FSL2H270J	CERAMIC	27PF	J	
C301,302			CK73FB1H103K	CHIP C	0.010UF	K	
C304			CC73FCH1H101J	CHIP C	100PF	J	
C305			CC73FCH1H181J	CHIP C	180PF	J	
C306			CC73FCH1H390J	CHIP C	39PF	J	
C401			CE04EW1C470M	ELECTRO	47UF	16WV	
C402			CE04EW1C100M	ELECTRO	10UF	16WV	
C405			CE04EW1E470M	ELECTRO	47UF	25WV	
C406,407			CK73FB1E104K	CHIP C	0.10UF	K	
C408			CE04EW1E470M	ELECTRO	47UF	25WV	
C409			CK73FB1E104K	CHIP C	0.10UF	K	
C410			CE04EW1C470M	ELECTRO	47UF	16WV	
C411			CK73FB1H103K	CHIP C	0.010UF	K	
C412,413			CK73FB1H222K	CHIP C	2200PF	K	
C414			CE04EW1C330M	ELECTRO	33UF	16WV	
C415,416			CE04EW1C101M	ELECTRO	100UF	16WV	
C417			CK73FB1H103K	CHIP C	0.010UF	K	
C418-420			CK73FB1H102K	CHIP C	1000PF	K	
C421			CK73FB1H103K	CHIP C	0.010UF	K	
C422			CE04EW1E470M	ELECTRO	47UF	25WV	
C431-433			CK73FB1H103K	CHIP C	0.010UF	K	
C435			CK73FB1E104K	CHIP C	0.10UF	K	

Ref. No.	Address	New parts	Parts No.	Description			Destination
C436			CK73FB1H102K	CHIP C	1000PF	K	
C437			CK73FB1H103K	CHIP C	0.010UF	K	
C438			CE04EW1H010M	ELECTRO	1.0UF	50WV	
C439			CK73FB1H103K	CHIP C	0.010UF	K	
C450			CK73FB1H103K	CHIP C	0.010UF	K	
C452-454			CK73FB1H103K	CHIP C	0.010UF	K	
C455			CK73FB1H102K	CHIP C	1000PF	K	
C456-458			CK73FB1H103K	CHIP C	0.010UF	K	
C461			CC73FSL1H221J	CHIP C	220PF	J	
C465			CK73FB1E104K	CHIP C	0.10UF	K	
C466-471			CK73FF1C105Z	CHIP C	1.0UF	Z	
C472,473			CK73FB1E104K	CHIP C	0.10UF	K	
C479			CE04EW1H010M	ELECTRO	1.0UF	50WV	
C480-485			CK73FB1H103K	CHIP C	0.010UF	K	
C486-488			CK73FB1E104K	CHIP C	0.10UF	K	
C489			CC73FCH1H470J	CHIP C	47PF	J	
C490,491			CK73FB1H103K	CHIP C	0.010UF	K	
C492			CK73FB1E104K	CHIP C	0.10UF	K	
C493			CK73FB1H103K	CHIP C	0.010UF	K	
C494-496			CK73FB1E104K	CHIP C	0.10UF	K	
C497-499			CK73FB1H103K	CHIP C	0.010UF	K	
C502			CK73FB1E473K	CHIP C	0.047UF	K	
C503			CK73FB1H102K	CHIP C	1000PF	K	
C504,505			CK73FB1E473K	CHIP C	0.047UF	K	
C506			CK73FB1E223K	CHIP C	0.022UF	K	
C507			CK73FB1H681K	CHIP C	680PF	K	
C508,509			CK73FB1E473K	CHIP C	0.047UF	K	
C510,511			CK73FB1E223K	CHIP C	0.022UF	K	
C512			CE04EW1C100M	ELECTRO	10UF	16WV	
C513			CC45FSL2H151J	CERAMIC	150PF	J	
C514,515			CK73FB1E223K	CHIP C	0.022UF	K	
C516			CE04EW1E101M	ELECTRO	100UF	25WV	
C517			CM93D2H681J	MICA	680PF	J	
C518,519			C91-1004-05	CHIP C	6800PF	J	
C520			CK73FB1H102K	CHIP C	1000PF	K	
C521			CK73FB1E473K	CHIP C	0.047UF	K	
C522			CE04EW1C100M	ELECTRO	10UF	16WV	
C523			CK73FB1E223K	CHIP C	0.022UF	K	
C524			CE04EW1E470M	ELECTRO	47UF	25WV	
C525			CM73F2H122J	CHIP C	1200PF	J	
C526			CC45FSL2H151J	CERAMIC	150PF	J	
C527			CE04EW1E101M	ELECTRO	100UF	25WV	
C528,529			CK73FB1E104K	CHIP C	0.10UF	K	
C533			CM73F2H561J	CHIP C	560PF	J	
C550			CK73FB1E104K	CHIP C	0.10UF	K	
C551			CK73FB1H103K	CHIP C	0.010UF	K	
C552,553			CK73FB1H102K	CHIP C	1000PF	K	
C554			CK73FB1H223K	CHIP C	0.022UF	K	
C557			CK73FB1H102K	CHIP C	1000PF	K	
C558			CK73FB1H103K	CHIP C	0.010UF	K	
C559			CK73FB1E104K	CHIP C	0.10UF	K	
C560-563		*	C91-1171-05	HV C	0.01UF	1KWV	
C601			CK73FB1H103K	CHIP C	0.010UF	K	
C602			CE04EW1E102M	ELECTRO	1000UF	25WV	
C603			CK73FB1H103K	CHIP C	0.010UF	K	
C605,606			CK73FB1H103K	CHIP C	0.010UF	K	
C608,609			CK73FB1E104K	CHIP C	0.10UF	K	
C610,611			CK73FB1E473K	CHIP C	0.047UF	K	
C612,613			CE04EW1E470M	ELECTRO	47UF	25WV	

PARTS LIST

FINAL UNIT (X45-351X-XX)

Ref. No.	Address	New parts	Parts No.	Description	Destination
C614			CE04EW1E102M	ELECTRO 1000UF 25WV	
C620			CK73FF1E104Z	CHIP C 0.10UF Z	
C621,622			CE04EW1E470M	ELECTRO 47UF 25WV	
C623			CK73FF1E104Z	CHIP C 0.10UF Z	
C701-711			CK73FB1H103K	CHIP C 0.010UF K	
C712			CE04EW1C471M	ELECTRO 470UF 16WV	
C713			CK73FB1E103K	CHIP C 0.010UF K	
C901			CK73FB1H103K	CHIP C 0.010UF K	
C903			CE04EW1H2R2M	ELECTRO 2.2UF 50WV	
TC1			C05-0030-15	TRIMMER CAPACITOR 20PF	
CN1,2			E04-0191-05	RF COAXIAL CABLE SOCKET	
CN3			E40-5469-05	FLAT CABLE CONNECTOR (12P)	
CN4			E40-5068-05	PIN CONNECTOR (11P)	
CN5			E23-0996-05	TERMINAL (TEST)	
CN301			E40-3238-05	PIN CONNECTOR (3P)	
CN302-305			E04-0191-05	RF COAXIAL CABLE SOCKET	
CN306,307			E23-0996-05	TERMINAL (TEST)	
CN401			E23-5745-05	FLAT CABLE CONNECTOR (20P)	
CN402			E40-5469-05	FLAT CABLE CONNECTOR (12P)	
CN403			E40-3242-05	PIN CONNECTOR (7P)	
CN404			E40-3237-05	PIN CONNECTOR (2P)	
CN405			E40-3239-05	PIN CONNECTOR (4P)	
CN406			E40-5470-05	FLAT CABLE CONNECTOR (13P)	
CN407			E40-3240-05	PIN CONNECTOR (5P)	
CN410			E04-0154-05	RF COAXIAL CABLE SOCKET	
CN411			E40-3239-05	PIN CONNECTOR (4P)	
CN412			E04-0154-05	RF COAXIAL CABLE SOCKET	
CN413			E40-3238-05	PIN CONNECTOR (3P)	
CN501,502			E04-0191-05	RF COAXIAL CABLE SOCKET	
CN503			E40-3240-05	PIN CONNECTOR (5P)	
CN504			E40-3238-05	PIN CONNECTOR (3P)	
CN505-507			E23-0996-05	TERMINAL (TEST)	
CN601			E40-3238-05	PIN CONNECTOR (3P)	
CN602			E40-3239-05	PIN CONNECTOR (4P)	
CN603			E40-5470-05	FLAT CABLE CONNECTOR (13P)	
CN604			E40-3240-05	PIN CONNECTOR (5P)	
CN605			E40-3237-05	PIN CONNECTOR (2P)	
W1	1J,2K	*	E37-0539-05	LEAD WIRE WITH CONNECTOR	
W501	1J,2J	*	E37-0525-05	LEAD WIRE WITH TERMINALR	
W502	2J		E37-0067-05	LEAD WIRE WITH MINIPIN PLUG	
202	2G		F29-0014-05	INSULATING BUSH	
F401			F06-4029-05	FUSE (4A 250V) : C/5	
F601			F53-0093-05	FUSE (5A 125V) : D/5	
A401,402			J13-0075-05	FUSE CLIP : C/5	
CF451			L72-0319-05	CERAMIC FILTER (455KHZ)	
CF452			L72-0333-05	CERAMIC FILTER (455KHZ)	
CF453			L72-0366-05	CERAMIC FILTER (455KHZ)	
L1			L40-2221-33	SMALL FIXED INDUCTOR	
L2			L39-0480-15	TROIDAL COIL	
L3			L40-2221-33	SMALL FIXED INDUCTOR	
L4-10			L40-1015-48	SMALL FIXED INDUCTOR (100UH)	
L101			L39-0491-05	TROIDAL COIL (CORE : L92-0107-05)	
L102			L39-0492-05	TROIDAL COIL (CORE : L92-0107-05)	
L103			L39-0493-05	TROIDAL COIL (CORE : L92-0107-05)	
L104			L39-1223-05	TROIDAL COIL (CORE : L92-0107-05)	
L105			L39-1224-05	TROIDAL COIL (CORE : L92-0107-05)	
L106			L39-1225-05	TROIDAL COIL (CORE : L92-0107-05)	
L107			L39-1222-05	TROIDAL COIL (CORE : L92-0107-05)	

Ref. No.	Address	New parts	Parts No.	Description	Destination
L108			L39-1223-05	TROIDAL COIL (CORE : L92-0107-05)	
L109,110			L39-1221-05	TROIDAL COIL (CORE : L92-0108-05)	
L111			L34-1279-05	COIL	
L112			L34-1281-05	COIL	
L113			L34-1279-05	COIL	
L114			L34-1280-05	COIL	
L115			L34-1281-05	COIL	
L116			L34-1282-05	COIL	
L301,302			L40-1015-48	SMALL FIXED INDUCTOR (100UH)	
L303,304			L34-1035-05	COIL	
L401			L40-1015-48	SMALL FIXED INDUCTOR (100UH)	
L450			L40-2215-48	SMALL FIXED INDUCTOR (220UH)	
L451			L34-0943-05	COIL	
L452			L34-4255-05	COIL	
L453		*	L40-4711-15	SMALL FIXED INDUCTOR	
L454			L40-2221-33	SMALL FIXED INDUCTOR	
L455,456			L34-4254-05	COIL	
L457,458			L34-4255-05	COIL	
L460			L40-3395-48	SMALL FIXED INDUCTOR (3.3UH)	
L461-465			L40-1092-12	SMALL FIXED INDUCTOR	
L466			L40-1592-15	SMALL FIXED INDUCTOR	
L501		*	L40-1505-48	SMALL FIXED INDUCTOR (15UH)	
L502			L40-3395-48	SMALL FIXED INDUCTOR (3.3UH)	
L503			L39-0481-05	TROIDAL COIL	
L504			L33-0617-15	CHOKE COIL	
L505,506			L33-0699-05	CHOKE COIL	
L507			L39-1257-05	TROIDAL COIL	
L508,509			L33-0617-15	CHOKE COIL	
L510			L39-0482-05	TROIDAL COIL	
L511			L33-0651-05	CHOKE COIL	
L512			L33-0617-15	CHOKE COIL	
L513			L39-1209-25	TROIDAL COIL	
L514		*	L40-1505-48	SMALL FIXED INDUCTOR (15UH)	
L515,516		*	L92-0150-05	TROIDAL CORE (W501)	
L520			L40-3985-48	SMALL FIXED INDUCTOR (390NH)	
L601			L40-1005-48	SMALL FIXED INDUCTOR (10UH)	
L602			L40-1092-12	SMALL FIXED INDUCTOR	
R	2G,2H		N67-3010-46	PAN HEAD SEMS SCREW	
K	2G,2H		N87-3006-46	BRAZIER HEAD TAPTITE SCREW	
R1			RK73FB2A100J	CHIP R 10 J 1/10W	
R2-5			RK73FB2A330J	CHIP R 33 J 1/10W	
R6-9			RK73FB2A270J	CHIP R 27 J 1/10W	
R10			RK73FB2A181J	CHIP R 180 J 1/10W	
R11-13			RK73FB2A101J	CHIP R 100 J 1/10W	
R14			RK73FB2A473J	CHIP R 47K J 1/10W	
R15			RK73FB2A103J	CHIP R 10K J 1/10W	
R20			RK73FB2A393J	CHIP R 39K J 1/10W	
R21			RK73FB2A223J	CHIP R 22K J 1/10W	
R22			RK73FB2A104J	CHIP R 100K J 1/10W	
R301-304			RK73FB2A104J	CHIP R 100K J 1/10W	
R305			RK73FB2A473J	CHIP R 47K J 1/10W	
R401			RK73FB2A100J	CHIP R 10 J 1/10W	
R402			RK73FB2A272J	CHIP R 2.7K J 1/10W	
R403,404			RK73FB2A273J	CHIP R 27K J 1/10W	
R405			RK73FB2A473J	CHIP R 47K J 1/10W	
R406			RK73FB2A150J	CHIP R 15 J 1/10W	
R407			RK73FB2A221J	CHIP R 220 J 1/10W	
R408			RK73FB2A101J	CHIP R 100 J 1/10W	

PARTS LSIT

FINAL UNIT (X45-351X-XX)

Ref. No.	Address	New parts	Parts No.	Description				Destination
R409 410			R92-1332-05	CHIP R	160	J	1W	
R411			RK73FB2A182J	CHIP R	1.8K	J	1/10W	
R415			RK73FB2A101J	CHIP R	100	J	1/10W	
R416			RK73FB2A220J	CHIP R	22	J	1/10W	
R417			RK73FB2A101J	CHIP R	100	J	1/10W	
R418			RK73FB2A102J	CHIP R	1.0K	J	1/10W	
R419			RK73FB2A104J	CHIP R	100K	J	1/10W	
R420			RK73FB2A102J	CHIP R	1.0K	J	1/10W	
R421			RK73FB2A393J	CHIP R	39K	J	1/10W	
R422			RK73FB2A220J	CHIP R	22	J	1/10W	
R423,424			RK73FB2A331J	CHIP R	330	J	1/10W	
R425			RK73FB2A220J	CHIP R	22	J	1/10W	
R426			RK73FB2A103J	CHIP R	10K	J	1/10W	
R427			RK73FB2A102J	CHIP R	1.0K	J	1/10W	
R428			RK73FB2A222J	CHIP R	2.2K	J	1/10W	
R429			RK73FB2A102J	CHIP R	1.0K	J	1/10W	
R439			RK73FB2A470J	CHIP R	47	J	1/10W	
R440			RK73FB2A152J	CHIP R	1.5K	J	1/10W	
R441,442			RK73FB2A332J	CHIP R	3.3K	J	1/10W	
R443,444			RK73FB2A101J	CHIP R	100	J	1/10W	
R445,446			RK73FB2A472J	CHIP R	4.7K	J	1/10W	
R447,448			RK73FB2A101J	CHIP R	100	J	1/10W	
R449,450			RK73FB2A222J	CHIP R	2.2K	J	1/10W	
R451,452			RK73FB2A101J	CHIP R	100	J	1/10W	
R453			RK73FB2A152J	CHIP R	1.5K	J	1/10W	
R454,455			RK73FB2A332J	CHIP R	3.3K	J	1/10W	
R456			RK73FB2A333J	CHIP R	33K	J	1/10W	
R457,458			RK73FB2A104J	CHIP R	100K	J	1/10W	
R459			RK73FB2A471J	CHIP R	470	J	1/10W	
R460			RK73FB2A220J	CHIP R	22	J	1/10W	
R461			RK73FB2A102J	CHIP R	1.0K	J	1/10W	
R462			RK73FB2A101J	CHIP R	100	J	1/10W	
R463,464			RK73FB2A151J	CHIP R	150	J	1/10W	
R465,466			RK73FB2A471J	CHIP R	470	J	1/10W	
R467-470			RK73FB2A330J	CHIP R	33	J	1/10W	
R471			RK73FB2A102J	CHIP R	1.0K	J	1/10W	
R472			RK73FB2A104J	CHIP R	100K	J	1/10W	
R473			RK73FB2A473J	CHIP R	47K	J	1/10W	
R474			RK73FB2A104J	CHIP R	100K	J	1/10W	
R475			RK73FB2A473J	CHIP R	47K	J	1/10W	
R476			RK73FB2A472J	CHIP R	4.7K	J	1/10W	
R480			RK73FB2A470J	CHIP R	47	J	1/10W	
R481			RK73FB2A471J	CHIP R	470	J	1/10W	
R482			RK73FB2A330J	CHIP R	33	J	1/10W	
R483			RK73FB2A221J	CHIP R	220	J	1/10W	
R484			RK73FB2A223J	CHIP R	22K	J	1/10W	
R485			RK73FB2A822J	CHIP R	8.2K	J	1/10W	
R486			RK73FB2A560J	CHIP R	56	J	1/10W	
R487-489			RK73FB2A223J	CHIP R	22K	J	1/10W	
R490			RK73FB2A681J	CHIP R	680	J	1/10W	
R491,492			RK73FB2A471J	CHIP R	470	J	1/10W	
R501			RK73FB2A101J	CHIP R	100	J	1/10W	
R502			RK73FB2A331J	CHIP R	330	J	1/10W	
R503			RK73FB2A681J	CHIP R	680	J	1/10W	
R504			RK73FB2A331J	CHIP R	330	J	1/10W	
R505,506			RK73FB2A6R8J	CHIP R	6.8	J	1/10W	
R507			RK73FB2A681J	CHIP R	680	J	1/10W	
R508,509			R92-0696-05	CHIP R	33	J	1/4W	
R510			RK73FB2A331J	CHIP R	330	J	1/10W	

Ref. No.	Address	New parts	Parts No.	Description				Destination
R511			RK73FB2A151J	CHIP R	150	J	1/10W	
R512,513			R92-1318-05	CHIP R	100	J	1W	
R514-517			RS14DB3A5R6J	FL-PROOF RS	5.6	J	1W	
R518,519			RS14DB3A150J	FL-PROOF RS	15	J	1W	
R520			RK73FB2A561J	CHIP R	560	J	1/10W	
R521,522			RS14DB3A5R6J	FL-PROOF RS	5.6	J	1W	
R530		*	R92-2543-05	FIXED RESISTOR	6.8		1/2W	
R601			RK73FB2A472J	CHIP R	4.7K	J	1/10W	
R701			RK73FB2A103J	CHIP R	10K	J	1/10W	
R702			RK73FB2A101J	CHIP R	100	J	1/10W	
R703-705			RK73FB2A562J	CHIP R	5.6K	J	1/10W	
R706			RK73FB2A472J	CHIP R	4.7K	J	1/10W	
R707			RK73FB2A821J	CHIP R	820	J	1/10W	
R708			RK73FB2A272J	CHIP R	2.7K	J	1/10W	
R709			RK73FB2A333J	CHIP R	33K	J	1/10W	
R710			R92-1282-05	CHIP R	10	J	1W	
R712			R92-1316-05	CHIP R	39	J	1W	
R713			RK73FB2A471J	CHIP R	470	J	1/10W	
R714			RK73FB2A153J	CHIP R	15K	J	1/10W	
VR1			R12-6730-05	TRIMMING POT.	220			
VR501,502			R12-6734-05	TRIMMING POT.	1K			
W301			R92-0150-05	JUMPER REST	0 OHM		(ANT1)	
W303			R92-0150-05	JUMPER REST	0 OHM		(ANT2)	
K1-14			S51-1420-05	RELAY				
K301			S51-2417-05	RELAY				
K302			S51-1429-05	RELAY				
K601			S51-2423-05	RELAY				
D1,2			1SS101	DIODE				
D3			RLZJ5.1B	ZENER DIODE				
D4-10			LFB01	DIODE				
D11			DAP202K	DIODE				
D301,302			DSA301LA	DIODE				
D303,304			LFB01	DIODE				
D401			1SS226	DIODE				
D402		*	RD9.1M(B2)	ZENER DIODE				
D450			DAN235K	DIODE				
D451-456			1SV128	DIODE				
D457			DAN235K	DIODE				
D501			MA27T-B	DIODE				
D502,503			SV03YS	DIODE				
D504			SG-5L(R)	DIODE				
D601			LFB01	DIODE				
D701			DAN202K	DIODE				
D702			LFB01	DIODE				
IC1			TC9174F	IC (CMOS I/O EXTENSION)				
IC402			UPC7805H	IC (VOLTAGE REGULATOR/ +5V)				
IC601,602			UPC7808H	IC (VOLTAGE REGULATOR/ +8V)				
IC701			NJM2904M	IC (OP AMP X2)				
Q1-4			FMA7	TRANSISTOR				
Q5			DTC114EK	DIGITAL TRANSISTOR				
Q6			FMC2	TRANSISTOR				
Q10-16			DTB143EK	DIGITAL TRANSISTOR				
Q401			2SA1162(Y)	TRANSISTOR				
Q402,403			2SC2712(Y)	TRANSISTOR				
Q404			2SD1624(S)	TRANSISTOR				
Q405			2SD1406(Y)	TRANSISTOR				
Q460,461			3SK131(M)	FET				
Q470,471			3SK131(M)	FET				

PARTS LIST

FINAL UNIT (X45-351X-XX)
AT UNIT (X53-3340-02)

Ref. No.	Address	New parts	Parts No.	Description	Destination
Q472			2SC2712(Y)	TRANSISTOR	
Q475			3SK131(M)	FET	
Q501			2SC1971	TRANSISTOR	
Q502,503			2SC3133	TRANSISTOR	
Q504			2SD1406(Y)	TRANSISTOR	
Q505,506			2SC2879	TRANSISTOR	
Q507			2SD1406(Y)	TRANSISTOR	
Q601			DTC143TK	DIGITAL TRANSISTOR	
Q701			DTC114TK	DIGITAL TRANSISTOR	
Q702,703			DTD114EK	DIGITAL TRANSISTOR	
TH452			157-502-53002	THERMISTOR 5K	
TH701			5TP-41S	THERMISTOR	
AT UNIT (X53-3340-02)					
C1			CC45FSL2H330J	CERAMIC 33PF J	
C2-8			CK73FB1E103K	CHIP C 0.010UF K	
C9,10			CK73FB1H102K	CHIP C 1000PF K	
C11			CK73FB1E103K	CHIP C 0.010UF K	
C12			CE04EW1C470M	ELECTRO 47UF 16WV	
C13-15			CK73FB1E103K	CHIP C 0.010UF K	
C16			CK73EF1E474Z	CHIP C 0.47UF Z	
C17-19			CK73FB1E103K	CHIP C 0.010UF K	
C20			CE04EW1C101M	ELECTRO 100UF 16WV	
C21-23			CK73FB1E103K	CHIP C 0.010UF K	
C24			CK73EF1E474Z	CHIP C 0.47UF Z	
C25			CK73FB1E103K	CHIP C 0.010UF K	
C26			CE04EW1C101M	ELECTRO 100UF 16WV	
C27-37			CK73FB1E103K	CHIP C 0.010UF K	
C38			CK73FB1H103K	CHIP C 0.010UF K	
C101-103			CK73FB1H103K	CHIP C 0.010UF K	
C105-108			CK73FB1H103K	CHIP C 0.010UF K	
TC1			C05-0031-15	TRIMMER CAPACITOR 10PF	
VC1,2	2L		C02-0023-05	VARIABLE CAPACITOR 300PF	
A5	3L		D40-0633-15	GEAR ASSY	
CN1,2			E04-0157-05	RF COAXIAL CABLE SOCKET	
CN3			E40-3239-05	PIN CONNECTOR (4P)	
CN4			E40-3240-05	PIN CONNECTOR (5P)	
CN5			E40-3238-05	PIN CONNECTOR (3P)	
CN6			E40-3237-05	PIN CONNECTOR (2P)	
CN7			E40-5068-05	PIN CONNECTOR (11P)	
CN101			E40-5066-05	PIN CONNECTOR (9P)	
–			F20-1081-04	INSULATING SHEET	
A1	2M		F11-1142-22	SHIELDING CASE	
A2	2M		F10-1401-23	SHIELDING PLATE	
A3	1M		F11-1143-14	SHIELDING COVER	
A4	2M		F11-1144-14	SHIELDING COVER	
A6	1M	*	F10-2192-04	SHIELDING COVER	
–			J61-0307-05	BAND	
L1			L39-0496-05	COIL	
L2			L39-0415-25	COIL	
L3-6			L40-1011-13	SMALL FIXED INDUCTOR	
L7-11			L40-1011-14	SMALL FIXED INDUCTOR	
L12-14			L40-1011-13	SMALL FIXED INDUCTOR	
L101-103			L40-1011-14	SMALL FIXED INDUCTOR	

Ref. No.	Address	New parts	Parts No.	Description	Destination
L105-108			L40-1011-14	SMALL FIXED INDUCTOR	
L109			L34-1276-15	COIL	
L110			L39-0479-05	COIL	
L111			L39-0495-05	COIL	
L112			L39-0494-15	COIL	
T110-112			L92-0117-05	TROIDAL CORE	
K	1M,2M		N87-3006-46	BRAZIER HEAD TAPTITE SCREW	
S	1M,2M		N88-3006-46	FLAT HEAD TAPTITE SCREW	
R1,2			RD14BB2E101J	RD 100 J 1/4W	
R3			RK73FB2A102J	CHIP R 1.0K J 1/10W	
R4			RD14BB2E560J	RD 56 J 1/4W	
R5,6			RK73FB2A181J	CHIP R 180 J 1/10W	
R7-10			RK73FB2A103J	CHIP R 10K J 1/10W	
R11			RK73FB2A563J	CHIP R 56K J 1/10W	
R12			RK73FB2A121J	CHIP R 120 J 1/10W	
R13			RK73FB2A101J	CHIP R 100 J 1/10W	
R14			RK73FB2A563J	CHIP R 56K J 1/10W	
R15			RK73FB2A121J	CHIP R 120 J 1/10W	
R16			RK73FB2A101J	CHIP R 100 J 1/10W	
R17			RK73FB2A330J	CHIP R 33 J 1/10W	
R18			RK73FB2A103J	CHIP R 10K J 1/10W	
R19			RK73FB2A330J	CHIP R 33 J 1/10W	
R20-23			RK73FB2A103J	CHIP R 10K J 1/10W	
R24,25			RD14BB2E100J	RD 10 J 1/4W	
R26-30			RK73FB2A103J	CHIP R 10K J 1/10W	
R31			RK73FB2A472J	CHIP R 4.7K J 1/10W	
R32			RK73FB2A103J	CHIP R 10K J 1/10W	
R33			RD14BB2E101J	RD 100 J 1/4W	
R34			RK73FB2A472J	CHIP R 4.7K J 1/10W	
VR101,102	3L		R01-3435-05	POTENTIOMETER 10K	
W12-17			R92-0679-05	CHIP R 0 OHM	
W18-28			R92-0670-05	CHIP R 0 OHM	
W29-31			R92-0679-05	CHIP R 0 OHM	
W32			R92-0670-05	CHIP R 0 OHM	
W34			R92-0670-05	CHIP R 0 OHM	
W35,36			R92-0679-05	CHIP R 0 OHM	
W37			R92-0670-05	CHIP R 0 OHM	
W40	2B	*	E33-1984-05	PROCESSED WIRE KIT (to FIL:CN4)	
W40	2B	*	E33-1984-05	PROCESSED WIRE KIT (to CONT:CN4)	
W40	2B	*	E33-1984-05	PROCESSED WIRE KIT (to RL:AT1)	
W40	2B	*	E33-1984-05	PROCESSED WIRE KIT (to RL:AT2)	
K1			S51-2407-05	RELAY	
K101-103			S76-0401-05	RELAY	
K105-108			S76-0401-05	RELAY	
M1,2	3L		T42-0453-05	DC MOTOR	
D1,2			1SS101	DIODE	
D3-8			1SS226	DIODE	
D10			1S1555	DIODE	
D101-103			1S1555	DIODE	
D105-108			1S1555	DIODE	
D109,110			RLS73	DIODE	
IC1			SN74S74N	IC (ONE SHOT MULTI)	
IC2,3			TC4066BP	IC (ANALOG/ DIGITAL SW)	
IC4,5			BA6109U2	IC (MOTOR DRIVER)	
IC6			NJM2903S	IC (DUAL COMPALATOR)	
IC7			MC78L05M	IC (VOLTAGE REGULATOR/ +5V)	

PARTS LSIT

AT UNIT (X53-3340-02)
CONTROL UNIT (X53-356X-XX)

Ref. No.	Address	New parts	Parts No.	Description			Destination
Q1,2			2SC2714(Y)	TRANSISTOR			
Q3			DTC114EK	DIGITAL TRANSISTOR			
Q4			2SA1204(Y)	TRANSISTOR			
Q5			DTC114EK	DIGITAL TRANSISTOR			
CONTROL UNIT (X53-356X-XX) 0-11 : K,P 0-21 : M 0-22 : M2 0-71 : X 2-71 : E 2-72 : E2 2-73 : E3 2-74 : E9							
C1,2			CK73GB1H102K	CHIP C	1000PF	K	
C3			C92-0044-05	CHIP-ELE	47UF	10WV	
C4			CK73GB1H102K	CHIP C	1000PF	K	
C5			C92-0032-05	CHIP-ELE	4.7UF	25WV	
C6,7			CK73GF1E104Z	CHIP C	0.10UF	Z	
C8			C92-0037-05	CHIP-ELE	10UF	16WV	
C9			C92-0032-05	CHIP-ELE	4.7UF	25WV	
C10,11			CK73GF1E104Z	CHIP C	0.10UF	Z	
C12			C92-0037-05	CHIP-ELE	10UF	16WV	
C13			C92-0032-05	CHIP-ELE	4.7UF	25WV	
C14,15			CK73GF1E104Z	CHIP C	0.10UF	Z	
C16			C92-0037-05	CHIP-ELE	10UF	16WV	
C17-41			CK73GB1H102K	CHIP C	1000PF	K	
C42			CK73GB1H103K	CHIP C	0.010UF	K	
C43,44			CK73GB1H102K	CHIP C	1000PF	K	
C45			C92-0044-05	CHIP-ELE	47UF	10WV	
C46,47			CK73GB1H103K	CHIP C	0.010UF	K	
C48,49			CC73GCH1H330J	CHIP C	33PF	J	
C50-54			CK73GB1H103K	CHIP C	0.010UF	K	
C55			C92-0044-05	CHIP-ELE	47UF	10WV	
C56,57			CK73GF1E104Z	CHIP C	0.10UF	Z	
C58			CK73GB1H103K	CHIP C	0.010UF	K	
C59			C92-0044-05	CHIP-ELE	47UF	10WV	
C60			CK73GB1H103K	CHIP C	0.010UF	K	
C61			C92-0044-05	CHIP-ELE	47UF	10WV	
C62-77			CC73GCH1H101J	CHIP C	100PF	J	
C78-80			CK73GB1H103K	CHIP C	0.010UF	K	
C81-88			CC73GCH1H101J	CHIP C	100PF	J	
C89-93			CK73GB1H103K	CHIP C	0.010UF	K	
C94-96			C92-0037-05	CHIP-ELE	10UF	16WV	
C97			C92-0044-05	CHIP-ELE	47UF	10WV	
C98-102			CK73GB1H103K	CHIP C	0.010UF	K	
C103,104			CC73GCH1H220J	CHIP C	22PF	J	
C105-107			CK73GB1H103K	CHIP C	0.010UF	K	
C108			C92-0044-05	CHIP-ELE	47UF	10WV	
C109,110			CK73GB1H103K	CHIP C	0.010UF	K	
C111-113			C92-0023-05	CHIP-ELE	1.0UF	50WV	
C114			CK73GB1H103K	CHIP C	0.010UF	K	
C115			C92-0023-05	CHIP-ELE	1.0UF	50WV	
C116,117			CK73GB1H103K	CHIP C	0.010UF	K	
C118-124			CK73GB1H102K	CHIP C	1000PF	K	
C125,126			CK73GB1H103K	CHIP C	0.010UF	K	
C127-141			CC73GCH1H101J	CHIP C	100PF	J	
C142-147			CK73GB1H102K	CHIP C	1000PF	K	
C148-150			CC73GCH1H101J	CHIP C	100PF	J	
C152			CC73GCH1H101J	CHIP C	100PF	J	
C153-175			CK73GB1H102K	CHIP C	1000PF	K	
C177-183			CK73GB1H102K	CHIP C	1000PF	K	
C184-187			CK73GB1H103K	CHIP C	0.010UF	K	
C188-223			CK73GB1H102K	CHIP C	1000PF	K	
C224,225			CC73GSL1H471J	CHIP C	470PF	J	

Ref. No.	Address	New parts	Parts No.	Description				Destination
C226,227			CK73GB1H103K	CHIP C	0.010UF	K		
C228,229			CK73GB1H102K	CHIP C	1000PF	K		
C230			CK73GB1H103K	CHIP C	0.010UF	K		
C231-233			CK73GB1H102K	CHIP C	1000PF	K		
C501-509			CK73GB1H103K	CHIP C	0.010UF	K		
C511-521			CK73GB1H103K	CHIP C	0.010UF	K		
C522			CK73GB1H102K	CHIP C	1000PF	K		
C523			CK73GF1E104Z	CHIP C	0.10UF	Z		
C601-604			CK73GB1H103K	CHIP C	0.010UF	K		
C605			CK73GF1E104Z	CHIP C	0.10UF	Z		
C606			CK73GB1H102K	CHIP C	1000PF	K		
401	1D		E23-0623-04	EARTH LUG				
CN1,2		*	E40-5744-05	FLAT CABLE CONNECTOR (20P)				
CN3			E40-3239-05	PIN CONNECTOR (4P)				
CN4		*	E40-5763-05	PIN CONNECTOR (12P)				
CN5		*	E40-5744-05	FLAT CABLE CONNECTOR (20P)				
CN6			E40-5761-05	FLAT CABLE CONNECTOR (26P)				
CN7		*	E40-5742-05	FLAT CABLE CONNECTOR (13P)				
CN8		*	E40-5739-05	FLAT CABLE CONNECTOR (10P)				
CN9,10		*	E40-5740-05	FLAT CABLE CONNECTOR (20P)				
CN11		*	E40-5744-05	FLAT CABLE CONNECTOR (20P)				
CN12			E02-2015-05	SOCKET FOR IC				
CN501		*	E40-5740-05	FLAT CABLE CONNECTOR (20P)				
CN601			E40-3251-05	PIN CONNECTOR (7P)				
J601			E06-0858-15	CYLINDRICAL RECEPTACLE (8P MIC)				
A1	3G	*	F01-1007-04	HEAT SINK				
402	3G		G02-0574-04	FLAT SPRING				
403	2A	*	J19-1570-05	HOLDER (BATT)				
L1-3			L40-4705-48	SMALL FIXED INDUCTOR (47UH)				
L4,5			L40-1292-18	SMALL FIXED INDUCTOR				
L6,7			L40-4705-48	SMALL FIXED INDUCTOR (47UH)				
L8			L40-1292-18	SMALL FIXED INDUCTOR				
L11-25			L40-4705-48	SMALL FIXED INDUCTOR (47UH)				
L26,27			L40-1005-48	SMALL FIXED INDUCTOR (10UH)				
L28			L40-4705-48	SMALL FIXED INDUCTOR (47UH)				
X1		*	L77-1589-05	CRYSTAL RESONATOR (11.0592MHZ)				
X2			L78-0325-05	RESONATOR (2.0MHZ)				
G	3G		N32-2606-46	FLAT HEAD MACHIN SCREW				
R1,2			RK73GB1J101J	CHIP R	100	J	1/16W	
R3,4			RK73GB1J102J	CHIP R	1.0K	J	1/16W	
R5			RK73GB1J101J	CHIP R	100	J	1/16W	
R6			RK73GB1J473J	CHIP R	47K	J	1/16W	
R7-9			RK73GB1J102J	CHIP R	1.0K	J	1/16W	
R10-28			RK73GB1J101J	CHIP R	100	J	1/16W	
R29			RK73GB1J105J	CHIP R	1.0M	J	1/16W	
R30-37			RK73GB1J101J	CHIP R	100	J	1/16W	
R39			RK73GB1J102J	CHIP R	1.0K	J	1/16W	
R40			RK73GB1J471J	CHIP R	470	J	1/16W	
R41			RK73GB1J103J	CHIP R	10K	J	1/16W	
R42			RK73GB1J222J	CHIP R	2.2K	J	1/16W	
R43,44			RK73GB1J104J	CHIP R	100K	J	1/16W	
R45			RK73GB1J472J	CHIP R	4.7K	J	1/16W	
R46			RK73GB1J102J	CHIP R	1.0K	J	1/16W	
R47			RK73GB1J473J	CHIP R	47K	J	1/16W	
R48			RK73GB1J102J	CHIP R	1.0K	J	1/16W	X

PARTS LIST

CONTROL UNIT (X53-356X-XX)

Ref. No.	Address	New parts	Parts No.	Description	Destination
R49			RK73GB1J473J	CHIP R 47K J 1/16W	
R51			RK73GB1J473J	CHIP R 47K J 1/16W	
R52			RK73GB1J103J	CHIP R 10K J 1/16W	
R53			RK73GB1J102J	CHIP R 1.0K J 1/16W	E3E9M
R54			RK73GB1J473J	CHIP R 47K J 1/16W	
R55,56			RK73GB1J103J	CHIP R 10K J 1/16W	
R57			RK73GB1J102J	CHIP R 1.0K J 1/16W	EE2E3E9
R58			RK73GB1J473J	CHIP R 47K J 1/16W	
R59-68			RK73GB1J103J	CHIP R 10K J 1/16W	
R69			RK73GB1J102J	CHIP R 1.0K J 1/16W	E2MM2
R70			RK73GB1J473J	CHIP R 47K J 1/16W	
R71,72			RK73GB1J103J	CHIP R 10K J 1/16W	
R73			RK73GB1J102J	CHIP R 1.0K J 1/16W	E
R74			RK73GB1J473J	CHIP R 47K J 1/16W	
R75-85			RK73GB1J103J	CHIP R 10K J 1/16W	
R86,87			RK73GB1J472J	CHIP R 4.7K J 1/16W	
R88			RK73GB1J153J	CHIP R 15K J 1/16W	
R89			RK73GB1J334J	CHIP R 330K J 1/16W	
R90-92			RK73GB1J153J	CHIP R 15K J 1/16W	
R93			RK73GB1J103J	CHIP R 10K J 1/16W	
R94,95			RK73GB1J153J	CHIP R 15K J 1/16W	
R96			RK73GB1J105J	CHIP R 1.0M J 1/16W	
R97			RK73GB1J102J	CHIP R 1.0K J 1/16W	
R98			RK73GB1J473J	CHIP R 47K J 1/16W	
R99			RK73GB1J102J	CHIP R 1.0K J 1/16W	
R100-105			RK73GB1J105J	CHIP R 1.0M J 1/16W	
R107			RK73GB1J105J	CHIP R 1.0M J 1/16W	
R108-119			RK73GB1J104J	CHIP R 100K J 1/16W	
R120-130			RK73GB1J101J	CHIP R 100 J 1/16W	
R131			RK73GB1J102J	CHIP R 1.0K J 1/16W	
R132,133			RK73GB1J103J	CHIP R 10K J 1/16W	
R134-137			RK73GB1J101J	CHIP R 100 J 1/16W	
R138-140			RK73GB1J101J	CHIP R 100 J 1/16W	
R141-144			RK73GB1J102J	CHIP R 1.0K J 1/16W	
R145			RK73GB1J223J	CHIP R 22K J 1/16W	
R146,147			RK73GB1J473J	CHIP R 47K J 1/16W	
R148-150			RK73GB1J101J	CHIP R 100 J 1/16W	
R152-169			RK73GB1J101J	CHIP R 100 J 1/16W	
R170			RK73GB1J474J	CHIP R 470K J 1/16W	
R171			RK73GB1J102J	CHIP R 1.0K J 1/16W	
R172-177			RK73GB1J101J	CHIP R 100 J 1/16W	
R179-201			RK73GB1J101J	CHIP R 100 J 1/16W	
R202			RK73GB1J473J	CHIP R 47K J 1/16W	
R203-214			RK73GB1J101J	CHIP R 100 J 1/16W	
R215			RK73GB1J473J	CHIP R 47K J 1/16W	
R216-222			RK73GB1J101J	CHIP R 100 J 1/16W	
R223			RK73GB1J333J	CHIP R 33K J 1/16W	
R224			RK73GB1J101J	CHIP R 100 J 1/16W	
R225			RK73GB1J473J	CHIP R 47K J 1/16W	
R226			RK73GB1J104J	CHIP R 100K J 1/16W	
R227-234			RK73GB1J103J	CHIP R 10K J 1/16W	
R235-237			RK73GB1J102J	CHIP R 1.0K J 1/16W	
R238-240			RK73GB1J101J	CHIP R 100 J 1/16W	
R241			RK73GB1J473J	CHIP R 47K J 1/16W	
R242,243			RK73GB1J102J	CHIP R 1.0K J 1/16W	
R244			RK73GB1J101J	CHIP R 100 J 1/16W	KPMXE
R244			RK73GB1J101J	CHIP R 100 J 1/16W	E2E3E9
R245			RK73GB1J473J	CHIP R 47K J 1/16W	
R501-504			RK73GB1J473J	CHIP R 47K J 1/16W	

Ref. No.	Address	New parts	Parts No.	Description	Destination
R505			RK73GB1J391J	CHIP R 390 J 1/16W	
R506			RK73GB1J271J	CHIP R 270 J 1/16W	
R507			RK73GB1J473J	CHIP R 47K J 1/16W	
R508			RK73GB1J391J	CHIP R 390 J 1/16W	
R509			RK73GB1J271J	CHIP R 270 J 1/16W	
R510			RK73GB1J391J	CHIP R 390 J 1/16W	
R511			RK73GB1J271J	CHIP R 270 J 1/16W	
R512			RK73GB1J391J	CHIP R 390 J 1/16W	
R513			RK73GB1J271J	CHIP R 270 J 1/16W	
R514			RK73GB1J473J	CHIP R 47K J 1/16W	
R515			RK73GB1J391J	CHIP R 390 J 1/16W	
R516			RK73GB1J271J	CHIP R 270 J 1/16W	
R517			RK73GB1J391J	CHIP R 390 J 1/16W	
R518			RK73GB1J271J	CHIP R 270 J 1/16W	
R519			RK73GB1J391J	CHIP R 390 J 1/16W	
R520			RK73GB1J271J	CHIP R 270 J 1/16W	
R521-523			RK73GB1J473J	CHIP R 47K J 1/16W	
R524			RK73GB1J102J	CHIP R 1.0K J 1/16W	
R525			RK73GB1J473J	CHIP R 47K J 1/16W	
R526-527			RK73GB1J101J	CHIP R 100 J 1/16W	
R528			RK73GB1J391J	CHIP R 390 J 1/16W	
R529			RK73GB1J271J	CHIP R 270 J 1/16W	
R530			RK73GB1J391J	CHIP R 390 J 1/16W	
R531			RK73GB1J271J	CHIP R 270 J 1/16W	
R532			RK73GB1J391J	CHIP R 390 J 1/16W	
R533			RK73GB1J271J	CHIP R 270 J 1/16W	
R534			RK73GB1J391J	CHIP R 390 J 1/16W	
R535			RK73GB1J271J	CHIP R 270 J 1/16W	
R536-539			RK73GB1J101J	CHIP R 100 J 1/16W	
R540			RK73GB1J473J	CHIP R 47K J 1/16W	
R541,542			RK73GB1J101J	CHIP R 100 J 1/16W	
R543-546			RK73GB1J473J	CHIP R 47K J 1/16W	
R547,548			RK73GB1J103J	CHIP R 10K J 1/16W	
R549-555			RK73GB1J473J	CHIP R 47K J 1/16W	
R556			RK73GB1J103J	CHIP R 10K J 1/16W	
S1			S62-0412-05	SLIDE SWITCH	
S501-545		*	S70-0439-05	TACT SWITCH	
S546-551		*	S70-0439-05	TACT SWITCH	
D1-3			1SS355	DIODE	
D4		*	RD7.5M(B3)	ZENER DIODE	
D5-12			1SS355	DIODE	
D501			B30-2036-05	LED (RED)	
D502		*	B30-2146-05	LED (ORANGE)	
D510-519		*	B30-2146-05	LED (ORANGE)	
IC1,2			UPC7805H	IC (VOLTAGE REGULATOR/ +5V)	
IC3			TA78L08F	IC (VOLTAGE REGULATOR)	
IC4			AT2402N10SI2.7	IC (2kbit SERIAL EEPROMM)	
IC5			MB3780A	IC (BATTERY BACKUP)	
IC6		*	M37702S4BFP	IC	
IC7			TC7S04F	IC (2CH NAND GATE)	
IC8			LC3564QMF-10	IC	
IC9			TC4052BF	IC (4CH MPX/DE-MPX)	
IC10			TC7S04F	IC (2CH NAND GATE)	
IC11		*	TC74VHC32F	IC	
IC12		*	27C512RJLVC	IC	
IC13			TC4052BF	IC (4CH MPX/DE-MPX)	
IC14		*	TC74VHC08F	IC	
IC15		*	TC74VHC245F	IC	

TS-870S

PARTS LSIT

CONTROL UNIT (X53-356X-XX)
TX-RX UNIT (X57-4620-00)

Ref. No.	Address	New parts	Parts No.	Description	Destination
IC16			CXD1095Q	IC (I/O EXPANDER)	
IC17,18		*	TC74VHC138F	IC	
IC19		*	TC74VHC573F	IC	
IC20,21			LZ92K371	IC (ENCODER PROCESSOR)	
IC22,23			CXD1095Q	IC (I/O EXPANDER)	
IC24		*	68HC05G2419553	IC	
IC25,26			TC4584BF	IC (BUFF)	
IC27		*	ADM232LAR	IC	
IC28			NJM2904M	IC (OP AMP X2)	
IC29			TC7S32F	IC (2CH NAND GATE)	
IC501-504			UPD6345GS	IC	
Q1			DTA143EK	DIGITAL TRANSISTOR	
Q2			DTC143EK	DIGITAL TRANSISTOR	
Q3,4			DTC114EK	DIGITAL TRANSISTOR	
Q5			DTC143EK	DIGITAL TRANSISTOR	
Q6-11			DTC114EK	DIGITAL TRANSISTOR	
Q12,13			DTA143EK	DIGITAL TRANSISTOR	
Q14-22			DTC143EK	DIGITAL TRANSISTOR	
Q23,24			DTA143EK	DIGITAL TRANSISTOR	
Q27,28			DTC114EK	DIGITAL TRANSISTOR	
Q29-31			DTC143TK	DIGITAL TRANSISTOR	
Q33			DTC143EK	DIGITAL TRANSISTOR	
Q501,502			DTC114EK	DIGITAL TRANSISTOR	

TX-RX UNIT (X57-4620-00)

C1			C90-2045-05	ELECTRO	2.2UF	25WV	
C2,3			CK73FF1E104Z	CHIP C	0.10UF	Z	
C4,5			CC73FCH1H330J	CHIP C	33PF	J	
C6			C90-2045-05	ELECTRO	2.2UF	25WV	
C7,8			CK73FF1E104Z	CHIP C	0.10UF	Z	
C9-14			CC73FCH1H330J	CHIP C	33PF	J	
C15			CC73FSL1H152J	CHIP C	1500PF	J	
C16			CC73FCH1H101J	CHIP C	100PF	J	
C17			CC73FSL1H152J	CHIP C	1500PF	J	
C18			CC73FCH1H101J	CHIP C	100PF	J	
C19-22			CK73FF1E104Z	CHIP C	0.10UF	Z	
C23			C90-2045-05	ELECTRO	2.2UF	25WV	
C24			CK73FB1H223K	CHIP C	0.022UF	K	
C25			CK73FF1E104Z	CHIP C	0.10UF	Z	
C26,27			CK73FB1H223K	CHIP C	0.022UF	K	
C28			C90-2045-05	ELECTRO	2.2UF	25WV	
C29			CK73FF1E104Z	CHIP C	0.10UF	Z	
C30			CK73GB1H102K	CHIP C	1000PF	K	
C31			CK73FB1H471K	CHIP C	470PF	K	
C32			CK73FF1E104Z	CHIP C	0.10UF	Z	
C33			CK73GB1H102K	CHIP C	1000PF	K	
C34			C90-2045-05	ELECTRO	2.2UF	25WV	
C36			CC73GCH1H330J	CHIP C	33PF	J	
C37			CK73GB1H102K	CHIP C	1000PF	K	
C38			CK73GB1H103K	CHIP C	0.010UF	K	
C39,40			CK73FB1H102K	CHIP C	1000PF	K	
C41			C90-2045-05	ELECTRO	2.2UF	25WV	
C42			CK73FB1H103K	CHIP C	0.010UF	K	
C44			CK73GB1H102K	CHIP C	1000PF	K	
C45			CC73FCH1H121J	CHIP C	120PF	J	
C46			CK73GB1H102K	CHIP C	1000PF	K	
C50			CK73GB1H102K	CHIP C	1000PF	K	

Ref. No.	Address	New parts	Parts No.	Description			Destination
C52			CE04EW1C470M	ELECTRO	47UF	16WV	
C53			CK73GB1E223K	CHIP C	0.022UF	K	
C54			CQ92M1H154K	MYLAR	0.15UF	K	
C55			CK73FB1H102K	CHIP C	1000PF	K	
C56			CE04EW1C101M	ELECTRO	100UF	16WV	
C57			CC73ECH1H202J	CHIP C	2000PF	J	
C58			CK73FB1H103K	CHIP C	0.010UF	K	
C59			CC73GCH1H680J	CHIP C	68PF	J	
C60			CC73GCH1H180J	CHIP C	18PF	J	
C61			CC73GCH1H060D	CHIP C	6.0PF	D	
C62			CC73GCH1H470J	CHIP C	47PF	J	
C63			CK73GB1H103K	CHIP C	0.010UF	K	
C64			CE04EW1C101M	ELECTRO	100UF	16WV	
C65,66			CK73GB1H102K	CHIP C	1000PF	K	
C67			CE04EW1C470M	ELECTRO	47UF	16WV	
C68,69			CK73GB1H102K	CHIP C	1000PF	K	
C100			CE04EW1C100M	ELECTRO	10UF	16WV	
C101			CK73FF1E104Z	CHIP C	0.10UF	Z	
C103			CE04EW1H010M	ELECTRO	1.0UF	50WV	
C104			CE04EW1C100M	ELECTRO	10UF	16WV	
C105			CK73GB1H102K	CHIP C	1000PF	K	
C106			CC73FCH1H102J	CHIP C	1000PF	J	
C107			CK73FF1E104Z	CHIP C	0.10UF	Z	
C108			CE04EW1C100M	ELECTRO	10UF	16WV	
C109			CK73FF1E104Z	CHIP C	0.10UF	Z	
C112			CC73FCH1H102J	CHIP C	1000PF	J	
C113,114			CQ92FM1H223K	MYLAR	0.022UF	K	
C116			CC73FCH1H102J	CHIP C	1000PF	J	
C118,119			CC73GCH1H271J	CHIP C	270PF	J	
C120			CE04EW1C100M	ELECTRO	10UF	16WV	
C121			CE04EW1H010M	ELECTRO	1.0UF	50WV	
C122			CC73FSL1H152J	CHIP C	1500PF	J	
C123			CC73GCH1H101J	CHIP C	100PF	J	
C124			CC73GCH1H221J	CHIP C	220PF	J	
C125			CK73GB1E223K	CHIP C	0.022UF	K	
C126			CE04EW1C100M	ELECTRO	10UF	16WV	
C127			CK73GB1H103K	CHIP C	0.010UF	K	
C128			CC73FSL1H221J	CHIP C	220PF	J	
C129			CC73FCH1H101J	CHIP C	100PF	J	
C130			CE04EW1C100M	ELECTRO	10UF	16WV	
C131			CK73FF1E104Z	CHIP C	0.10UF	Z	
C132			CE04EW1C100M	ELECTRO	10UF	16WV	
C133			CC73GCH1H101J	CHIP C	100PF	J	
C134			CK73GB1E223K	CHIP C	0.022UF	K	
C135			CE04EW1C100M	ELECTRO	10UF	16WV	
C136			CK73GB1E223K	CHIP C	0.022UF	K	
C137			CC73FCH1H102J	CHIP C	1000PF	J	
C138			CC73GCH1H221J	CHIP C	220PF	J	
C139			CC73GCH1H271J	CHIP C	270PF	J	
C140,141			CK73GB1E223K	CHIP C	0.022UF	K	
C142			CE04EW1C100M	ELECTRO	10UF	16WV	
C143			CK73GB1E223K	CHIP C	0.022UF	K	
C144		*	CQ92FM1H683K	MYLAR	0.068UF	K	
C145			CK73FB1E104K	CHIP C	0.10UF	K	
C146,147			CC73FCH1H102J	CHIP C	1000PF	J	
C150			CK73GB1E223K	CHIP C	0.022UF	K	
C151			CE04EW1C100M	ELECTRO	10UF	16WV	
C152			CC73FCH1H102J	CHIP C	1000PF	J	
C153			CC73GCH1H271J	CHIP C	270PF	J	

PARTS LIST

TX-RX UNIT (X57-4620-00)

Ref. No.	Address	New parts	Parts No.	Description			Destination
C154			CK73GB1E223K	CHIP C	0.022UF	K	
C155			CE04EW1C100M	ELECTRO	10UF	16WV	
C156			CK73FF1E104Z	CHIP C	0.10UF	Z	
C157			CK73GB1E223K	CHIP C	0.022UF	K	
C158			C90-2045-05	ELECTRO	2.2UF	25WV	
C159,160			CK73FF1E104Z	CHIP C	0.10UF	Z	
C161			CK73GB1E223K	CHIP C	0.022UF	K	
C162			CE04EW1C100M	ELECTRO	10UF	16WV	
C163			CK73FF1E104Z	CHIP C	0.10UF	Z	
C164			CE04EW1C100M	ELECTRO	10UF	16WV	
C165			CK73FF1E104Z	CHIP C	0.10UF	Z	
C166,167			CE04EW1C100M	ELECTRO	10UF	16WV	
C168,169			CK73FF1E104Z	CHIP C	0.10UF	Z	
C170			CK73GB1H103K	CHIP C	0.010UF	K	
C171-176			CE04EW1C100M	ELECTRO	10UF	16WV	
C177			CQ92M1H103K	MYLAR	0.010UF	K	
C178,179			CC73FSL1H152J	CHIP C	1500PF	J	
C180,181			CC73ECH1H202J	CHIP C	2000PF	J	
C182			CC73GCH1H331J	CHIP C	330PF	J	
C183-185			CC73FSL1H152J	CHIP C	1500PF	J	
C186			CE04EW1C100M	ELECTRO	10UF	16WV	
C187			CC73GCH1H331J	CHIP C	330PF	J	
C188			CK73GB1H562K	CHIP C	5600PF	K	
C189			CE04EW1C100M	ELECTRO	10UF	16WV	
C190			CC73GCH1H331J	CHIP C	330PF	J	
C191,192			CE04NW1C100M	ELECTRO	10UF	16WV	
C193			CK73GB1H103K	CHIP C	0.010UF	K	
C194			CE04NW1C100M	ELECTRO	10UF	16WV	
C195			CE04EW1H010M	ELECTRO	1.0UF	50WV	
C196,197			CE04NW1C100M	ELECTRO	10UF	16WV	
C198			CE04EW1C100M	ELECTRO	10UF	16WV	
C199,200			CE04NW1C220M	ELECTRO	22UF	16WV	
C201,202			CK73GF1E104Z	CHIP C	0.10UF	Z	
C203,204			CE04NW1E4R7M	ELECTRO	4.7UF	25WV	
C205			CE04EW1C100M	ELECTRO	10UF	16WV	
C206,207			CK73GF1E104Z	CHIP C	0.10UF	Z	
C208			CK73GB1E223K	CHIP C	0.022UF	K	
C209,210			CE04NW1C100M	ELECTRO	10UF	16WV	
C212,213			CE04NW1H010M	ELECTRO	1.0UF	50WV	
C214			CK73GB1H472K	CHIP C	4700PF	K	
C215,216			CE04EW1C100M	ELECTRO	10UF	16WV	
C218,219			CK73EF1E474Z	CHIP C	0.47UF	Z	
C221,222			CK73FB1H102K	CHIP C	1000PF	K	
C223			CE04EW1C471M	ELECTRO	470UF	16WV	
C224			CE04EW1C100M	ELECTRO	10UF	16WV	
C225			CE04EW1C470M	ELECTRO	47UF	16WV	
C226			CE04EW1C101M	ELECTRO	100UF	16WV	
C227			CE04EW1C100M	ELECTRO	10UF	16WV	
C228			CE04EW1C101M	ELECTRO	100UF	16WV	
C229			CE04EW1C100M	ELECTRO	10UF	16WV	
C230			CE04EW1C471M	ELECTRO	470UF	16WV	
C231,232			CK73EF1E474Z	CHIP C	0.47UF	Z	
C233			CQ92M1H154K	MYLAR	0.15UF	K	
C235,236			CK73FB1H102K	CHIP C	1000PF	K	
C237			CE04EW1E471M	ELECTRO	470UF	25WV	
C240			CC73FSL1H152J	CHIP C	1500PF	J	
C241			CE04EW1H010M	ELECTRO	1.0UF	50WV	
C300,301			CC73FCH1H101J	CHIP C	100PF	J	
C302			CC73GCH1H101J	CHIP C	100PF	J	

Ref. No.	Address	New parts	Parts No.	Description			Destination
C303,304			CC73FCH1H101J	CHIP C	100PF	J	
C305			CC73GCH1H101J	CHIP C	100PF	J	
C306,307			CC73FCH1H101J	CHIP C	100PF	J	
C308			CC73GCH1H101J	CHIP C	100PF	J	
C309,310			CC73FCH1H101J	CHIP C	100PF	J	
C312,313			CC73FCH1H101J	CHIP C	100PF	J	
C314			CC73GCH1H101J	CHIP C	100PF	J	
C315			CC73FCH1H101J	CHIP C	100PF	J	
C316-320			CK73FB1H102K	CHIP C	1000PF	K	
C321			CC73FSL1H471J	CHIP C	470PF	J	
C326,327			CK73GB1H102K	CHIP C	1000PF	K	
C330-333			CK73FB1H102K	CHIP C	1000PF	K	
C334			CK73GB1E223K	CHIP C	0.022UF	K	
C335			CC73GCH1H331J	CHIP C	330PF	J	
C336-340			CK73GB1E223K	CHIP C	0.022UF	K	
C341			CK73FF1E104Z	CHIP C	0.10UF	Z	
C342			CC73FSL1H152J	CHIP C	1500PF	J	
C343			CK73FB1H562K	CHIP C	5600PF	K	
C344			CK73GB1H472K	CHIP C	4700PF	K	
C345			CK73GB1E223K	CHIP C	0.022UF	K	
C346-348			CC73FCH1H101J	CHIP C	100PF	J	
C349,350			CK73FF1E104Z	CHIP C	0.10UF	Z	
C351			CK73GB1E223K	CHIP C	0.022UF	K	
C355			CE04NW1C100M	ELECTRO	10UF	16WV	
C356			CE04EW1HR47M	ELECTRO	0.47UF	50WV	
C357			CE04EW1C100M	ELECTRO	10UF	16WV	
C358-361			CK73FB1H103K	CHIP C	0.010UF	K	
C363			CK73GB1H103K	CHIP C	0.010UF	K	
C364			C90-2045-05	ELECTRO	2.2UF	25WV	
C365-375			CK73FB1H471K	CHIP C	470PF	K	
C376			CK73GB1E223K	CHIP C	0.022UF	K	
C377-379			CK73FB1H471K	CHIP C	470PF	K	
C381,382			CK73FB1H103K	CHIP C	0.010UF	K	
C383			CK73GB1H102K	CHIP C	1000PF	K	
C384			CK73FB1H102K	CHIP C	1000PF	K	
C385			CK73GB1H103K	CHIP C	0.010UF	K	
C386			CK73FB1H103K	CHIP C	0.010UF	K	
C387			CK73GB1H103K	CHIP C	0.010UF	K	
C388			CK73FB1H471K	CHIP C	470PF	K	
C389,390			CK73GB1H471K	CHIP C	470PF	K	
C391-394			CK73FB1H103K	CHIP C	0.010UF	K	
C395			CK73GB1H103K	CHIP C	0.010UF	K	
C400			CC73FSL1H471J	CHIP C	470PF	J	
C401			CK73FB1H103K	CHIP C	0.010UF	K	
C402			C90-2167-05	ELECTRO	100UF	16WV	
CN1			E40-3239-05	PIN CONNECTOR (4P)			
CN3			E40-3239-05	PIN CONNECTOR (4P)			
CN4			E40-3242-05	PIN CONNECTOR (7P)			
CN5		*	E40-5747-05	PIN CONNECTOR (11P)			
CN6			E40-3243-05	PIN CONNECTOR (8P)			
CN7			E40-5736-05	FLAT CABLE CONNECTOR (26P)			
CN8		*	E40-5740-05	FLAT CABLE CONNECTOR (20P)			
CN9			E40-3240-05	PIN CONNECTOR (5P)			
CN10			E40-3238-05	PIN CONNECTOR (3P)			
CN11		*	E40-5741-05	FLAT CABLE CONNECTOR (8P)			
CN12			E40-3237-05	PIN CONNECTOR (2P)			
CN13			E04-0191-05	RF COAXIAL CABLE SOCKET			
CN14-16			E02-2015-05	SOCKET FOR IC			
CN17			E40-5067-05	PIN CONNECTOR (10P)			

PARTS LSIT

TX-RX UNIT (X57-4620-00)

Ref. No.	Address	New parts	Parts No.	Description	Destination
J1			E11-0455-05	PHONE JACK (3.5D)	
J2			E11-0431-05	PHONE JACK	
J4			E63-0401-05	PHONO JACK	
J5			E06-1352-05	DIN SOCKET	
J6			E11-0455-05	PHONE JACK (3.5D)	
J7		*	E58-0428-05	SUB PLUG (D) 9P	
W1		*	E37-0536-05	LEAD WIRE WITH MINIPIN PLUG	
A1	4G	*	F01-1005-04	HEAT SINK	
A2	4F		F11-1127-04	SHIELDING CASE	
A3,4	4G		G02-0574-04	FLAT SPRING	
A5	4G		G02-0719-04	FLAT SPRING	
CF1,2			L72-0374-05	CERAMIC FILTER (455KHZ)	
CF3			L72-0366-05	CERAMIC FILTER (455KHZ)	
L1			L40-2285-48	SMALL FIXED INDUCTOR (220NH)	
L2			L40-4785-48	SMALL FIXED INDUCTOR	
L3			L40-1011-15	SMALL FIXED INDUCTOR	
L4		*	L34-4397-05	COIL	
L5			L40-1011-15	SMALL FIXED INDUCTOR	
L8		*	L40-4711-15	SMALL FIXED INDUCTOR	
L9			L40-1011-15	SMALL FIXED INDUCTOR	
L10			L40-1092-12	SMALL FIXED INDUCTOR	
L11-17			L40-1011-15	SMALL FIXED INDUCTOR	
L18			L40-1001-15	SMALL FIXED INDUCTOR	
L19,20		*	L39-1245-05	COIL	
L21		*	L40-2711-33	SMALL FIXED INDUCTOR	
L22,23			L40-2201-12	SMALL FIXED INDUCTOR	
L24,25			L40-1092-12	SMALL FIXED INDUCTOR	
L26			L40-1001-15	SMALL FIXED INDUCTOR	
R1			RK73FB2A103J	CHIP R 10K J 1/10W	
R2,3			RK73GB1J103J	CHIP R 10K J 1/16W	
R4-6			RK73GB1J101J	CHIP R 100 J 1/16W	
R7			RK73FB2A103J	CHIP R 10K J 1/10W	
R8			RK73GB1J682J	CHIP R 6.8K J 1/16W	
R9			RK73GB1J222J	CHIP R 2.2K J 1/16W	
R10			RK73GB1J330J	CHIP R 33 J 1/16W	
R11			RK73GB1J183J	CHIP R 18K J 1/16W	
R12			RK73FB2A103J	CHIP R 10K J 1/10W	
R13			RK73GB1J101J	CHIP R 100 J 1/16W	
R16			RK73GB1J680J	CHIP R 68 J 1/16W	
R17,18			RK73FB2A222J	CHIP R 2.2K J 1/10W	
R19			RK73GB1J101J	CHIP R 100 J 1/16W	
R21-24			RK73FB2A103J	CHIP R 10K J 1/10W	
R50			RK73GB1J682J	CHIP R 6.8K J 1/16W	
R51			RK73FB2A104J	CHIP R 100K J 1/10W	
R52			RK73GB1J392J	CHIP R 3.9K J 1/16W	
R53			RK73GB1J221J	CHIP R 220 J 1/16W	
R54			RK73GB1J152J	CHIP R 1.5K J 1/16W	
R55,56			RK73GB1J103J	CHIP R 10K J 1/16W	
R57			RK73GB1J334J	CHIP R 330K J 1/16W	
R58			RK73GB1J470J	CHIP R 47 J 1/16W	
R59			RK73GB1J151J	CHIP R 150 J 1/16W	
R60			RK73GB1J152J	CHIP R 1.5K J 1/16W	
R61			RK73GB1J333J	CHIP R 33K J 1/16W	
R62			RK73GB1J223J	CHIP R 22K J 1/16W	
R63			RK73GB1J102J	CHIP R 1.0K J 1/16W	
R64,65			RK73GB1J470J	CHIP R 47 J 1/16W	
R66			RK73GB1J221J	CHIP R 220 J 1/16W	

Ref. No.	Address	New parts	Parts No.	Description	Destination
R100			RK73FB2A100J	CHIP R 10 J 1/10W	
R101			RK73GB1J472J	CHIP R 4.7K J 1/16W	
R103			RK73GB1J102J	CHIP R 1.0K J 1/16W	
R104			RK73GB1J472J	CHIP R 4.7K J 1/16W	
R105			RK73GB1J102J	CHIP R 1.0K J 1/16W	
R106			RK73GB1J154J	CHIP R 150K J 1/16W	
R109			RK73GB1J102J	CHIP R 1.0K J 1/16W	
R110			RK73GB1J223J	CHIP R 22K J 1/16W	
R111			RK73GB1J222J	CHIP R 2.2K J 1/16W	
R113			RK73GB1J104J	CHIP R 100K J 1/16W	
R114			RK73GB1J472J	CHIP R 4.7K J 1/16W	
R117			RK73GB1J823J	CHIP R 82K J 1/16W	
R118			RK73GB1J222J	CHIP R 2.2K J 1/16W	
R119,120			RK73GB1J223J	CHIP R 22K J 1/16W	
R121,122			RK73GB1J123J	CHIP R 12K J 1/16W	
R123			RK73GB1J223J	CHIP R 22K J 1/16W	
R124			RK73GB1J103J	CHIP R 10K J 1/16W	
R126			RK73GB1J183J	CHIP R 18K J 1/16W	
R127,128			RK73GB1J103J	CHIP R 10K J 1/16W	
R129			RK73GB1J472J	CHIP R 4.7K J 1/16W	
R130			RK73GB1J223J	CHIP R 22K J 1/16W	
R131			RK73GB1J101J	CHIP R 100 J 1/16W	
R132			RK73GB1J472J	CHIP R 4.7K J 1/16W	
R133			RK73GB1J103J	CHIP R 10K J 1/16W	
R134,135			RK73GB1J152J	CHIP R 1.5K J 1/16W	
R136			RK73GB1J331J	CHIP R 330 J 1/16W	
R137			RK73FB2A102J	CHIP R 1.0K J 1/10W	
R138			RK73GB1J152J	CHIP R 1.5K J 1/16W	
R139			RK73GB1J223J	CHIP R 22K J 1/16W	
R140			RK73GB1J470J	CHIP R 47 J 1/16W	
R141			RK73GB1J392J	CHIP R 3.9K J 1/16W	
R142,143			RK73GB1J222J	CHIP R 2.2K J 1/16W	
R144			RK73GB1J101J	CHIP R 100 J 1/16W	
R145			RK73GB1J472J	CHIP R 4.7K J 1/16W	
R146,147			RK73GB1J101J	CHIP R 100 J 1/16W	
R148			RK73GB1J471J	CHIP R 470 J 1/16W	
R149			RK73GB1J101J	CHIP R 100 J 1/16W	
R150			RK73GB1J471J	CHIP R 470 J 1/16W	
R151			RK73GB1J472J	CHIP R 4.7K J 1/16W	
R152			RK73GB1J152J	CHIP R 1.5K J 1/16W	
R153,154			RK73GB1J331J	CHIP R 330 J 1/16W	
R155			RK73GB1J222J	CHIP R 2.2K J 1/16W	
R156			RK73GB1J332J	CHIP R 3.3K J 1/16W	
R157			RK73GB1J222J	CHIP R 2.2K J 1/16W	
R158,159			RK73GB1J472J	CHIP R 4.7K J 1/16W	
R160			RK73GB1J103J	CHIP R 10K J 1/16W	
R161			RK73GB1J222J	CHIP R 2.2K J 1/16W	
R162,163			RK73GB1J331J	CHIP R 330 J 1/16W	
R164			RK73GB1J222J	CHIP R 2.2K J 1/16W	
R165			RK73GB1J331J	CHIP R 330 J 1/16W	
R166			RK73GB1J392J	CHIP R 3.9K J 1/16W	
R167			RK73GB1J472J	CHIP R 4.7K J 1/16W	
R168			RK73GB1J100J	CHIP R 10 J 1/16W	
R169			RK73GB1J471J	CHIP R 470 J 1/16W	
R170			RK73GB1J101J	CHIP R 100 J 1/16W	
R171,172			RK73FB2A100J	CHIP R 10 J 1/10W	
R173			RK73GB1J101J	CHIP R 100 J 1/16W	
R174			RK73GB1J123J	CHIP R 12K J 1/16W	
R175			RK73FB2A123J	CHIP R 12K J 1/10W	

PARTS LIST

TX-RX UNIT (X57-4620-00)

Ref. No.	Address	New parts	Parts No.	Description	Destination
R176			RK73FB2A183J	CHIP R 18K J 1/10W	
R177			RK73GB1J183J	CHIP R 18K J 1/16W	
R178			RK73FB2A153J	CHIP R 15K J 1/10W	
R179			RK73GB1J103J	CHIP R 10K J 1/16W	
R180			RK73GB1J821J	CHIP R 820 J 1/16W	
R181			RK73GB1J222J	CHIP R 2.2K J 1/16W	
R182			RK73GB1J103J	CHIP R 10K J 1/16W	
R183			RK73FB2A153J	CHIP R 15K J 1/10W	
R184			RK73GB1J272J	CHIP R 2.7K J 1/16W	
R185			RK73GB1J153J	CHIP R 15K J 1/16W	
R186			RK73FB2A222J	CHIP R 2.2K J 1/10W	
R187			RK73GB1J223J	CHIP R 22K J 1/16W	
R188			RK73GB1J101J	CHIP R 100 J 1/16W	
R189,190			RK73GB1J153J	CHIP R 15K J 1/16W	
R191,192			RK73GB1J222J	CHIP R 2.2K J 1/16W	
R193,194			RK73GB1J223J	CHIP R 22K J 1/16W	
R196			RK73FB2A472J	CHIP R 4.7K J 1/10W	
R197			RK73GB1J103J	CHIP R 10K J 1/16W	
R198,199			RK73GB1J104J	CHIP R 100K J 1/16W	
R200			RK73FB2A101J	CHIP R 100 J 1/10W	
R201			RK73GB1J221J	CHIP R 220 J 1/16W	
R202,203			RK73GB1J104J	CHIP R 100K J 1/16W	
R204			RK73GB1J222J	CHIP R 2.2K J 1/16W	
R205			RK73GB1J272J	CHIP R 2.7K J 1/16W	
R206			RK73GB1J224J	CHIP R 220K J 1/16W	
R207			RK73GB1J222J	CHIP R 2.2K J 1/16W	
R208			RK73GB1J123J	CHIP R 12K J 1/16W	
R209			RK73GB1J563J	CHIP R 56K J 1/16W	
R215			RK73GB1J681J	CHIP R 680 J 1/16W	
R220			RK73GB1J103J	CHIP R 10K J 1/16W	
R300			RK73FB2A100J	CHIP R 10 J 1/10W	
R301			RK73GB1J101J	CHIP R 100 J 1/16W	
R303-319			RK73GB1J101J	CHIP R 100 J 1/16W	
R320			RK73GB1J102J	CHIP R 1.0K J 1/16W	
R323			RK73GB1J101J	CHIP R 100 J 1/16W	
R325			RK73FB2A473J	CHIP R 47K J 1/10W	
R330			RK73GB1J470J	CHIP R 47 J 1/16W	
R331			RK73GB1J102J	CHIP R 1.0K J 1/16W	
R332			RK73GB1J222J	CHIP R 2.2K J 1/16W	
R334			RK73GB1J331J	CHIP R 330 J 1/16W	
R335			RK73GB1J101J	CHIP R 100 J 1/16W	
R336			RK73GB1J102J	CHIP R 1.0K J 1/16W	
R337,338			RK73GB1J124J	CHIP R 120K J 1/16W	
R339,340			RK73GB1J334J	CHIP R 330K J 1/16W	
R343			RK73GB1J471J	CHIP R 470 J 1/16W	
R344			RK73FB2A2R2J	CHIP R 2.2 J 1/10W	
R345-347			RK73GB1J101J	CHIP R 100 J 1/16W	
R348,349			RK73GB1J473J	CHIP R 47K J 1/16W	
R350,351			RK73FB2A473J	CHIP R 47K J 1/10W	
R352-354			RK73GB1J473J	CHIP R 47K J 1/16W	
R355			RK73GB1J103J	CHIP R 10K J 1/16W	
R356			RK73GB1J473J	CHIP R 47K J 1/16W	
R357			RK73GB1J103J	CHIP R 10K J 1/16W	
R358			RK73GB1J473J	CHIP R 47K J 1/16W	
R359			RK73GB1J101J	CHIP R 100 J 1/16W	
R364,365			RK73GB1J222J	CHIP R 2.2K J 1/16W	
R366			R92-1252-05	CHIP R 0 OHM	
R367,368			RK73FB2A473J	CHIP R 47K J 1/10W	
R369			RK73GB1J473J	CHIP R 47K J 1/16W	

Ref. No.	Address	New parts	Parts No.	Description	Destination
R371-374			RK73GB1J473J	CHIP R 47K J 1/16W	
R376			RK73GB1J473J	CHIP R 47K J 1/16W	
R377,378			RK73FB2A473J	CHIP R 47K J 1/10W	
R379			RK73GB1J473J	CHIP R 47K J 1/16W	
R380-418			RK73FB2A103J	CHIP R 10K J 1/10W	
R419-428			RK73GB1J101J	CHIP R 100 J 1/16W	
R429			RK73FB2A103J	CHIP R 10K J 1/10W	
R430			RK73GB1J472J	CHIP R 4.7K J 1/16W	
R431,432			RK73GB1J103J	CHIP R 10K J 1/16W	
R433			RK73GB1J102J	CHIP R 1.0K J 1/16W	
R434			RK73GB1J470J	CHIP R 47 J 1/16W	
R435,436			RK73GB1J472J	CHIP R 4.7K J 1/16W	
VR1,2			R12-6732-05	TRIMMING POT. 470	
VR3			R12-6742-05	TRIMMING POT. 22K	
D1-4			RLS73	DIODE	
D5			1SV166	DIODE	
D7			DAP202K	DIODE	
D8			RLS73	DIODE	
IC1,2		*	DSP56002FC40	IC	
IC3		*	MBCG24173-6173	IC (GATE ARRAY)	
IC4		*	27C256PCJJTC-K	IC	
IC5		*	27C256PCJJUC-K	IC	
IC6		*	27C256PCJJVC-K	IC	
IC7		*	MCM56824AFN20	IC	
IC7		*	MCM56824AFN25	IC	
IC9		*	7032LC44JLQA	IC	
IC15			MB86001PF	IC	
IC16			AK4318-VS	IC	
IC17			NJM2100M	IC (OP AMPLIFIER)	
IC18			MC74HC4053F	IC (ANALOG SW)	
IC19-21			NJM4560M	IC (OP AMP X2)	
IC22		*	AD822AR	IC	
IC23			MC74HC4052F	IC (HPF)	
IC24			NJM2100M	IC (OP AMPLIFIER)	
IC25			AK5340-VS	IC (AD CONVERTER (18 Bit))	
IC26			M62363FP	IC (8bit D/A CONVERTER)	
IC27			AK4318-VS	IC	
IC28			NJM2100M	IC (OP AMPLIFIER)	
IC29			M51131L	IC (ELECTRO VOLUME)	
IC30			NJM2100M	IC (OP AMPLIFIER)	
IC31			M51131L	IC (ELECTRO VOLUME)	
IC33			LA4422	IC (AF POWER AMP/ 5.8W)	
IC34			PCM69AU	IC (18bit D/A CONVERTOR)	
IC35		*	AD822AR	IC	
IC36			NJM4560M	IC (OP AMP X2)	
IC37,38			UPC7805H	IC (VOLTAGE REGULATOR/ +5V)	
IC39			NJM78L05UA	IC (VOLTAGE REGULATOR/ +5V)	
IC40			NJM78L08UA	IC (VOLTAGE REGULATOR/ +8V)	
IC41,42			NJM3404AM	IC (OP AMP X2)	
IC43			NJM5532M	IC (OP AMP)	
IC44			TC7S04F	IC (2CH NAND GATE)	
Q1			DTC124EK	DIGITAL TRANSISTOR	
Q2,3			2SC2714(Y)	TRANSISTOR	
Q4			DTC124EK	DIGITAL TRANSISTOR	
Q5-7			2SC3324(G)	TRANSISTOR	
Q8			2SK210(GR)	FET	
Q9,10			2SC2714(Y)	TRANSISTOR	
Q12			2SC2712(Y)	TRANSISTOR	
Q13-17			2SC2412K(S)	TRANSISTOR	

PARTS LSIT

TX-RX UNIT (X57-4620-00)
VCO2 (X58-3390-03)

Ref. No.	Address	New parts	Parts No.	Description	Destination
Q22			DTC124EK	DIGITAL TRANSISTOR	
Q23			2SC2712(Y)	TRANSISTOR	
Q25			DTA143EK	DIGITAL TRANSISTOR	
Q26			DTC124XK	DIGITAL TRANSISTOR	
Q27			DTC143EK	DIGITAL TRANSISTOR	
VCO2 (X58-3390-03)					
-			B42-2437-04	S/NO LABEL	
C1			CK73FB1H102K	CHIP C 1000PF K	
C2			CC73FSL1H101J	CHIP C 100PF J	
C3			CC73FCH1H070D	CHIP C 7.0PF D	
C4			CC73FCH1H070D	CHIP C 7.0PF D	
C4			CC73FCH1H220J	CHIP C 22PF J	
C6			CC73FCH1H180J	CHIP C 18PF J	
C7			CC73FCH1H120J	CHIP C 12PF J	
C8,9			CK73FB1H102K	CHIP C 1000PF K	
C10			CC73FCH1H010C	CHIP C 1.0PF C	
C11			CK73FB1H102K	CHIP C 1000PF K	
TC1			C05-0331-15	TRIMMER CAPACITOR 10PF	
TP1-3			E23-0464-05	TERMINAL	
-			F11-1085-04	SHIELDING CASE	
-			F11-1086-14	SHIELDING COVER	
			G13-0904-04	CUSHION (COVER)	
L1			L33-0690-05	CHOKE COIL (3.3UH)	
L2			L34-2353-05	COIL	
T	2F		N30-2604-41	PAN HEAD MACHIN SCREW	
R1			RK73FB2A682J	CHIP R 6.8K J 1/10W	
R2			RK73FB2A271J	CHIP R 270 J 1/10W	
R3			RK73FB2A330J	CHIP R 33 J 1/10W	
R4,5			RK73FB2A472J	CHIP R 4.7K J 1/10W	
R6			RK73FB2A471J	CHIP R 470 J 1/10W	
R7			RK73FB2A560J	CHIP R 56 J 1/10W	
D1			1SV164	DIODE	
Q1			2SK508NV(K52)	FET	
Q2			2SC2714(Y)	TRANSISTOR	

EXPLODED VIEW

H	M3 x 6 (F)	: N32-3006-46
I	M3 x 6 (OC)	: N33-3006-41
J	M2.6 x 6 (Br-Tap)	: N87-2606-46
K	M3 x 6 (Br-Tap)	: N87-3006-46
M	M2.6 x 8 (F-Tap)	: N88-2608-46
P	M3 x 10 (TP-T)	: N91-3010-46

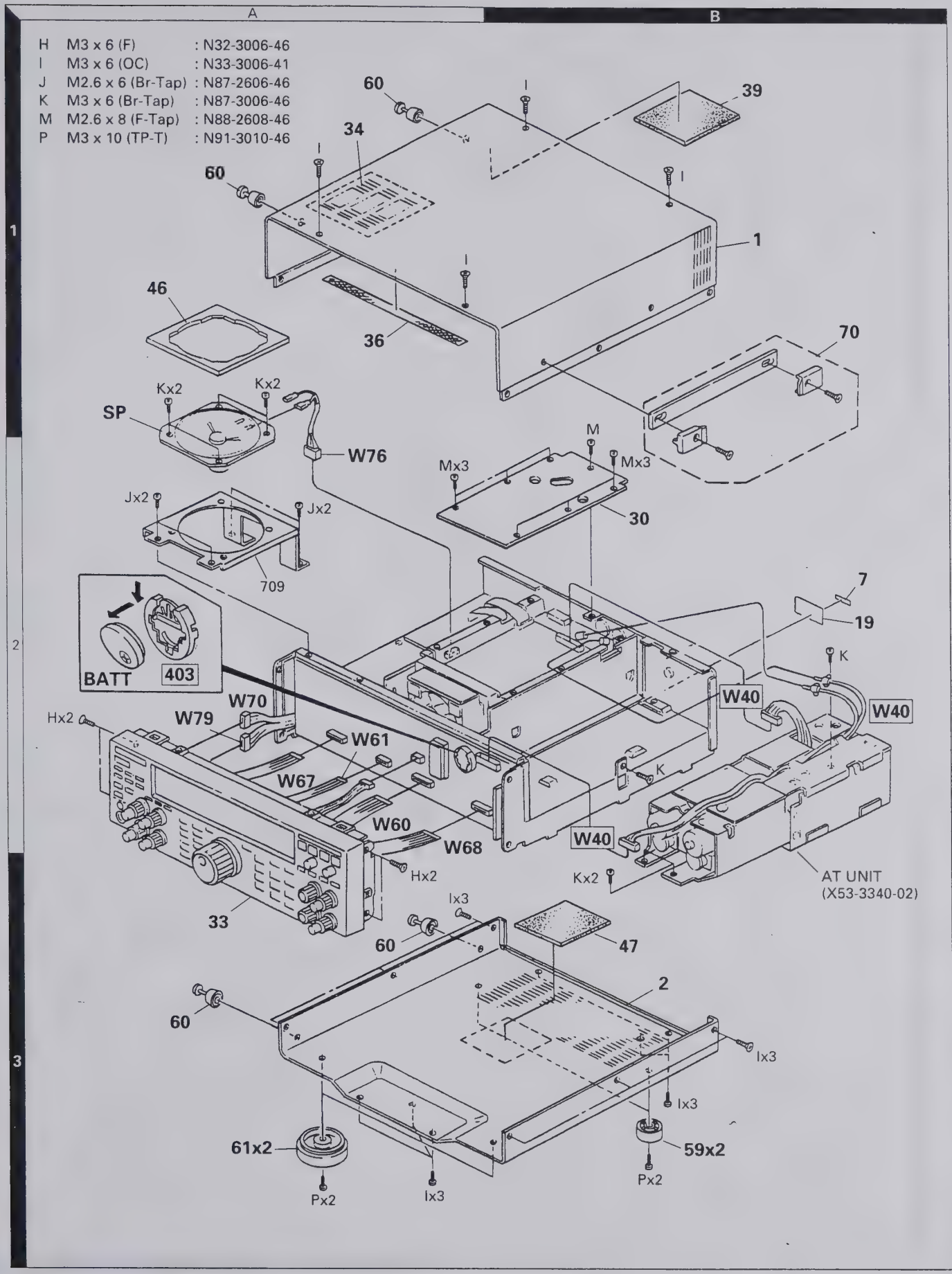

Parts with the exploded numbers larger than 700 are not supplied.

EXPLODED VIEW

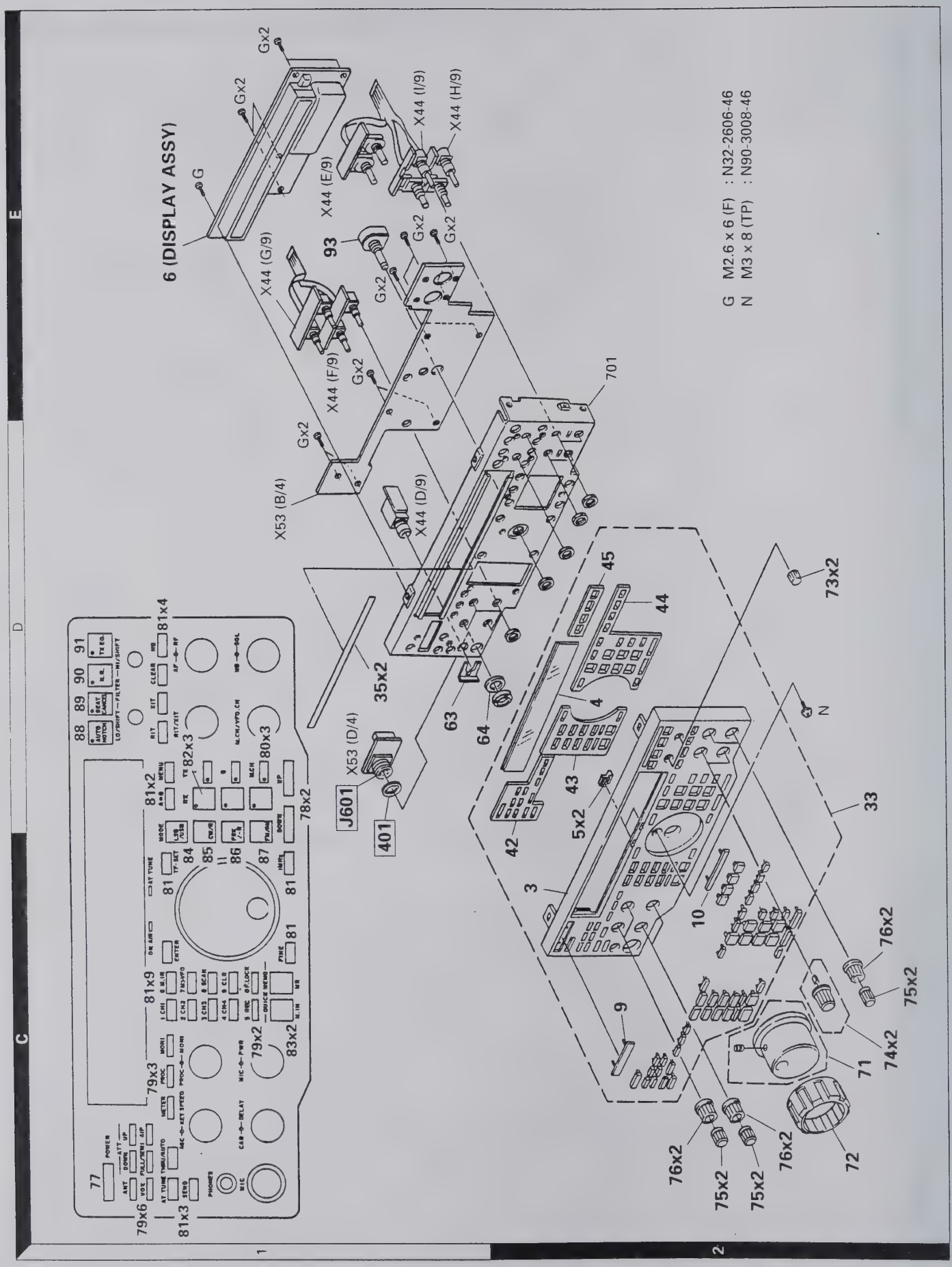

Parts with the exploded numbers larger than 700 are not supplied.

EXPLODED VIEW

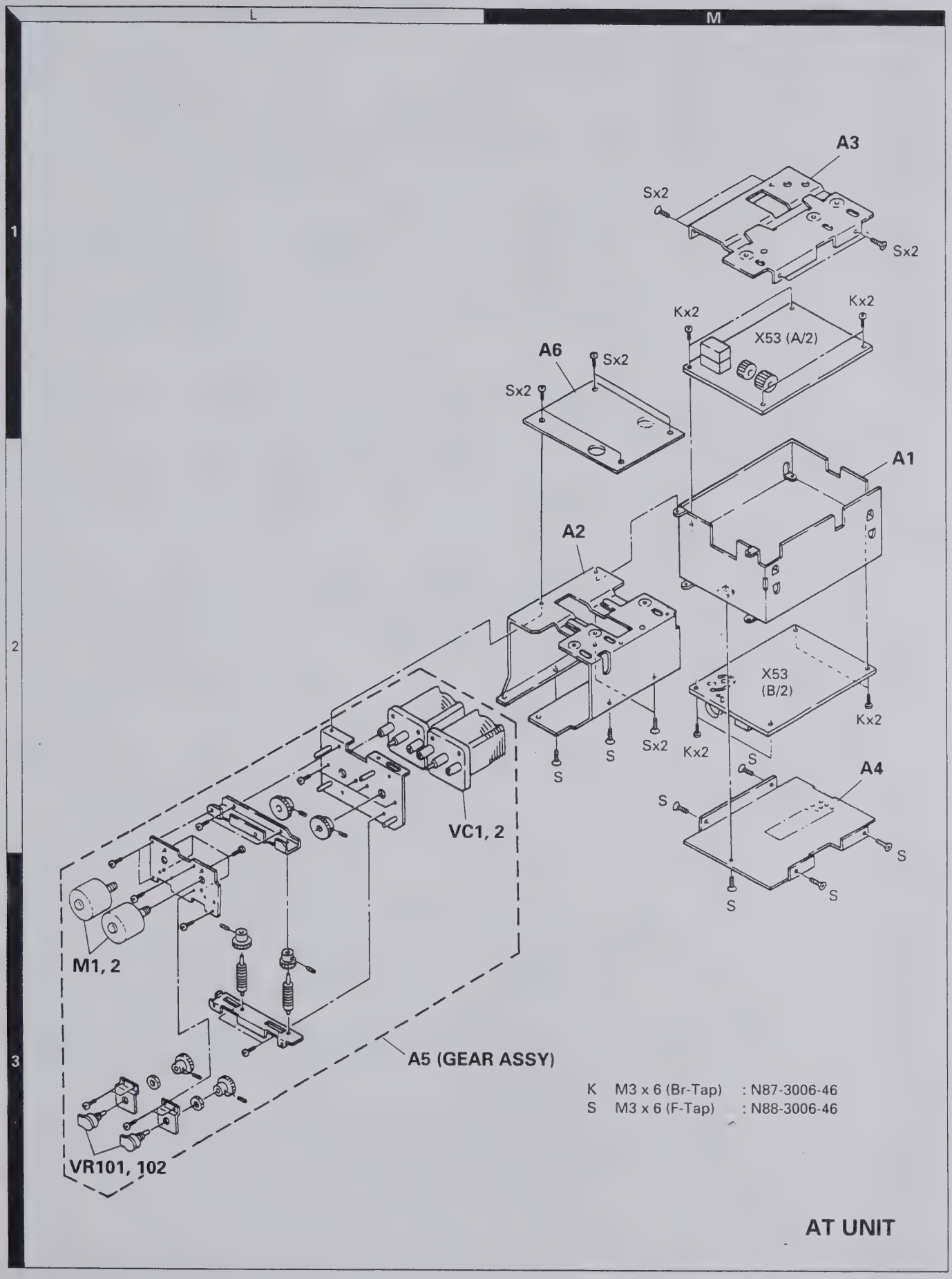

PACKING

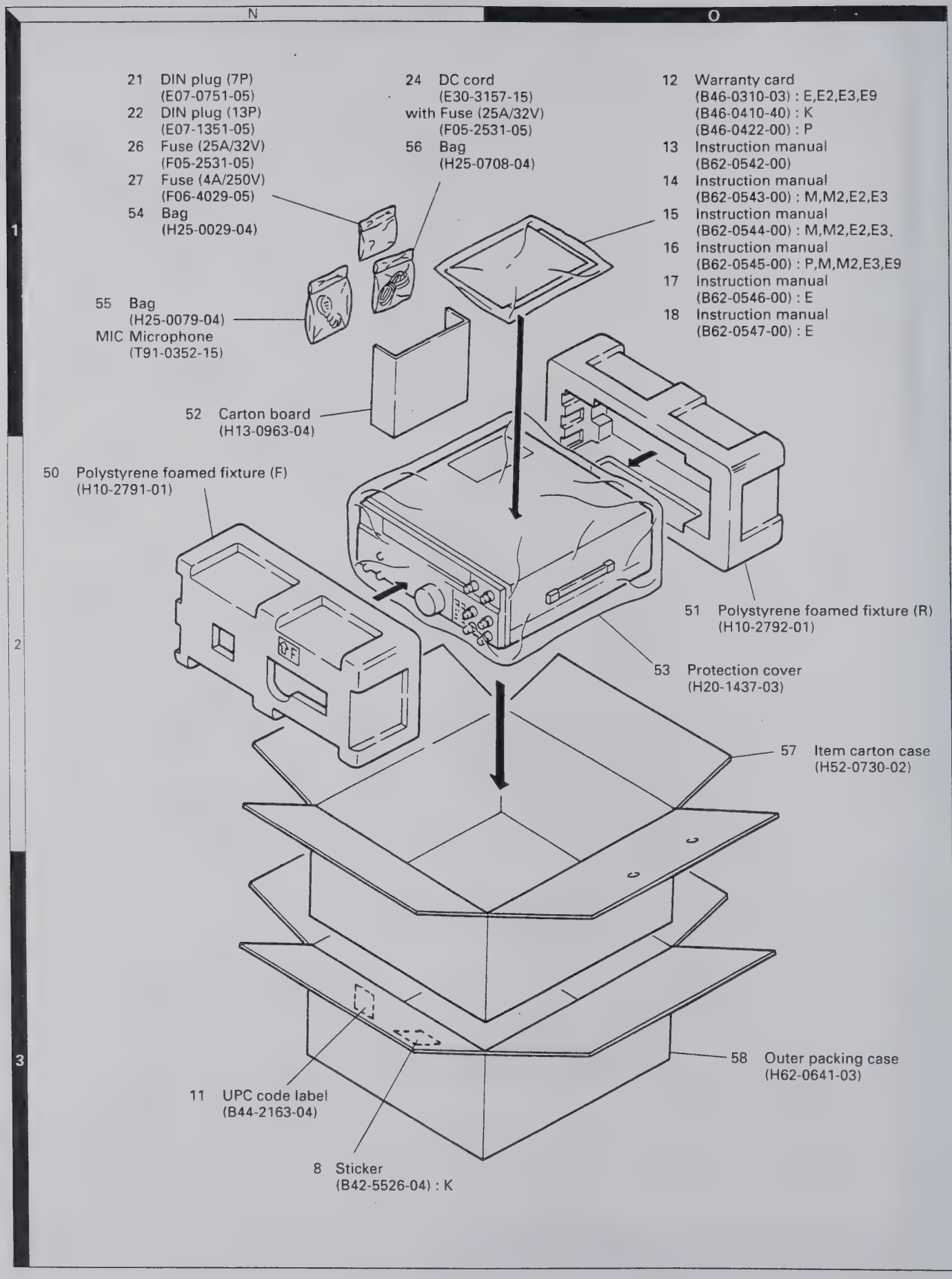
N
O
1
2
3
21 DIN plug (7P) (E07-0751-05)
22 DIN plug (13P) (E07-1351-05)
26 Fuse (25A/32V) (F05-2531-05)
27 Fuse (4A/250V) (F06-4029-05)
54 Bag (H25-0029-04)
24 DC cord (E30-3157-15) with Fuse (25A/32V) (F05-2531-05)
56 Bag (H25-0708-04)
12 Warranty card (B46-0310-03) : E,E2,E3,E9 (B46-0410-40) : K (B46-0422-00) : P
13 Instruction manual (B62-0542-00)
14 Instruction manual (B62-0543-00) : M,M2,E2,E3
15 Instruction manual (B62-0544-00) : M,M2,E2,E3
16 Instruction manual (B62-0545-00) : P,M,M2,E3,E9
17 Instruction manual (B62-0546-00) : E
18 Instruction manual (B62-0547-00) : E
55 Bag (H25-0079-04)
MIC Microphone (T91-0352-15)
52 Carton board (H13-0963-04)
50 Polystyrene foamed fixture (F) (H10-2791-01)
51 Polystyrene foamed fixture (R) (H10-2792-01)
53 Protection cover (H20-1437-03)
57 Item carton case (H52-0730-02)
58 Outer packing case (H62-0641-03)
11 UPC code label (B44-2163-04)
8 Sticker (B42-5526-04) : K

ADJUSTMENT

Required Test Equipment

1. DC Voltmeter (DC V.M)
1) Input resistance : More than 1MΩ
2) Voltage range : 1.5 to 1000V AC/DC
Note : A high-recision multimeter may be used. However, accurate readings can not be obtained for high-impedance circuits.

2. DC Ammeter
1) Current range : 100mA, 1.5A, 15A, high-precision ammeter may be used.

3. RF VTVM (RF V.M)
1) Input impedance : 1MΩ and less than 3pF, min.
2) Voltage range : 10mV to 300V
3) Frequency range : 10kHz to 500MHz

4. AF Voltmeter (AF V.M)
1) Frequency range : 50Hz to 10kHz
2) Input resistance : 1MΩ or greater
3) Voltage range : 10mV to 30V

5. AF Generator (AG)
1) Frequency range : 200Hz to 5kHz
2) Output : 1mV or less to 1V, low distortion

6. AF Dummy Load (DM. SP)
1) Impedance : 8Ω
2) Dissipation : 3W or greater

7. Oscilloscope
Requires high sensitivity, and external synchronization capability (150MHz or greater).

8. Sweep Generator (Sweep G.)
1) Center frequency : 50kHz to 90MHz
2) Frequency deviation : Maximum ±35kHz
3) Output voltage : 100mV or greater

9. Standard Signal Generator (SSG)
1) Frequency range : 50kHz to 50MHz
2) Output : –133dBm/0.05μV to 7dBm/500mV
3) Output impedance : 50Ω
4) AM and FM modulation can be possible
Note : Generator must be frequency stable.

10. Frequency Counter (f. counter)
1) Minimum input voltage : 50mV
2) Frequency range : 150MHz or greater

11. Noise Generator (Noise G.)
Must generate ignition noise containing harmonics beyond 30MHz.

12. RF Dummy Load
1) Impedance : 150Ω and 50Ω
2) Dissipation : 150W or greater

13. Linear Detector
1) Frequency range : 30MHz

14. Power Meter
1) Impedance : 50Ω
2) Dissipation : 300W continuous or greater
3) Frequency limits : 60MHz or greater

15. Spectrum Analyzer
1) Frequency range : 100kHz to 110MHz or greater
2) Bandwidth : 1kHz to 3MHz

16. Detector
1) For adjustment of BPF

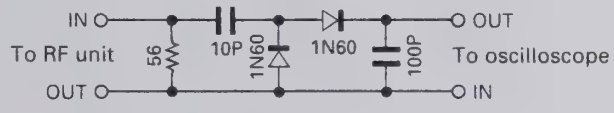

2) For adjustment of PLL/VCO BPF

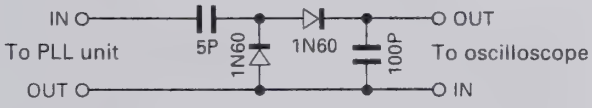

17. Directional Coupler

18. Monitor Receiver
R-1000 class

19. Microphone
MC-43S or MC-60S8

20. Tracking Generator

21. Distortion Meter

22. Double Signal Pad (50Ω)

ADJUSTMENT

Preparation

Unless otherwise specified, knobs and switches should be set as follows.

POWER	ON	PROCESSOR	Center
ATT	0	MIC	Center
AGC	Center	PWR	MAX
NB LEVEL	Center	CAR	Center
SQL	0		
AF	0		
RF	MAX		

Front Panel

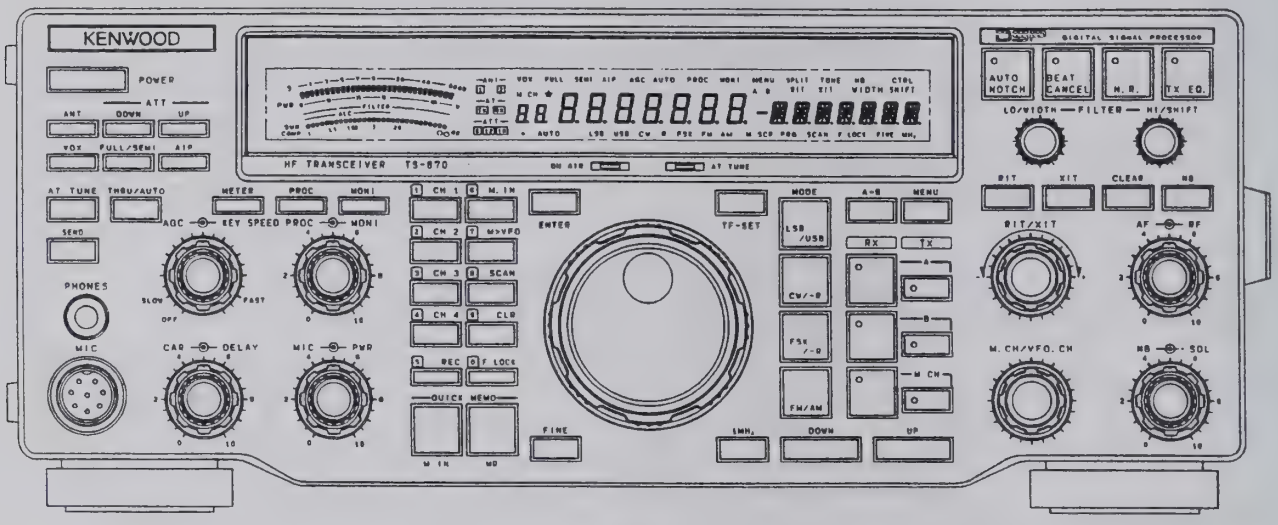

Rear Panel

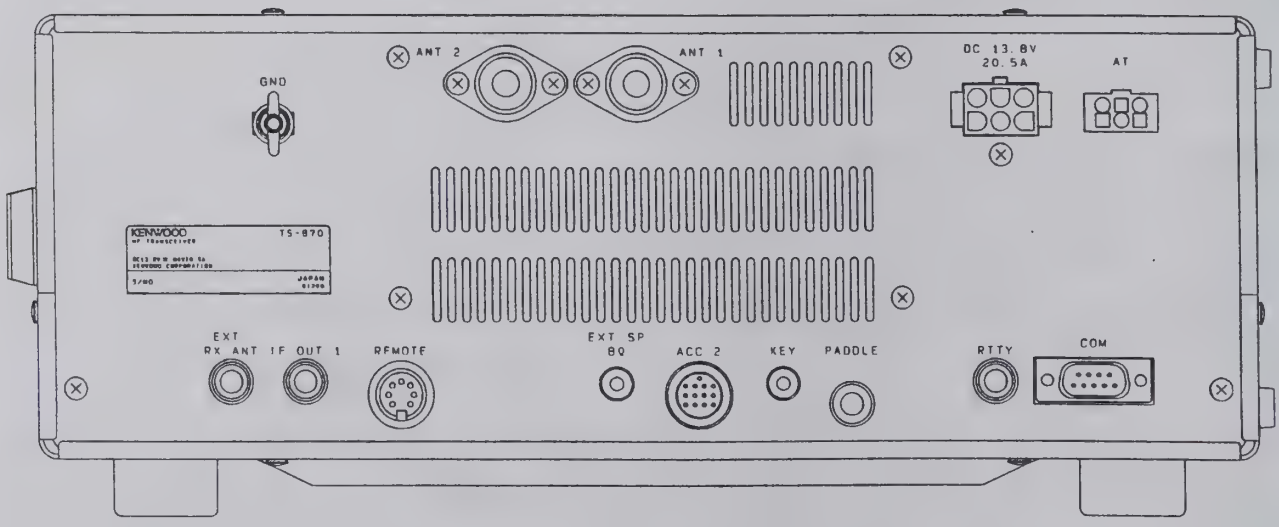

ADJUSTMENT

Service Jig

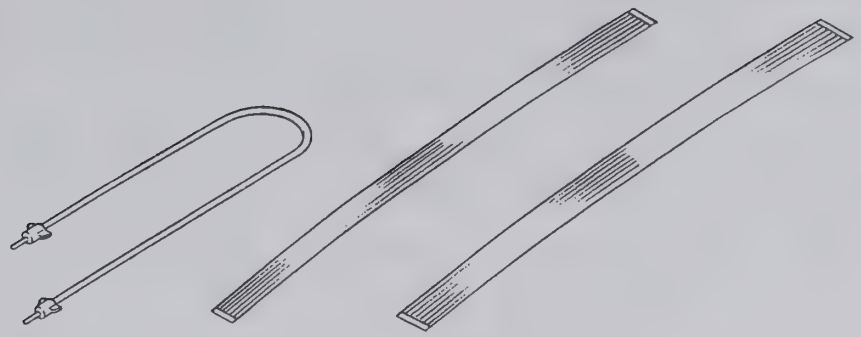

A. Lead wire with minipin plug
(E37-0064-05)
About 27cm

B . Flat cable (8P)
(E37-0581-05)
About 25cm

C. Flat cable (12P)
(E37-0580-05)
About 25cm

How to Use

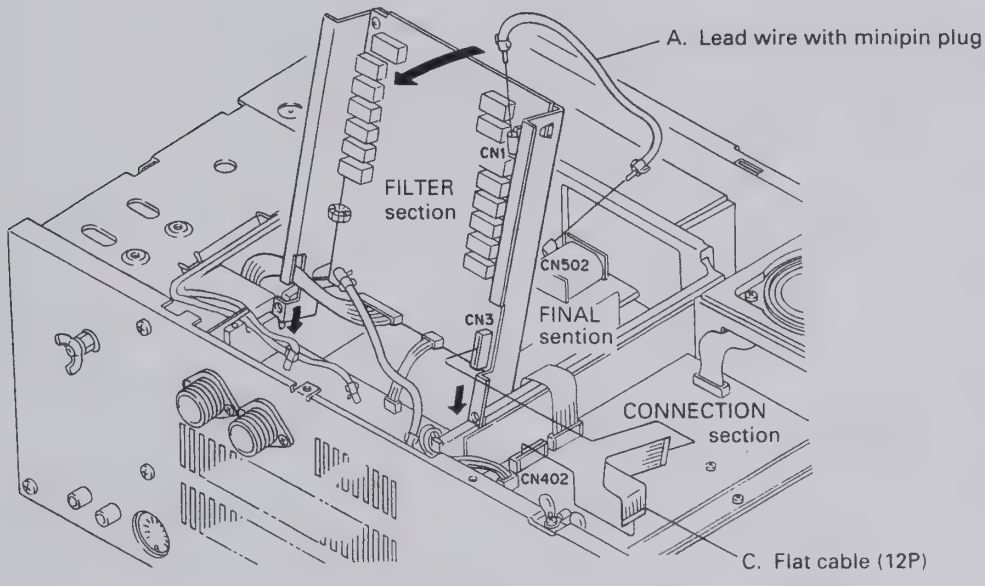

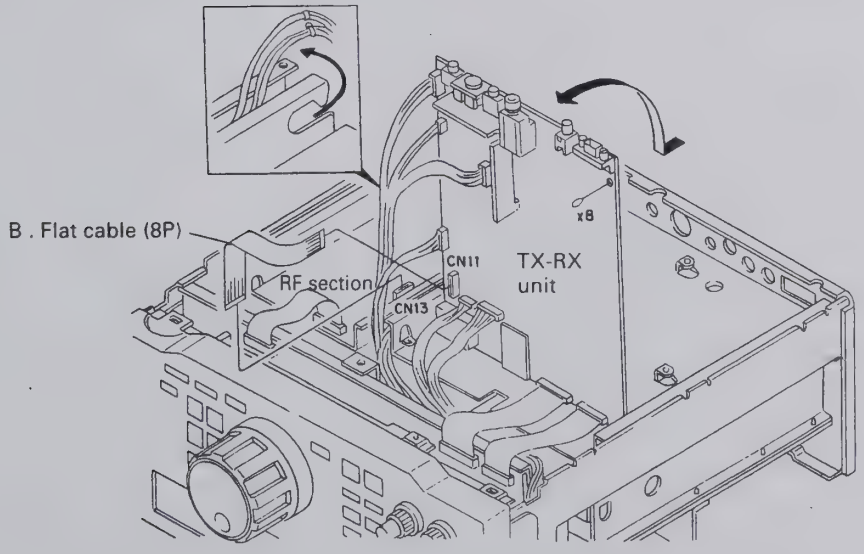

ADJUSTMENT

Service Adjustment Mode

■ Outline

- The TS-870S is adjusted by the normal method and by another method using the service adjustment mode.
- In the adjustment mode, there are 28 menu numbers A0 to BB. All adjustment data items are saved in the EEPROM.
- When the service adjustment mode is entered, data is read from the EEPROM and placed in the CPU RAM so that settings can be modified.
- The EEPROM is updated only when data is written in Menu No. BA.

  Note : Transmission is possible in reception-related adjustment modes.

■ Operation procedure

1. Adjustment mode start
   Hold down the [N.R.] key and [LSB/USB] key, and turn the [POWER] switch ON to enter the adjustment mode. The menu number will appear in M. CH on the display.
2. Adjustment mode menu number selection
   When the [M. CH/VFO. CH] control is turned, the menu number changes.
3. Adjustment mode data writing
   Press the [UP]/[DOWN] key or the microphone [UP]/[DOWN] key in MENU No. BA.
4. Adjustment mode cancel
   When the [CLR] key is pressed, the normal memory-channel display returns.

   Note : If the power is switched OFF in the adjustment mode, it is canceled.

Service Adjustment Mode Menu

Menu No.	Adjustment function	Description
A0	System	Checksum display (Program version confirmation)
A1	ALC	ALC reference voltage adjustment
A2	S-meter (SSB)	Start level setting
A3		S9 level setting
A4		Full-scale level setting
A5	Filter	8.83MHz IF filter center frequency correction
A6		455kHz IF filter center frequency correction
A7	Power adjustment	100W adjustment (With power meter curve)
A8		50W adjustment (With power meter curve)
A9		25W adjustment (With power meter curve)
AA		10W adjustment (With power meter curve)
AB	TX gain	1.9MHz band
AC		3.5MHz band
AD		7MHz band
AE		10MHz band
AF		14MHz band
B0		18MHz band
B1		21MHz band
B2		24.5MHz band
B3		29MHz band
B4	ALC meter	Stare level setting
B5		Maximum zone level setting
B6		Full-scale level setting
B7	SWR protection	Protection operation setting
B8	SWR meter	VSWR=3 level setting
B9	FM	FM deviation setting
BA	System	Writing into EEPROM
BB	Display	All LCD segments light (Not light ON AIR lamp)

ADJUSTMENT

Display Check

Item	Condition	Measurement			Adjustment			Specifications/Remarks
		Test-equipment	Unit	Terminal	Unit	Parts	Method	
1. All reset	1) DC IN : DC 13.8V Pushing [A=B] key down, [POWER] : ON.				Front panel	Display	After displaying HELLO, the display is reset as follows: DISP f. : 14.000.00 MODE : USB METER : ALC ANT : 1 AGC	Display should be normal Should be at the reset frequency
2. All LCD segments lignt	1) Menu No. : BB						Check	All LCD segments light.

PLL Section

Item	Condition	Measurement			Adjustment			Specifications/Remarks
		Test-equipment	Unit	Terminal	Unit	Parts	Method	
1. 20MHz frequency adj.	1) [POWER] : ON MODE : FM Receive	f. counter	PLL	CN510 (TP)	PLL	TC800	Frequency adjust.	20.000MHz ± 20Hz
2. 20MHz peak adj.	1) Display f. : 14.000MHz MODE : USB Receive	RF V.M		CN503		L528	MAX.	
3. 60MHz BPF adj.	1) MODE : FM Receive			IC506 2 pin		L529 L530	Repeat for MAX.	
4. 55MHz BPF adj. and frequency check	1) Display f. : 14.000MHz MODE : FM Receive			IC508 11 pin		L518 L519 L520	Repeat for MAX.	
	2) Display f. : 14.000MHz	f. counter					Frequency check	55.299~55.301MHz
5. Lock voltage adj. & check VCO1	1) Display f. : 30kHz	DC V.M		TP501	PLL	TC506	1.8V	1.8 ± 0.03V
	2) Display f. : 7.489MHz						Voltage check	4.5~7.0V
6. Lock voltage adj. & check VCO2	1) Display f. : 7.500MHz				PLL	TC507	1.8V	1.8 ± 0.03V
	2) Display f. : 14.489MHz						Voltage check	4.5~7.0V
7. Lock voltage adj. & check VCO3	1) Display f. : 14.490MHz				PLL	TC508	1.8V	1.8 ± 0.03V
	2) Display f. : 21.489MHz						Voltage check	4.5~7.0V
8. Lock voltage adj. & check VCO4	1) Display f. : 21.490MHz				PLL	TC509	1.8V	1.8 ± 0.03V
	2) Display f. : 30.000MHz						Voltage check	4.5~7.0V
9. Lock voltage adj. LO2A (VCO2) X58-3390-03	1) Display f. : 30.000MHz			TP502	VCO2 X58-3390	TC1	5.0V	5.0 ± 0.03V

ADJUSTMENT

Item	Condition	Measurement			Adjustment			Specifications/Remarks
		Test-equipment	Unit	Terminal	Unit	Parts	Method	
10. Output level check LO1 (CN504)	1) Display f. : 14.000MHz MODE : USB Receive			CN504			Output level check	–5~+2dBm
LO2A (CN505)	Meaturement condition : 50Ω terminated			CN505				–1~+6dBm (64.220MHz)
LO3 (CN502)				CN502				–6~+0dBm (8.375MHz)
20MHz (CN503)				CN503				–10~+0dBm (20.0000MHz)
LO4 (CN501)		Oscilloscope		CN501				–10~+0dBm (10.0kHz)
11. 20MHz frequency (Final check)	1) MODE : USB Receive	f. counter		CN510 (TP)	PLL	TC800	Check	20.000MHz ± 20Hz

Receiver Section

Item	Condition	Measurement			Adjustment			Specifications/Remarks
		Test-equipment	Unit	Terminal	Unit	Parts	Method	
1. DSP PLL lock voltage adj.	1) Display f. : 14.000MHz MODE : USB	DC V.M	TX-RX	TP1	TX-RX	L4	3.50V	±0.1V
2. AGC voltage adj.	1) Display f. : 14.000MHz MODE : CW [RF] GAIN : MAX [AGC] : OFF			TP2		VR2	3.00V	±0.1V
3. MCF adj.	1) Display f. : 14.000MHz MODE : USB [AGC] : OFF Spectrum analyzer setting Center f. : 73.050MHz Frequency span : 50kHz ATT : –10dBm VBW, RBW : 1kHz V.REF : 2dB/DIV	Spectrum analyzer Tracking generator	RF	CN16 CN17	RF	L65 L67 L70 L72	Adjust so that gain is max. and band shown at right becomes flat.	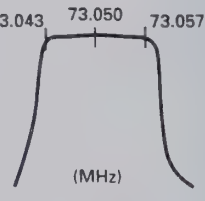
4. BPF adj.	1) Display f. : 7.000MHz MODE : USB [AGC] : OFF [AIP] : OFF Spectrum analyzer setting Center f. : 7.100MHz Frequency span : 2MHz	Spectrum analyser Tracking generator	Rear panel RF	ANT CN15	RF	L28 L29 L30 L31	Waveform is as shown in the figure at the right.	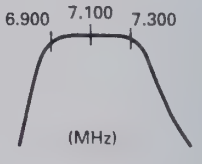
	2) Display f. : 14.000MHz Spectrum analyzer setting Center f. : 14.000MHz Frequency span : 5MHz					L38 L39 L40		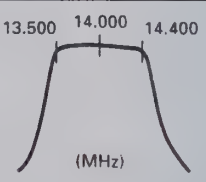
	3) Display f. : 21.000MHz Spectrum analyzer setting Center f. : 21.200MHz Frequency span : 10MHz					L44 L45 L46		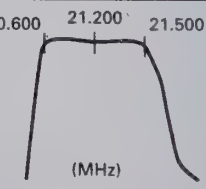

ADJUSTMENT

Item	Condition	Measurement			Adjustment			Specifications/Remarks
		Test-equipment	Unit	Terminal	Unit	Parts	Method	
(28MHz BPF adj.)	1) Display f. : 29.800MHz MODE : USB [AGC] : FAST SSG frequency : 22.101MHz SSG output : –113dBm	SSG AF V.M Oscilloscope DM. SP	Rear panel	ANT EXT. SP	RF	L50 L52	Adjust so that the gain is MAX.	MAX.
5. RX IF AMP adj.	1) Display f. : 14.100MHz MODE : USB [AGC] : OFF [AIP] : OFF AF output : 0.63V/8Ω SSG frequency : 14.101MHz SSG output : –119dBm	SSG AF V.M Oscilloscope DM. SP	Rear panel	ANT EXT. SP	RF Connec-tion	L75 L77 L451 L452 L458	Repeat 2~3 times for MAX AF output reading.	
• Item 6 to 10 below are adjusted in the adjustment mode. To terminate the adjustment menu in the middle, save your settings with Menu No. BA.								
6. Checksum check	1) Menu No. : A0				Front panel	Display	Check	Display : E7b9
7. ALC voltage adj.	1) Menu No. : A1	DC V.M	RF	TP2	Front panel	[RIT/XIT] knob	2.70V	±0.02V
8. S-meter adj.	1) Menu No. : A2 SSG frequency : 14.101MHz SSG output : –110dBm	SSG AF V.M Oscilloscope DM. SP	Rear panel	ANT EXT. SP	TX-RX	VR1	Display : 05	±02
S1	2) Menu No. : A2 SSG output : –107dBm				Front panel	[UP] key	[UP] key : Push once time	Reference display : 12±06
S9	3) Menu No. : A3 SSG output : –81dBm							Reference display : 45±10
Full-scale	4) Menu No. : A4 SSG output : –23dBm							Reference display : 80±20
9. 8.83MHz IF filter adj.	1) Menu No. : A5 SSG1 f. : 1.79980MHz SSG1 output : –60dBm SSG2 f. : 1.80260MHz SSG2 output : –60dBm	SSG1 SSG2 Double signal pad Oscilloscope (10:1 probe)	Rear panel Connec-tion	ANT TP401	Front panel	[RIT/XIT] knob	The waveforms must cross.	OK 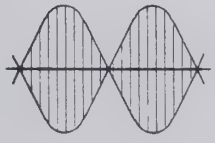
10. 455kHz IF filter adj.	1) Menu No. : A6			TP402				NG 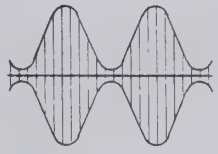

• Writing data : After items 6 to 10 have been adjusted:
1) Menu No. : BA
2) [UP] key : Push once time Display "rEAdy" → "good" (If "nG" is displayed, enter data again.)
3) [CLR] key : Push once time (Adjustment mode terminated)

ADJUSTMENT

Item	Condition	Measurement			Adjustment			Specifications/Remarks
		Test-equipment	Unit	Terminal	Unit	Parts	Method	
11. ATT check	1) Display f. : 14.100MHz SSG frequency : 14.101MHz SSG output : –107dBm [AGC] : OFF [AIP] : OFF AF output : 1V/8Ω	SSG AF V.M Oscilloscope DM. SP	Rear panel	ANT EXT. SP	Front panel	ATT SW (UP/ DOWN)	AF output should be lowered 6dB at time.	AF output ± 3dB
	a. ATT : 0dB						1.0V	ATT display : None
	b. ATT [UP] key : 6dB						0.5V	ATT display : 6
	c. ATT [UP] key : 12dB						0.25V	ATT display : 12
	d. ATT [UP] key : 18dB						0.125V	ATT display : 18
	e. ATT [DOWN] key : 12dB						0.25V	ATT display : 12
	f. ATT [DOWN] key : 6dB						0.5V	ATT display : 6
	g. ATT [DOWN] key : 0dB						1.0V	ATT display : None
12. S/N check	1) Display f. : Indicated below AF VR : 0.63V/8Ω SSG f. : Indicated below However, USB : +1kHz LSB : –1kHz	SSG AF V.M Oscilloscope Distortion meter DM. SP	Rear panel	ANT EXT. SP				Note : If the frequency is 7.5MHz or less, AIP turns ON automatically. Turn AIP OFF with the AIP switch before starting measurement.
	Frequency / MODE / SSG output / SSG MOD / DEV							
	100kHz AM	–87dBm	1kHz	60%			S/N measurement	10dB or more.
	1.500MHz AM	–77dBm	1kHz	60%				
	1.8MHz LSB	–119dBm	OFF	OFF			MAX sensitivity measurement	0.7V/8Ω or more.
	3.5MHz LSB	–119dBm	OFF	OFF				
	5.5MHz LSB	–119dBm	OFF	OFF				
	7.1MHz LSB	–119dBm	OFF	OFF				
	10.1MHz USB	–119dBm	OFF	OFF				
	12.5MHz USB	–119dBm	OFF	OFF				
	14.1MHz USB	–119dBm	OFF	OFF	←		[AIP] : ON	Sensitivity down 5~15dB.
	18.1MHz USB	–119dBm	OFF	OFF				
	21.1MHz USB	–119dBm	OFF	OFF				
	24.8MHz USB	–123dBm	OFF	OFF				
	29.8MHz USB	–123dBm	OFF	OFF				
	29.8MHz FM	–119dBm	1kHz	3kHz	←		SINAD sentitivity measurement	12dB SINAD or more.
13 SSB squelch check	1) Display f. : 14.100MHz MODE : USB [AGC] : OFF SSG frequency : 14.101MHz SSG output : OFF	SSG AF V.M Oscilloscope DM. SP	Rear panel	ANT EXT. SP	Front panel	[SQL] VR	Set to the point noise disappeared.	Knob position 10 : 00~14 : 00
	2) SSG output : –101dBm						Check	Squelch should open.
	3) [SQL] VR : Fully clockwise							Squelch should close.
	4) SSG output : –83dBm							Squelch should open.
14. FM squelch check	1) Display f. : 29.8MHz MODE : FM SSG output : OFF				Front panel	[SQL] VR	Set o the point noise disappeared.	Knob position 8 : 00~12 : 00
	2) SSG output : –119dBm SSG MOD : 1kHz SSG DEV : 3kHz						Check	Squelch should open.
	3) [SQL] VR : Fully clockwise							Squelch should close.
	4) SSG output : –100dBm							Squelch should open.

ADJUSTMENT

Item	Condition	Measurement			Adjustment			Specifications/Remarks
		Test-equipment	Unit	Terminal	Unit	Parts	Method	
15. NB adj.	1) Display f. : 14.100MHz MODE : USB SSG frequency : 14.101MHz SSG output : –90dBm	SSG AF V.M Oscilloscope DM. SP DC V.M	Rear panel RF	ANT EXT. SP TP1	RF	L81 L82	Voltage minimum	
	2) [NB] key : ON [NB] VR : Center	Noise G.	Rear panel	ANT			Adjust output of noise generator to small input (S1) and large input (S9) and check each.	Noise should disappear.
16. S-meter check	1) Display f. : 14.175MHz MODE : USB [AGC] : FAST [RF] GAIN : MAX SSG frequency : 14.176MHz SSG output : –107dBm	SSG AF V.M Oscilloscope DM. SP	Rear panel	ANT EXT. SP	Front panel	Display	S-meter level : S1	–111~–101dBm
	2) SSG output : –83dBm						S-meter level : S9	–89~–77dBm
	3) [NB] key : ON						S-meter level check	Same as when [NB] key off.
17. Auto notch check	1) Display f. : 14.175MHz MODE : USB SSG frequency : 14.1765MHz SSG output : –73dBm [AUTO NOTCH] key : Push (ON)	SSG	Rear panel	ANT	Front panel	Display	S-meter level check	S-meter off.
18. Voice check (equipped on VS-2)	1) [AF] VR : Arbitrary [MENU] key : Push (ON) [M.CH/VFO.CH] knob : Menu No. 48 [UP] key : Step 73 [MENU] key : Push (OFF) [FINE] key : Push (ON)						Check	The displayed frequency can be heard vocally.

Transmitter Section

Item	Condition	Measurement			Adjustment			Specifications/Remarks
		Test-equipment	Unit	Terminal	Unit	Parts	Method	
1. TX MCF adj.	1) Display f. : 14.200MHz MODE : USB Transmit Spectrum analyzer setting TG output : –10dBm Center f. : 8.83MHz Span : 10kHz V.REF : 2dB/DIV	Tracking generator Spectrum analyzer	RF	CN10 TP3	RF	L100	MAX.	
2. TX IF AMP adj.	1) Display f. : 14.200MHz MODE : CW [CAR] VR : Center Disconnect CN4 from the RF unit and connect a 50Ω dummy load. Transmit	50Ω dummy Oscilloscope	RF	CN4	RF Connection	L99,98 L95,94 L92,91 L89 VR3 L457 L456 L455	Repeat 2 or 3 times for MAX.	Reference value 2.5Vp-p or more
	2) After adjustment, set [CAR] VR to MAX for confirmation.							

ADJUSTMENT

Item	Condition	Measurement			Adjustment			Specifications/Remarks
		Test-equipment	Unit	Terminal	Unit	Parts	Method	
3. Final base current	1) Display f. : 14.200MHz MODE : USB [MIC] VR : MIN [CAR] VR : MIN Final unit VR501,502 : MIN Connect ammeter + : External power supply – : Power connector Adjust to minimum current with VR501 and VR502 in the final unit. Transmit	Ammeter			Final	VR501	Current drain (Minimum current) +250mA	First adjust VR501 and VR502 for minimum. Adjust VR501 for an increase of 250mA when switched to TX. Then adjust VR502 for 250mA over this reading.
						VR502	Current drain (Minimum current) + driver current (250mA) + 250mA.	
• Item 4 to 13 below are adjusted in the adjustment mode. To terminate the adjustment menu in the middle, save your settings with Menu No. BA.								
4. ALC adj.	1) Menu No. : A7 Transmit	Power meter	Rear panel	ANT	Front panel	[RIT/XIT] knob	100W	±5.0W
5. NULL adj.	1) Menu No. : A7 Transmit	Power meter DC V.M	Rear panel Filter	ANT CN5	Filter	TC1	MIN.	Reference value 0.5V or less
6. ALC frequency response adj.	1) TX [M.CH] key : Push Display f. : 29.700MHz MODE : CW Transmit	Power meter	Front panel	ANT	Filter	VR1	95W	±5.0W
	2) TX [M.CH] key : Push Menu No. : A7 Transmit						100W power check	100W ± 5W When unable to be set within the range, ALC and frequency response to be adjusted.
7. TX power adj The power meter on the display is also calibrat--ed at the same time.	1) 50W Menu No. : A8 Transmit After adjustment, [UP] key : Push	Power meter	Rear panel	ANT	Front panel	[RIT/XIT] knob	50W	±3.0W
	2) 25W Menu No. : A9 Transmit After adjustment, [UP] key : Push						25W	±2.0W
	3) 10W Menu No. : AA Transmit After adjustment, [UP] key : Push						11W	±2.0W
8. TX gain adj.	1) 1.9MHz band Menu No. : AB Transmit	Power meter	Rear panel	ANT	Front panel	[UP] key	Press the [UP] key after the beep sounds for two or three seconds.	
	2) 3.5MHz band Menu No. : AC Transmit							
	3) 7.0MHz band Menu No. : AD Transmit							
	4) 10.1MHz band Menu No. : AE Transmit							
	5) 14.1MHz band Menu No. : AF Transmit							

ADJUSTMENT

Item	Condition	Measurement			Adjustment			Specifications/Remarks
		Test-equipment	Unit	Terminal	Unit	Parts	Method	
	6) 18.0MHz band Menu No. : B0 Transmit	Power meter	Rear panel	ANT	Front panel	[UP] key	Press the [UP] key after the beep sounds for two or three seconds.	
	7) 21.0MHz band Menu No. : B1 Transmit							
	8) 24.9MHz band Menu No. : B2 Transmit							
	9) 29.7MHz band Menu No. : B3 Transmit							
9. ALC meter adj.	1) 1 dot Menu No. : B4 Transmit	Power meter	Rear panel	ANT	Front panel	[UP] key	[UP] key : Push	
	2) Zone MAX Menu No. : B5 Transmit							
	3) Full Menu No. : B6 Transmit							
10. SWR protection adj.	1) Nenu No. : B7 Transmit After adjustment, [UP] key : Push	Through type power meter 150Ωdummy	Rear panel	ANT	Front panel	[RIT/XIT] knob	40W	±3.0W
11. SWR meter adj.	1) Menu No. : B8 Transmit					[UP] key	[UP] key : Push	
12. FM DEV adj.	1) Menu No. : B9 AG output : 1kHz/30mV Transmit	Power meter Linear detector AG	Rear panel Front panel	ANT MIC	Front panel	[RIT/XIT] knob	4.6kHz	±0.1kHz
13. FM MIC sense check	1) Menu No. : B9 AG output : 1kHz/3mV **E,X** AG output : 1kHz/5mV **K,P,M**						Check	3.0kHz ± 0.5kHz
• Writing data : After items 4 to 13 have been adjusted: 1) Menu No. : BA 2) [UP] key : Push once time Display "rEAdy" → "good" (If "nG" is displayed, enter data again.) 3) [CLR] key : Push once time (Adjustment mode terminated)								
14. Spurious adj.	1) Display f. : 24.900MHz MODE : CW Transmit	Power meter Spectrum analyzer	Rear panel	ANT	RF	VR2	±1.65MHz spurious level MIN.	–60dB or less
15. Monitor level check	1) Display f. : 21.100MHz MODE : USB [MONI] key : ON [MONI] VR : Center [MIC] VR : Center [AF] VR : MIN AG output : 1kHz/10mV Transmit	Power meter AF V.M Oscilloscope DM. SP AG AF V.M	Rear panel Front panel	ANT EXT. SP MIC	Front panel	Display	Check	0.2V ± 0.05V

ADJUSTMENT

Item	Condition	Measurement			Adjustment			Specifications/Remarks
		Test-equipment	Unit	Terminal	Unit	Parts	Method	
16. Processor check	1) Display f. : 14.200MHz MODE : USB [MIC] VR : Center [PROC] key : ON [METER] : COMP AG output : 1kHz/10mV	Power meter AG AF V.M	Rear panel Front panel	ANT MIC	Front panel	Display	Check	COMP meter : 15~25dB
	2) AG output : 1kHz/1mV							COMP meter : 1dot light
17. Sidetone check	1) Display f. : 14.200MHz MODE : CW [MONI] VR : Center Key down	AF V.M Oscilloscope DM. SP Electronic keyer jig	Rear panel	EXT. SP KEY			Check	0.63V ± 0.3V
18. CW break-in check	1) Display f. : 14.200MHz MODE : CW [VOX] key : ON [FULL/SEMI] key : FULL	Power meter Oscilloscope Electronic keyer jig	Rear panel	ANT KEY			Electronic keyer jig : Key down	Full break-in operation (When the key is turned OFF, the receive mode returns immediately.)
	2) [FULL/SEMI] key : SEMI [DELAY] knob : Center							Semi break-in operation (When the key is turned OFF, the receive mode returns after a while.)
19. DRU check (equipped on DRU-3)	1) Connect a microphone to the MIC jack. MODE : USB/LSB [MIC] VR : Center [REC] key : Push						Hold down the [CH1], and talk into the microphone.	Can be recorded for about 15 seconds.
							Release and press the [CH1] key again.	The recorded voice must be played back.
20. Sub tone check	1) Display f. : 29.100MHz MODE : FM MIC jack : 600Ω terminated [A=B], [TX-B] key : Push [M.IN] key : Push two times [RX-M.CH] : Push Transmit	Power meter Linear detector Oscilloscope f. counter Microphone	Rear panel Front panel	ANT MIC			Check	DEV : ±0.5~1.0kHz Tone f. : 88.2~88.7Hz
21. TX frequency check	1) Display f. : 29.100MHz MODE : CW Transmit							29.100.000MHz ± 145Hz
22. TX frequency characteristic check	1) Display f. : 14.200MHz MODE : USB/LSB MIC jack : Connect to AG AG output : 1kHz/5mV 400Hz/5mV 2.6kHz/5mV Transmit	Power meter Oscilloscope AG AF V.M	Rear panel Front panel	ANT MIC			a. Set AG to 1.0kHz and turn the [MIC] VR to set to 100W. b. Change the AG frequency and measure the difference between the power levels at 1.0kHz and at another frequency. c. Take a measurement for each USB and LSB.	Within 6dB

ADJUSTMENT

Item	Condition	Measurement			Adjustment			Specifications/Remarks
		Test-equipment	Unit	Terminal	Unit	Parts	Method	
23. Processor check	1) Display f. : 14.200MHz MODE : USB [PROC] key : ON [METER] key : Push [PROC] VR : MIN MIC jack : Connect to AG AG output : 1.0kHz/1mV Transmit						Change [PROC] VR so that the first segment on the COMP meter lights.	
	2) AG output : 1.0kHz /10mV (20dB UP) Transmit						Check	COMP meter : within 15~25dB
24. AT	1) Display f. : Indicated below MODE : CW [METER] : SWR [THRU/AUTO] : AUTO Transmit After checked retuen to receive mode.	Through type power meter 150Ωdummy	Rear panel	ANT	Front panel	Display	Check	ON AIR LED light. AT TUNE LED light. When tuning completed, LEDs off.
	2) [AT TUNE] key : ON	Frequency 1.910MHz 3.500 3.700 7.000 10.100 14.000 18.100 21.000 24.900 29.700			AT	TC1	Note : When 29.700MHz and SWR 1.0 to 1.3, variiable capacitor has flutters so that it does not stop, adjust the TC1 at which SWR 1.2 or less is acceptable.	Begins AT tuning after entering the transmission state. This should stop within roughly 6 seconds. SWR : 1.2 or less Power : 70W or more

Adjustment Points

■ Side view

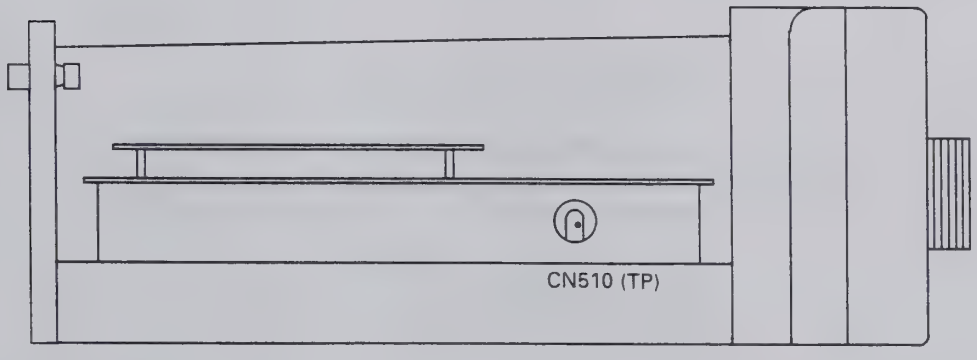

ADJUSTMENT

■ Upper view

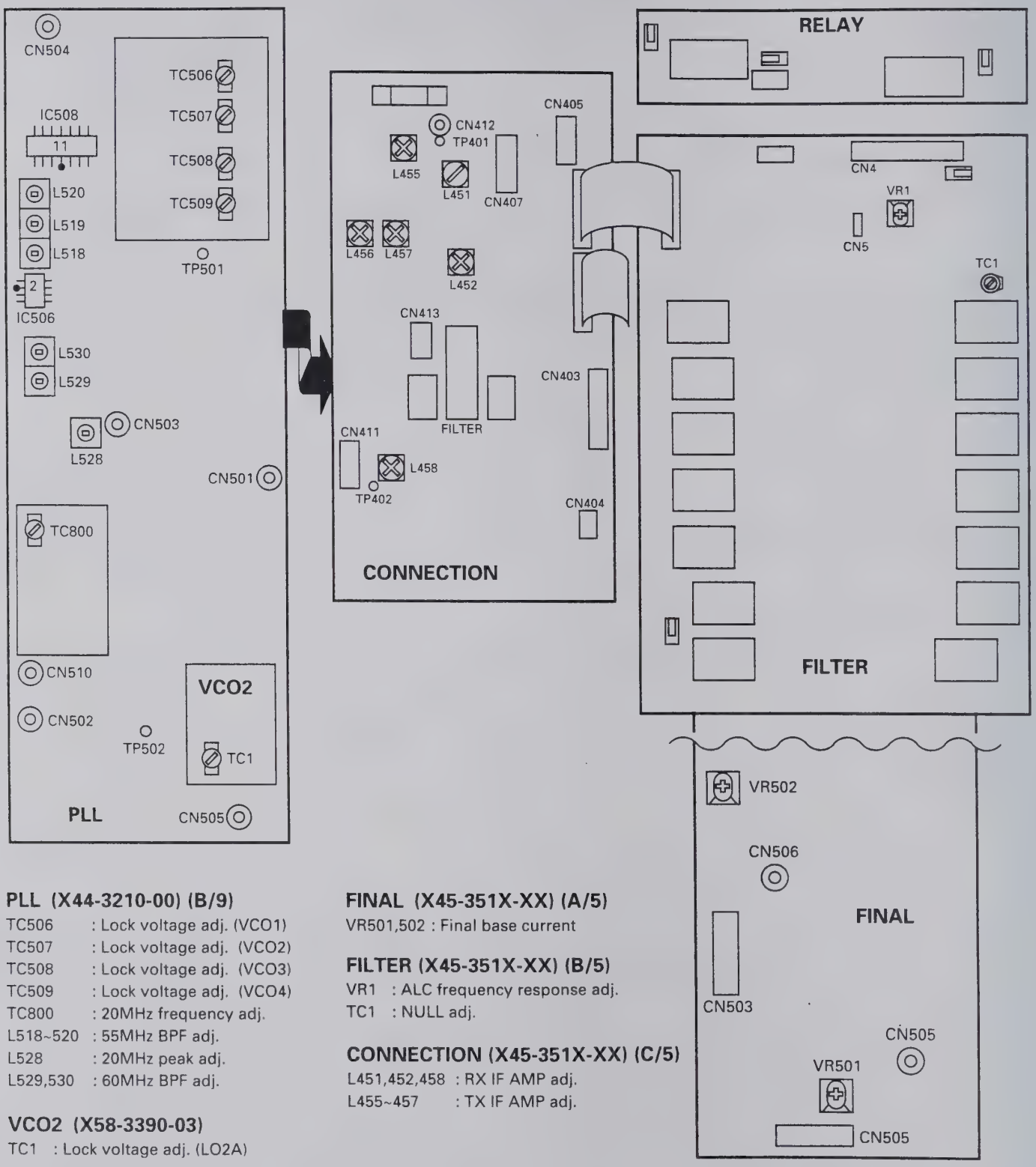

PLL (X44-3210-00) (B/9)

TC506 : Lock voltage adj. (VCO1)
TC507 : Lock voltage adj. (VCO2)
TC508 : Lock voltage adj. (VCO3)
TC509 : Lock voltage adj. (VCO4)
TC800 : 20MHz frequency adj.
L518~520 : 55MHz BPF adj.
L528 : 20MHz peak adj.
L529,530 : 60MHz BPF adj.

VCO2 (X58-3390-03)

TC1 : Lock voltage adj. (LO2A)

FINAL (X45-351X-XX) (A/5)

VR501,502 : Final base current

FILTER (X45-351X-XX) (B/5)

VR1 : ALC frequency response adj.
TC1 : NULL adj.

CONNECTION (X45-351X-XX) (C/5)

L451,452,458 : RX IF AMP adj.
L455~457 : TX IF AMP adj.

ADJUSTMENT

■ **Lower view**

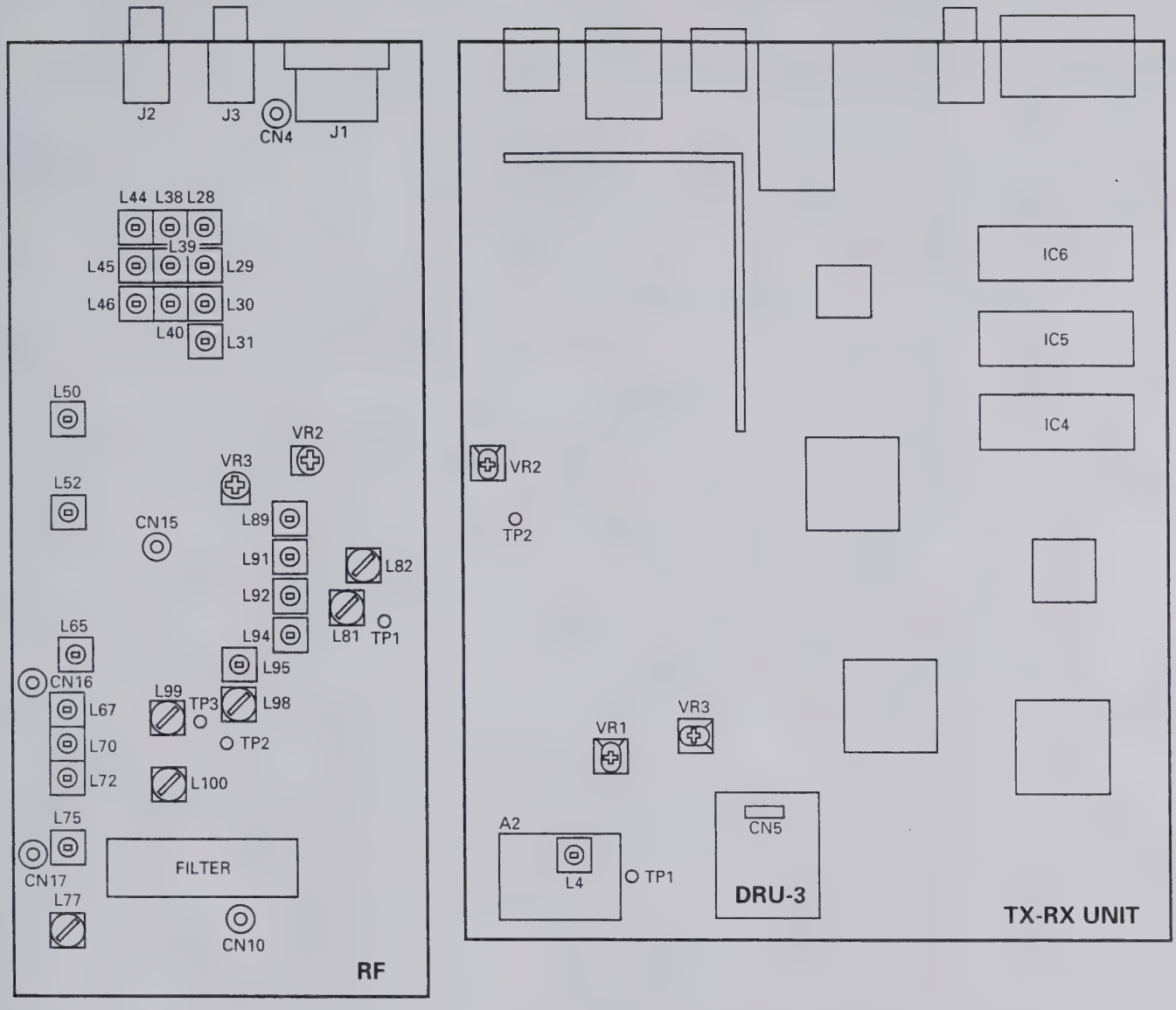

RF (X44-3210-00) (A/9)

VR2	: Spurious adj.
VR3,L89,91,92,94,95,98,99	: TX IF AMP adj.
L28~31,38~40,44~46,50,52	: BPF adj.
L65,67,70,72	: MCF adj.
L75,77	: RX IF AMP adj.
L81,82	: NB adj.
L100	: TX MCF adj.

TX-RX UNIT (X57-4620-00)

VR1	: S-meter adj.
VR2	: AGC voltage adj.
VR3	: DRU-3 recording level adj. (Adjusted to the mechanical center)
L4	: DSP PLL lock voltage adj.

TERMINAL FUNCTION

CN No.	Pin No.	Name	Function
RF UNIT (X44-3210-00) (A/9) : RF			
CN2	Coaxial	RAT	RX signal
CN4	Coaxial	DRV	TX drive signal
CN5	Coaxial	LO1	1st local oscillation 73.08~103.05MHz
CN6	Coaxial	LO2A	2nd local oscillation 64.22MHz
CN7	1	TXB	TX 8V
	2	RXB	RX 8V
	3	AGC	AGC voltage
CN10	Coaxial	TR88	RX IF output/TX IF input 8.83MHz
CN13	1	SPO	Speaker signal
	2	CKY	Keying signal
	3	AGC	AGC voltage
	4	TXC	TX : "H"
	5	RXC	RX : "H"
	6	8A	Analog 8V
	7	14S	14V-switched
	8	GND	GND
CN14	1	15K	Filter selection 15kHz
	2	3K	Filter selection 3kHz
	3	6K	Filter selection 6kHz
	4	VSF	Forward wave detection voltage
	5	VSF	Reflected wave detection voltage
	6	ALM	ALC meter output
	7	THP	Thermal protection
	8	NC	
	9	UCK2	RF serial/parallel convert clock
	10	UDA2	RF serial/parallel convert data
	11	ENR1	RF serial/parallel convertor IC1 enable
	12	ENR2	RF serial/parallel convertor IC2 enable
	13	ENR3	DAC enable
	14	NC	
	15	RBK	RF blank signal
	16	–6	–6V
	17	GND	GND
	18	NC	
	19	SS	TX/RX control signal TX : "L"
	20	NC	
J1	1	SPO	Speaker signal
	2	COM	Relay common terminal
	3	SS	TX/RX control signal
	4	MKE	TX relay close
	5	BRK	TX relay open
	6	ALC	ALC input
	7	RL	13V output when TX
J2		EXT RX	External receiver output
J3		IF OUT	SM-230
RF UNIT (X44-3210-00) (B/9) : PLL			
CN500	1	GND	GND
	2	NFMT	FM modulation on/off signal (FM TX : "L")
	3	VB3	21.489~30MHz } VCO select signal Active "H"
	4	VB2	14.489~21.489MHz
	5	VB1	7.489~14.489MHz
	6	VB0	0~7.489MHz
	7	UNL	Unlock detection output (Unlock : "H")
	8	GND	GND
	9	PLE2	PLL2 enable signal (LO2A)
	10	PLE1	PLL1 enable signal (LO1)
	11	PCK	Clock
	12	PDA	PLL, DDS data
	13	14D	14V
	14	DLE3	DDS3 enable signal (LO4)
	15	DLE2	DDS2 enable signal (LO3)
	16	DLE1	DDS1 enable signal (LO1)
	17	TXC	PLL DDS latch select signal (TX : "H")
	18	GND	GND
	19	9P	9V
	20	5P	5V
CN501	1	GND	GND
	2	LO4	DDS3 output
CN502	Coaxial	LO3	DDS2 output (8.375MHz)
CN503	Coaxial	REF	Reference signal output for TX-RX unit (20MHz)
CN504	Coaxial	LO1	LO1 output (73.08~103.05MHz)
CN505	Coaxial	LO2A	LO2A output (64.22MHz)
CN506	1	FMD	FM modulation signal
	2	GND	GND
	3	GND	GND
RF UNIT (X44-3210-00) (D/9) : PHONE			
CN901	1	SPI1	Phone jack through
	2	SPG	GND
	3	SPO1	Phone jack output
RF UNIT (X44-3210-00) (E, F, G, H, I/9) : VR			
CN903	1	DGND	Digital GND
	2	VPWR	MIC/PWR VR 1
	3	VMIC	MIC/PWR VR 2
	4	VDLY	CAR/DELAY VR 1
	5	VCAR	CAR/DELAY VR 2
	6	5D	5V
CN904	1	DGND	Digital GND
	2	VMON	PROC/MONI VR 1
	3	VPRC	PROC/MONI VR 2
	4	VKEY	AGC/KEY VR 1
	5	VAGC	AGC/KEY VR 2
	6	5D	5V
CN905	1	NC	
	2	WENB	Width encoder B
	3	WENA	Width encoder A
	4	SENB	Shift encoder B
	5	SENA	Shift encoder A
	6	GND	GND
CN906	1	GND	GND
	2	VRF	AF/RF VR 1
	3	VAF	AF/RF VR 2
	4	RENA	RIT encoder A
	5	RENB	RIT encoder B
	6	5D	5V
CN907	1	GND	GND
	2	VSQL	NB/SQL VR 1
	3	VNB	NB/SQL VR 2
	4	CENA	M.CH encoder A
	5	CENB	M.CH encoder B
	6	5D	5V
FINAL UNIT (X45-351X-XX) (A/5) : FINAL			
CN501	Coaxial	DRV	Drive input (From RF)
CN502	Coaxial	PO	TX signal output (To FILTER)
CN503	1	14S	13.8V
	2	14S	13.8V
	3	TXB	TX 13.8V
	4	GND	GND
	5	GND	GND
CN504	1	14V	13.8V
	2	14V	13.8V
	3	GND	GND

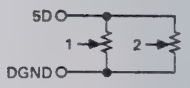

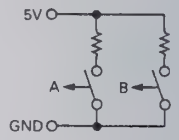

TERMINAL FUNCTION

CN No.	Pin No.	Name	Function
W501	Board in	14F	Power supply 13.8V connecting harness
		14F	Power supply 13.8V connecting harness
		GND	Power supply 13.8V connecting harness
		GND	Power supply 13.8V connect ing harness
FIANL UNIT (X45-351X-XX) (B/5) : FILTER			
CN1	Coaxial	PO	Filter input signal
CN2	Coaxial	ATO	TX output signal (To AT)
CN3	1	8A	8V
	2	GND	GND
	3	GND	GND
	4	14S	14V
	5	14S	14V
	6	UCK2	Shift register clock
	7	UDA2	Shift register data
	8	ENF1	Shift register enable
	9	DGND	Digital GND
	10	TXB	TX power 8V
	11	VSF	Forward wave detection voltage
	12	VSR	Reflected wave detection voltage
CN4	1	ATA	Make for AT through/on relay
	2	28AT	24.5~30MHz
	3	25AT	21.5~24.5MHz
	4	18AT	18.5~21.5MHz
	5	14AT	14.5~18.5MHz
	6	10AT	10.5~14.5MHz
	7	7AT	4.0~7.5MHz
	8	4AT	2.5~4.0MHz
	9	GND	GND
	10	14S	14V
	11	GND	GND
W1	1	RL	TX/RX select signal output
	2	ANTS	ANT 1/2 select signal output
	3	GND	GND
FINAL UNIT (X45-351X-XX) (C/5) : CONNECTION			
CN401	1	15K	455kHz filter select "L" : Filter on
	2	3K	455kHz filter select "L" : Filter on
	3	6K	455kHz filter select "L" : Filter on
	4	TT	External AT tuning control (Pass through)
	5	TS	External AT tuning control (Pass through)
	6	UCK2	Pass through
	7	UDA2	Pass through
	8	ENF1	Pass through
	9	VSF	Pass through
	10	VSR	Pass through
	11	THP	Pass through
	12	14D	14V
	13	14D	14V
	14	14V	14V
	15	14V	14V
	16	PWS	Power switch on : "H"
	17	9P	PLL power 9V
	18	5P	PLL power 5V
	19	–6	–6V output
	20	GND	GND
CN402	1	8A	8V
	2	GND	GND
	3	GND	GND
	4	14S	13.8V
	5	14S	13.8V
	6	UCK2	Pass through
	7	UDA2	Pass through
	8	ENF1	Pass through
	9	DGND	Digital GND
	10	TXB	TX power 8V
	11	VSF	Pass through
	12	VSR	Pass through
CN403	1	14A	13.8V
	2	14S	13.8V
	3	8D	Digital 8V
	4	8A	Analog 8V
	5	APG	GND
	6	SPO3	Speaker output signal input
	7	SPG	Speaker GND
CN404	1	SPG	Speaker GND
	2	SP	Speaker output signal
CN405	1	14S	13.8V
	2	14S	13.8V
	3	AGND	Analog GND
	4	AGND	Analog GND
CN406	1	THP	Pass through
	2	TXB	Pass through
	3	14D	13.8V
	4	8D	Digital 8V
	5	14D	13.8V
	6	8A	Analog 8V
	7	GND	GND
	8	GND	GND
	9	14S	13.8V
	10	14S	13.8V
	11	14S	13.8V
	12	PSW	Power switch on : "H"
	13	14V	13.8V
CN407	1	14S	13.8V
	2	AGND	Analog GND
	3	TT	Pass through
	4	TS	Pass through
	5	GND	GND
CN410	Coaxial	LO3	Local LO3 8.375MHz (From PLL)
CN411	1	TIF	TX IF input
	2	GND	GND
	3	RIF	RX IF output
	4	GND	GND
CN412	Coaxial	TR88	8.83MHz
CN413	1	TXB	TX power 8V
	2	RXB	RX power 8V
	3	AGC	AGC line
FINAL UNIT (X45-351X-XX) (D/5) : AVR			
CN601	1	14V	13.8V
	2	14V	13.8V
	3	GND	GND
CN602	1	14S	13.8V
	2	14S	13.8V
	3	AGND	Analog GND
	4	AGND	Analog GND
CN603	1	THP	Thermal protection on : "H"
	2	TXB	TX 13.8V
	3	14D	13.8V
	4	8D	Digital 8V
	5	14D	Digital 13.8V
	6	8A	Analog 8V
	7	GND	GND
	8	GND	GND
	9	14S	13.8V
	10	14S	13.8V

AT coil tap band data

TERMINAL FUNCTION

CN No.	Pin No.	Name	Function
	11	14S	13.8V
	12	PSW	Power switch on : "H"
	13	14V	13.8V
CN604	1	14S	13.8V
	2	14S	13.8V
	3	TXB	TX 13.8V
	4	GND	GND
	5	GND	GND
CN605	1	MOT+	Moter drive +
	2	MOT –	Motor drive –
FINAL UNIT (X45-351X-XX) (E/5) : RELAY			
CN301	1	RL	TX/RX select signal input
	2	ANTS	ANT 1/2 select signal input
	3	GND	GND
CN302	Coaxial	ATO	TX signal input (From FILTER)
CN303	Coaxial	RAT	RX signal output (To RF)
CN304	Coaxial	AT1	Input/output to AT (RX : Output, TX : Input)
CN305	Coaxial	AT2	Input/output to AT (RX : Input, TX : Output)
CN306	TP		ANT1 GND
CN307	TP		ANT2 GND
W301	TP		ANT1 signal line
W303	TP		ANT2 signal line
AT UNIT (X53-3340-02)			
CN1	Coaxial	AT1	AT input
CN2	Coaxial	AT2	AT output
CN3	1	VRE	+5V reference voltage for A/D
	2	POD2	VC2 position detection, VR101 output
	3	GND	GND
	4	POD1	VC1 position detection, VR102 output
CN4	1	NC	
	2	M2–	Motor 2 drive –
	3	M2+	Motor 2 drive +
	4	M1–	Motor 1 drive –
	5	M1+	Motor 1 drive +
CN5	1	NC	
	2	F15	Power line 11~14V
	3	GND	GND
CN6	1	ATA	Make for AT through/on relay "L" : On
	2	NC	
CN7	1	ATG	GND for discriminating that is connected to microcomputer
	2	SPED	Motor speed control pulse
	3	APRE	Control selection "H" : Preset type, "L" : Auto tuning type
	4	VRE	+5V reference voltage for A/D
	5	PR22	Motor 2 control signal
	6	PR21	Motor 2 control signal
	7	POD2	VC2 position detection
	8	PR12	Motor 1 control signal
	9	PR11	Motor 1 control signal
	10	POD1	VC1 position detection
	11	GND	GND
CN101	1	28AT	24.5~30MHz
	2	15AT	21.5~24.5MHz
	3	NC	
	4	18AT	18.5~21.5MHz
	5	14AT	14.5~18.5MHz
	6	10AT	10.5~14.5MHz
	7	7AT	4.0~7.5MHz
	8	4AT	2.5~4.0MHz

AT coil tap band data

CN No.	Pin No.	Name	Function
	9	GND	GND
CONTROL UNIT (X53-356X-XX) (A/4) : CONTROL			
CN1	1	GND	GND
	2	NFMT	Not FM TX signal
	3	VB3	VCO selest signal
	4	VB2	VCO select signal
	5	VB1	VCO select signal
	6	VB0	VCO select signal
	7	UNL	PLL unlock signal
	8	GND	GND
	9	PLE2	PLL2 enable signal
	10	PLE1	PLL1 enable signal
	11	PCK	PLL serial clock
	12	PDA	PLL serial data
	13	14D	Digital 13.8V
	14	DLE3	DDS3 enable signal
	15	DLE2	DDS2 enable signal
	16	DLE1	DDS1 enable signal
	17	TXC	TX control signal
	18	GND	GND
	19	9P	PLL power 9V (Pass through)
	20	5P	PLL power 5V (Pass through)
CN2	1	GND	GND
	2	–6	–6V (Pass through)
	3	5P	PLL power 5V (Pass through)
	4	9P	PLL power 9V (Pass through)
	5	PSW	Power control signal
	6	14V	13.8V
	7	14V	13.8V
	8	14D	Digital 13.8V
	9	14D	Digital 13.8V
	10	THP	Thermal protection
	11	VSR	Reflected wave analog voltage
	12	VSF	Forward wave analog voltage
	13	ENF1	Enable for IC1 on FILTER board
	14	UDA2	Serial data for IC1 on FILTER board
	15	UCK2	Serial clock for IC1 on FILTER board
	16	TS	AT-300 control signal
	17	TT	AT-300 control signal
	18	6K	6kHz filter select signal
	19	3K	3kHz filter select signal
	20	15K	15kHz filter select signal
CN3	1	5D	Digital 5V
	2	MENA	Main encoder pulse A
	3	MENB	Main encoder pulse B
	4	DGND	Digital GND
CN4	1	NC	
	2	NC	
	3	SPED	Internal AT speed control signal
	4	APRE	Internal AT control select signal
	5	VRE	Reference voltage for A/D convertor
	6	PR22	Motor 2 control signal
	7	PR21	Motor 2 control signal
	8	POD2	Motor 2 position voltage
	9	PR12	Motor 1 control signal
	10	PR11	Motor 1 control signal
	11	POD1	Motor 1 position voltage
	12	GND	GND
CN5	1	GND	GND
	2	CTS	Communication inhibit signal from TS-870S
	3	RTS	Communication inhibit signal from personal computer
	4	RXD	TX data from TS-870S
	5	TXD	RX data from personal computer

TERMINAL FUNCTION

CN No.	Pin No.	Name	Function
	6	KEYS	Key jack sensing signal
	7	DASH	Electronic keyer dash signal
	8	DOT	Electronic keyer dot signal
	9	GND	GND
	10	H0	DSP control data bus
	11	H1	DSP control data bus
	12	H2	DSP control data bus
	13	H3	DSP control data bus
	14	H4	DSP control data bus
	15	H5	DSP control data bus
	16	H6	DSP control data bus
	17	H7	DSP control data bus
	18	HENA	DSP A enable signal
	19	HENB	DSP B enable signal
	20	HRW	DSP read/write control signal
CN6	1	GND	GND
	2	HA0	DSP control address bus
	3	HA1	DSP control address bus
	4	HA2	DSP control address bus
	5	GND	GND
	6	BEEP	Beep control signal
	7	MD	Microphone down signal
	8	MU	Microphone up signal
	9	SS	Standby switch
	10	GND	GND
	11	KEY	Key down signal
	12	DRST	DSP reset signal
	13	CKY	TX wave control signal
	14	RXC	RX control signal
	15	TXC	TX control signal
	16	AMUT	AF mute signal
	17	VCEN	TX-RX unit IC26 enable
	18	UCK2	TX-RX unit serial clock
	19	UDA2	TX-RX unit serial data
	20	DREN	DRU-3 control enable signal
	21	PLUL	TX-RX unit PLL unlock signal
	22	PLEN	TX-RX unit PLL control enable signal
	23	EOM	DRU-3 end of message
	24	VBSY	VS-2 busy signal
	25	STR	VS-2 synthesize control signal
	26	GND	GND
CN7	1	5D	Digital 5V
	2	VAGC	AGC VR analog voltage
	3	VKEY	KEY VR analog voltage
	4	VPRC	PROC VR analog voltage
	5	VMON	MONI VR analog voltage
	6	DGND	Digital GND
	7	NC	
	8	5D	Digital 5V
	9	VCAR	CAR VR analog voltage
	10	VDLY	DELAY VR analog voltage
	11	VMIC	MIC VR analog voltage
	12	VPWR	PWR VR analog voltage
	13	DGND	Digital GND
CN8	1	5D	Digital 5V
	2	14D	Digital 13.8V
	3	14D	Digital 13.8V
	4	ENL2	LCD driver control enable signal
	5	ENL3	LCD driver control enable signal
	6	UDA1	LCD driver control serial data
	7	UCK1	LCD driver control serial clock
	8	BLANK	LCD goes off control signal
	9	DIM	LCD dimmer control signal
	10	GND	GND

CN No.	Pin No.	Name	Function
CN9	1	BLNK	LED goes off control signal
	2	K0	Key input 0
	3	K1	Key input 1
	4	K2	Key input 2
	5	K3	Key input 3
	6	K4	Key input 4
	7	K5	Key input 5
	8	K6	key input 6
	9	K7	Key input 7
	10	PSW	Power switch input signal
	11	ENL4	Enable for IC501 on SW board
	12	ENL1	Enable for IC502~504 on SW board
	13	UDA1	Serial data for SW board
	14	UCK1	Serial clock for SW board
	15	LATC	AT tune LED control signal
	16	TXC	TX control signal (TX LED control)
	17	RES	IC501~504 reset signal
	18	5V	5V
	19	5D	Digital 5V
	20	DGND	Digital GND
CN10	1	NC	
	2	WENB	Width encoder pulse B
	3	WEBA	Width encoder pulse A
	4	SENB	Shift encoder pulse B
	5	SENA	Shift encoder pulse A
	6	GND	GND
	7	NC	
	8	5D	Digital 5V
	9	RENB	RIT encoder pulse B
	10	RENA	RIT encoder pulse A
	11	VAF	AF VR analog voltage
	12	VRF	RF VR analog voltage
	13	GND	GND
	14	NC	
	15	5D	Digital 5V
	16	CENB	Click encoder pulse B
	17	CENA	Click encoder pulse A
	18	VNB	NB VR analog voltage
	19	VSQL	SQL VR analog voltage
	20	GND	GND
CN11	1	NC	
	2	SS	Standby switch
	3	NC	
	4	GND	GND
	5	–6	–6V
	6	RBK	RF mute signal
	7	NC	
	8	ENR3	Enable for IC7 on RF board
	9	ENR2	Enable for IC2 on RF board
	10	ENR1	Enable for IC1 on RF board
	11	UDA2	Serial data for RF board
	12	UCK2	Serial clock for RF board
	13	NC	
	14	THP	Thermal protection
	15	ALM	ALC meter analog voltage
	16	VSR	Reflected wave analog voltage
	17	VSF	Forward wave analog voltage
	18	6K	6kHz filter select signal
	19	3K	3kHz filter select signal
	20	15K	15kHz filter select signal
CONTROL UNIT (X53-356X-XX) (B/4) : SW			
CN501	1	DGND	Digital GND
	2	5D	Digital 5V

TERMINAL FUNCTION

CN No.	Pin No.	Name	Function
	3	5V	5V
	4	RES	IC501~504 reset signal
	5	TXC	TX control signal (TX LED control)
	6	LATC	AT tune LED control signal
	7	UCK1	Serial clock
	8	UDA1	Serial data
	9	ENL1	IC502~504 enable
	10	ENL4	IC501 enalbe
	11	PSW	Power switch output signal
	12	K7	Key output 7
	13	K6	Key output 6
	14	K5	Key output 5
	15	K4	Key output 4
	16	K3	Key output 3
	17	K2	Key output 2
	18	K1	Key output 1
	19	K0	Key output 0
	20	BLNK	LED goes off control signal
CONTROL UNIT (X53-356X-XX) (D/4) : MIC			
CN902	1	SS	Standby switch
	2	MD	Microphone down signal
	3	MU	Microphone up signal
	4	8M	8V for microphone
	5	MCG	GND
	6	MSG	MIC GND
	7	MIC	Microphone signal output
TX-RX UNIT (X57-4620-00)			
CN1	1	TIF	TX IF output (455kHz)
	2	GND	TIF GND
	3	RIF	RX IF input (455kHz)
	4	GND	RIF GND
CN3	1	LO4	Local 4 input (466kHz)
	2	GND	LO4 GND
	3	FMD	FM modulation output (To PLL)
	4	GND	FMD GND
CN4	1	MIC	Microphone signal input
	2	MSG	MIC GND
	3	MCG	GND
	4	SS	Microphone standby switch
	5	MU	Microphone up
	6	MD	Microphone down
	7	8M	8V for microphone
CN5	1	GND	GND
	2	DRMG	MIC GND
	3	DRM	Microphone signal output
	4	DRO	DRU-3 playback signal input
	5	5D	Digital 5V for DRU-3
	6	GND	GND
	7	EOM	End of message (End : "H")
	8	OVF	Over flow signal (Over flow : "L")
	9	DREN	DRU-3 enable
	10	SD	DRU-3 serial data
	11	SCK	DRU-3 clock
CN6	1	VO	Audio signal
	2	GND	GND
	3	SD	VS-2 control data
	4	SCK	VS-2 control data clock
	5	BSY	VS-2 busy
	6	STR	VS-2 synthesize control
	7	5C	5V for VS-2
	8	GND	GND
CN7	1	GND	GND

CN No.	Pin No.	Name	Function
	2	HA0	DSP data address
	3	HA1	DSP data address
	4	HA2	DSP data address
	5	GND	GND
	6	BEEP	Beep control signal
	7	MD	Microphone down signal
	8	MU	Microphone up signal
	9	SS	Standby switch
	10	GND	GND
	11	KEY	Key down signal
	12	DRST	DSP reset signal
	13	CKY	TX wave control signal
	14	RXC	RX control signal
	15	TXC	TX control signal
	16	AMUT	AF mute signal
	17	VCEN	IC26 enable
	18	UCK2	Serial clock for TX-RX unit
	19	UDA2	Serial data for TX-RX unit
	20	DREN	DRU-3 enable
	21	PLUL	TX-RX unit PLL unlock signal output
	22	PLEN	TX-RX unit PLL enable
	23	EOM	DRU-3 end of message signal output
	24	VBSY	VS-2 busy signal
	25	STR	VS-2 synthesize control signal
	26	GND	GND
CN8	1	GND	GND
	2	CTS	TX inhibit signal from TS-870S
	3	RTS	TX inhibit signal from personal computer
	4	RXD	TX data from TS-870S
	5	TXD	RX data from personal computer
	6	KEYS	Key jack sensing signal
	7	DASH	Electronic keyer dash signal
	8	DOT	Electronic keyer dot signal
	9	GND	GND
	10	H0	DSP data bus
	11	H1	DSP data bus
	12	H2	DSP data bus
	13	H3	DSP data bus
	14	H4	DSP data bus
	15	H5	DSP data bus
	16	H6	DSP data bus
	17	H7	DSP data bus
	18	HENA	DSP A enable signal
	19	HENB	DSP B enable signal
	20	HRW	DSP read/write control signal
CN9	1	14A	Analog 13.8V
	2	8D	Digital 8V
	3	14S	13.8V
	4	8A	Analog 8V
	5	APG	GND
CN10	1	SPI1	AF input when headphone through
	2	SPG	GND
	3	SPO1	Headphone AF output
CN11	1	GND	GND
	2	14S	13.8V
	3	8A	Analog 8V
	4	RXC	RX : "L"
	5	TXC	TX : "H"
	6	AGC	AGC voltage
	7	CKY	Keying signal
	8	SPO1	Speaker signal output
CN12	1	SPO3	Internal speaker AF output
	2	SPG	GND

TERMINAL FUNCTION

CN No.	Pin No.	Name	Function
CN13	Coaxial	REF	20MHz reference signal for PLL, DPS (From PLL)
J1	1	GND	GND
EXT.SP	2	NC	
	3	NC	
	4		External speaker signal output
	5		Signal input when external speaker not connected
J2	1	GND	GND
Paddle	2	NC	
	3	NC	
	4	NC	
	5	DASH	Electronic keyer dash signal
	6	DOT	Electronic keyer dot signal
	7	NC	
	8	NC	
	9	NC	
	10	KEYS	Key switch signal
	11	KEYS	Open when using paddle
J4	1		GND
RTTY	2		RTTY signal
	3		GND
	4		RTTY signal
J5	1	NC	
ACC2	2	NC	
	3	ANO	RX audio output
	4	GND	ANO GND
	5	PSQ	Squelch open : GND, Squelch close : open
	6	SMET	S-meter voltage output
	7	NC	
	8	GND	GND
	9	PKS	Standby switch when using PKD input (Front panel microphone input is muted)
	10	NC	
	11	PKD	TX input
	12	GND	PKD GND
	13	SS	Standby switch

CN No.	Pin No.	Name	Function
J6	1	GND	GND
KEY	2	GND	GND
	3	KEYS	Key jack sensing signal
	4	NC	
	5	KEY	Key down signal
J7	1	GND	GND
COM	2	NC	
	3	TXD	RX data from personal computer
	4	RXD	TX data from TS-870S
	5	NC	
	6	NC	
	7	CTS	TX inhibit signal from TS-870S
	8	RTS	TX inhibit signal from personal computer
	9	NC	
LCD ASSY (B38-0736-05)			
CN1	1	GND	GND
	2	DIM	LCD dimmer control signal
	3	BLANK	LCD goes off control signal
	4	UCK1	LCD driver control serial clock
	5	UDA1	LCD driver control serial data
	6	ENL3	LCD driver control enable signal
	7	ENL2	LCD driver control enable signal
	8	14D	Digital 13.8V
	9	14D	Digital 13.8V
	10	5D	Digital 5V

TS-870S PC BOARD VIEWS

LCD ASSY (B38-0736-05)
Component side view

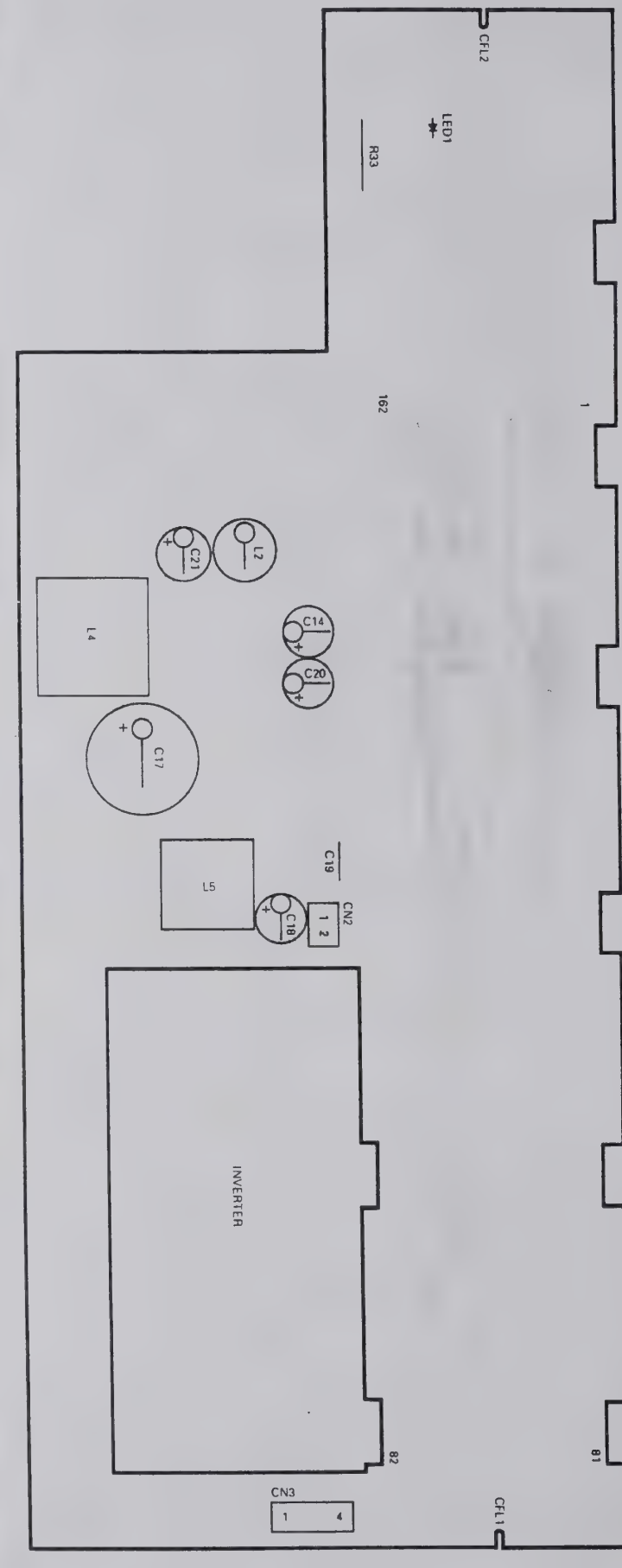

LCD ASSY (B38-0736-05)
Foil side view

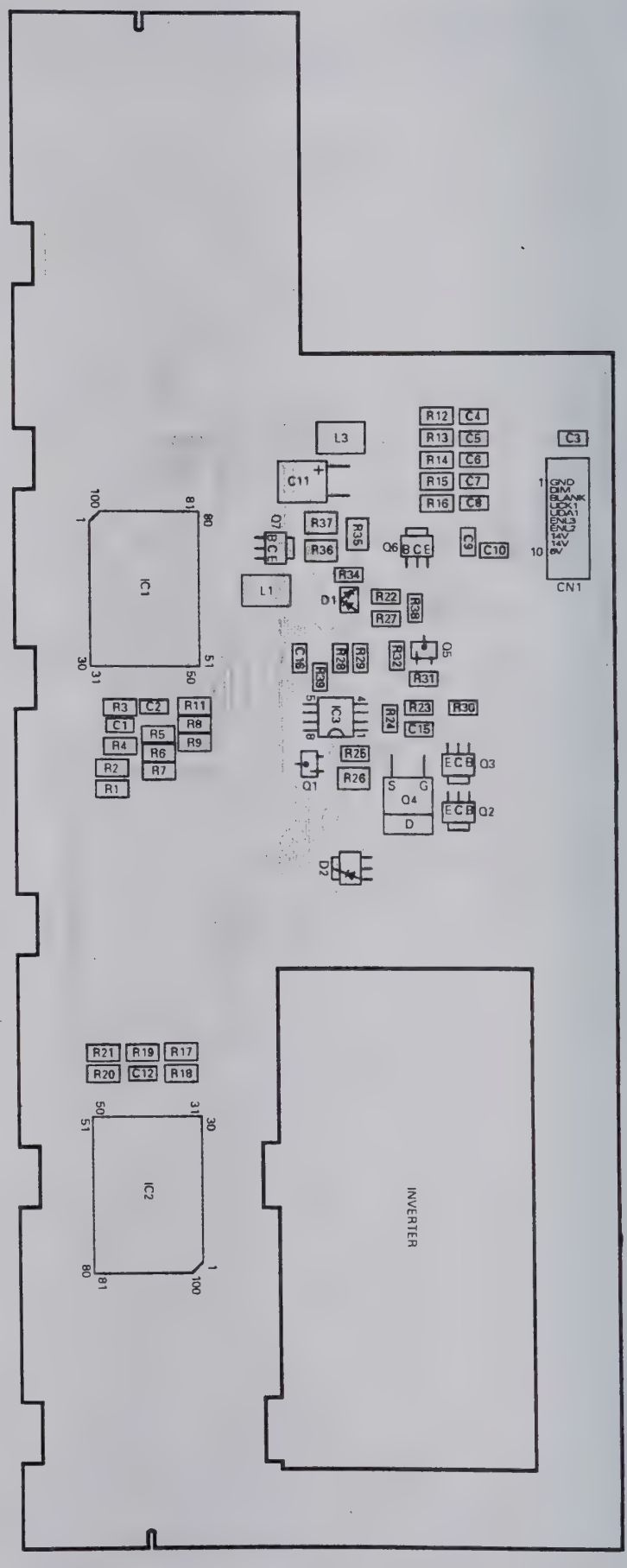

RF UNIT (X44-3210-00) (C/9)
Component side view

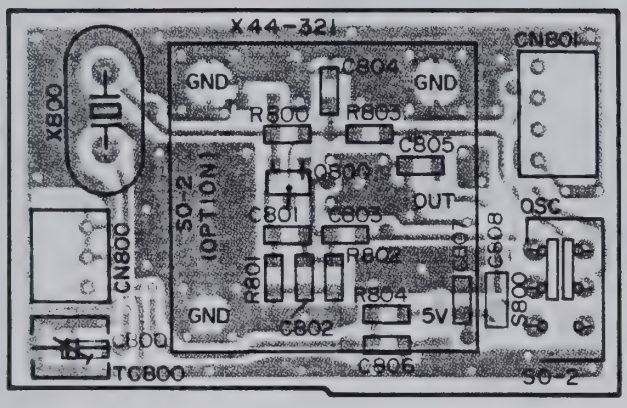

RF UNIT (X44-3210-00) (C/9)
Foil side view

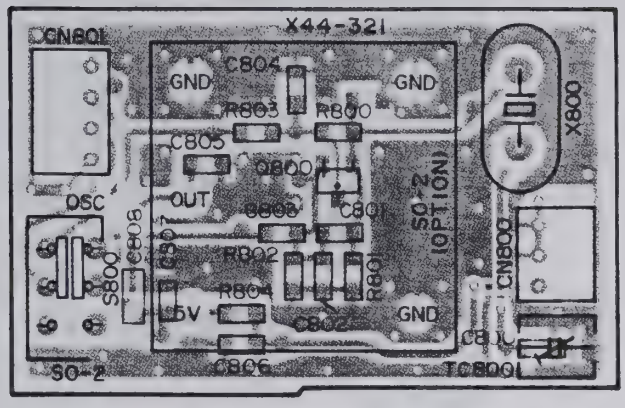

Component side
Foil side

VCO2 (X58-3390-03)
Component side view

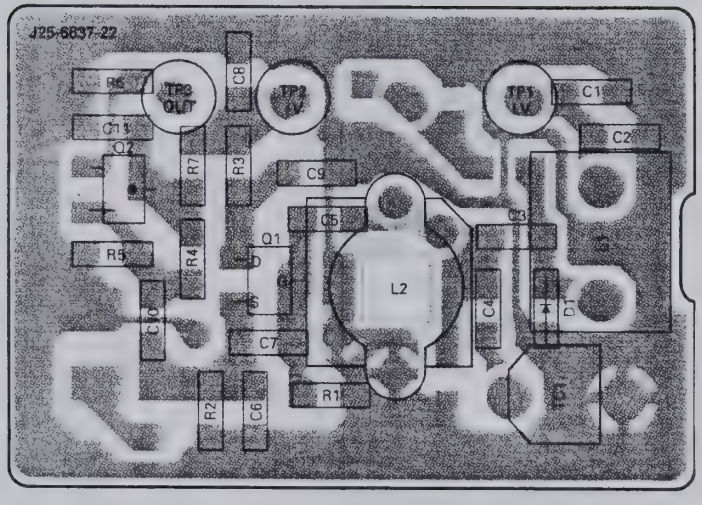

VCO2 (X58-3390-03)
Foil side view

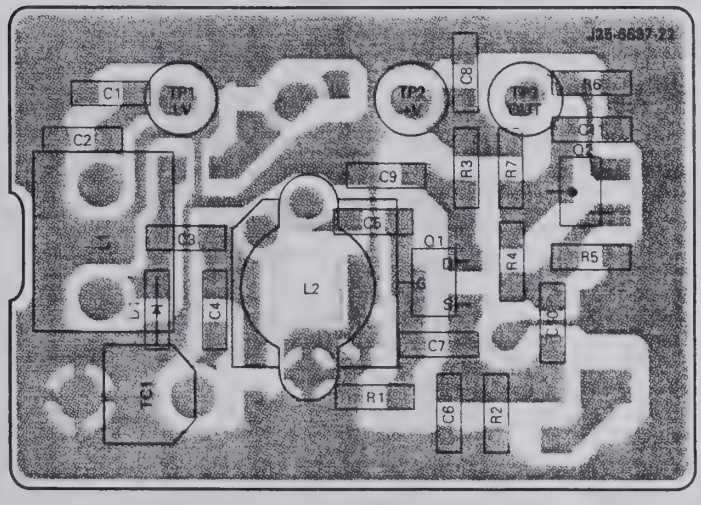

FINAL UNIT (X45-351X-XX) (A/5) : FINAL

Component side view

0-00 : K,P,M,M2,X
2-71 : E,E2,E3,E9

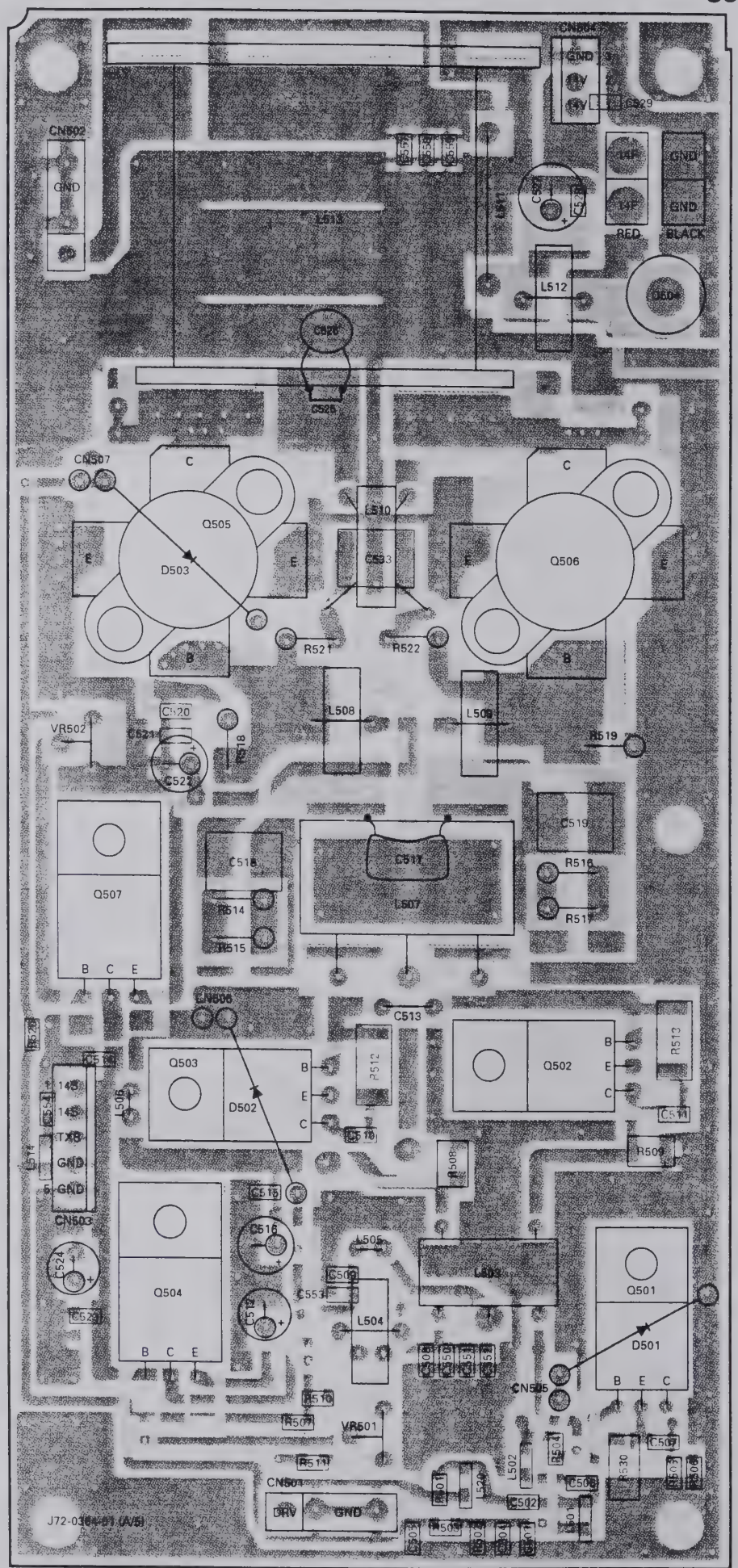

Component side
Foil side

FINAL UNIT (X45-351X-XX) (A/5) : FINAL

Foil side view

0-00 : K,P,M,M2,X

2-71 : E,E2,E3,E9

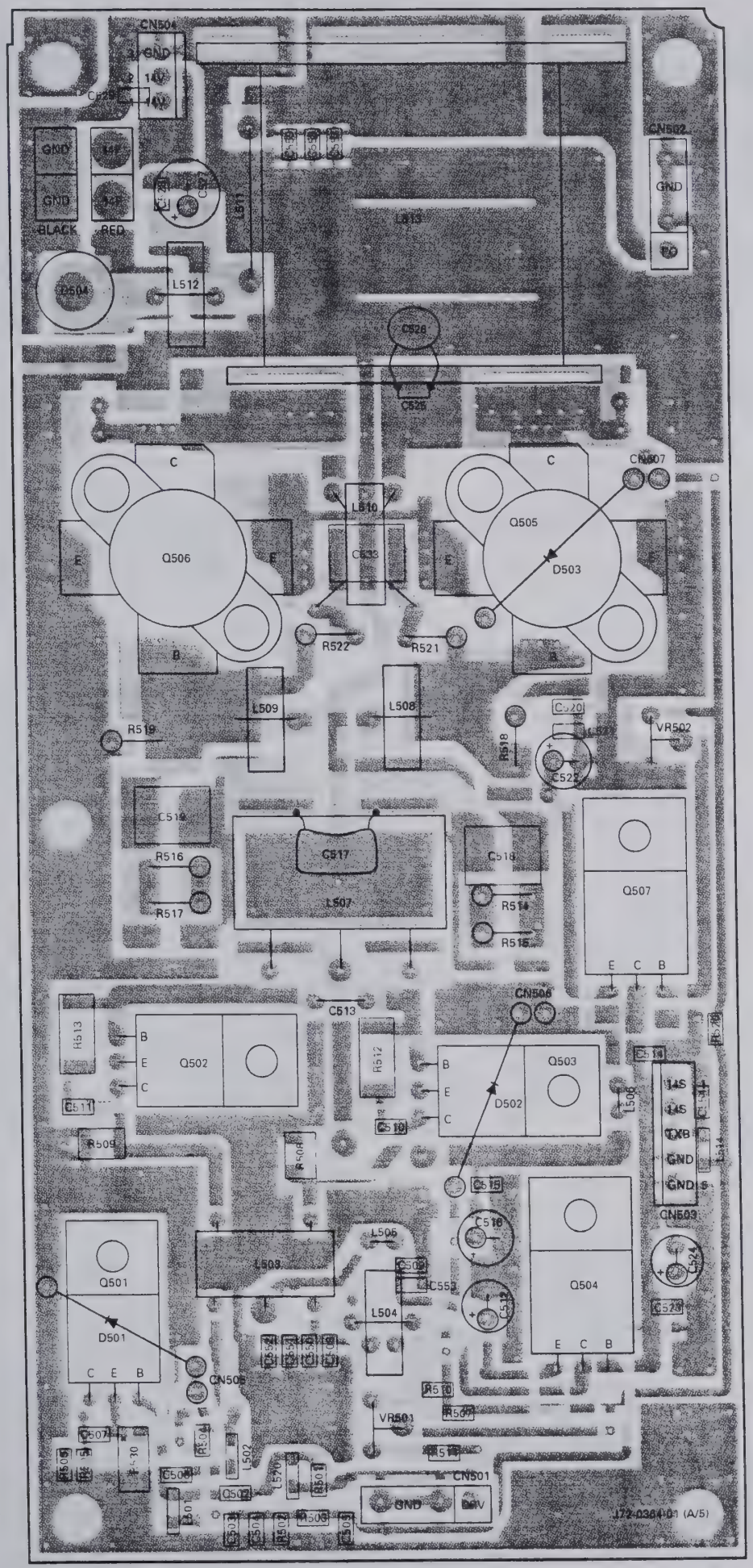

Component side

Foil side

TS-870S PC BOARD VIEW

FINAL UNIT (X45-351X-XX) (B/5) : FILTER

Component side view 0-00 : K,P,M,M2,X 2-71 : E,E2,E3,E9

☐ Component side
☐ Foil side

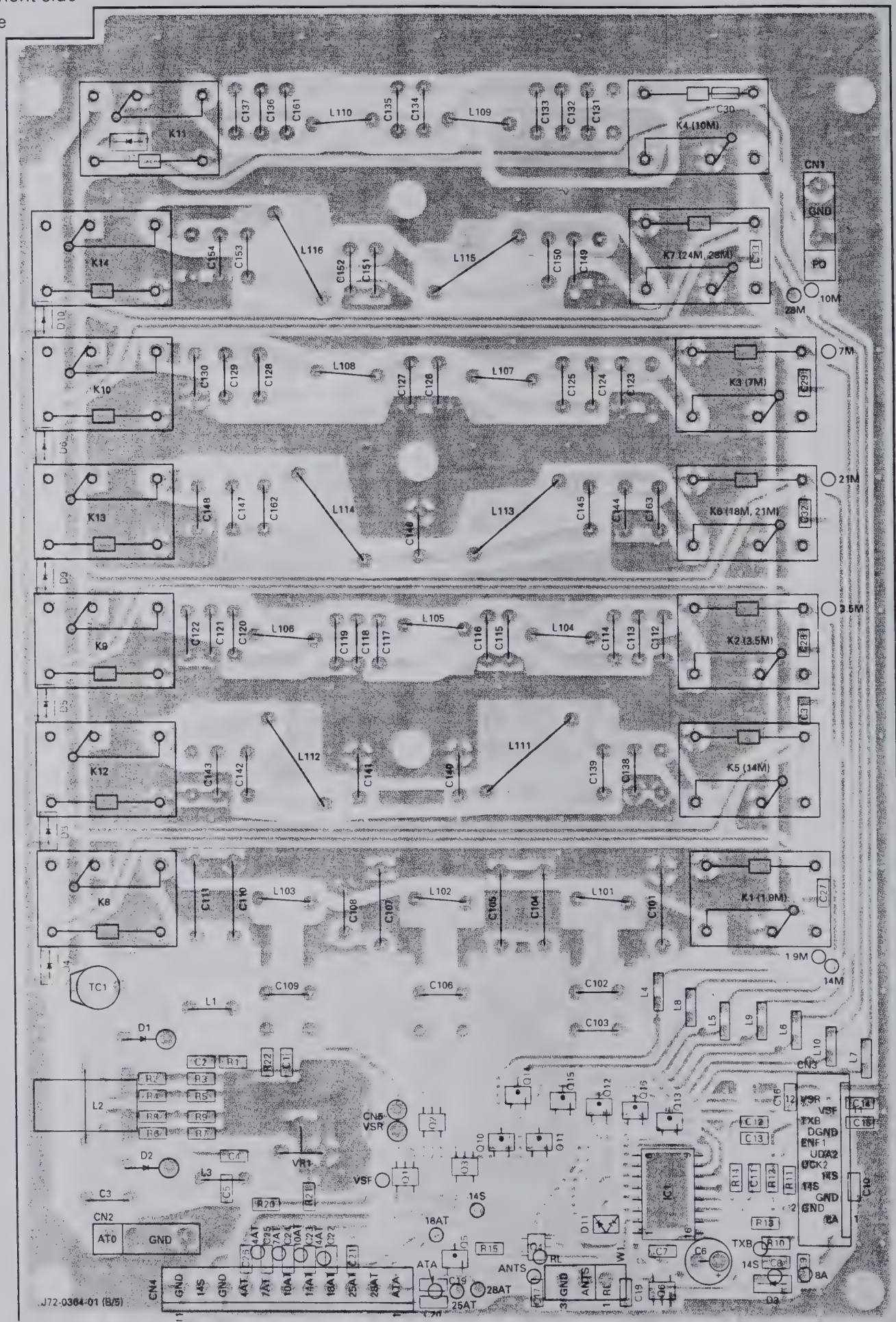

FINAL UNIT (X45-351X-XX) (B/5) : FILTER

Foil side view 0-00 : K,P,M,M2,X 2-71 : E,E2,E3,E9

Component side
Foil side

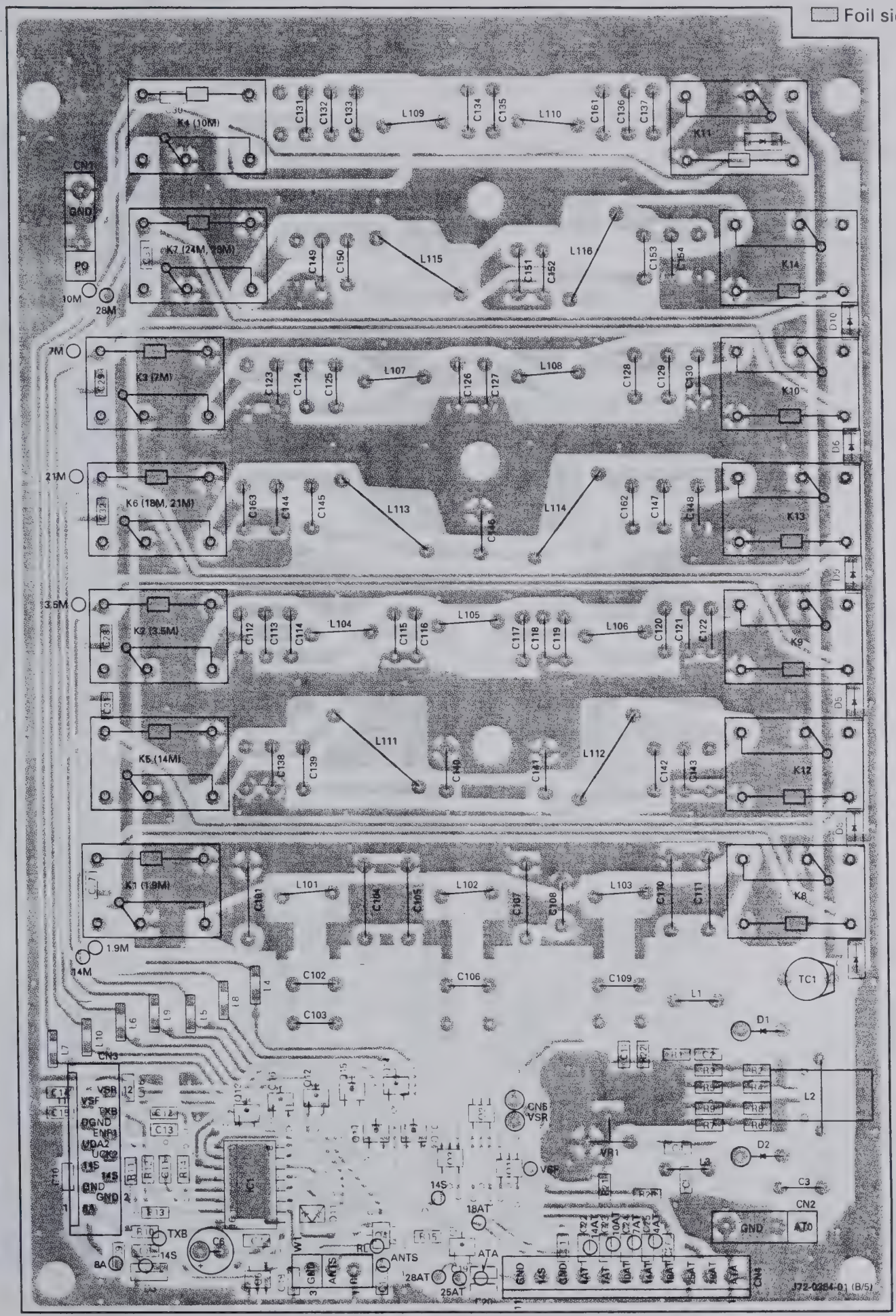

TS-870S PC BOARD VIEWS

FINAL UNIT (X45-351X-XX) (D/5) : AVR
Component side view
0-00 : K,P,M,M2,X
2-71 : E,E2,E3,E9

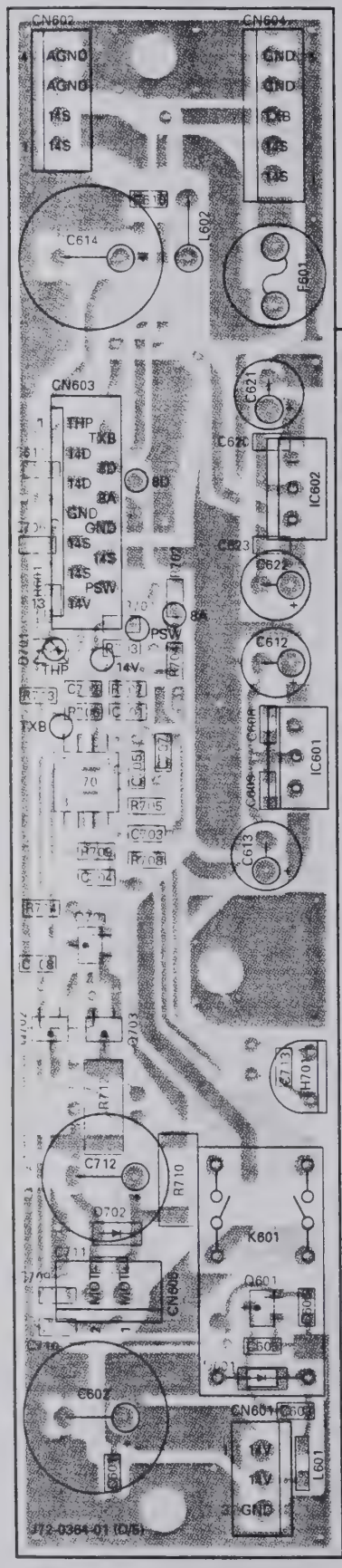

FINAL UNIT (X45-351X-XX) (E/5) : RELAY
Component side view
0-00 : K,P,M,M2,X
2-71 : E,E2,E3,E9

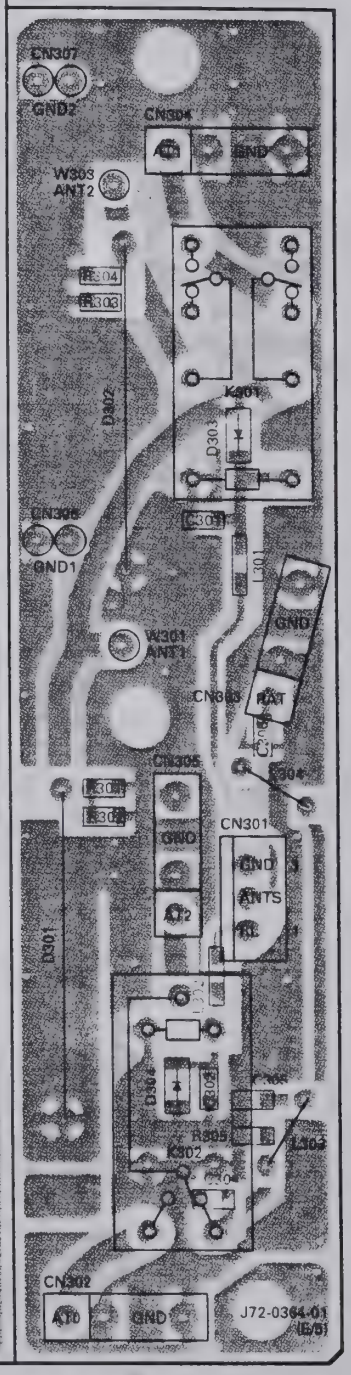

FINAL UNIT (X45-351X-XX) (E/5) : RELAY
Foil side view
0-00 : K,P,M,M2,X
2-71 : E,E2,E3,E9

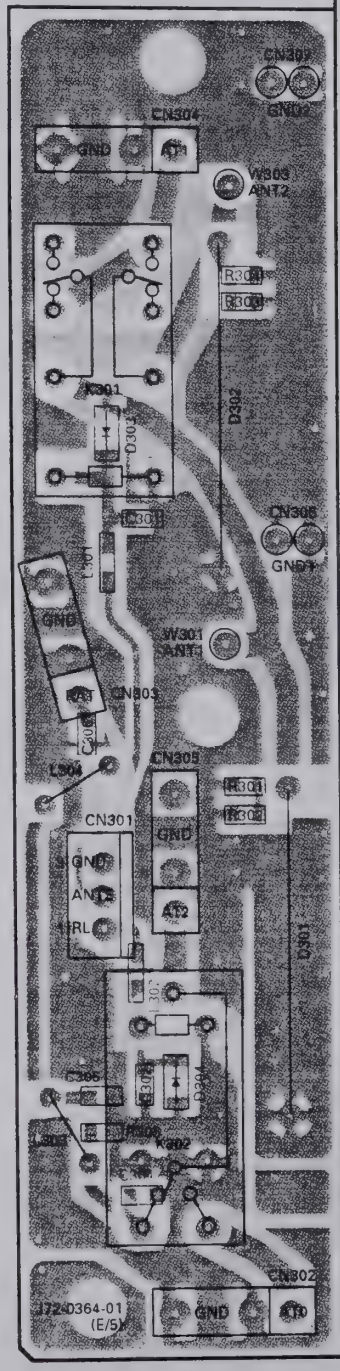

FINAL UNIT (X45-351X-XX) (D/5) : AVR
Foil side view
0-00 : K,P,M,M2,X
2-71 : E,E2,E3,E9

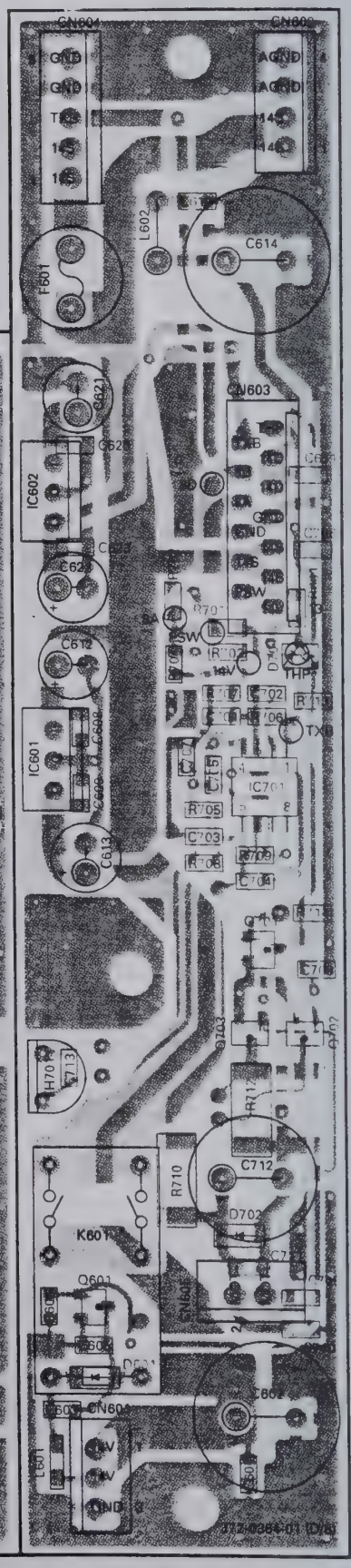

Component side
Foil side

TS-870S PC BOARD VIEWS

CONTROL UNIT (X53-356X-XX) (D/4) : MIC
Component side view
0-11 : K,P 0-21 : M 0-22 : M2 0-71 : X
2-71 : E 2-72 : E2 2-73 : E3 2-74 : E9

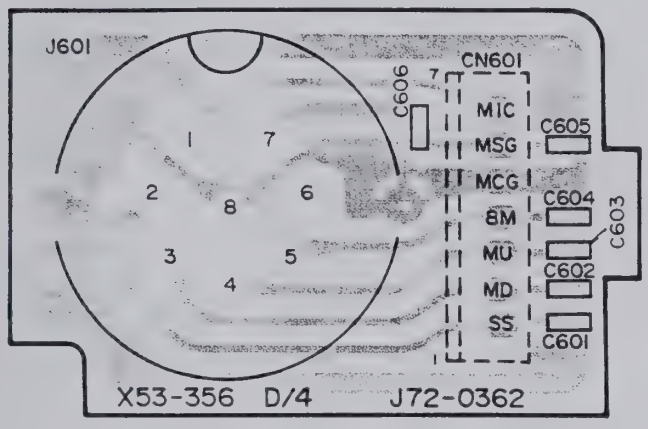

CONTROL UNIT (X53-356X-XX) (D/4) : MIC
Foil side view
0-11 : K,P 0-21 : M 0-22 : M2 0-71 : X
2-71 : E 2-72 : E2 2-73 : E3 2-74 : E9

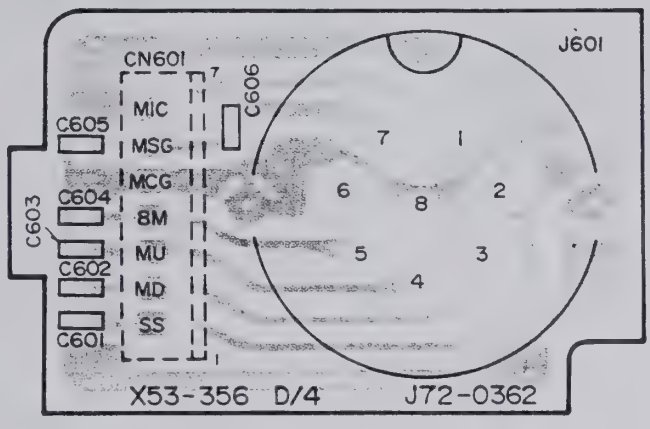

Component side
Foil side

FINAL UNIT (X45-351X-XX) (C/5) PC BOARD VIEW TS-870S

: CONNECTION Foil side view

0-00 : K,P,M,M2,X

2-71 : E,E2,E3,E9

2SA1162
2SC2712

2SD1406

2SD1624

3SK131

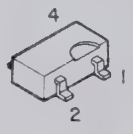

UPC7805H

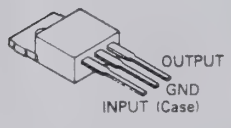

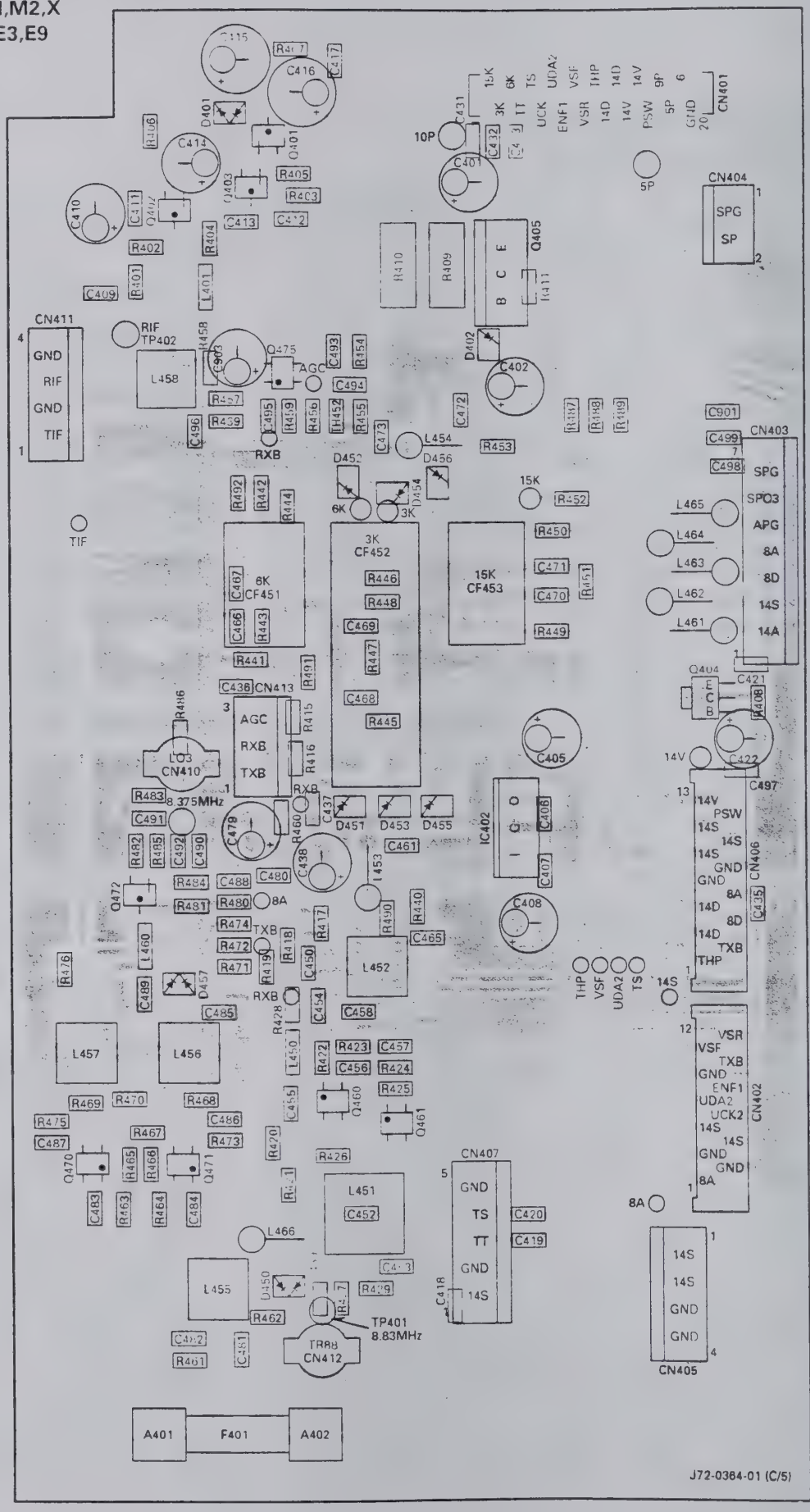

Component side
Foil side

DRU-3 (DIGITAL RECORDING UNIT)

DRU-3 Circuit Diagram

X43-3090-20

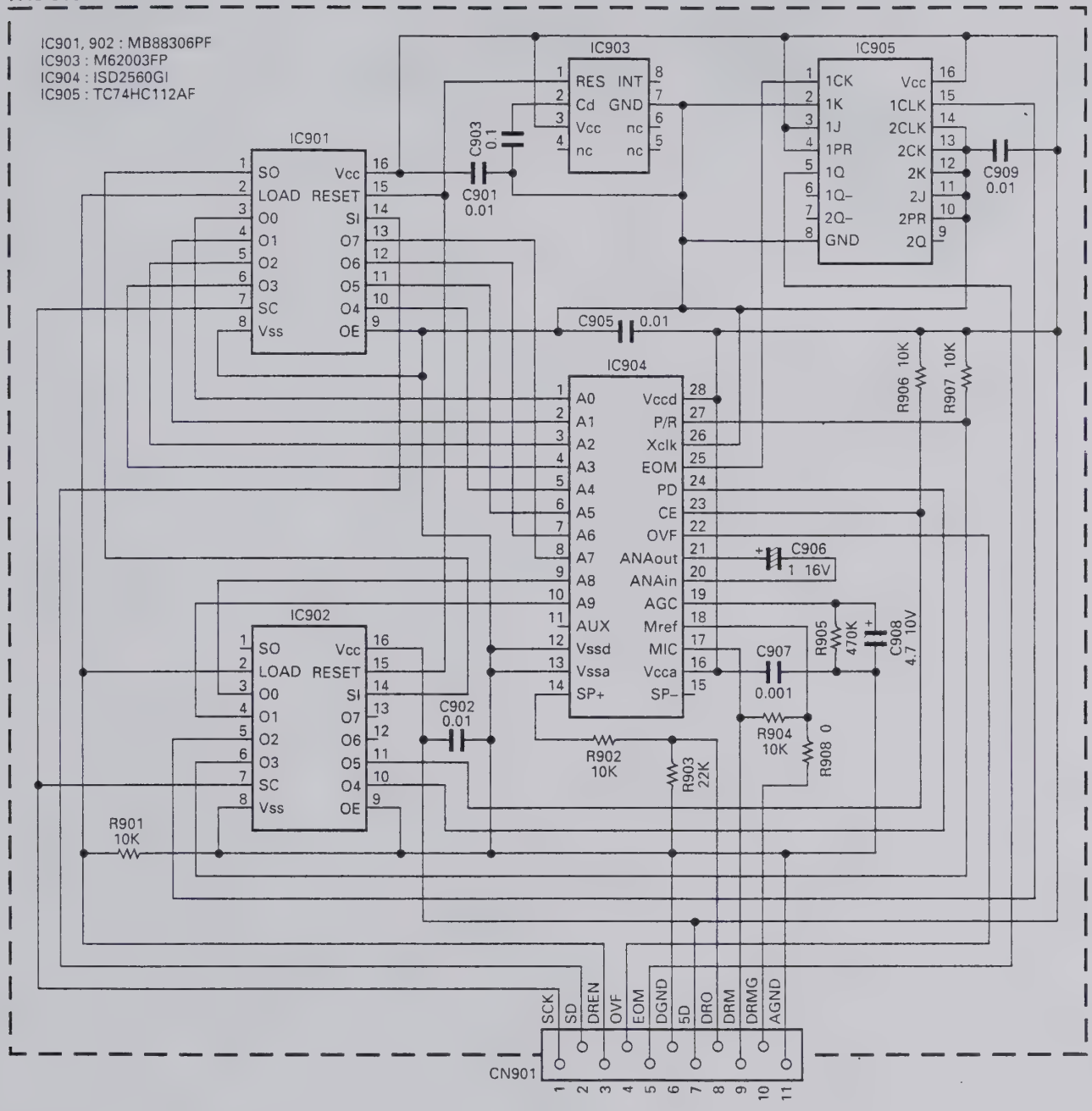

PG-2Z (DC CABLE)

PG-2Z External View

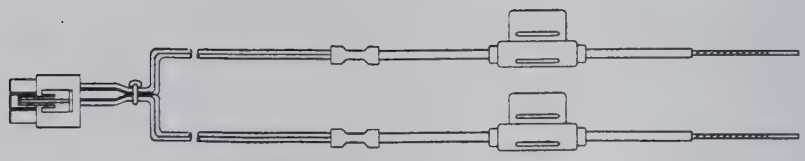

PG-2Z Parts List

Parts No.	New parts	Description
E30-3157-15		DC cable assy
F05-2531-05		Fuse (25A/32V)

SPECIFICATIONS

	Item			Rating
GENERAL	Mode			J3E (LSB, USB), A1A (CW), A3E (AM), F3E (FM), F1D (FSK)
	Number of memory channels			100
	Antenna impedance			50Ω (With Antenna Tuner 20 to 150Ω)
	Supply voltage			DC 13.8V ± 15%
	Grounding method			Negative ground
	Current	Transmit (Max.)		20.5A
		Receive (No signal)		2A
	Usable temperature range			–10°C to +50°C (+14°F to +122°F)
	Frequency stability (–10°C to +50°C)			Within ±10PPM
	Frequency accuracy (At room temperature)			Within ±10PPM
	Dimensions [W x H x D] (Projections included)			330 x 120 x 334 mm/13.0 x 4.72 x 13.1 in (339 x 135 x 375 mm/13.3 x 5.31 x 14.8 in)
	Weight			Approx. 11.5kg (25lbs)
TRANSMITTER	Frequency range	160m band		1.8*1 to 2.0*2MHz
		80m band		3.5 to 4.0*3MHz
		40m band		7.0 to 7.3*4MHz
		30m band		10.1 to 10.15MHz
		20m band		14.0 to 14.35MHz
		17m band		18.068 to 18.168MHz
		15m band		21.0 to 21.45MHz
		12m band		24.89 to 24.99MHz
		10m band		28.0 to 29.7MHz
	Output power*5	SSB, CW, FSK, FM	Max.	100W
			Min.	20W or less
		AM	Max.	25W
			Min.	20W or less
	Modulation	SSB		Balanced
		FM		Reactance
		AM		Low level
	Spurious emissions			–60dB or less
	Carrier suppression			50dB or more
	Unwanted sideband suppression (Modulation frequency 1.0kHz)			50dB or more
	Maximum frequency deviation (FM)	Wide		±5kHz or less
		Narrow		±2.5kHz or less
	Transmit frequency characteristics (–6dB) (TX lower cutoff : 300Hz, TX bandwidth : 2.3kHz)			300 to 2600Hz
	XIT shift frequency range			±9.99kHz
	Microphone imppedance			600Ω

*1 1.81MHz : Europe, France, Holland; 1.83MHz : Belgium, Spain

*2 1.85MHz : Belgium, France, Holland, Spain

*3 3.8MHz : Europe, Belgium, France, Holland, Spain

*4 7.1MHz : Europe, Belgium, France, Holland, Spain

*5 Belgium, Spain : 10W fixed on 160m band

TS-870S

SPECIFICATIONS

	Item			Rating
RECEIVER	Circuit type			Quadruple conversion superheterodyne
	Frequency range			100kHz to 30MHz
	Intermediate frequency			1st : 73.05MHz, 2nd : 8.83MHz, 3rd : 455kHz, 4th : 11.3kHz
	Sensitivity	SSB, CW, FSK (At 10dB (S+N)/N)	100kHz to 500kHz	1μV or less
			500kHz to 1.62MHz*6	4μV or less
			1.62MHz*6 to 24.5MHz	0.2μV or less
			24.5MHz to 30MHz	0.13μV or less
		AM (At 10dB (S+N)/N)	100kHz to 500kHz	2μV or less
			500kHz to 1.62MHz*6	31.6μV or less
			1.62MHz*6 to 24.5MHz	2μV or less
			24.5MHz to 30MHz	2μV or less
		FM (At 12dB SINAD)	28MHz to 30MHz	0.25μV or less
	Selectivity	SSB Lo : 300Hz, Hi : 2600Hz		–6dB : 2.3kHz, –60dB : 3.3kHz
		CW Width : 200Hz		–6dB : 200Hz, –60dB : 450Hz
		FSK Width : 500Hz		–6dB : 500Hz, –60dB : 1000Hz
		AM Lo : 100Hz, Hi : 4000Hz		–6dB : 9kHz, –60dB : 12kHz
		FM Width : 14kHz		–6dB : 14kHz, –60dB : 18kHz
	Image rejection (1.8MHz to 30MHz)			80dB or more
	1st IF rejection (1.8MHz to 30MHz)			80dB or more
	Notch filter atteneuation			40dB or more
	RIT shift frequency range			±9.99kHz
	Squelch sensitivity	SSB, CW, FSK, AM	100kHz to 500kHz	2μV or less
			500kHz to 1.62MHz*6	20μV or less
			1.62MHz*6 to 30MHz	2μV or less
		FM	28MHz to 30MHz	0.25μV or less
	Audio output (8Ω, 10% distortion)			1.5W or more
	Audio output impedance			8Ω

*6 1.705MHz : Canada, U.S.A.

Specifications are subject to change without notice or obligation due to ongoing technological developments.

KENWOOD CORPORATION
14-6, Dogenzaka 1-chome, Shibuya-ku, Tokyo 150, Japan

KENWOOD SERVICE CORPORATION
P.O. BOX 22745, 2201 East Dominguez Street, Long Beach, CA 90801-5745, U.S.A.

KENWOOD ELECTRONICS LATIN AMERICA S.A.
P.O. BOX 55-2791 Piso 6 Plaza Chase Cl. 47 y Aquilino de la Guardio Panama, Republic of Panama

KENWOOD ELECTRONICS CANADA INC.
6070 Kestrel Road, Mississauga, Ontario, Canada L5T 1S8

KENWOOD ELECTRONICS DEUTSCHLAND GMBH
Rembrücker Str. 15, 63150 Heusenstamm, Germany

KENWOOD ELECTRONICS BENELUX N.V.
Mechelsesteenweg 418 B-1930 Zaventem, Belgium

TRIO-KENWOOD FRANCE S.A.
13, Boulevard Ney, 75018 Paris, France

TRIO-KENWOOD U.K. LIMITED
KENWOOD House, Dwight Road, Watford, Herts., WD1 8EB United Kingdom

KENWOOD ELECTRONICS NEDERLAND B.V.
Amsterdamseweg 35, 1422 AC Uithoorn, The Netherlands

KENWOOD ELECTRONICS ITALIA S.p.A.
Via G. Sirtori, 7/9 20129 Milano, Italy

KENWOOD IBERICA S.A.
Bolivia, 239-08020 Barcelona, Spain

KENWOOD ELECTRONICS AUSTRALIA PTY. LTD.
(A.C.N. 001 499 074)
P.O. Box 504, 8 Figtree Drive, Australia Centre, Homebush, N.S.W. 2140, Australia

KENWOOD & LEE ELECTRONICS, LTD.
Unit 3712-3724, Level 37, Tower one Metroplaza, 223 Hing Fong Road, Kwai Fong, N.T., Hong Kong

HF TRANSCEIVER

TS-870S

SERVICE MANUAL

KENWOOD

© 1995-8 PRINTED IN JAPAN
B51-8296-00(N)1360

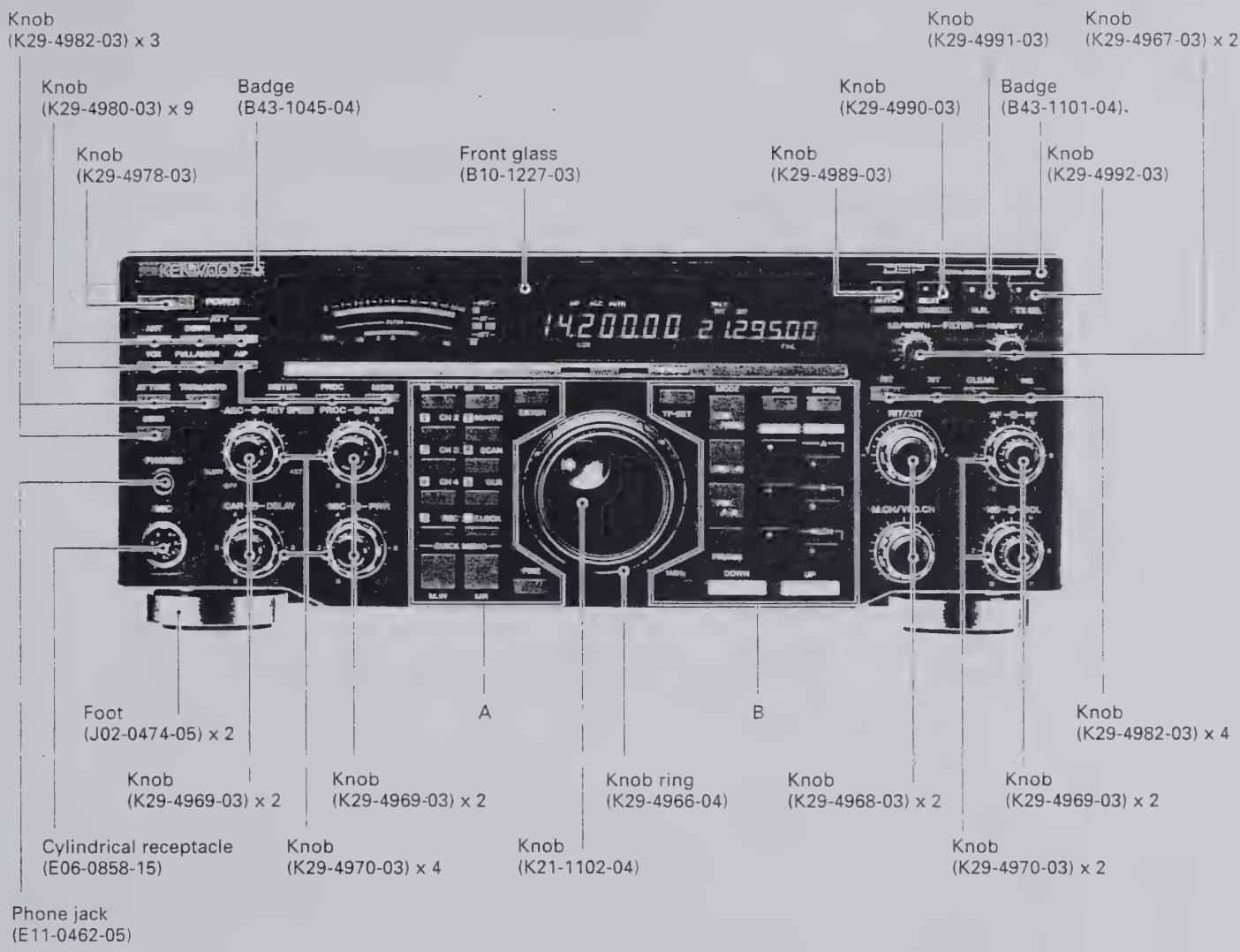

A

Knob (K29-4982-03)	Knob (K29-4982-03)	Knob (K29-4982-03)
Knob (K29-4982-03)	Knob (K29-4982-03)	
Knob (K29-4982-03)	Knob (K29-4982-03)	
Knob (K29-4982-03)	Knob (K29-4982-03)	
Knob (K29-4980-03)	Knob (K29-4980-03)	
Knob (K29-4984-03)	Knob (K29-4984-03)	Knob (K29-4982-03)

B

Knob (K29-4982-03)	Knob (K29-4985-03)	Knob (K29-4982-03)	Knob (K29-4982-03)
	Knob (K29-4986-03)	Knob (K29-4983-03)	Knob (K29-4981-03)
	Knob (29-4987-03)	Knob (K29-4983-03)	Knob (K29-4981-03)
	Knob (K29-4988-03)	Knob (K29-4983-03)	Knob (K29-4981-03)
Knob (K29-4982-03)	Knob (K29-4979-03)		Knob (K29-4979-03)

CONTENTS

CIRCUIT DESCRIPTION 3
DESCRIPTION OF COMPONENTS 45
SEMICONDUCTOR DATA 53
PARTS LIST 58
EXPLODED VIEW 81
PACKING 88
ADJUSTMENT 89
TERMINAL FUNCTION 104
CIRCUIT DIAGRAMS / PC BOARD VIEWS
- LCD ASSY (B38-0736-05) 110
- RF UNIT (X44-3210-00) (A/9) : RF 113
- RF UNIT (X44-3210-00) (B/9) : PLL 117
- RF UNIT (X44-3210-00) (C/9) 127
- VCO2 (X58-3390-03) 127
- FINAL UNIT (X45-351X-XX) (A/5) : FINAL 128
- FINAL UNIT (X45-351X-XX) (B/5) : FILTER 130
- FINAL UNIT (X45-351X-XX) (D/5) : AVR 132
- FINAL UNIT (X45-351X-XX) (E/5) : RELAY 132
- AT UNIT (X53-3340-02) (A/2) 137
- AT UNIT (X53-3340-02) (B/2) 139
- CONTROL UNIT (X53-356X-XX) (A/4) : CONTROL 143
- CONTROL UNIT (X53-356X-XX) (B/4) : SW 147
- TX-RX UNIT (X57-4620-00) 155
- RF UNIT (X44-3210-00) (D/9) 169
- RF UNIT (X44-3210-00) (E/9) 169
- RF UNIT (X44-3210-00) (F/9) 170
- RF UNIT (X44-3210-00) (G/9) 170
- RF UNIT (X44-3210-00) (H/9) 171
- RF UNIT (X44-3210-00) (I/9) 171
- FINAL UNIT (X45-351X-XX) (C/5) : CONNECTION 172
- CONTROL UNIT (X53-356X-XX) (D/4) : MIC 174

SCHEMATIC DIAGRAM 175
BLOCK DIAGRAM 179
LEVEL DIAGRAM 183
DRU-3 (DIGITAL RECORDING UNIT) 185
PG-2Z (DC CABLE) 188
SPECIFICATIONS 189

CIRCUIT DESCRIPTION

Frequency Configuration

The TS-870S is quadruple conversion in receive mode. As a transmitter, it is quadruple conversion in non-FM modes and double conversion in FM mode.

The fourth 11.3kHz IF signal is converted from analog to digital, connected to the DSP in receive mode, and decoded. In transmit mode, the microphone input signal is converted from analog to digital and applied to the DSP. It is converted from digital to analog, passed through a mixer, and becomes the 455kHz TIF signal In FM mode, however, only 455kHz carriers are output from the DSP.

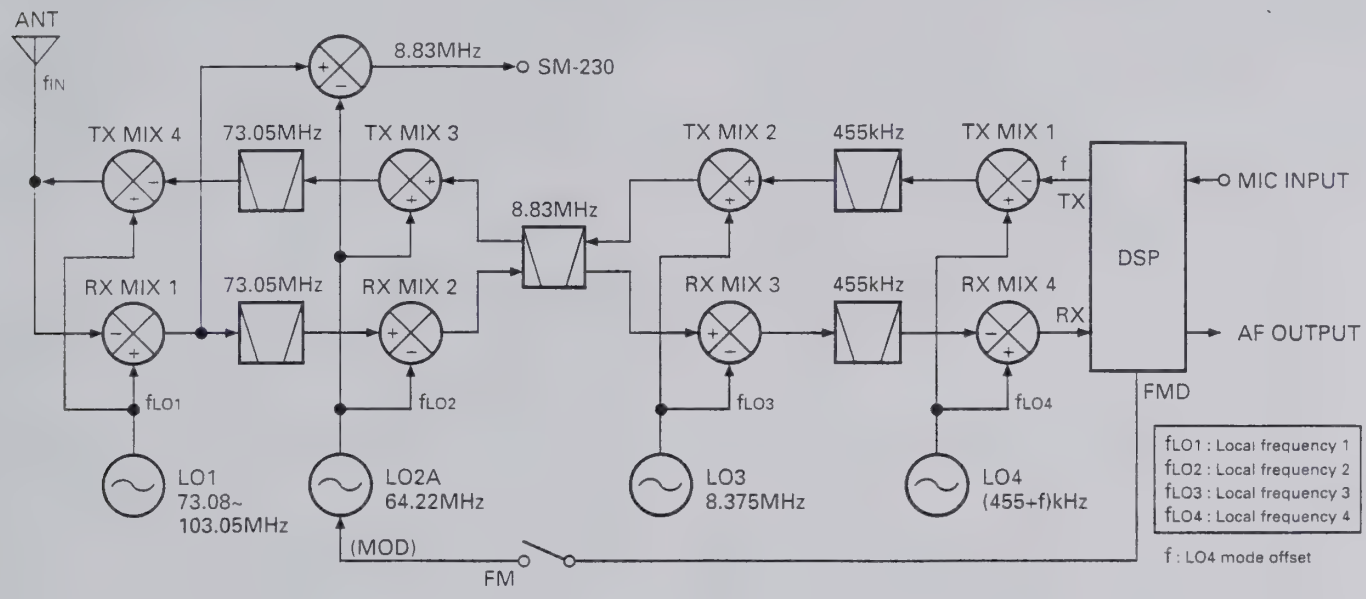

Fig. 1 Frequency configutation

■ Frequency configuration

When the receiver frequency by fIN from the antenna in SSB mode is zero beat (namely, at zero to the SSB signal with a carrier point of fIN), the relationship between these signals is expressed by the following equation.

$$f_{IN} = f_{LO1} - f_{LO2} - f_{LO3} - f_{LO4} + f \quad \ldots . (1)$$

Since all these frequencies are generated by the PLL or DDS circuits as shown in the PLL block diagram in Figure 2, the receiver frequency is determined only by the reference frequency fSTD, the PLL dividing ratio and DDS data. Therefore, the reference frequency accuracy equals the operating frequency accuracy.

The accuracy of the reference oscillator used in the TS-870S is 10ppm (–10 to +50°C). If the temperature-compensated crystal oscillator (TCXO) SO-2 is used, the accuracy becomes 0.5ppm (–10 to +50°C).

The TS-870S local oscillator and CAR DDS are independent of each other. However, they can be operated like a cancel loop configuration by changing the CAR and local oscillator PLL data simultaneously via a microprocessor. This function allows a shift (fLO1, fLO3, fLO4) by the mode change to be performed and the band width of the slope tune to be varied (fLO1, fLO3, fLO4).

When used as a transmitter in SSB mode or in other modes, likewise the frequency is determined by the reference frequency fSTD and dividing ratio. The display frequencies in the modes are listed in Table 1. In the FSK mode, the TS-870S displays the mark transmitter frequency.

In CW mode, the TS-870S receiving pitch can be changed to the required frequency in 50Hz steps with the desired signal remaining in the center of the IF filter band-pass (Variable CW pitch system). Since the receiving pitch varies along with the transmitter side tone, it is possible to zero-beat by receiving the desired signal at the same pitch as the side tone.

FM transmission is obtained in this system by modulating the f_{LO2} via application of the audio signal from the microphone to the VCO2.

Mode	Display frequency
USB, LSB	Carrier point frequency
CW	Transmission carrier frequency
FSK	Mark transmitter frequency
AM, FM	IF filter center frequency

Table 1 Display frequency in each mode

PLL Circuit

The TS-870S PLL circuit consists of a PLL loop that includes DDS covering a frequency range between 30kHz to 30MHz in 10Hz or 1Hz steps in accordance with the 20kHz reference frequency; DDS that generates other local oscillators (LO3, LO4); and a PLL loop that produces LO2A.

The dividing ratio data to each PLL loop and the DDS data are controlled by a microprocessor. Each loop is controlled by a single crystal frequency control system according to the reference frequency f_{STD}. (See the PLL block diagram in Figure 2.)

■ Reference signal generation circuit

The reference frequency f_{STD} used for frequency control is determined by the 20MHz crystal oscillator (X800 and Q800 : 2SC2714). One reference frequency is output as the reference signal f_{REF} for the PLL and DDS in the PLL section. The other is sent to the TX-RX unit and used as the PLL reference signal for the PLL and DSP.

The crystal oscillator may be replaced by an optional TCXO (SO-2), and the TCXO may be switched to with slide switch S800.

If the optional TCXO (SO-2) is installed, the S800 switch must be set to the SO-2 position.

■ LO2 (PLL section)

Q1 : 2SK508NV in VCO2 (A501 : X58-3390-03) generates 64.22MHz. The 20MHz reference frequency f_{REF} is applied to pin 15 of IC509 : MB86001PF, and is divided internally by a factor of 1000 (4000 in FM mode) to produce a 20kHz (5kHz in FM mode) comparison frequency.

The VCO2 output is applied to pin 6 of IC509 : MB86001PF, and is internally divided by a factor of 3211 (12844 in FM mode). It is compared with the 20kHz (5kHz in FM mode) signal using the phase comparator. The VCO2 frequency is locked. The division ratio is transmitted from the control unit.

The output from PLL2 is passed through buffer Q539, amplified by amplifier Q532, passed through a low-pass filter, its impedance is converted, and is then output to the RF section as LO2A.

■ LO1 (PLL loop)

Four VCOs and uses Q520 to Q523 : 2SK508NV x 4 to generate 73.08MHz to 103.05MHz. The 20MHz reference frequency f_{REF} is applied to pin 15 of PLL IC IC507 : MB86001PF, and is internally divided by a factor of 20 to produce a 1MHz comparison frequency. The output is passed through amplifier Q524, and a band-pass filter. One output is passed through buffer Q526 : 2SC2996 and a low-pass filter and goes to the RF section.

The other output signal is passed through buffer Q525 : 2SC2714 and applied to pin 5 of mixer IC508 : SN76514. A signal of 54.54 to 55.54MHz is input to pin 11 of IC508 and converted to a signal of 18.0 to 48.0MHz. This signal is output from pin 13. The signal is passed through a high-pass filter, a low-pass filter, and amplifier Q531 : 2SC2714 and Q530 : 2SC2712, and goes to pin 6 of PLL IC IC507 : MB86001PF.

This signal is internally divided by N, and compared with the 1MHz signal using the phase comparator. The mixer output frequency is locked in 1MHz steps. The division ratio N is transmitted from the control unit as data (N : 18 to 48) corresponding to 0MHz to 30MHz in 1MHz steps. One of the four VCOs is selected according to the VCO change signal (VB0 to VB3) sent from the control unit.

CIRCUIT DESCRIPTION

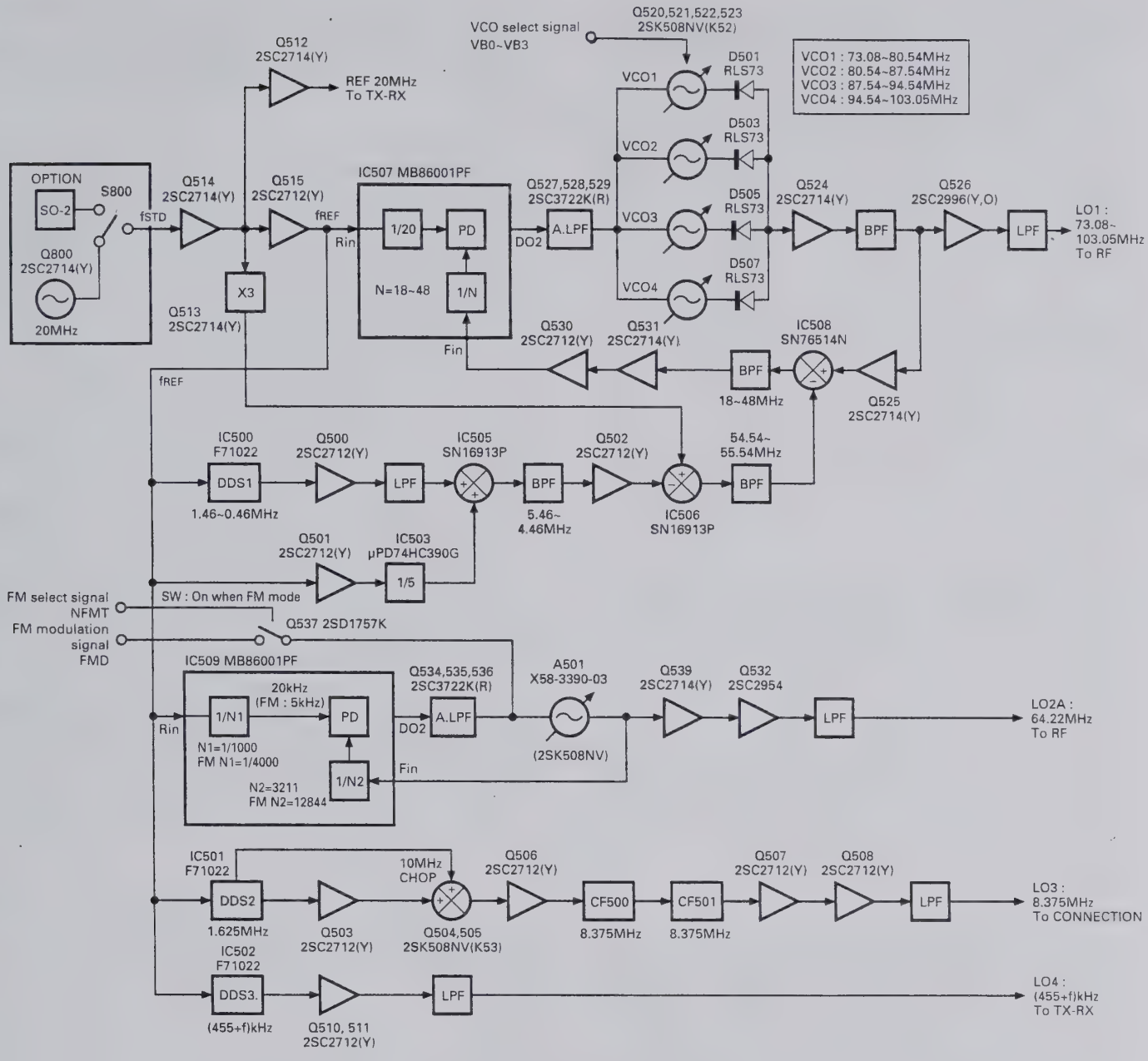

Fig. 2 PLL block diagram

CIRCUIT DESCRIPTION

DDS1 (IC500 : F71022) generates 1.46 to 0.46MHz digital signals. They are converted to analog signals by a digital to analog converter (consisting of CP500, CP501, and Q500), passed through a low-pass filter, and fed to pin 5 of mixer IC505 : SN16913P. The 4MHz signal produced by division of 20MHz reference frequency fREF by divider IC503 : UPD74HC390G by a factor of 5 is input to pin 2 of the mixer IC505, and a 5.46 to 4.46MHz signal is output from pin 1. The output signal is passed through a band-pass filter and buffer Q502, and input to pin 5 of mixer IC506 : SN16913P. The 60MHz signal obtained by tripling 20MHz reference frequency fREF via multiplying circuit Q515 is mixed, and a 54.54 to 55.54MHz signal is output. This signal is passed through a band-pass filter, and goes to pin 13 of mixer IC508.

DDS1 sweeps the 1.46 to 0.46MHz digital signal output in 10 or 1Hz steps, and LO1 covers the 73.08 to 103.05MHz signal in 10 or 1Hz steps and is output to the RF section.

■ LO3 generation

DDS2 (IC501 : F71022) generates a digital signal of the 1.625MHz basic frequency. It is converted to an analog signal by a digital-to-analog converter (consisting of CP502, CP503, and Q503), and chopped by a circuit consisting of Q503 to Q505 so as to extract an 8.375MHz primary harmonic component. Unwanted components are removed by a ceramic filter consisting of CF500 and CF501. The resulting signal is passed through amplifier Q507, buffer Q508, and a low-pass filter, and output to the connection section (final unit) as the LO3 signal.

■ LO4 generation

DDS3 (IC502 : F71022) generates a (455+f) kHz digital signal. It is converted to an analog signal by a digital to analog converter (consisting of CP504, CP505, and Q510), passed through buffer Q511 and a low-pass filter, and output to the TX-RX unit as the LO4 signal.

The LO4 signal is a local oscillator signal used to generate a DSP processing signal f from 455kHz. The f frequency is described in the local signal section (page 14).

■ Subtone generation

During FM transmission, the DSP generates a signal to which a subtone is added and is then sent to the main unit as it is.

■ PLL data

The TS-870S has three PLLs to which the main CPU sends PLL data based on the displayed frequency.

- PLL comprising a VFO (PLL section)
- Local oscillator PLL for frequency conversion (PLL section)
- PLL that generates timing clocks for digital signal processing (TX-RX unit)

The VCOs change with the following conditions.

- Main encoder change → VCO1 (PLL section)
- Mode change → VCO2 (PLL section)

Each PLL IC outputs an unlock signal. If any PLL is unlocked, the main display indicates ". . . . . " (dots). If the unlocked PLL is the TX-RX unit, the sub-display shows "Err-FD", and if it is the PLL unit, it shows "Err-FE" to indicate that it is unlocked.

The unlocking of each PLL is output to pin 11 (UL) of PLL IC : MB86001PF as unlock data (UNLOCK : LOW).

Loop	VCO No.	IC No.	Comparison frequency/divide ratio	Variable divide ratio	Frequency (MHz)
LO1	VCO1	IC507	1MHz/20	18~48	73.08~103.05
LO2	VCO2	IC509	20kHz/1000 5kHz/4000 : FM	3211 12844 : FM	64.22

CIRCUIT DESCRIPTION

■ DDS circuit configuration

The DDS IC has been developed with standard cells to implement a high-speed operation circuit and large-capacity ROM at a low cost.

1) IC configuration

The IC consists of the following components:

Two 28 bit registers for setting frequency data, one 28 bit frequency shift register for addition to the frequency register, a 23 bit parallel signal input section for frequency modulation with a parallel signal, and a data entry and selection section.

Frequency modulation section comprised of a 28 bit adder that adds frequency data and frequency modulation data

Phase data operation section that adds data from the frequency modulation section with the 28 bit phase data register

SIN-ROM that converts phase data to sine data.

2) Frequency/shift data setting

Using serial signals synchronized with clock pulses, a total of 30 bits (2 bits that specify the destination to which data are set and 28 bits for frequency data) are set in three internal registers.

3) Frequency register selection

The data set in the two frequency registers are selected by the SLAB input of the DDS IC. This pin handles the TXC signal. This function eliminates the need for the TS-870S microprocessor to set frequency data for each transmission and reception.

4) Frequency data selection

The SPSL input of the DDS IC selects whether to use the data in the internal frequency shift register or the data from parallel input as frequency modulation data.

5) Frequency modulation

The MDEN input of the DDS IC enables or disables frequency modulation. When frequency modulation is enabled, frequency data is added, and the result is input to the phase data operation section.

6) Phase data operation

The target frequency phase data is output by accumulating 28 bit frequency data in the 28 bit phase accumulator.

$Fout = Fs/2^{28} \cdot Dsum$

Fs : DDS IC input frequency/2

Dsum : Frequency data+Frequency modulation data

If 2^{25} is set for Dsum when 1/8 Fs is output, the phase data must be increased by $\pi/8$.

A 28 bit absolute value operation has been used here, but a 28 bit signed operation can also be used, assuming that the MSB is a sign. If complement data of 8000000 to FFFFFFFF (hex) is set, the phase moves in the negative direction for the positive data.

7) SIN-ROM

Phase data from the phase data operation section is converted to sine data of 0000 to FFFF (hex) in the 16 bit offset binary format.

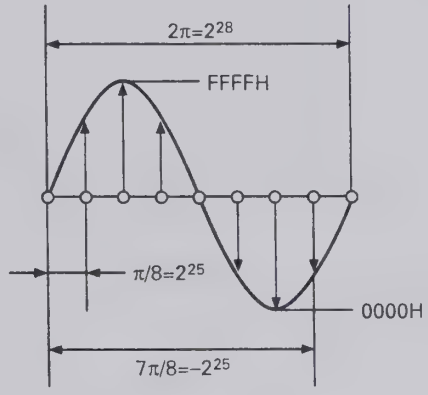

CIRCUIT DESCRIPTION

Receiver Circuit

The basic configuration of the receiver circuit is quadruple conversion. After the frequency is converted to the 11.3kHz fourth IF, the DSP carries out AGC, filtering, detection, and signal processing. Figure 3 is a receiver block diagram.

The signal coming from the antenna connector is passed through the antenna switching relay (K301) in the final unit (E/5 relay section), the antenna tuner unit, and the transmit/receive changeover relay (K302) within the relay section, and then goes to the CN2 (RAT) of the RF unit (A/9 RF section).

The signal input to the RF unit is passed through protection lamp PL1 for strong signal input, external receiver power distribution circuit L1 and L2 and switching circuit K1, and is input to the ATT (–6dB, –12dB) circuit. This distribution circuit is switched when the EXT RX (function that distributes the signals from the antenna to the external receiver), which is set from menu No.53, is turned ON. When this function is ON, the signal from the antenna is attenuated by about 4dB and output to the receiver section in the subsequent stage and the EXT RX terminal on the rear. The signal to the EXT RX terminal is passed through lamp PL2 for protection during transmission. The lamp turns OFF when about 10W is input.

The signal is passed through the ATT switching circuit, then goes to the BC band attenuation circuit (L7 to L9, C19 to C22). The BC band signal is attenuated by 5 to 10dB to prevent power saturation of the band-pass filter switching diode resulting from interference from a proximate station. The band-pass filter consists of two low-pass filters and 10 band-pass filters, and passes signals during transmission. The pin diode (1SV128) is used to change the input to raise the signal saturation level when a HIGH signal is input.

The RF amplifier circuit functions as a low-gain amplifier using Q14 and Q15 : 2SK2218(5) x 2 when the frequency is 21.49MHz or lower, and it functions as a high-gain amplifier using Q13 : 3SK131(M) when the frequency is higher than 21.49MHz. It is bypassed when AIP is ON.

The 73.05MHz first IF signal is generated by quad mixer Q17 to Q20 : 2SK520(K44) x 4. It is passed through XF1 73.05MHz MCF, Q24 : 3SK131(M) first mixer amplifier, and Q26 and Q27 : 2SK520(K43) mixer to produce a 8.83MHz second IF signal. The second IF signal is divided into two signals, one of which is branched to the noise blanker, amplified by amplifier Q28, and then goes to the NB circuit. The other signal is input to the second IF signal amplifier, and serves as a blanking gate by the NB and RBK signals. The amplified second IF signal is passed through the 8.83MHz IF filter, and output to the final unit (C/5 connection section) from CN10. This signal is switched with the diode switch D62 and D68, and functions as a second IF signal output during reception and a third IF signal input during transmission.

The second IF signal input to CN412 in the final unit (C/5 connection section) is routed to the receiver circuit by D450, and input to the mixer Q460 and Q461 to generate a 455kHz third IF signal. It is passed through the 455kHz IF filter, amplified by third IF amplifier Q475, and output by CN411 to the TX-RX unit as RIF signal. The total gain of the receiver unit is adjusted by VR1 in the TX-RX unit.

CIRCUIT DESCRIPTION

■ IF filter

The IF filter consists of a DSP digital filter. If there is a HIGH signal outside the DSP filter band, the analog to digital converter input level may be saturated, and the filter does not work properly. Thus, an analog filter is inserted between the second IF (8.83MHz) and the third IF (455kHz) so that it does not impair the DSP filter properties. To operate each filter properly, there are three kinds of filters for each IF signal and also slope tuning is carried out.

1) Filters characteristics

Item	Rating
Nominal center frequency	73.05MHz
Pass bandwidth	±7.5kHz or more at 3dB
Attenuation bandwidth	±30kHz or less at 40dB
Ripple	1.0dB or less
Insertion loss	3.0dB or less
Guaranteed attenuation	70dB or more at fo + (500 to 1000kHz) 70dB or more at fo – (200 to 1000kHz)
Center frequency deviation	Within ±1.5kHz at 3dB
Terminating impedance	2kΩ ± 10%

MCF (L71-0401-05) : RF unit XF1

Item	Rating
Nominal center frequency	8830kHz
Center frequency deviation	Within ±150Hz at 6dB
Pass bandwidth	±1.5kHz or more at 6dB
Attenuation bandwidth	±1.9kHz or less at 20dB ±2.75kHz or less at 60dB ±3.5kHz or less at 80dB
Ripple	2dB or less
Insertion loss	6dB or less
Guaranteed attenuation	80dB or more in the range ±3.5kHz to ±1MHz
Terminating impedance	600Ω / 15pF

MCF (L71-0235-05) : RF unit XF2

Item	Rating
Nominal center frequency	8830kHz
Pass bandwidth	±3.0kHz or more at 6dB
Attenuation bandwidth	±16.0kHz or less at 60dB ±13.0kHz or less at 50dB
Guaranteed attenuation	70dB or more with in fo ± 1MHz (Without spurious in the range fo to fo+500kHz)
Ripple	Within 1.0dB
Insertion loss	Within 1.5dB
Terminating impedance	1850kΩ / 2pF

MCF (L71-0266-05) : RF unit XF3

Item	Rating
Nominal center frequency	8.400MHz
3dB attenuation bandwidth	Within 180 ± 40kHz
20dB attenuation bandwidth	400kHz or less
Insertion loss	9.0dB or less Formula : 20 x log [E1÷ (2 x E2)]
Ripple	1.0dB or less (within 3dB band)
Spurious attenuation	25dB or more (6.0 to 10.0MHz)
Voltage capacity	50V DC (1 minute)
Insulating resistance	100MΩ or more (100V DC)
Input and output impedance	330Ω

Ceramic filter (L72-0343-05) : RF unit CF500, 501

Item	Rating
Nominal center frequency	455kHz
6dB bandwidth	±3kHz (455kHz)
50dB bandwidth	±9kHz (455kHz)
Ripple	2dB or less (within 455+2kHz)
Insertion loss	6dB or less
Guaranteed attenuation	60dB or more (within 455±100kHz)
Input and output impedance	2.0kΩ

Ceramic filter (L72-0319-05) : Final unit CF451

Item	Rating
Center frequency	455±0 20kHz
6dB bandwidth	2.9 to 3.2kHz
60dB bandwidth	4.7kHz or less
Guaranteed attenuation	60dB or more at 0.1 to 1MHz
Spurious	40dB or more at 600 to 700kHz
6dB band ripple	2dB or less
Insertion loss	6dB or less
Input and output impedance	2kΩ

Ceramic filter (L72-0333-05) : Final unit CF452

Item	Rating
Nominal center frequency	455kHz
6dB bandwidth	±7.5kHz or more (455kHz)
50dB bandwidth	±15kHz or less (455kHz)
Ripple	3dB or less (within 455+5kHz)
Insertion loss	6dB or less
Guaranteed attenuation	35dB or more (within 455±100kHz)
Input and output impedance	1.5kΩ

Ceramic filter (L72-0366-05) : Final unit CF453

CIRCUIT DESCRIPTION

Receiver Circuit

The basic configuration of the receiver circuit is quadruple conversion. After the frequency is converted to the 11.3kHz fourth IF, the DSP carries out AGC, filtering, detection, and signal processing. Figure 3 is a receiver block diagram.

The signal coming from the antenna connector is passed through the antenna switching relay (K301) in the final unit (E/5 relay section), the antenna tuner unit, and the transmit/receive changeover relay (K302) within the relay section, and then goes to the CN2 (RAT) of the RF unit (A/9 RF section).

The signal input to the RF unit is passed through protection lamp PL1 for strong signal input, external receiver power distribution circuit L1 and L2 and switching circuit K1, and is input to the ATT (–6dB, –12dB) circuit. This distribution circuit is switched when the EXT RX (function that distributes the signals from the antenna to the external receiver), which is set from menu No.53, is turned ON. When this function is ON, the signal from the antenna is attenuated by about 4dB and output to the receiver section in the subsequent stage and the EXT RX terminal on the rear. The signal to the EXT RX terminal is passed through lamp PL2 for protection during transmission. The lamp turns OFF when about 10W is input.

The signal is passed through the ATT switching circuit, then goes to the BC band attenuation circuit (L7 to L9, C19 to C22). The BC band signal is attenuated by 5 to 10dB to prevent power saturation of the band-pass filter switching diode resulting from interference from a proximate station. The band-pass filter consists of two low-pass filters and 10 band-pass filters, and passes signals during transmission. The pin diode (1SV128) is used to change the input to raise the signal saturation level when a HIGH signal is input.

The RF amplifier circuit functions as a low-gain amplifier using Q14 and Q15 : 2SK2218(5) x 2 when the frequency is 21.49MHz or lower, and it functions as a high-gain amplifier using Q13 : 3SK131(M) when the frequency is higher than 21.49MHz. It is bypassed when AIP is ON.

The 73.05MHz first IF signal is generated by quad mixer Q17 to Q20 : 2SK520(K44) x 4. It is passed through XF1 73.05MHz MCF, Q24 : 3SK131(M) first mixer amplifier, and Q26 and Q27 : 2SK520(K43) mixer to produce a 8.83MHz second IF signal. The second IF signal is divided into two signals, one of which is branched to the noise blanker, amplified by amplifier Q28, and then goes to the NB circuit. The other signal is input to the second IF signal amplifier, and serves as a blanking gate by the NB and RBK signals. The amplified second IF signal is passed through the 8.83MHz IF filter, and output to the final unit (C/5 connection section) from CN10. This signal is switched with the diode switch D62 and D68, and functions as a second IF signal output during reception and a third IF signal input during transmission.

The second IF signal input to CN412 in the final unit (C/5 connection section) is routed to the receiver circuit by D450, and input to the mixer Q460 and Q461 to generate a 455kHz third IF signal. It is passed through the 455kHz IF filter, amplified by third IF amplifier Q475, and output by CN411 to the TX-RX unit as RIF signal. The total gain of the receiver unit is adjusted by VR1 in the TX-RX unit.

CIRCUIT DESCRIPTION

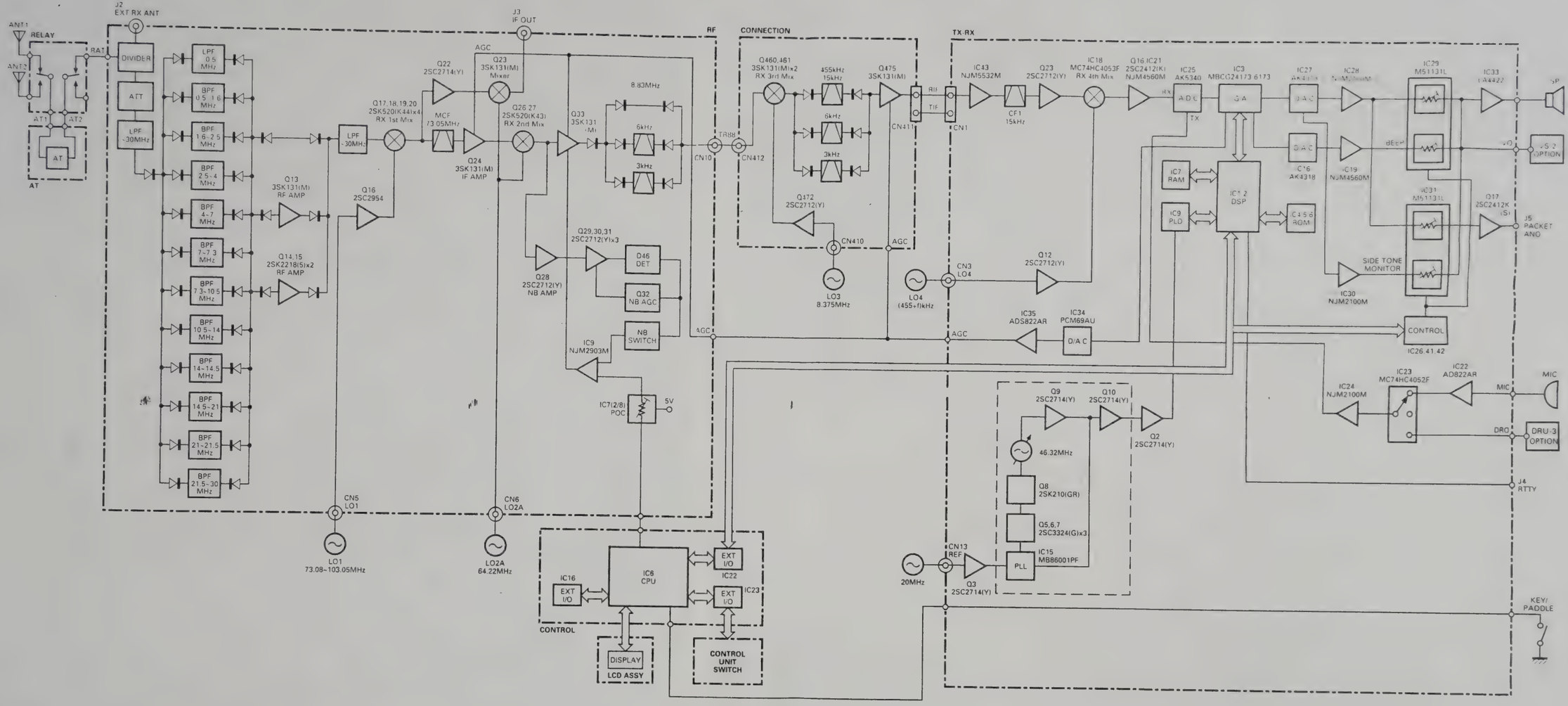

Fig. 3 Receiver block diagram

CIRCUIT DESCRIPTION

■ IF gain correction

The total gain changes when the AIP is turned ON or OFF or the band is 21.49MHz or higher. To limit the changes, the DSP corrects the IF gain. Table 2 lists the corrections. When the "AIP S-meter correction" on menu No.11 is turned ON, the S-meter is corrected when the AIP is turned ON. And since the IF gain is corrected greatly, the receiver internal noise output becomes large.

Frequency	Correction (dB)			Pre-amp gain (dB) reference
	AIP			
	OFF	ON1 (Menu 11 OFF)	ON2 (Menu 11 ON) SSB, CW, FSK only	
30kHz~ 21.49MHz	–2	0	+12	15
21.49MHz~ 30.MHz	–7	0	+12	21

Table 2 IF gain corrections

■ NB circuit

The noise blanker, like the conventional one, branches the signal before the narrow-band filter of the 8.83MHz second IF, and detects noise, and performs blanking using the second IF amplifier as a gate. The signal is amplified by Q28, detected by the AGC amplification and noise detection circuit consisting of Q29 to Q32 and D46, and then a blanking pulse is generated by the IC9 comparator. The noise detection circuit Q29 to Q32 and D46 is separated into segments by a jumper in the unit to prevent sneak path.

■ Slope tune

The operating principle of SSB-SLOPE-TUNE is explained first. When f_{LO1}, f_{LO3}, and f_{LO4} in Figure 4 are at their normal frequencies, the synthesized bandwidth is indicated by A. If the f_{LO1} frequency is increased by $\Delta f1$ and the f_{LO3} frequency is decreased by $\Delta f1$, the filter of the 8.83MHz band shifts to position B. The synthesized bandwidth is indicated by the section overlapped by A and B. When the frequencies of f_{LO1} and f_{LO3} are lowered by $\Delta f2$, only the 455kHz second IF filter shifts to position C. The synthesized bandwidth is indicated by the section overlapped by B and C.

Therefore, high frequencies are cut off by increasing the f_{LO1} frequency and decreasing the f_{LO3} frequency. Low frequencies are cut off by decreasing the f_{LO3} and f_{LO4} frequencies. The TS-870S enables these operations using the DSP filter.

In SSB mode, slope tune high cut/low cut is switched by using the filter select control : in CW mode, the WIDTH (bandwidth)/SHIFT (center frequency) is changed, and in FSK mode, the WIDTH (bandwidth) is changed. The microcomputer in the control unit sends filter select data to the DSP, and slope tuning is carried out by changing frequency data given to the PLL and DDS. The second IF (8.83MHz) and third IF (455kHz) filters are selected to carry out slope tuning effectively. Tables 3 and 4 list filter selections, slope tuning and analog filter high cut/low cut amounts. Slope tuning low cut/high cut can be switched in AM mode, and the WIDTH can be switched in FM mode by using DSP filters only, and the analog filter is fixed to 15kHz.

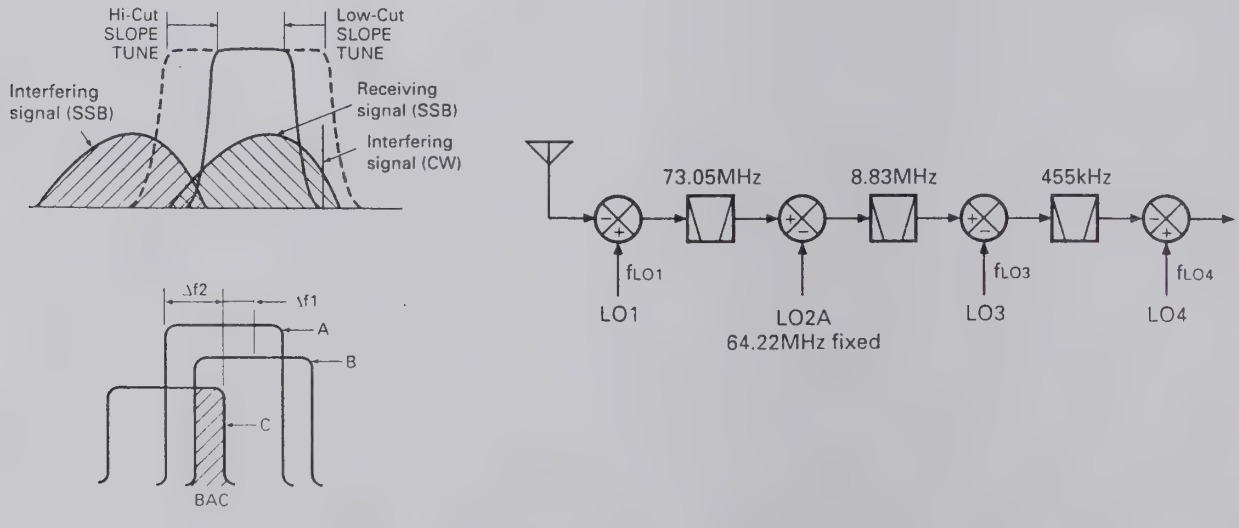

Fig. 4 SSB slope tune operating principle

CIRCUIT DESCRIPTION

	1.4k	1.6k	1.8k	2.0k	2.2k	2.4k	2.6k	2.8k	3.0k	3.4k	4.6k	6.0k
0 (Hz)	1.0k	0.8k	0.6k	0.4k	0.2k	0.0k	1.4k	1.2k	1.0k	0.6k	0.0k	0.0k
50	↑	↑	↑	↑	↑	↑	↑	↑	↑	↑	↑	↑
100	↑	↑	↑	↑	↑	↑	↑	↑	↑	↑	↑	↑
200	↑	↑	↑	↑	↑	↑	–0.2k	↑	↑	↑	↑	↑
300	↑	↑	↑	↑	↑	↑	↑	↑	↑	↑	↑	↑
400	↑	↑	↑	↑	↑	↑	↑	–0.4k	↑	↑	↑	↑
500	↑	↑	↑	↑	↑	↑	↑	↑	↑	↑	↑	↑
600	↑	↑	↑	↑	↑	↑	↑	↑	–0.6k	↑	↑	↑
800	↑	↑	↑	↑	↑	↑	↑	↑	↑	↑	–0.6k	↑
1000	↑	↑	↑	↑	↑	↑	↑	↑	↑	–1.0k	↑	↑

← High cut position

Filter selection
- 3kHz filter
- 6kHz filter
- 15kHz filter
- Default

↑
Low cut posotion
(455kHz filter) Low cut amount

(8.83MHz filter) High cut amount

Table 3 SSB slop tuning and analog filter high/low cut (Hz)

	400	450	500	550	600	650	700	750	800	850	900	950	1000
50 (Hz)	375	425	475	525	575	625	675	725	775	825	875	925	975
100	350	400	450	500	550	600	650	700	750	800	850	900	950
200	300	350	400	450	500	550	600	650	700	750	800	850	900
400	200	250	300	350	400	450	500	550	600	650	700	750	800
600	100	150	200	250	300	350	400	450	500	550	600	650	700
1000	–100	–50	0	50	100	150	200	250	300	350	400	450	500

← Filter center position

Default

↑
Filter width

Table 4-1 CW WIDTH/SHIFT low cut amount (Hz)

	400	450	500	550	600	650	700	750	800	850	900	950	1000
50 (Hz)	1975	1925	1875	1825	1775	1725	1675	1625	1575	1525	1475	1425	1375
100	1950	1900	1850	1800	1750	1700	1650	1600	1550	1500	1450	1400	1350
200	1900	1850	1800	1750	1700	1650	1600	1550	1500	1450	1400	1350	1300
400	1800	1750	1700	1650	1600	1550	1500	1450	1400	1350	1300	1250	1200
600	1700	1650	1600	1550	1500	1450	1400	1350	1300	1250	1200	1150	1100
1000	1500	1450	1400	1350	1300	1250	1200	1150	1100	1050	1000	950	900

← Filter center position

Default

↑
Filter width

Table 4-2 CW WIDTH/SHIFT high cut amount (Hz)

■ IF filter

The IF filter consists of a DSP digital filter. If there is a HIGH signal outside the DSP filter band, the analog to digital converter input level may be saturated, and the filter does not work properly. Thus, an analog filter is inserted between the second IF (8.83MHz) and the third IF (455kHz) so that it does not impair the DSP filter properties. To operate each filter properly, there are three kinds of filters for each IF signal and also slope tuning is carried out.

1) Filters characteristics

Item	Rating
Nominal center frequency	73.05MHz
Pass bandwidth	±7.5kHz or more at 3dB
Attenuation bandwidth	±30kHz or less at 40dB
Ripple	1.0dB or less
Insertion loss	3.0dB or less
Guaranteed attenuation	70dB or more at fo + (500 to 1000kHz) 70dB or more at fo – (200 to 1000kHz)
Center frequency deviation	Within ±1.5kHz at 3dB
Terminating impedance	2kΩ ± 10%

MCF (L71-0401-05) : RF unit XF1

Item	Rating
Nominal center frequency	8830kHz
Center frequency deviation	Within ±150Hz at 6dB
Pass bandwidth	±1.5kHz or more at 6dB
Attenuation bandwidth	±1.9kHz or less at 20dB ±2.75kHz or less at 60dB ±3.5kHz or less at 80dB
Ripple	2dB or less
Insertion loss	6dB or less
Guaranteed attenuation	80dB or more in the range ±3.5kHz to ±1MHz
Terminating impedance	600Ω / 15pF

MCF (L71-0235-05) : RF unit XF2

Item	Rating
Nominal center frequency	8830kHz
Pass bandwidth	±3.0kHz or more at 6dB
Attenuation bandwidth	±16.0kHz or less at 60dB ±13.0kHz or less at 50dB
Guaranteed attenuation	70dB or more with in fo ± 1MHz (Without spurious in the range fo to fo+500kHz)
Ripple	Within 1.0dB
Insertion loss	Within 1.5dB
Terminating impedance	1850kΩ / 2pF

MCF (L71-0266-05) : RF unit XF3

Item	Rating
Nominal center frequency	8.400MHz
3dB attenuation bandwidth	Within 180 ± 40kHz
20dB attenuation bandwidth	400kHz or less
Insertion loss	9.0dB or less Formula : 20 x log [E1÷ (2 x E2)]
Ripple	1.0dB or less (within 3dB band)
Spurious attenuation	25dB or more (6.0 to 10.0MHz)
Voltage capacity	50V DC (1 minute)
Insulating resistance	100MΩ or more (100V DC)
Input and output impedance	330Ω

Ceramic filter (L72-0343-05) : RF unit CF500, 501

Item	Rating
Nominal center frequency	455kHz
6dB bandwidth	±3kHz (455kHz)
50dB bandwidth	±9kHz (455kHz)
Ripple	2dB or less (within 455+2kHz)
Insertion loss	6dB or less
Guaranteed attenuation	60dB or more (within 455±100kHz)
Input and output impedance	2.0kΩ

Ceramic filter (L72-0319-05) : Final unit CF451

Item	Rating
Center frequency	455±0.20kHz
6dB bandwidth	2.9 to 3.2kHz
60dB bandwidth	4.7kHz or less
Guaranteed attenuation	60dB or more at 0.1 to 1MHz
Spurious	40dB or more at 600 to 700kHz
6dB band ripple	2dB or less
Insertion loss	6dB or less
Input and output impedance	2kΩ

Ceramic filter (L72-0333-05) : Final unit CF452

Item	Rating
Nominal center frequency	455kHz
6dB bandwidth	±7.5kHz or more (455kHz)
50dB bandwidth	±15kHz or less (455kHz)
Ripple	3dB or less (within 455+5kHz)
Insertion loss	6dB or less
Guaranteed attenuation	35dB or more (within 455±100kHz)
Input and output impedance	1.5kΩ

Ceramic filter (L72-0366-05) : Final unit CF453

■ IF gain correction

The total gain changes when the AIP is turned ON or OFF or the band is 21.49MHz or higher. To limit the changes, the DSP corrects the IF gain. Table 2 lists the corrections. When the "AIP S-meter correction" on menu No.11 is turned ON, the S-meter is corrected when the AIP is turned ON. And since the IF gain is corrected greatly, the receiver internal noise output becomes large.

Frequency	Correction (dB)			Pre-amp gain (dB) reference
	AIP			
	OFF	ON1 (Menu 11 OFF)	ON2 (Menu 11 ON) SSB, CW, FSK only	
30kHz~ 21.49MHz	–2	0	+12	15
21.49MHz~ 30.MHz	–7	0	+12	21

Table 2 IF gain corrections

■ NB circuit

The noise blanker, like the conventional one, branches the signal before the narrow-band filter of the 8.83MHz second IF, and detects noise, and performs blanking using the second IF amplifier as a gate. The signal is amplified by Q28, detected by the AGC amplification and noise detection circuit consisting of Q29 to Q32 and D46, and then a blanking pulse is generated by the IC9 comparator. The noise detection circuit Q29 to Q32 and D46 is separated into segments by a jumper in the unit to prevent sneak path.

■ Slope tune

The operating principle of SSB-SLOPE-TUNE is explained first. When f_{LO1}, f_{LO3}, and f_{LO4} in Figure 4 are at their normal frequencies, the synthesized bandwidth is indicated by A. If the f_{LO1} frequency is increased by $\Delta f1$ and the f_{LO3} frequency is decreased by $\Delta f1$, the filter of the 8.83MHz band shifts to position B. The synthesized bandwidth is indicated by the section overlapped by A and B. When the frequencies of f_{LO1} and f_{LO3} are lowered by $\Delta f2$, only the 455kHz second IF filter shifts to position C. The synthesized bandwidth is indicated by the section overlapped by B and C.

Therefore, high frequencies are cut off by increasing the f_{LO1} frequency and decreasing the f_{LO3} frequency. Low frequencies are cut off by decreasing the f_{LO3} and f_{LO4} frequencies. The TS-870S enables these operations using the DSP filter.

In SSB mode, slope tune high cut/low cut is switched by using the filter select control : in CW mode, the WIDTH (bandwidth)/SHIFT (center frequency) is changed, and in FSK mode, the WIDTH (bandwidth) is changed. The microcomputer in the control unit sends filter select data to the DSP, and slope tuning is carried out by changing frequency data given to the PLL and DDS. The second IF (8.83MHz) and third IF (455kHz) filters are selected to carry out slope tuning effectively. Tables 3 and 4 list filter selections, slope tuning and analog filter high cut/low cut amounts. Slope tuning low cut/high cut can be switched in AM mode, and the WIDTH can be switched in FM mode by using DSP filters only, and the analog filter is fixed to 15kHz.

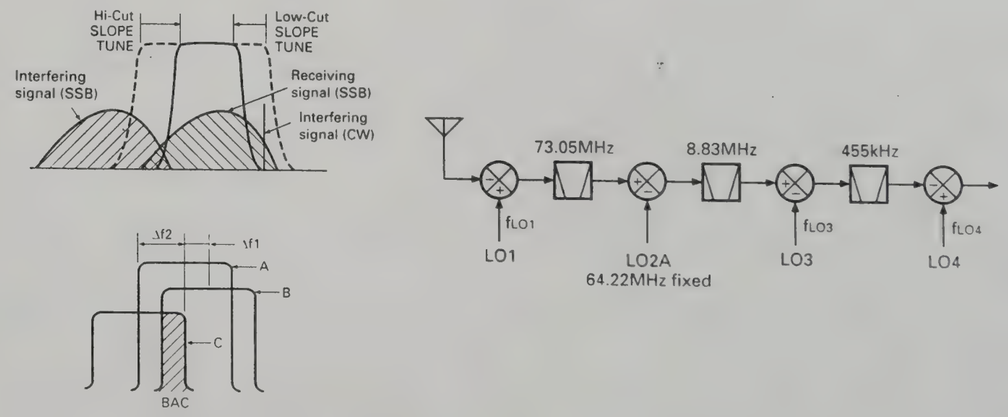

Fig. 4 SSB slope tune operating principle

CIRCUIT DESCRIPTION

	1.4k	1.6k	1.8k	2.0k	2.2k	2.4k	2.6k	2.8k	3.0k	3.4k	4.6k	6.0k
0 (Hz)	1.0k	0.8k	0.6k	0.4k	0.2k	0.0k	1.4k	1.2k	1.0k	0.6k	0.0k	0.0k
50	↑	↑	↑	↑	↑	↑	↑	↑	↑	↑	↑	↑
100	↑	↑	↑	↑	↑	↑	↑	↑	↑	↑	↑	↑
200	↑	↑	↑	↑	↑	↑	–0.2k	↑	↑	↑	↑	↑
300	↑	↑	↑	↑	↑	↑	↑	↑	↑	↑	↑	↑
400	↑	↑	↑	↑	↑	↑	↑	–0.4k	↑	↑	↑	↑
500	↑	↑	↑	↑	↑	↑	↑	↑	↑	↑	↑	↑
600	↑	↑	↑	↑	↑	↑	↑	↑	–0.6k	↑	↑	↑
800	↑	↑	↑	↑	↑	↑	↑	↑	↑	↑	–0.6k	↑
1000	↑	↑	↑	↑	↑	↑	↑	↑	↑	–1.0k	↑	↑

← High cut position

Filter selection
- 3kHz filter
- 6kHz filter
- 15kHz filter
- Default

↑
Low cut posotion
(455kHz filter) Low cut amount

(8.83MHz filter) High cut amount

Table 3 SSB slop tuning and analog filter high/low cut (Hz)

	400	450	500	550	600	650	700	750	800	850	900	950	1000
50 (Hz)	375	425	475	525	575	625	675	725	775	825	875	925	975
100	350	400	450	500	550	600	650	700	750	800	850	900	950
200	300	350	400	450	500	550	600	650	700	750	800	850	900
400	200	250	300	350	400	450	500	550	600	650	700	750	800
600	100	150	200	250	300	350	400	450	500	550	600	650	700
1000	–100	–50	0	50	100	150	200	250	300	350	400	450	500

← Filter center position

Default

↑
Filter width

Table 4-1 CW WIDTH/SHIFT low cut amount (Hz)

	400	450	500	550	600	650	700	750	800	850	900	950	1000
50 (Hz)	1975	1925	1875	1825	1775	1725	1675	1625	1575	1525	1475	1425	1375
100	1950	1900	1850	1800	1750	1700	1650	1600	1550	1500	1450	1400	1350
200	1900	1850	1800	1750	1700	1650	1600	1550	1500	1450	1400	1350	1300
400	1800	1750	1700	1650	1600	1550	1500	1450	1400	1350	1300	1250	1200
600	1700	1650	1600	1550	1500	1450	1400	1350	1300	1250	1200	1150	1100
1000	1500	1450	1400	1350	1300	1250	1200	1150	1100	1050	1000	950	900

← Filter center position

Default

↑
Filter width

Table 4-2 CW WIDTH/SHIFT high cut amount (Hz)

CIRCUIT DESCRIPTION

■ Local signals (LO1, LO3, LO4)

1) LO1

Table 5 lists LO1 frequency configuration.

DDS1 varies from 0.46 to 1.46MHz, and when the display frequency is multiple MHz (for example, 14.000MHz), 0.96MHz is output. When the display frequency is increased, the DDS1 frequency is reduced by the amount of change. When the DDS1 frequency is reduced to 0.46MHz, the frequency is switched to 1.46MHz, and when it is increased to 1MHz, the frequency returns to 0.96MHz (Figure 5). By changing the 1MHz band in synchronization with the display frequency, the 1MHz comparison PLL circuit is locked and LO1 is generated.

In Table 5, the 0.96MHz base indicates the DDS output when the frequency is multiple MHz. The frequency (UNV) indicates the decimal digits of the MHz frequency. (If the display frequency is 14.2MHz, (UNV) = 0.2MHz.) DDS is switched by 500kHz, so – 0.5MHz ≤ (UNV) < 0.5MHz.

As described in the slope tuning section, slope tuning high-cutting is corrected for LO1, so the correction is added to the DDS output. SSB H in Table 5 indicates the correction. Table 3 shows the actual correction of SSB H. (For example, when the high frequency is 2.2kHz, the correction SSB H is 0.2kHz.)

Since RIT and XIT change the receive and transmit frequencies by the preset amount, it needs to be corrected. They are D RIT and D XIT in Table 5.

The "8.83MHz window-joining" (D 883) in Table 5 is determined during adjustment. For example, the equation for calculating the DDS output frequency for 14.2MHz USB. The high-cut frequency is assumed to be 2.6kHz. (D 833 is zero.)

DDS1 : 0.96M – (UNV) – (OFS SSB) + (SSB H)
= 0.96M – 0.2M – 1.2k – 0.2k
= 758.6kHz
0.96M : Base
UNV : 14.2M – 14.0M = 0.2M
OFS SSB (Filter offset) : 1.2k
SSB H (Slope HI) : –0.2k (See table 3.)

The LO1 output frequency f_{LO1} is calculated from the frequency configuration in Figure 6.

$f_{LO1} = f_{PLL\ IN} + 60MHz - (4MHz + f_{DDS1})$
$= 32MHz + 60MHz - (4MHz + 758.6kHz)$
$= 87.2414MHz$

Where $f_{PLL\ IN}$ is the PLL input frequency and f_{DDS1} is the DDS1 output frequency.

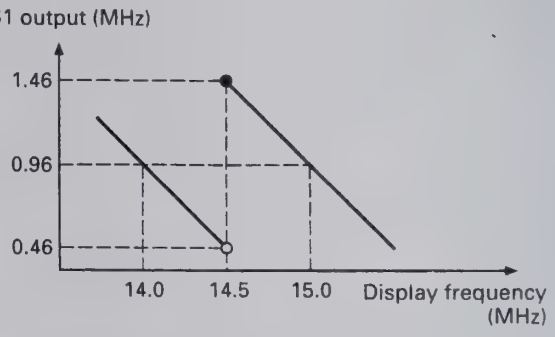

Fig. 5 Relationship between display frequency and DDS output frequency

2) LO3

Table 6 lists the LO3 frequency configuration.

The LO3 frequency is 8.375MHz, and is generated by the chopper circuit. The DDS2 output frequency is 1.625MHz. For LO3, slope tuning low-cut/high-cut is corrected. SSB H and SSB L in Table 6 indicate the corrections. D 833 and D 455 are values determined during filter window-joining and adjustment.

For example, if USB is 14.2MHz, high-cut frequency is 2.6kHz, and low-cut frequency is 300Hz, the LO3 frequency is calculated as follows. It is assumed that D 833 and D 455 are zero.

$f_{LO3} = 1.625MHz + (SSB\ H) + (SSB\ L)$
$= 1.625MHz + (-0.2kHz) + 300Hz$
$= 1625.1kHz$

CIRCUIT DESCRIPTION

3) LO4

Table 7 lists the LO4 frequency configuration.

For LO4, correction (OFS SSB) is carried out so that a signal passes through a filter according to the mode, and the slope tune low-cut (SSB L) is corrected. The mode offset is the frequency (11.30859375kHz) used for processing by the DSP, and its sign changes with the mode.

For example, if USB is 14.2MHz and the low-cut frequency is 300Hz, the LO4 output frequency is calculated as follows.

fLO4 = 455kHz + (mode offset) + (OFS SSB) + (SSB L)
= 455kHz + 11.30859375kHz + 300Hz
= 467.8085938kHz

The filter is corrected according to each mode by LO1 and LO4, slope tuning high-cut is corrected by LO1 and LO3, and low-cut is corrected by LO3 and LO4.

In other modes, each local frequency is determined by the calculation method as shown previously in Tables 5 to 7.

Component	DDS1 (1HZ)															
	LSB		USB		CW		CW-R		FSK		FSK-R		AM		FM	
	RX	TX	RX	TX	RX	TX	RX	TX	RX	TX	RX	TX	RX	TX	RX	TX
BASE	0.96MHz*6															
Frequency (100kHz or less)	– (UNV)															
Mode offset																
Filter offset*1	+ (OFS SSB)	+2k	– (OFS SSB)	–2k	–800		+800									
CW pitch					+ (PITCH)		– (PITCH)									
FSK tone (H/L)																
FSK shift (polarity)																
RIT	– (D RIT)		– (D RIT)		– (D RIT)		– (D RIT)		– (D RIT)		– (D RIT)		– (D RIT)		– (D RIT)	
XIT		– (D RIT)		– (D RIT)		– (D RIT)		– (D RIT)		– (D RIT)		– (D RIT)		– (D RIT)		– (D RIT)
Slope high*2, 3	– (SSB H)		+ (SSB H)		+ (CW H)		– (CW H)		– (FSK H)		+ (FSK H)					
Slope low																
8.83MHz window-joining*4, 5	– (D 883)			+ (D 883)												
455kHz window-joining																

*1 : Although receiver data has an independent value for each mode, the data area for calculation is D OFFSET.
Transmitter data is fixed because the 8.83MHz filter bandwidth is fixed.

*2 : Although it has an independent value for each mode, the data area for calculation is D SLOP L.

*3 : The slope low-cut is carried out at 455kHz and high-cut is carried out at 8.83MHz.

*4 : The LSB and USB may have the same value because the filter bandwidth is wide.

*5 : The positive direction for adjustment is the direction in which the receive carrier frequency increases.

*6 : The DDS1 variable frequency is 1.45MHz and is shifted by 500kHz.

Table 5 LO1 frequency configuration

CIRCUIT DESCRIPTION

Component	DDS2 (LO3)															
	LSB		USB		CW		CW-R		FSK		FSK-R		AM		FM	
	RX	TX	RX	TX	RX	TX	RX	TX	RX	TX	RX	TX	RX	TX	RX	TX
BASE	1.625MHz*6															
Mode offset																
Filter offset																
CW pitch																
FSK tone (H/L)																
FSK shift (polarity)																
RIT/XIT																
Slope high*1 3	– (SSB H)		+ (SSB H)		+ (CW H)		– (CW H)		– (FSK H)		+ (FSK H)					
Slope low*2, 3	– (SSB L)		+ (SSB L)		+ (CW L)		– (CW L)		– (FSK L)		+ (FSK L)					
8.83MHz window-joining*4, 5	– (D 883)			+ (D 883)												
455kHz window-joining*4 5	+ (D 455)			– (D 455)												

*1 : Although it has an independent value for each mode.

*2 : Although it has an independent value for each mode.

*3 : The slope low-cut is carried out at 455kHz and high-cut is carried out at 8.83MHz.

*4 : The LSB and USB may have the same value because the filter bandwidth is wide.

*5 : The positive direction for adjustment is the direction in which the receive carrier frequency increases.

*6 : Since the DDS2 output frequency is high, 1.625MHz (10MHz – output frequency (8.375MHz)) is output to the DDS.

Table 6 LO3 frequency configuration

Component	DDS3 (LO4)															
	LSB		USB		CW		CW-R		FSK		FSK-R		AM		FM	
	RX	TX	RX	TX	RX	TX	RX	TX	RX	TX	RX	TX	RX	TX	RX	TX
BASE	455kHz															
Mode offset (kHz)	–11.30859375		+11.30859375		+11.30859375		–11.30859375		–11.30859375		+11.30859375		+11.30859375		+11.30859375	
Filter offset*1	– (OFS SSB)	–2k	+ (OFS SSB)	+2k	+800		–800									
CW pitch																
FSK tone (H/L)									–2125 /–1275		+2125 /+1275					
FSK shift (polarity)											+ (FSK S)	+ (FSK S)				
RIT/XIT																
Slope high																
Slope low*2 3	– (SSB L)		+ (SSB L)		+ (CW L)		– (CW L)		– (FSK L)		+ (FSK L)					
8.83MHz window-joining																
455kHz window-joining*4 5	– (D 455)			+ (D 455)												

*1 : Although receiver data has an independent value for each mode.
Transmitter data is fixed because the 8.83MHz filter bandwidth is fixed.

*2 : Although it has an independent value for each mode.

*3 : The slope low-cut is carried out at 455kHz and high-cut is carried out at 8.83MHz.

*4 : The LSB and USB may have the same value because the filter bandwidth is wide.

*5 : The positive direction for adjustment is the direction in which the receive carrier frequency increases.

Table 7 LO4 frequency configuration

CIRCUIT DESCRIPTION

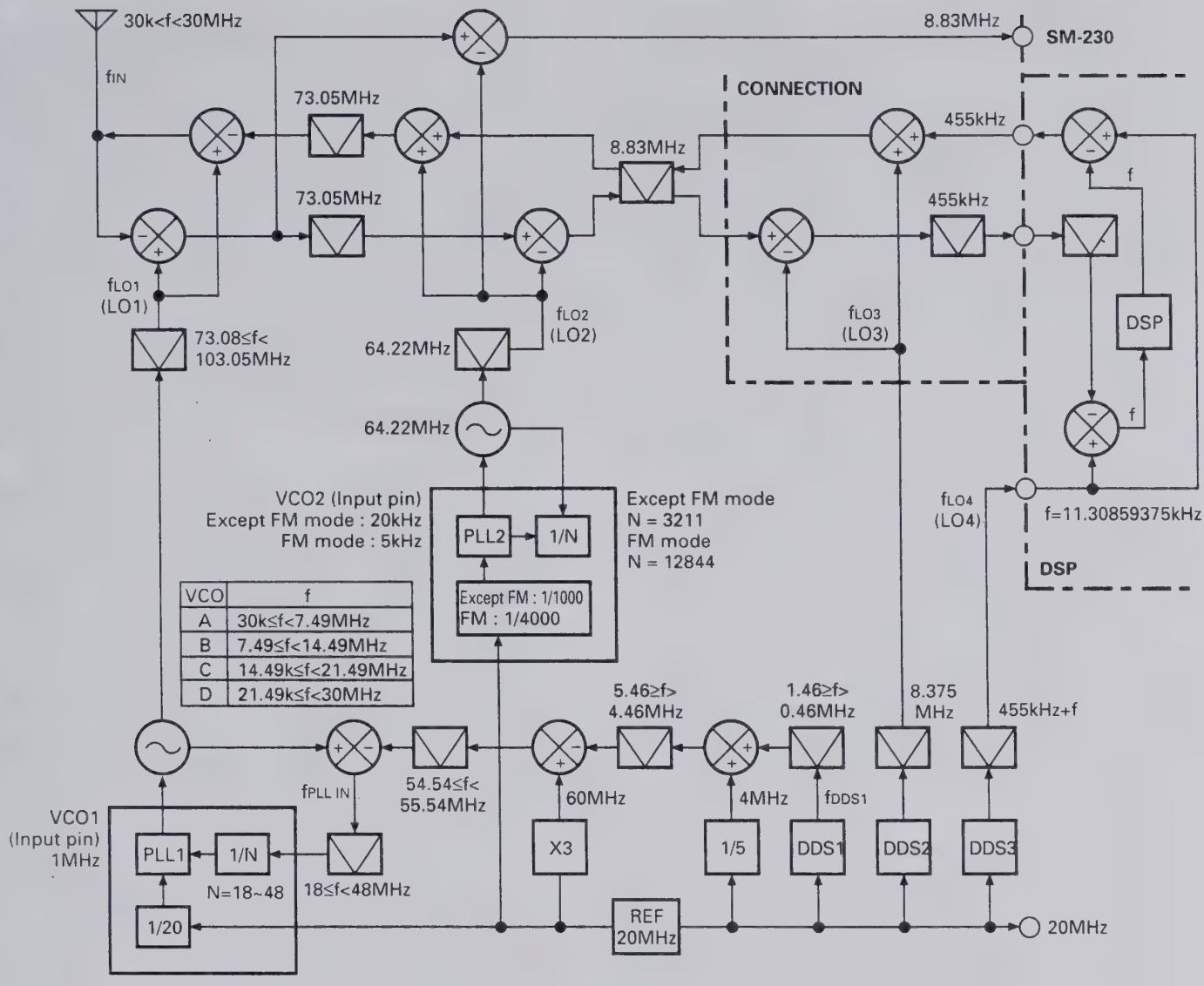

Fig. 6 Frequency configuration

CIRCUIT DESCRIPTION

Transmitter Circuit

The transmitter system block diagram is shown in Figure 7.

The TS-870S has the same frequency configuration as the TS-850 after the DSP generates the IF signal and converts it to 455kHz as a basic configuration.

A difference from the conventional model other than DSP modulation is that the TS-870S uses a digital-to-analog converter and a microcomputer for various controls. This allows for fine control and reduces the number of controls needed for adjustment.

The TIF (second IF) signal output from the TX-RX unit goes to the final unit (C/5 connection section). The signal is converted from 455kHz to 8.83MHz. The 8.83MHz third IF signal converted by the Q470 and Q471: 3SK131(M) mixer is switched to the transmitter by the D450 diode switch, and output from CN412 to the RF unit (A/9 RF section) as TR88 signal.

The signal input to CN10 of the RF unit is passed through the 8.83MHz IF filter used for both transmission and reception. During transmission, XF3 BW: 5kHz is selected by D69 and D67 and the filter attenuates the components outside the band. The transmit signal switched by D68 is amplified and ALC-controlled by the Q39 ALC amplifier, and the resulting signal goes to the D49 TX gain control circuit. This circuit controls the gain at the transmission stage according to the given voltage via a variable attenuator of a pin diode. The control voltage is controlled by a microprocessor, and is used to set the gain for each band or set the gain with the PWR knob and mode.

The third IF signal is then converted to the 73.05MHz fourth IF signal by the Q37 and Q38 : 3SK131(M) mixer. The signal is passed through the LC filter, and is converted to the target frequency by the final local oscillator LO1 at the Q35 and Q36 : 3SK184(R) mixer. The signal is passed through the radiation filter and the band-pass filter used by both the transmitter and receiver sections to attenuate the spurious outside the band. The band-pass filter output is amplified by Q5 : 2SC2954, and output to the final unit (A/5 final section) from CN4 as the drive signal.

■ TX-AGC

The DSP controls the input level until it starts modulation. It is like AGC applied to the microphone amplifier, and when the input level exceeds the certain level, the amplifier gain decreases to keep the modulator input level constant, i.e., to keep the IF output constant.

The MIC gain control in SSB and AM modes is used to adjust the maximum gain of the AGC amplifier in the 40dB range. Even if the control is set maximum, the input level to the modulator is kept constant. If the PROC is OFF in SSB mode, the CAR level (TIF output level) is fixed, and the ALC effect is limited. If the PROC is ON in SSB mode, the ALC effect is adjusted by the CAR control. The microphone amplifier gain is fixed, but the speech processor input level is controlled by the AGC and then becomes the level set by the PROC control.

In FM mode, the microphone amplifier sensitivity can be changed to high or low by using Menu No.61. Since the frequency deviation is limited by the TX-AGC, it is not distorted extremely like in the clipper method. In AM mode, the sensitivity is controlled so that modulation does not exceed 70%.

The TX-AGC is required to stabilize the DSP modulator operation. The modulator may operate without using the AGC by reduction of the gain and input level, but it cannot be completely turned OFF. Care must therefore be taken when measuring the ALC properties and frequency characteristics.

CIRCUIT DESCRIPTION

AT Unit (Auto Antenna Tuner)

When the AUTO/THROUGH switch is set to AUTO, ATA goes LOW, the AUTO/THROUGH switching relay K1 is executed, and AT is inserted to prepare for tuning. If "RX AT ON" is set in menu No.8, AT is inserted during reception. If the position of variable capacitor VC1 or VC2 is not the preset position of the band, presetting is performed. The AT tune and transmission do not occur until presetting ends.

When AT TUNE is turned on with this condition, ATS goes HIGH, the CW mode is set, and the transmission output becomes about 10W. If the SWR is lower than 1.2, the tuning is completed and auto antenna tuning ends. If the SWR is greater than 1.2, the motor control pulse duty (described later) is controlled according to the SWR.

The SWR can be set to 1.6 after AT tuning by turning menu No. 33 "TUNE WIDE" ON.

The motor speed is determined by a microcomputer. Its direction is controlled by phase comparator IC1 and amplitude comparator IC6 if the APRE is LOW, and controlled by the microcomputer if the APRE is HIGH.

■ Auto tuning mode

The transmission power from the final section via the filter section is passed through the current/voltage detection transformer L1 and L2, which use a troidal core. The current and voltage components detected here are rectified by the waveform rectification circuit consisting of D4, D7, Q1, and Q2, and then the phase is compared by IC1. The output signals ($\bar{Q}$ and Q) from pins 8 and 9 of IC1 are passed through the switch by IC2 and are applied to motor drive IC IC4. Variable capacitor VC1 is rotated by the motor M1 so that the phase difference of the voltage and current components decreases.

The voltage and current components detected by L1 and L2 are rectified by diodes D1 and D2 and are applied to the comparator of voltage comparison circuit IC6 as the amplitude component. The comparator output is passed through switch IC3. Motor M2 is driven by another motor drive IC IC5 and variable capacitor VC2 is rotated in the direction that decreases the amplitude difference of the voltage and current components.

Variable capacitor VC1 for capacity adjustment is therefore controlled so that the current and voltage phases match. Variable capacitor VC2 for resistance adjustment is controlled so that the current and voltage amplitude difference decreases. SWR becomes 1 when the phases match and the amplitude difference is zero.

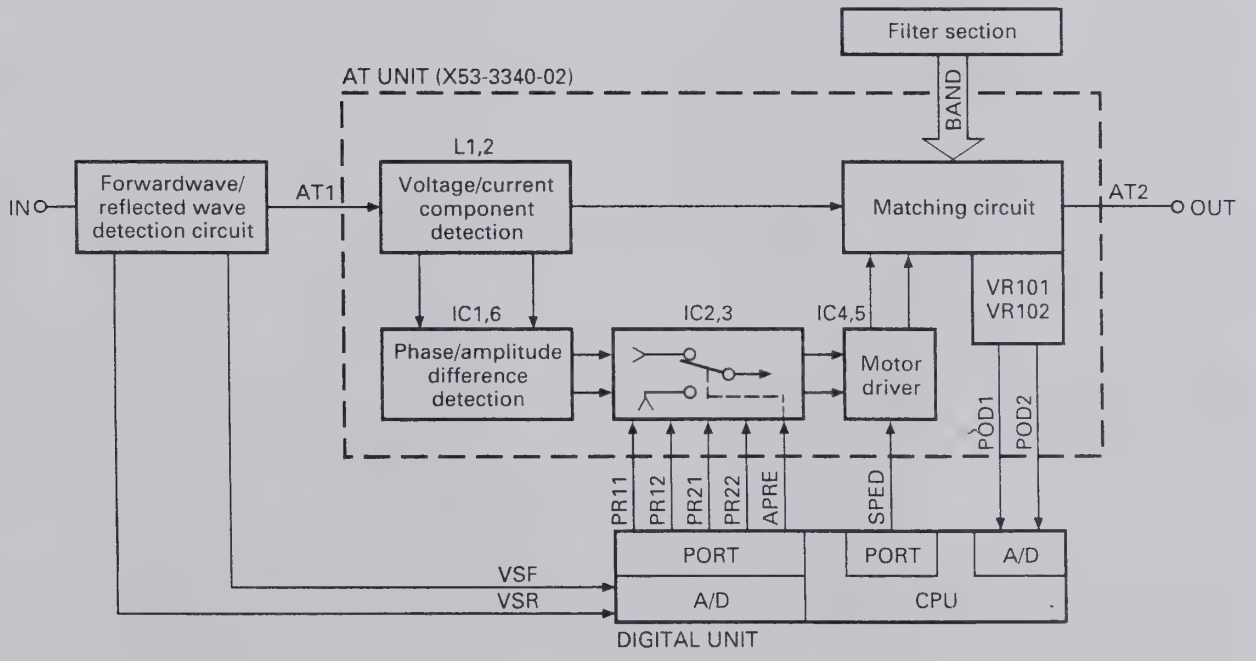

Fig. 9 AT unit block diagram

CIRCUIT DESCRIPTION

The speeds of motors M1 and M2 are determined by the duty cycle of the pulse input to control input pin 8 of IC4 and IC5, and controlled by the standing wave ratio (SWR) calculated by the control unit CPU.

Pulse signal SPED output from the control unit is passed through Q5 : DTC114EK, amplified by Q4, and input to IC4 and IC5 as a control pulse.

If the SWR is 2 or more, the duty cycle of the motor drive voltage pulse is 100%. If the SWR is 1.5 to 2, the duty cycle becomes approx. 80%. If the SWR is less than 1.5, the duty ratio becomes approx. 50% and the motor runs at low speed.

The matching circuit is T type, and the tap position from 1.8 to 30MHz is switched by seven relays K101 to K103 and K105 to K108.

Position detection volumes VR101 and VR102 are linked to the rotation axes of variable capacitors VC1 and VC2 with a gear ratio of 1 : 1. The voltages of 0 to 5V (POD1 and POD2) are generated according to the capacities of the variable capacitors. This position voltage data is sent to the microprocessor in the control unit through the analog to digital converter, and is used as the reference voltage in the feedback control system, such as for preset tuning. The same signal is also used for presetting data and end-detection.

The volume used by the TS-870S is a normal one, not an endless one. Since the rotation angle of this volume is limited, the rotation range is from the minimum capacity to the maximum capacity plus allowance.

By this control, like the preset tuning, which will be described later, POD1 and POD2 are monitored by the microprocessor. If the lower limit voltage of 0.6V or the upper limit voltage of 4.2V is reached, the microprocessor detects that the voltage is close to a limit. To return the voltage to the opposite side, APRE is made HIGH. If the variable capacitor is VC1, and the voltage is close to the lower limit in respect to POD1, the voltage near the upper limit is output. If the voltage is close to the upper limit in respect to POD1, the voltage near the lower limit is output.

The other variable capacitor VC2 outputs the voltage read by POD2 as it is. If the variable capacitor voltage exceeds the specified limit, it returns to the other limit. The other variable capacitor remains in the same position.

If the APRE is HIGH, the motor rotation direction is determined by the CPU unless auto tuning is performed.

The logic for PR11 to PR22 is the same as for IC4 and IC5 : BA6109U2. The signal output from the digital unit passes through IC2 and IC3 : TC4066BP and enters IC4 and IC5.

		PR11	PR12	PR21	PR22
Motor 1	Normal rotation	H	L	–	–
	Reverse rotation	L	H	–	–
Motor 2	Normal rotation	–	–	H	L
	Reverse rotation	–	–	L	H

■ Preset tuning

When tuning ends, the position of the variable capacitor is stored in memory by the microprocessor as preset data for that band.

When the band is changed after tuning is performed in another band, APRE goes HIGH, the motor is controlled by the microprocessor, and preset tuning is performed. During preset tuning, auto tuning or signal transmission is inhibited even if the AT TUNE switch is pressed or transmission becomes ready.

The initial preset-data when the microprocessor is reset includes standard data for a 50-ohm load on each band.

■ Preset memory band

30kHz ≤ f
1.850MHz ≤ f
2.010MHz ≤ f
3.525MHz ≤ f
3.575MHz ≤ f
3.725MHz ≤ f
4.490MHz ≤ f
7.030MHz ≤ f
7.100MHz ≤ f
7.490MHz ≤ f
10.490MHz ≤ f
14.100MHz ≤ f
14.490MHz ≤ f
20.990MHz ≤ f
21.150MHz ≤ f
21.990MHz ≤ f
25.490MHz ≤ f
29.000MHz ≤ f

CIRCUIT DESCRIPTION

Standby Control and Timing

Standby control and timing are carried out by using software for the main CPU in the control unit (X53-356X-XX). The control signals for the control unit are listed below. (See Figure 10 for each timing chart.)

SS : Standby switch input signal. Active LOW.
KEY : Keying input signal from the keyer. Active LOW.
TXC : Transmission output signal. Active HIGH. Same timing as TXB.
RXC : Reception output signal. Active HIGH. Same timing as RXB.
CKY : Output signal. Active HIGH.

With the SS line

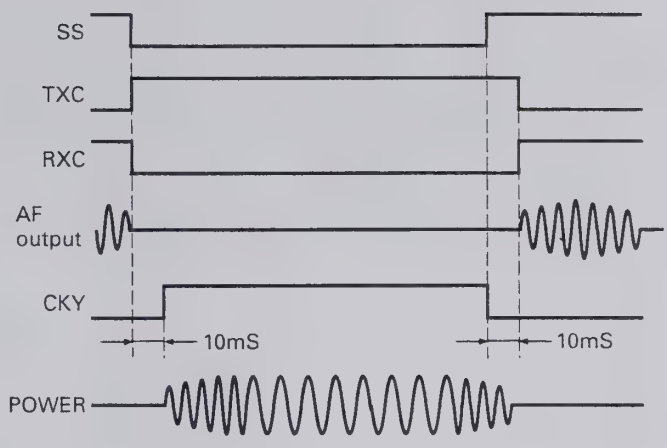

By full break-in

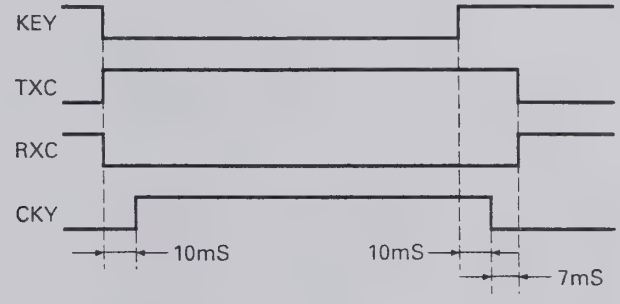

by semi break-in

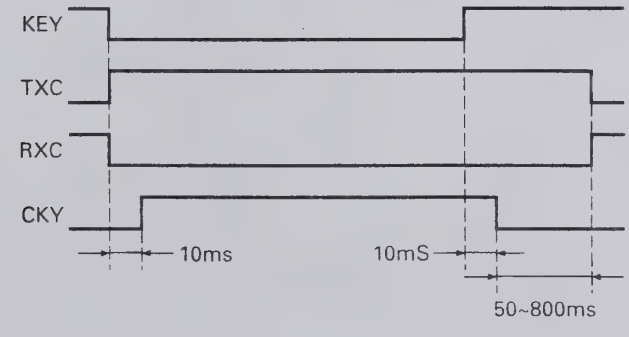

Fig. 10 Transmit/receive signal timing chart

CIRCUIT DESCRIPTION

Digital Control Unit

The TS-870S digital control circuit has a multiple chip configuration centered around the main CPU (IC6 : M37702S4BFP), and consists of a 64K ROM (IC12 : 27C512RJLVC), an 8K RAM (IC8 : LC3564QME-10), and an extended I/O (IC16, IC22, IC23 : CXD1095Q). This circuit controls about 60 different input and about 80 different output signals.

Figure 11 is a digital control block diagram.

■ Address control

The main CPU operates in the microprocessor mode in which the external ROM is used. The memory is configured as shown in the memory map, and the main CPU A12 to A15 and D0 signals and IC14, IC17, IC18, and IC19 are used to generate a chip select (CS) signal to select and access an IC. (Figure 12)

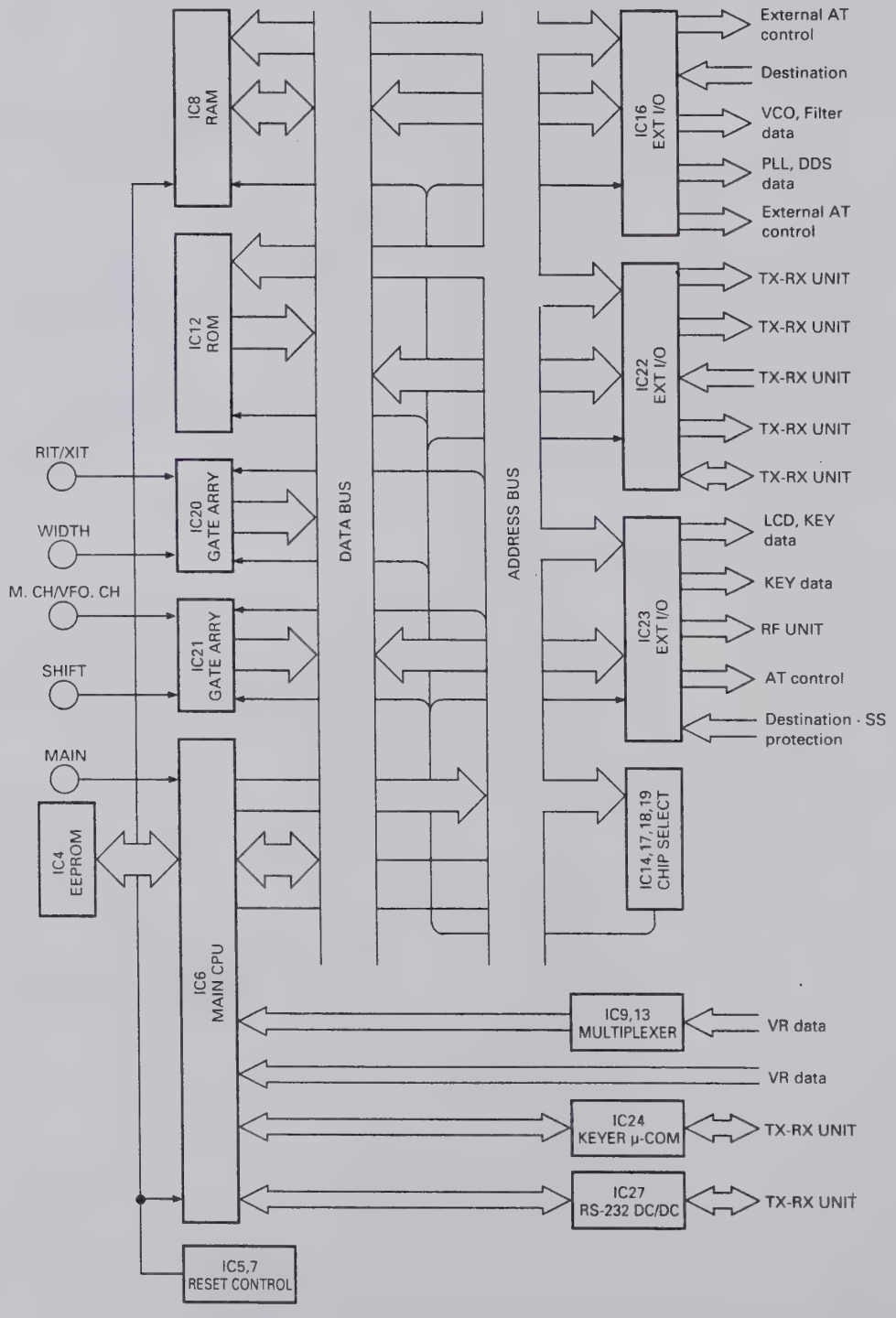

Fig. 11 Digital control block diagram

CIRCUIT DESCRIPTION

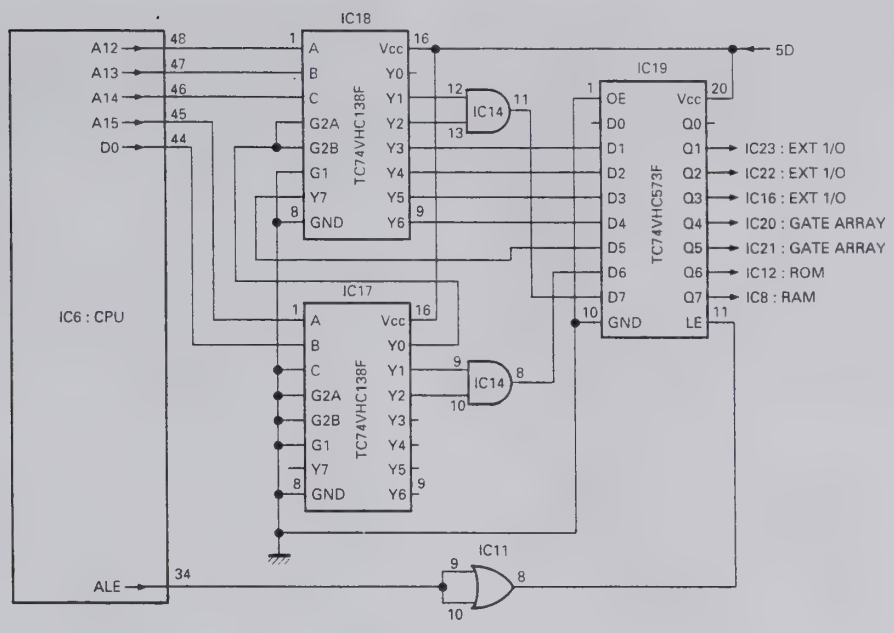

Fig. 12 Address control circuit

■ Encoder circuit

The main encoders are magnetic rotary encoders, and the click, RIT, SHIFT, and WIDTH encoders are contact-type rotary encoders.

The main encoder pulses are read directly by the main CPU.

The other encoder pulses enter the gate array (IC20 and IC21 : LZ92K371), and are read through the main CPU data bus. The gate array is selected by the latch (IC19 : TC74VHC573F) Q4 and Q5. The CK1, CK2 or CK3, CK4 encoder is selected by A0 of the gate array. Encoder data is output to D0 to D7 by making the read signal (RD) LOW when the chip select (CS) signal is LOW. IC25 and IC26 absorb encoder pulse chattering. (Figure 13)

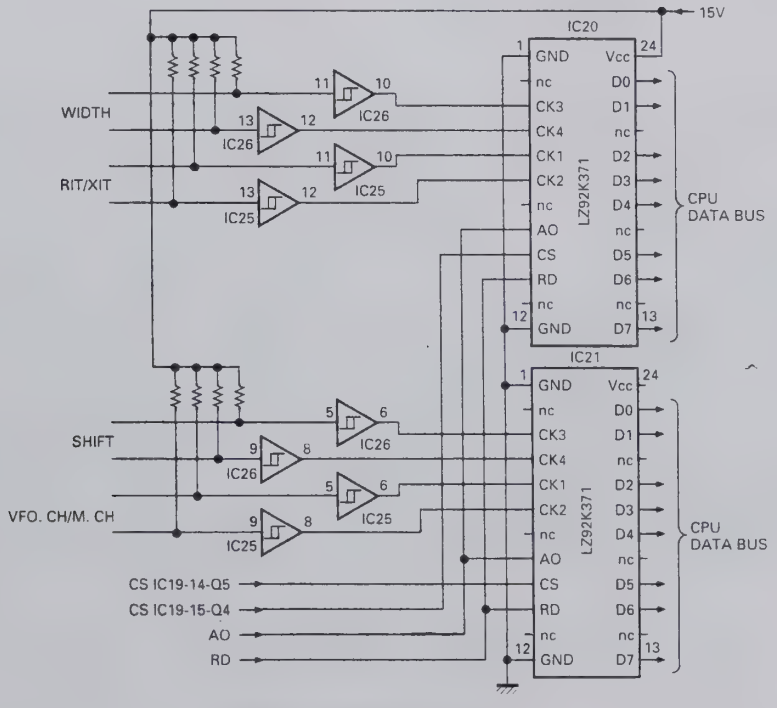

Fig. 13 Encoder circuit

CIRCUIT DESCRIPTION

■ System reset and RAM backup

The power monitor circuit (Q1, Q2, D4, D5, R6) monitors the power supply voltage. If the voltage is LOW, the circuit outputs a LOW signal to the INT1 port of the main CPU and the IRQ2 port of the microprocessor in order for the electronic keyer to stop operation. At the same time, the battery backup IC (IC5 : MB3780A) backs up the RAM with a lithium battery.

If the power supply voltage becomes normal, a HIGH signal is input to the INT1 port and the IRQ2 port, and the main CPU is initialized by the battery backup IC after the time constant set by C56 and C57. The operation resumes and power is supplied to the RAM from the outlet. (Figure 14)

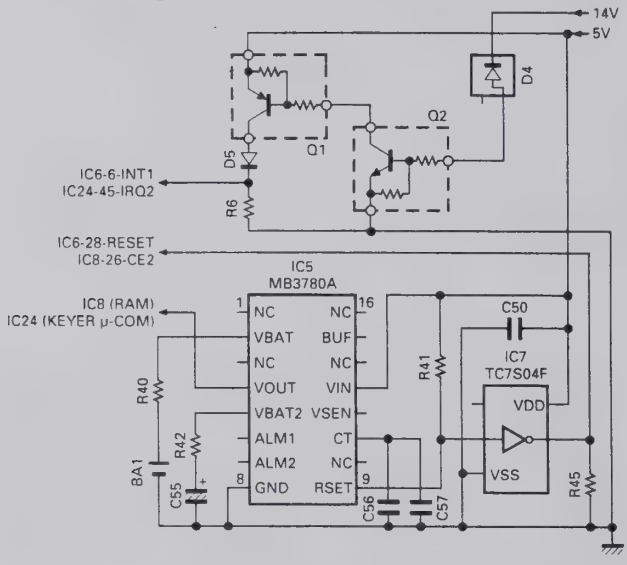

Fig. 14 System reset and RAM backup

■ Analog Signal Input

The main CPU incorporates an 8-channel analog-to-digital (A/D) converter, and in addition, has a multiplexer (IC9 and IC13 : TC4052BF) for entering 16-channel analog signals. Incoming analog signals are converted by the main CPU to digital values, which are used as digital data.

■ Display

Since the TS-870S uses a negative LCD and a fluorescent display tube.

The LCD is lighted with half a duty by the LCD driver, and the fluorescent display tube is lighted by an inverter.

The LCD driver data is set by the clock signal (UCK1), data signal (UDA1), and enable signals (ENL2, ENL3). The blanking signal (BLANK) turns the LCD driver OFF, and the dimmer signal (DIM) changes the inverter duty for dimmer.

■ Key scan

The PB0 and PB7 of IC23 and O2 to O8 of IC501 form a keyboard matrix. A key scan signal (a negative pulse) is output from the O2 to O8. One column corresponding to the PB0 and PB7 is selected, and the state of that switch is read. When the switch at the intersection of the matrix is pressed, the PBx port bit goes LOW. Thus, which switch is pressed can be detected. The key chattering is eliminated by software. (Figure 15)

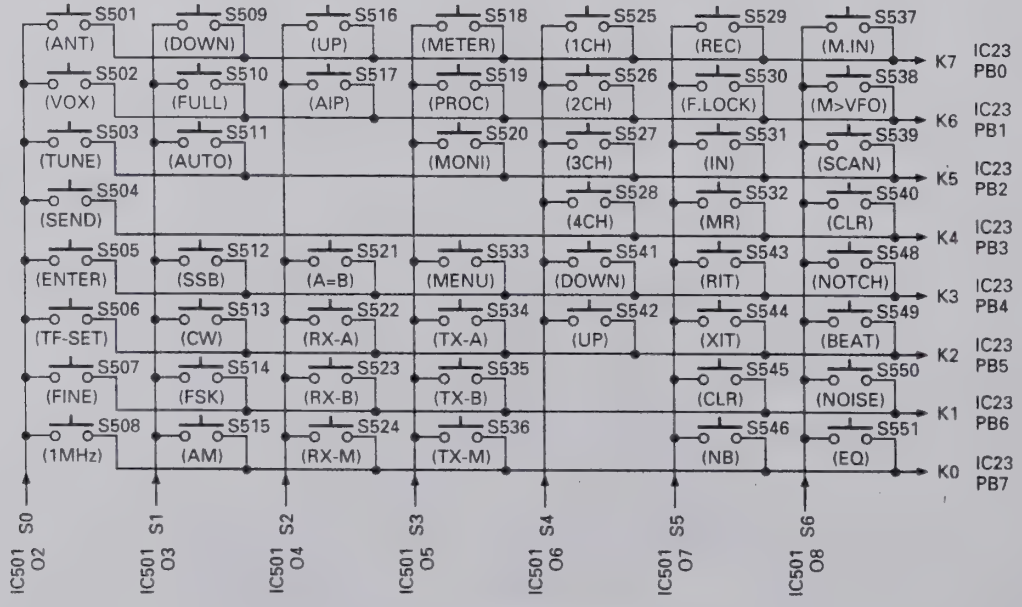

Fig. 15 Key scan circuit

CIRCUIT DESCRIPTION

■ PLL and DDS data

The TS-870S has three PLLs and three DDSs in the PLL section in the RF unit. The main CPU sends data to the PLL ICs and DDS ICs according to the displayed frequency. The PLL ICs provide unlock (UNL) signals. If one of the PLLs should unlock, the display indicates that the PLL is unlocked (Err-FE).

The TX-RX unit also has a PLL IC, to which the main CPU sends 46.32MHz data. The PLL IC also outputs an unlock signal (PLUL), and if a PLL is unlocked, an unlock message (Err-FD) is displayed.

■ AT control

The AT control inputs the variable capacitor position data (POD1, POD2, analog data input), forward wave voltage and reflected wave voltage (VSF, VSR, analog data input) for SWR calculation in the main CPU, and outputs the motor normal/reverse rotation control (PR11, PR12, PR21, PR22), motor speed control signal (SPED), and motor control switching signal (APRE).

SPED switches the motor rotation ON and OFF during AT tune and presetting by PWM with the duty cycle related to the SWR value.

APRE changes the motor normal/reverse rotation control to analog control for AT tune, and to digital control for presetting.

PR11 to PR22 control the motor normal/reverse rotations and stop when the motor normal/reverse control signal is controlled digitally. (Figure 16)

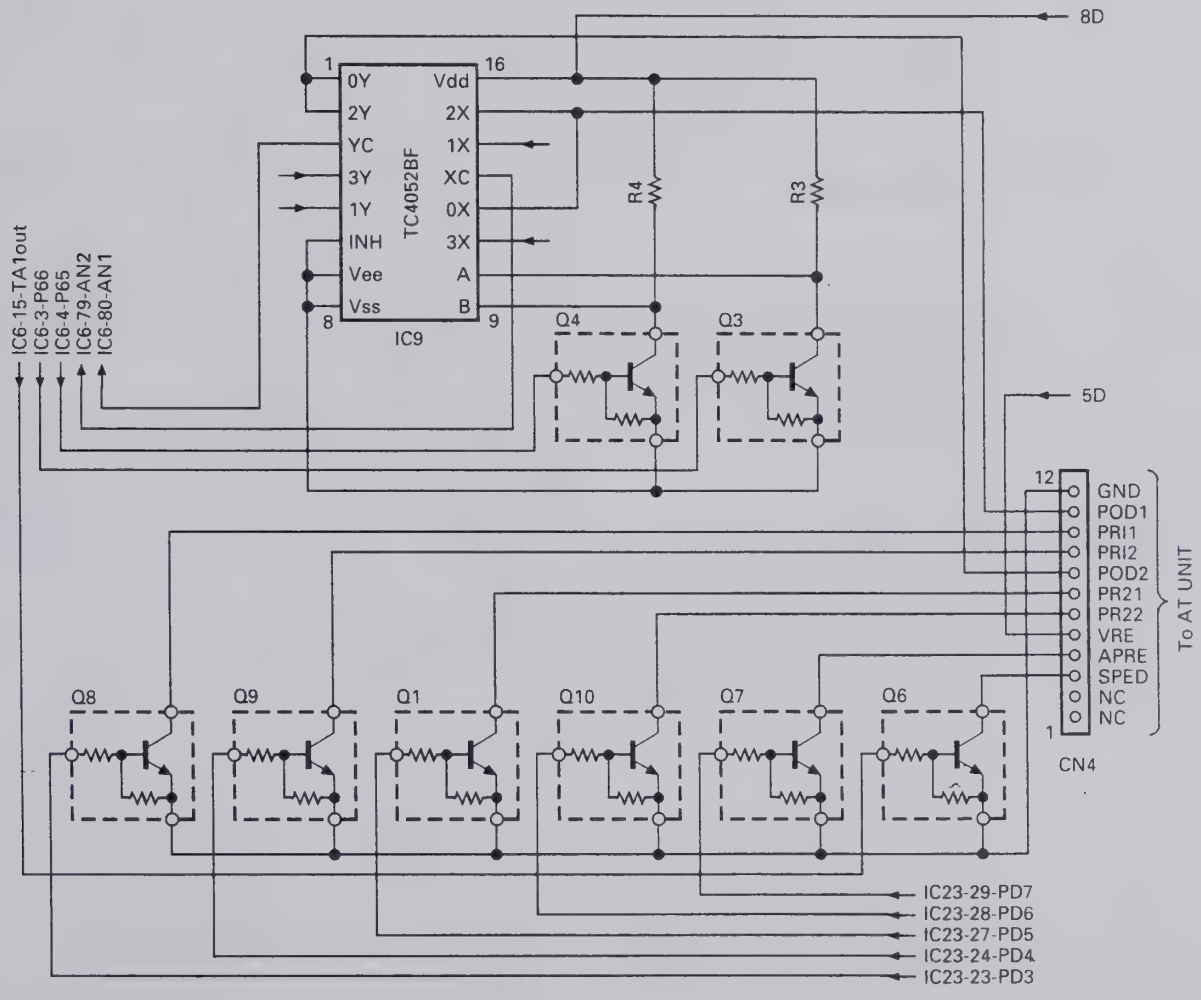

Fig. 16 AT control

CIRCUIT DESCRIPTION

■ IF filter switching

The IF filter switching signal from the control unit is controlled by PC0 to PC2 (pins 11 to 13) of IC23 and sent to the RF unit and final unit connection section.

The RF unit selects the 8.83MHz IF filter, and the final unit connection section selects the 455kHz IF filter.

The IF filter select signal is automatically interlocked with the WIDTH control.

SSB		CW		FSK		AM		FM	
WIDTH	IF FILTER	WIDTH	IF FILTER	WIDTH	IF FILTER	WIDTH	IF FILTER	WIDTH	IF FILTER
1.4k	3k	50	3k	250	3k	5.0k	6k	5.0k	15k
1.6k	↑	200	↑	500	↑	6.0k	15k	6.0k	↑
1.8k	↑	300	↑	1.0k	↑	8.0k	↑	8.0k	↑
2.0k	↑	400	↑	1.5k	↑	10.0k	↑	10.0k	↑
2.2k	↑	600	↑			12.0k	↑	12.0k	↑
2.4k	↑	1.0k	↑			14.0k	↑	14.0k	↑
2.6k	6k								
2.8k	↑								
3.0k	↑								
3.2k	↑								
3.4k	↑								
4.6k	↑								
6.0k	15k								

Table 9 IF filter selection

■ Receive band-pass filter selection

The RF BPF signal from the control unit is sent from PC6 (pin 17) of IC23 to the RF unit as serial data. The serial-to-parallel converter (TC9174F) in the RF unit converts serial data to parallel data and switches between band-pass filters.

■ Transmit low-pass filter selection

The LPF signal from the control unit is sent as serial data from PC1 (pin 12) of IC16 to the final unit filter section via the final unit connection section. The serial-to-parallel converter (TC9174F) in the final unit filter section converts serial data to parallel data and switches between low-pass filters.

■ PLL VCO data

The RF unit PLL section switches between VCOs according to the VCO band data (VB0 to VB3) output from PC4 to PC7 (pins 15 to 18) of IC16 in the control unit.

■ Electronic keyer

The TS-870S uses a dedicated IC (IC24 : 68HC05G2419553) to control the electronic keyer. The main CPU CH1 to CH4 signals switch operations to the electronic keyer IC (keyer microprocessor).

The keyer microprocessor controls the electronic keyer according to KEY SPEED VR data, DOT/DASH signal, and CH1 to CH4 signals switch operation signals from the main CPU.

The keyer microprocessor is normally at the standby mode (power save mode). Each control signal is connected to PB7 (pin 77). When this port is LOW, the standby mode is terminated.

When the standby mode is cancelled, PA7 (pin 30) outputs a HIGH signal. It is used to determine which control signal is active : CH1 to CH4, KEY SPEED VR data, or DOT/DASH signal.

PA2 (pin 25) is an input/output port that inputs KEY SPEED VR data and outputs control signal (HIGH) for VR data determination.

When a HIGH signal is output from PA2 (pin 25), C114 is charged. KEY SPEED VR data is calculated until C114 is discharged and the port goes LOW.

IRQ2 (pin 41) is an interrupt port that detects power supply voltage drop. When this port detects it, the standby mode is entered.

The keyer microprocessor outputs the key down and beep signals. The key down signal is input to IC22 (PC4 : pin 15), and the main CPU controls transmission and reception. The beep signal is input to IC29 (TC7S32F : OR gate) and output to the TX-RX unit as CKY.

The TX-RX unit determines the key jack ON/OFF and CKY level and outputs sidetone.

CIRCUIT DESCRIPTION

■ Band data

Frequency (MHz)		RF BPF (RB)		LPF	VCO				PLL
Lower limit	Upper limit	RX	TX		A	B	C	D	N
0.01	0.49	1	1	1	1	0	0	0	38
0.49	0.99	2	2						38
0.99	1.705								37
1.705	2.01	3	3						37
2.01	2.49			2					36
2.49	2.99	4	4						36
2.99	3.49								35
3.49	3.99								35
3.99	4.49	5	5						34
4.49	4.99			3					34
4.99	5.49								33
5.49	5.99								33
5.99	6.49								32
6.49	6.99								32
6.99	7.3	6	6						31
7.3	7.49	7	7						31
7.49	7.99			4	0	1	0	0	31
7.99	8.49								30
8.49	8.99								30
8.99	9.49								29
9.49	9.99								29
9.99	10.49								28
10.49	10.99	8	8	5					28
10.99	11.49								27
11.49	11.99								27
11.99	12.49								26
12.49	12.99								26
12.99	13.49								25
13.49	13.99								25
13.99	14.35	9	9						24
14.35	14.49	10	10						24
14.49	14.99			6	0	0	1	0	24
14.49	15.49								23

Frequency (MHz)		RF BPF (RB)		LPF	VCO				PLL
Lower limit	Upper limit	RX	TX		A	B	C	D	N
15.49	15.99	10	10	6	0	0	1	0	23
15.99	16.49								22
16.49	16.99								22
16.99	17.49								21
17.49	17.99								21
17.99	18.49								20
18.49	18.99								20
18.99	19.49								19
19.49	19.99								19
19.99	20.49								18
20.49	20.99								18
20.99	21.49	11	11						17
21.49	21.99	12	12		0	0	0	1	17
21.99	22.49			7					16
22.49	22.99								16
22.99	23.49								15
23.49	23.99								15
23.99	24.49								14
24.49	24.99								14
24.99	25.49								13
25.49	25.99			8					13
25.99	26.49								12
26.49	26.99								12
26.99	27.49								11
27.49	27.99								11
27.99	28.49								10
28.49	28.99								10
28.99	29.49								9
29.29	29.99								9
29.99	30								9

CIRCUIT DESCRIPTION

■ Function of IC pins

1) CPU : M37702S4BFP (Control unit IC6)

Pin No.	Port name	Pin name	I/O	Function	Active level	Initial state
1	AN0	ADR0	I	VPRC, VMON, VAGC signal		
2	P67	RES	O	Reset signal output	L	H
3, 4	P66, P65	CTB, CTA	O	Analog switch select control signal B, A	H	H
5	INT2	PSW	I	Power switch inhibit signal	H	
6	INT1	BOVR	I	14V voltage drop inhibit signal		
7	INT0		I	Unused		
8, 9	TA4IN, TA4OUT	EDP1, EDP2	I	Main encoder pulse input		
10, 11	TA3IN, TA3OUT		O	Unused		L
12, 13	TA2IN, TA2OUT		O	Unused		L
14	P53	AMUT	I	AF mute signal	L	H
15	TA1OUT	SPED	O	AT motor speed control	L	H
16	P51	LCD	O	LCD and LED serial data		H
17	P50	LCK	O	LCD and LED serial clock		H
18	P47	BLK	O	LCD all off control signal	H	L
19	P46	RBK	O	RF mute signal	L	L
20	P45	14VSW	O	Power on control signal	H	H
21	P44	ECS	O	EEPROM clock		H
22	P43	EED	I/O	EEPROM data		
23	PHI			Unused		
24	RDY		I	Bus wait cancel	H	
25	HORD		I	Hold state cancel	H	
26	BYTE		I	External data bus width 8 bit setting	H	
27	CNVss		I			
28	RESET		I	Reset signal input	L	
29, 30	Xin, Xout		I	Clock signal input		
31	E		O			
32	Vss		I			
33	HLDA					
34	ALE		O			
35	BHE					
36	R/W		O	Read/write signal		
37~44	D7~D0		I/O	Bus		
45~60	A15~A0		O	Address output		
61~64	P87~P84	PB0~PB3	O	Logic key CPU control 0~3	H	L
65	TXD0	TXD0	O	Personal computer interface serial output		H
66	RXD0	RXD0	I	Personal computer interface serial input		
67	P81	RTS0	O	Personal computer interface RTS	H	L
68	CTS0	CTS0	I	Personal computer interface CTS		
69	Vcc		I			
70	AVcc		I			
71	Vref		I			
72	AVss		I			
73	Vss		I			
74	AN7	ADR7	I	Forward wave voltage (VSF)		
75	AN6	ADR6	I	Reflected wave voltage (VSR)		
76	AN5	ADR5	I	ALC meter analog input		
77	AN4		I	Unused		
78	AN3	ADR3	I	VPWR, VMIC, VDLY, VCAR signal		
79	AN2	ADR2	I	POD2, VRF, POD2, VAF signal		
80	AN1	ADR1	I	POD1, VNB, POD1, VSQL signal		

CIRCUIT DESCRIPTION

2) CPU : 68HC05G2419553 (Control unit IC24)

Pin No.	Port name	Pin name	I/O	Function	Active level	Initial state
1	VDD		I			
2~5	PB3~PB0		I	CH4 to CH1 switch input signal from IC6		
6~13	AD0~AD7		I	Unused		
14	VrefH			Unconnected		
15	VrefL		I			
16	Vss		I			
17	VDD		I			
18, 19	XOSC1, XOSC2		I	Unconnected		
20	RES		I	Reset signal input		
21, 22	OSC1, OSC2		I	Clock input		
23	PA0	DOT	I	DOT input		
24	PA1	DASH	I	Dash input		
25	PA2	SPEED VR	I/O	KEY VR data determine port		
26~29	PA3~PA6		I	Unused		
30	PA7	int contro	O	Inhibit determine control signal	H	
31~33	PG0~PG2		I	Unused		
34	TCMP		I	Unconnected		
35	PG4		I	Unused		
36	PG5	EBSY	I	Unused		
37	PG6	MBSY	I	Unused		
38	PG7		I	Unused		
39~44	PC0~PC5		I	Unused		
45	IRQ2	sleep	I	14V voltage drop determine inhibit port		
46	PC7		I	Unused		
47	VDD		I			
48	PD0		I	Unused		
49	PD1	mbusy	O	Message busy signal		
50	PD2		I	Unused		
51	PD3	pbc	O	Beep output signal		
52	PD4		I	Unused		
53	PD5	KEY	O	Key signal output		
54	PD6		I	Unused		
55	PD7		I	Unconnected		
56~59	PE0~PE3		I	Unused		
60	Vss		I			
61~64	PE4~PE7		I	Unused		
65~72	PH0~PH7		I	Unused		
73~76	PJ0~PJ3		I	Unused		
77	PB7	WAKE UP	I	Wake up inhibit		
78~80	PB6~PB4		I	Unused		

CIRCUIT DESCRIPTION

3) Extended I/O : CXD1095Q (Control unit IC16)

Pin No.	Port name	Pin name	I/O	Function	Active level	Initial state
1, 2	NC					
3~7	PB1~PB5	SHIMO1~SHIMO5	I	Destination determine port	H	
8	PB6	50W	I	50W switch signal	L	
9	PB7	UNL	I	Unlock signal	H	
10	Vss		I			
11	PC0	ENF1	O	Serial/parallel convert enable	H	L
12	PC1	UDA23	O	Serial/parallel convert data		L
13	PC2	UCK23	O	Serial/parallel convert clock		L
14	PC3	NFMT	O	Control signal except FM transmit mode	L	H
15, 16	PC4, PC5	VB3, VB2	O	VCO band data	H	L
17	PC6	VB1	O	VCO band data	H	H
18	PC7	VB0	O	VCO band data	H	L
19	NC					
20	PD0	PLE2	O	VCO2 enable	H	L
21	PD1	PLE1	O	VCO1 enable	H	L
22	PD2	PCK	O	PLL clock		L
23	PD3	PDA	O	PLL data		L
24	PD4		O	Unused		L
25	Vss		I			
26	VDD		I			
27	PD5	DLE3	O	DDS3 enable	H	L
28	PD^	DLE2	O	DDS2 enable	H	L
29	PD7	DLE1	O	DDS1 enable	H	L
30~32	D0~D2		I/O	Bus		
33, 34	NC					
35~39	D3~D7		I/O	Bus		
40	CLR		I	Port E output register clear	L	
41	ODEN		I	Output disable	L	
42	Vss		I			
43	WR		I	Write signal	L	
44	RD		I	Read signal	L	
45	CS		I	Chip select signal	L	
46~48	A0~A2		I	Address signal		
49	PE0	P TTI	I	External AT TT input	H	
50	PE1	P TSI	I	External AT TS input	H	
51	NC					
52	PE2	MBSY	I	Electronic keyer busy signal		
53	PE3		I	Unused		
54	PA0	P TTO	O	External AT TT output	H	L
55	PA1	P TSO	O	External AT TS output	H	L
56	PA2		O	Unused		L
57	Vss		I			
58	VDD		I			
59~62	PA3~PA6		O	Unused		L
63	PA7	LOGKEY	O	Electronic keyer reset	H	L
64	PB0	SHIMO0	I	Destination determine port	H	

CIRCUIT DESCRIPTION

4) Extended I/O : CXD1095Q (Control unit IC22)

Pin No.	Port name	Pin name	I/O	Function	Active level	Initial state
1, 2	NC					
3~9	PB1~PB7		I/O	DSP bus		
10	Vss		I			
11	PC0		I	Unused		
12	PC1	KEYS	I	Electronic keyer connecting determine signal	L	
13	PC2	MD	I	Microphone UP switch signal	L	
14	PC3	MU	I	Microphone DOWN switch signal	L	
15	PC4	KEYI	I	Key input signal	L	
16	PC5	PLUL	I	PLL unlock in DSP	L	
17	PC6	EOM	I	DRU-3 EOM signal	H	
18	PC7	VBSY	I	VS-2 busy signal	L	
19	NC					
20	PD0	DRST	O	DSP reset signal Normally "H"	L	H
21	PD1	VCEN	O	Electronic volume DAC enable	L	H
22	PD2	UCK22	O	Serial/parallel convert clock signal		L
23	PD3	UDA22	O	Serial/parallel convert data signal		L
24	PD4	DREN	O	DRU-3 enable signal	L	H
25	Vss		I			
26	VDD		I			
27	PD5	PLEN	O	PLL enable in DSP	H	L
28	PD6	STR	O	VS-2 start signal	H	L
29	PD7		O	Unused		L
30~32	D0~D2		I/O	Bus		
33, 34	NC					
35~39	D3~D7		I/O	Bus		
40	CLR		I	Port E output register clear	L	
41	ODEN		I	Output disable	L	
42	Vss		I			
43	WR		I	Write signal	L	
44	RD		I	Read signal	L	
45	CS		I	Chip select signal	L	
46~48	A0~A2		I	Address signal		
49	PE0	HENA	O	DSP enable A	L	H
50	PE1	HENB	O	DSP enable B	L	H
51	NC					
52	PE2	HRW	O	DSP R/W signal		H
53	PE3		O	Unused		L
54~56	PA0~PA2		O	DSP address signal		L
57	Vss		I			
58	VDD		I			
59	PA3		O	Unused		L
60	PA4	P BEEP	O	Beep output signal	H	L
61	PA5	P CKY	O	Transmit output control signal	H	L
62	PA6	P RXC	O	Receive control signal	H	H
63	PA7	P TXC	O	Transmit control signal	H	L
64	PB0		I/O	DSP bus		

CIRCUIT DESCRIPTION

5) Extended I/O : CXD1095Q (Control unit IC23)

Pin No.	Port name	Pin name	I/O	Function	Active level	Initial state
1, 2	NC					
3~9	PB1~PB7	P K1~P K7	I	Key matrix input	L	
10	Vss		I			
11	PC0	6KFIL	O	Analog filter select signal	H	L
12	PC1	3KFIL	O	Analog filter select signal	H	H
13	PC2	15KFIL	O	analog filter select signal	H	L
14~16	PC3~PC5	P ENR3~P ENR1	O	RF serial/parallel convert enable	H	L
17	PC6	P UDA21	O	Serial/parallel convert data		L
18	PC7	P UCK21	O	Serial/parallel convert clock		L
19	NC					
20~22	PD0~PD2		O	Unused		L
23	PD3	P APRE	O	AT motor control signal		L
24	PD4	P PR22	O	AT motor 2 control signal		L
25	Vss		I			
26	VDD		I			
27	PD5	P PR21	O	AT motor 2 control signal		L
28	PD6	P PR12	O	AT motor 1 control signal		L
29	PD7	P PR11	O	AT motor 1 control signal		L
30~32	D0~D2		I/O	Bus		
33, 34	NC					
35~39	D3~D7		I/O	Bus		
40	CLR		I	Port E output register clear	L	
41	ODEN		I	Output disable	L	
42	Vss		I			
43	WR		I	Write signal	L	
44	RD		I	Read signal	L	
45	CS		I	Chip select signal	L	
46~48	A0~A2		I	Address signal		
49	PE0	P THP	I	Thermal protection signal	H	
50	PE1	P SS	I	Microphone PTT switch signal	L	
51	NC					
52	PE2		I			
53	PE3		O	Unused		L
54	PA0	P DIM	O	Dimmer control signal	H	H
55, 56	PA1, PA2	P ENL3, P ENL2	O	LCD driver enable signal	H	L
57	Vss		I			
58	VDD		I			
59	PA3	P LATC	O	AT LED	H	L
60, 61	PA4, PA5	P ENL1, P ENL4	O	Switch serial/parallel convert enable	H	L
62, 63	PA6, PA7		O	Unused		L
64	PB0	P K0	I	Key matrix input	L	

CIRCUIT DESCRIPTION

TX-RX Unit (DSP Operation)

■ Outline

The TS-870S uses the DSP to carry out various processing as compared with the conventional models. They include the following:

- Modulation and demodulation
- Filter processing
- AGC processing (S-meter data output)
- Mic amplifier AGC processing
- VOX processing
- Voice equalizing processing
- Noise processing (noise reduction, beat cancel, automatic notch)
- Speech processing (COMP meter data output)
- Squelch processing
- Sidetone and beep generation

The commands and data for the microprocessor are listed below (see page 42).

The TX-RX unit circuits are divided into the analog section that processes analog signals and digital section that processes digital data. The interface between the analog and digital sections is the analog-to-digital converter (IC25 : AK5340-VS) and digital to analog converter (IC16 and IC27 : AK4318-VS, IC34 : PCM69AU).

The unit has another digital to analog converter (IC26 : M62363FP) for VCA (electronic volume : M51131L) control. The volume is controlled directly by the microprocessor in the control unit (the volume is not controlled by the DSP).

■ Digital section

The digital section is explained below. Figure 17 is a digital section block diagram.

The digital section consists of two DSPs (IC1 and IC2 : DSP56002FC40), RAM (IC7 : MCM56824AFN2*), three ROMs (IC4, IC5, IC6 : 27C256PCJJ**), and gate array (IC3 : MBCG24173-6173) and PLD (IC9 : 7032LC44JLQ*). The TX-RX unit has a PLL, but it is included in the digital section for convenience. * indicates the version number.

The PLL in the TX-RX unit is controlled directly by the microprocessor in the control unit, and clocks of a fixed frequency of 46.32MHz are generated. This circuit forms a VCO consisting of Q8 : 2SK210(GR), Q9 and Q10 : 2SC2714(Y). Q8 is an oscillator and Q9 and Q10 are buffer amplifiers. Q5, Q6, and Q7 comprise an active low-pass filter. This low-pass filter converts the output from PLL IC IC15 : MB86001PF to DC voltage and sends it to the VCO.

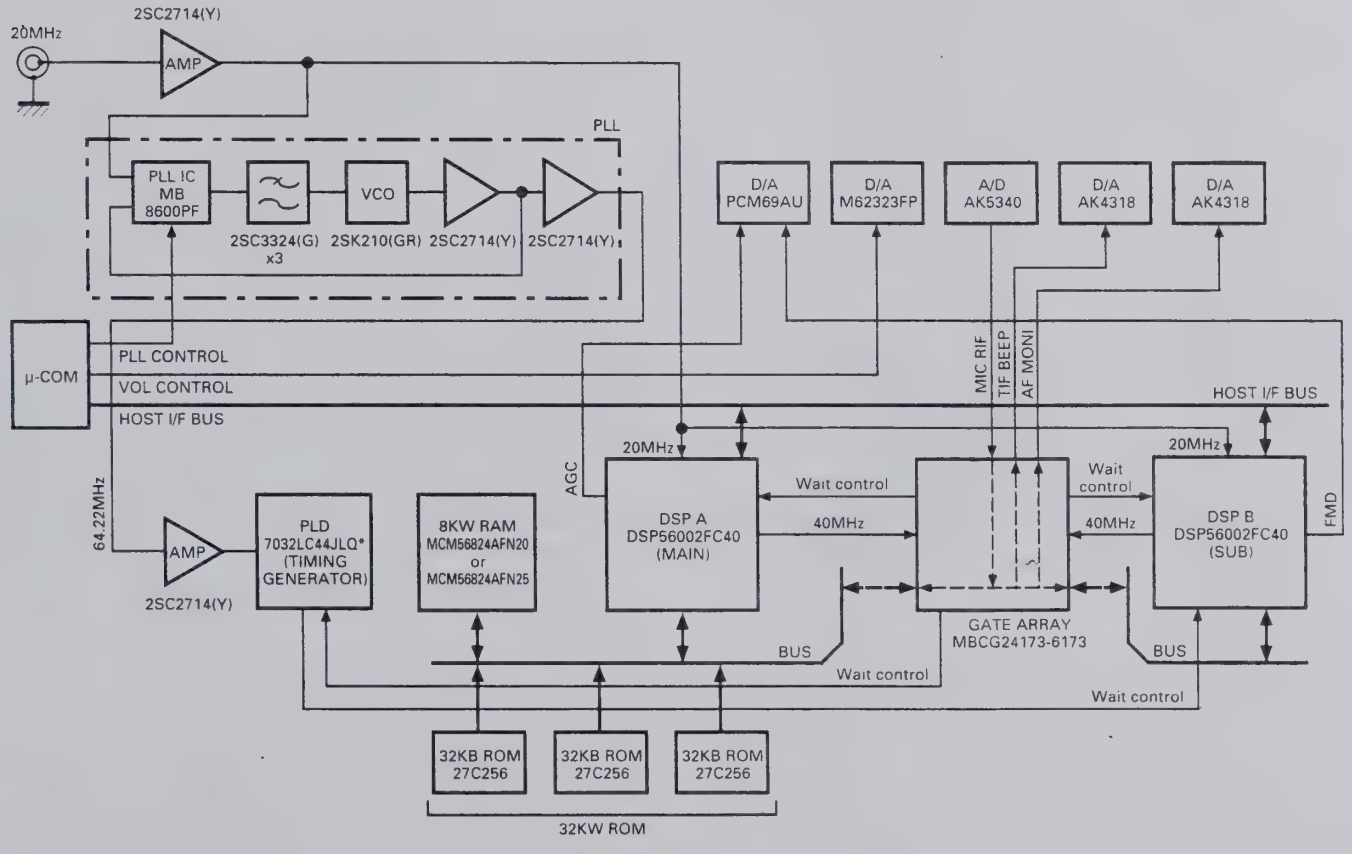

Fig. 17 Digital section block diagram

CIRCUIT DESCRIPTION

Figure 18 is a block diagram of the PLD (Programmable Logic Device). The clock with a sampling frequency fs (45.234375kHz) is generated from the 46.32MHz clock produced by the PLL in the TX-RX unit by the clock divider in the PLD. This clock is used for data transmission and reception between the analog-to-digital and digital to analog converters and gate array and data transmission and reception between the gate array, DSP, and the analog to digital and digital to analog converters. The PLD forms part of the bus control circuit for sharing the RAM and ROM with two DSPs and the circuit that accesses the ROM.

The gate array is used as the interface between the analog to digital and digital to analog converters and the DSP. Data is received from the analog to digital converter, or transmitted to the digital to analog converter, and each DSP is interrupted in the 1/fs sampling intervals. The gate array interfaces two DSPs for communication, and the two other DSPs control the bus for sharing the RAM and ROM.

The DSP has a 24 bit fixed-decimal DSP. It operates with the 40MHz clock, but the external 20MHz clock is given to the DSP. The DSP operates the 40MHz clock generated in the PLL in the IC. The clock is programmed to be output to pin 123 (CKOUT) of the DSP. Transfer of commands with the microprocessor is carried out through the host interface of the DSP.

The ROM and RAM are shared by two DSPs. When one of the DSPs is being accessed, the other DSP waits. It is carried out by the gate array and PLD. Three 8 bit ROMs are used to implement 24 bits.

The analog to digital converter (IC25 : AK5340-VS) is an 18 bit Δ-Σ type ADC for audio equipment. There are two channels, R and L. The R channel is used for the receive signal and the L channel is used for the microphone input signal. The digital to analog converter (IC16 and IC27 : AK4318-VS) is a 18 bit Δ-Σ type DAC for audio equipment. The digital to analog converter has two channels like the analog to digital converter : IC16 uses the R channel for the beep signal and the L channel for the transmit signal, and IC27 uses the R channel for the monitor signal and the L channel for the decode signal. Another digital to analog converter (IC34 : PCM69AU) is an 18 bit DAC for audio equipment, and uses the Rch for AGC and the L channel for audio signals in FM.

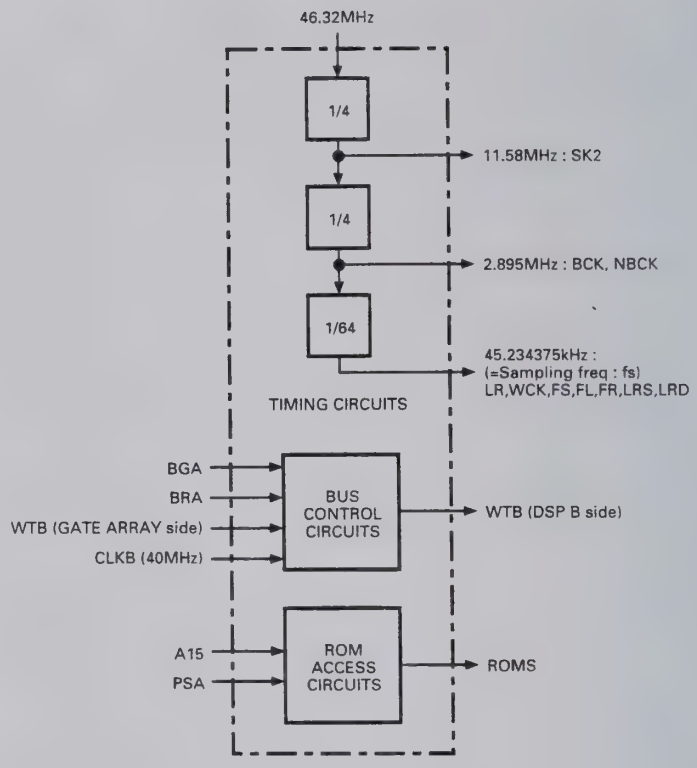

Fig. 18 PLD block diagram

■ Flow of transmit/receive signals

Flow of transmit/receive signals is explained below, together with the analog and digital sections. Flow of receive signals is explained first. See Figure 19.

The receive signal input from pin 3 (RIF) of CN1 is amplified by IC43 : NJM5532M. If a HIGH signal is input to RIF, its amplitude is limited to prevent any signal that exceeds the input range to the analog to digital converter (IC25 : AK5340-VS). The signal is passed through the band-pass filter and buffer amplifier, and its frequency is converted by the mixer (IC18 : MC74HC4053F). The frequency of the receive signal is about 1/4 of sampling frequency fs. The fs/4 frequency is the most stable frequency for digital signal processing. The receive signal of the fs/4 frequency is passed through the buffer amplifier, amplified by amplifier IC21 : NJM4560M, and converted to digital data by the analog to digital converter (IC25).

CIRCUIT DESCRIPTION

This data is read into the gate array (IC3 : MBCG 241873-6173) in sampling intervals 1/fs. The data read into the gate array is fed to the DSP in 1/fs for processing. DSP A (IC1 : DSP56002FC40) carries out auto notching, demodulation, noise processing, and squelch processing, and DSP B carries out AGC and filter processing.

AGC data, one of the DSP B operation results, is sent to the digital to analog converter (IC34 : PCM69AU) from pin 33 of DSP B (IC2: DSP56002 FC40) in 1/fs intervals. AGC data is converted to an analog current by IC34, and converted to an analog voltage by the I-V converter IC35 : AD822AR, and is output to the RF unit as the AGC voltage. The AGC voltage is reversed by the reversing amplifier IC35 : AD822AR, and the S-meter voltage used for packet communication is generated and output from the SMET terminal of ACC2 (J5).

The digital data demodulated by two DSPs is sent to the gate array in 1/fs intervals. The data is sent to the digital to analog converter (IC27 : AK4318-VS) from pin 68 of the gate array in 1/fs intervals and converted to an analog signal. The demodulate signal converted to an analog signal is passed through the third low-pass filter IC28 : NJM2100M. This low-pass filter eliminates the alias components. The demodulate signal then enters the VCA (IC29 : M51131L). The VCA attenuates and outputs the demodulate signal according to the voltage given to pin 8 of IC29. The voltage at pin 8 is the voltage corresponding to the rotational angle of the AF VOL, and is controlled by the microprocessor in the control unit. The demodulate signal is passed through the VCA, amplified by the AF amplifier (IC33 : LA4422), and output to the speaker and headphone.

Demodulation data used for packet communication is passed through low-pass filter IC28 : NJM2100M, then attenuated by the VCA IC31 : M51131L. The attenuation amount is determined by the value set on the menu. The signal is passed through the VCA and ACC2 (J5) through the buffer amplifier Q17 : 2SC 2412K(S), and output to the TNC.

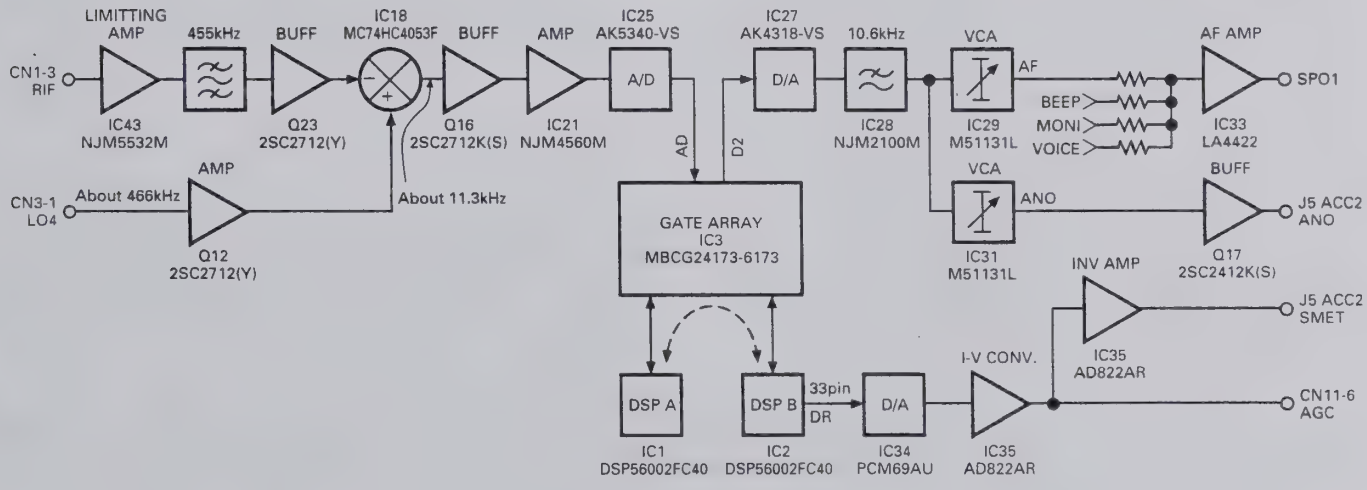

Fig. 19 Flow of receive signal

CIRCUIT DESCRIPTION

Then, flow of transmit signals is explained below. See Figure 20. If the mode is SSB, FM, or AM, the signal from the microphone is input. The signal enters the TX-RX unit through CN4. The signal is amplified by amplifier IC22 : AD822AR, and goes to the multiplexer (IC23 : MC74HC4052F). The multiplexer is used to switch between the microphone signal, the play signal from the DRU-3 (option), and packet signal. The signal passing through the multiplexer is amplified by amplifier IC24 : NJM2100M, and converted to digital data by the analog to digital converter (IC25 : AK5340-VS). The data is read into the two DSPs in the same way as for the receive signal. In transmit mode, DSP A carries out modulation, speech processing, and carrier signal generation in CW, FSK, and FM modes, while DSP B carries out VOX processing, voice equalizing processing, preemphasis processing (in FM mode), and microphone amplifier AGC processing.

The DSP does not perform modulation in FM mode. The DSP sends a 455kHz carrier signal from pin 1 (TIF) of CN1, adds subtone to the carrier signal, preemphasizes sounds, and limits the amplitude. Preemphasized audio data is sent from pin 33 of DSP A (IC1 : DSP56002FC40) to the digital-to-analog converter (IC34 : PCM69AU) in 1/fs intervals, and converted to an analog current. The analog current is converted to the audio signal of the analog voltage by the I-V converter IC36 : NJM4560M. IC36 also serves as the third low-pass filter that eliminates the alias components of the audio signal. The analog audio data signal is output from pin 3 (FMD) of CN3 to the PLL section.

The data modulated by the two DSPs (including FM carrier data) is sent to the gate array in the process as the demodulated signal. The signal is sent from pin 60 of the gate array to the digital to analog converter (IC16 : AK4318-VS) in 1/fs intervals, and converted to an analog signal. The frequency of this signal is fs/4. The analog modulated signal is passed through the third low-pass filter IC17 : NJM2100M to eliminate alias components. The signal is converted to the 455kHz IF signal by the mixer (IC18 : MC74HC4053F) and two ceramic filters (CF2 and CF3), and output from pin 1 (TIF) of CN1.

Monitor data, one of the DSP operation results, is sent to the gate array in the same process as the demodulate signal. Like the demodulate signal, the signal is sent from pin 68 of the gate array to the digital to analog converter (IC27 : AK4318-VS), and converted to an analog signal. The analog sidetone signal is passed through the third low-pass filter IC30 : NJM2100M and attenuated by VCA (IC31 : M51131L). The attenuation is determined by the rotational angle of MONI VOL. The flow of the signal after passing through the VCA is the same as for the demodulate signal.

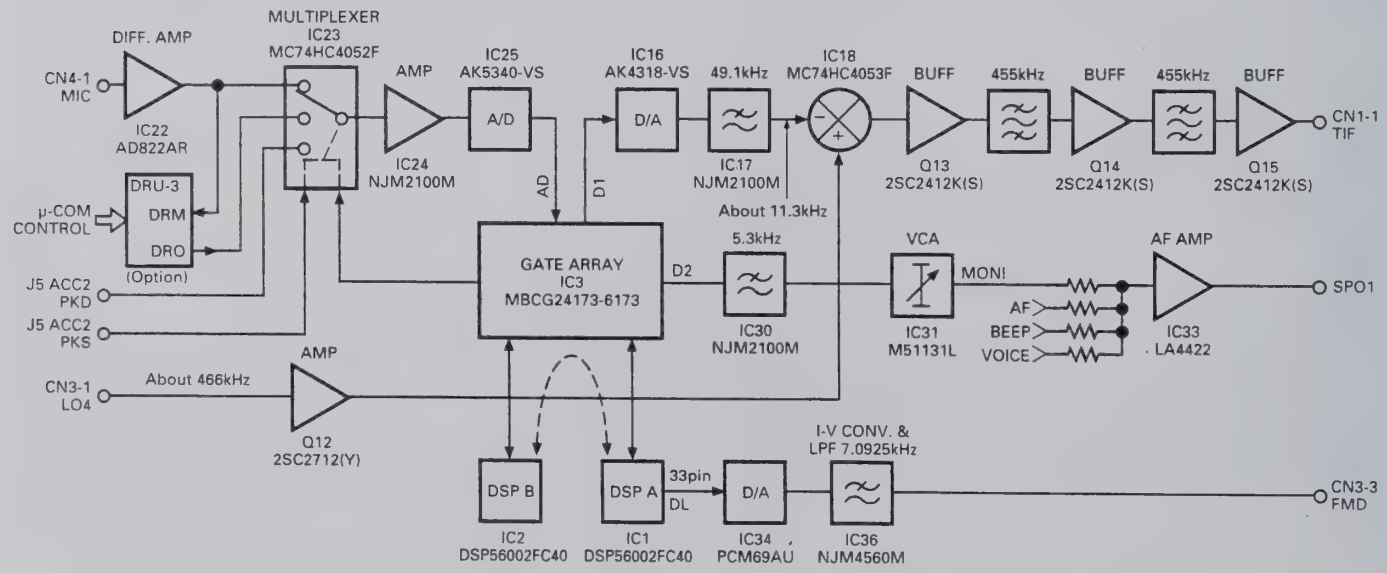

Fig. 20 Flow of transmit signal

CIRCUIT DESCRIPTION

■ Sidetone signal flow

When the electronic keyer is pressed, the sidetone is output. The sidetone is processed by DSP A. Sidetone data, a DSP A operation result, is output to the speaker or headphone in the same process as the monitor data. See Figure 21.

■ FSK tone signal flow

The flow of the FSK tone signal is the same as that of the sidetone. See Figure 21.

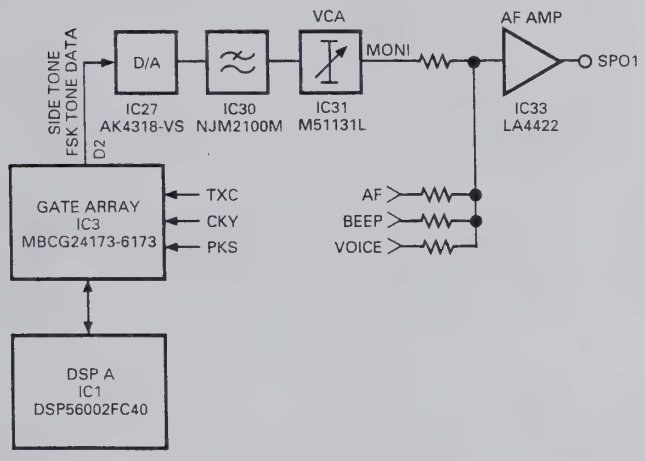

Fig. 21 Sidetone and FSK tone signal flow

■ Beep signal flow

When pin 6 (BEEP) of CN7 goes HIGH, DSP A sends beep data to the gate array in the same process as the demodulate signal. Like modulation data, the signal is sent from pin 60 of the gate array to the digital to analog converter (IC16 : AK4318-VS) in 1/fs intervals, and converted to an analog signal. The analog beep signal is passed through the primary low-pass filter IC19 : NJM4560M, and attenuated by VCA (IC29 : M51131L). The attenuation is determined by the value set on the menu. The flow of the signal after passing through the VCA is the same as for the demodulate signal.

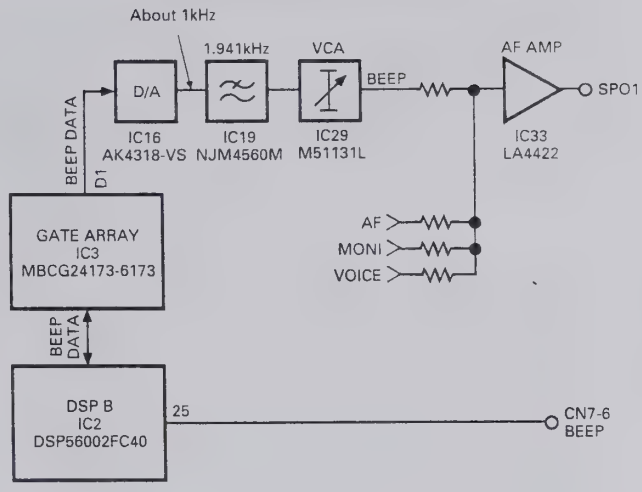

Fig. 22 Beep signal flow

■ DRU-3 recording and playback

The DRU-3 is controlled by the microprocessor in the control unit. During the DRU-3 recording, the MIC signal amplified by the differential amplifier (IC22 : AD822AR) is input to the DRU-3, and recorded. During DRU-3 playback, the playback signal is input to the analog-to-digital converter by switching the multiplexer (IC23 : MC74HC4052F). When the DSP receives a command "VOX ON and DRU playback" from the microcomputer, pin 38 of DSP B (IC2 : DSP56002FC40) goes HIGH and the SS line goes LOW. When the SS line goes LOW, the microprocessor sets the transceiver to transmit mode. This operation does not occur at the playback sound level of the DRU-3. Even if no sound is recorded, the transceiver enters the transmit mode when a DRU playback command arrives while VOX is ON. See Figure 20.

■ VS-2 audio signal flow

The audio signal output from the VS-2 is not processed by the DSP. The signal is amplified by the AF amplifier, and output to the speaker or headphone. The VS-2 is controlled by the microprocessor. See Figure 23.

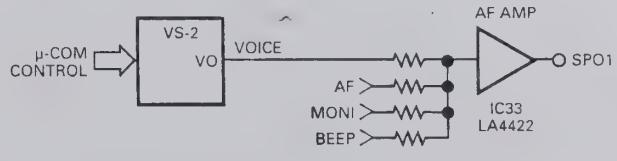

Fig. 23 VS-2 audio signal flow

CIRCUIT DESCRIPTION

■ Commands and data transferred to or from the microprocessor

To understand the DSP processing, the commands sent from the microcomputer to the DSP, and data sent from the DSP to the microcomputer are described below.

For details of error status, see the error list (Table 10).

1) Microprocessor → DSP

- Transmit mode
- Transmit filter
- CW rise (fall) time
- FSK shift width
- Squelch level
- Applicable filter follow speed
- SPAC interrelation time
- Check mode operation setting
- VOX delay time
- AGC release time
- TX AGC release time
- AGC correction
- TX equalizing
- FM modulation
- Processor compression level (LOW)
- Processor compression level (MID)
- Processor compression level (HIGH)
- RX AF AGC gain (AM/FM)
- RX AF AGC gain release time (AM/FM)
- TX AGC gain (packet input)
- Receive mode
- Receive filter
- CW pitch frequency
- FM subtone frequency
- Noise/interference elimination mode setting
- Auto notch follow speed
- Operation flag 1
- VOX gain
- RF gain (AGC)
- TX AGC gain
- AM modulation
- Carrier level
- Operation flag 2

2) DSP → Microprocessor

- S-meter data
- Compression level data
- Squelch status
- Microphone level data
- Error status
- Check mode status

Error No.	Error description
00	TX-RX unit is not connected.
01	Main DSP stack error
02	Main DSP trace error
03	Main DSP software interrupt
04	Main DSP SSI reception
05	Main DSP SSI exceptional reception
06	Main DSP SCI reception
07	Main DSP SCI exceptional reception
08	Main DSP SCI transmission
09	Main DSP SCI line idle detection
0A	Main DSP NMI
0B	Main DSP invalid command detection
0C	Command cannot be transferred from the main DSP to the sub DSP.
10	RAM check error 1
11	RAM check error 2
12	Gate array check error
21	Sub DSP stack error
22	Sub DSP trace error
23	Sub DSP software interrupt
24	Sub DSP SSI reception
25	Sub DSP SSI exceptional reception
26	Sub DSP SCI reception
27	Sub DSP SCI exceptional reception
28	Sub DSP SCI transmission
29	Sub DSP SCI line idle detection
2A	Sub DSP NMI
2B	Reserved
2C	Reserved
2D	Sub DSP invalid command detection
2E	Reserved
F0	Main DSP timeover error
F1	Sub DSP timeover error
FD	PLL unlock (TX-RX unit)
FE	PLL unlock (RF unit PLL section)
FF	Temperature protection error

Table 10 Error list

CIRCUIT DESCRIPTION

■ New function circuit

The TS-870S noise processing, auto notch, line enhancer, SPAC, and beat cancel functions are characteristics of the DSP digital signal processing. These functions and other features are described below.

1) Auto notch

The auto notch corresponds to the IF filter used in the previous models. It is an adaptive filter, and emphasizes weak signals by tracking interfering signals automatically in the AGC loop (the reception gain increases). The notch filter has very good damping and frequency characteristics in the receiving bandwidth.

2) Beat cancel

The "beat cancel" corresponds to the AF filter used in the previous models. It also is an adaptive filter, and finds and removes beat components from the received signal. Unlike the notch filter, this filter removes multiple beats, but it does not emphasize weak signals even if the beat is canceled.

3) Noise reduction

The TS-870S uses a line enhancer or SPAC to reduce noise. One of these two functions should be assigned to the N.R. key on the front panel.

The line enhancer is an adaptive filter which does not attenuate the target signal, but attenuates only noise. If the conditions are not very bad, the S/N ratio can be improved greatly.

Select SPAC to improve the S/N ratio effectively. SPAC stands for "Speech Processing System by use of Auto Correlation function." It takes the periodical signal (target reception signal) and suppresses noise using the Auto Correlation function. Since SPAC takes reception signals with a certain time width, the signals become discontinuous and cause noise.

Since the auto notch, beat cancel, and line enhancer are adaptive filters, their characteristics change according to the input signal. If the automatic tracking is set to OFF on the menu when the filter effect is good under good signal conditions, the effect does not change even if the conditions turn bad.

4) VOX

DSP processes the correlation between the received signal and signal from the microphone, and carries out the conventional anti-VOX processing. Therefore, TS-870S does not have anti-VOX.

5) SSB modulation/demodulation

TS-870S uses the PSN modulation/demodulation used for TS-950 and subsequent models. With the increase in the DSP operation precision, the side-band suppression has been improved in a very wide bandwidth from 25Hz to 6kHz (80dB or more for modulation and 90dB for demodulation). The PSN method does not eliminate all group-delay distortion because the Hilbert converter uses an IIR filter. The TS-870S uses a linear phase shifter with a Hilbert converter containing an FIR filter. As the FIR filter can keep group delay constant, it does not cause group-delay distortion. However, as the group-delay itself increases, if the linear phase shifter is set to ON via the menu, a signal is transmitted several ms after a voice enters the microphone.

■ Analog section and other circuits

The analog section and other circuits were described in the flow of transmission and reception signals. This section describes the circuits that were not explained in the flow of transmission and reception signals.

1) Reference voltage circuit

Since TS-870S does not have a negative power supply, a 2.5V reference voltage, which is half the power supply voltage, is supplied to the OP amplifier to process analog signals linearly. Fig. 24 shows this circuit. 2.5V are produced by dividing the power supply voltage by R129 and R132. This voltage is provided to the circuitry through buffer amplifier IC19 or IC20.

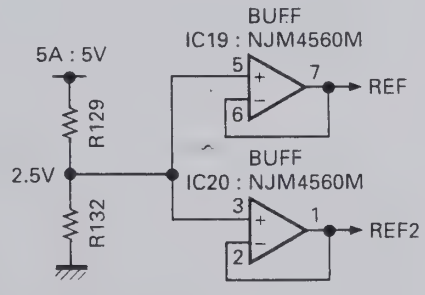

Fig. 24 Reference voltage circuit

CIRCUIT DESCRIPTION

2) Pop mute circuit

The mute circuit shown in Fig. 25 reduces the pop sound when the power is switched ON and OFF. If CN7 pin 16 AMUT is LOW, the mute circuit consisting of IC44 : TC7S04F and Q22 : DTC124EK mutes the AF amplifier (IC33 : LA4422) and suppresses the pop sound when the power is turned ON. A microprocessor controls AMUT and cancels muting at an appropriate time.

When the power is turned OFF, muting is also controlled by AMUT, but is done only if the power switch ON TS-870S is pressed. The circuit comprising Q25 : DTA143EK, Q26 : DTC124XK, and Q27 : DTC143EK suppresses the pop sound when the external power supply switch is turned OFF. When this switch is turned OFF, the voltage of the AF amplifier power supply 14A decreases. When the 14A voltage falls, Q25 becomes active (ON), and then Q26 becomes active (the collector goes LOW to mute the AF amplifier and suppress the pop sound. Q27 prevents muting when the voltage of the AF amplifier power supply 14A falls during transmission.

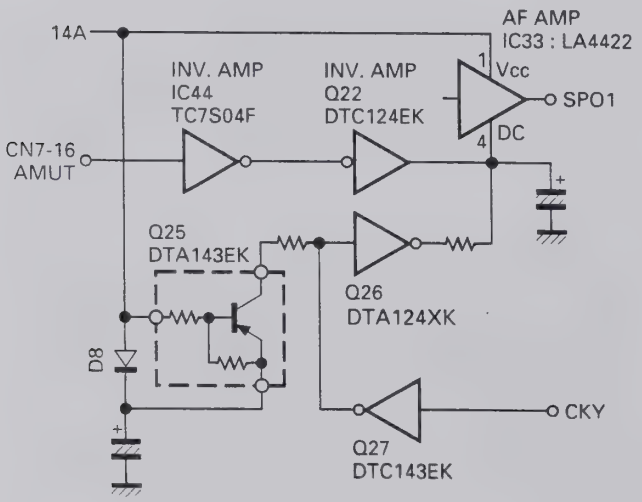

The TS-870S uses AF amplifier IC33: LA4422 pin 4 (DC) as the mute pin.

Fig. 25 Pop mute circuit

■ Transmit/receive frequency characteristics correction circuit

The transmission sound quality has a flat frequency characteristic due to DSP modulation. However, the low-frequency range is also flat to the cut-off frequency, so the model has less clarity compared to the conventional transceivers. A correction circuit is provided to suppress the low-frequency range. It consists of R141, R155, and C145 in the TX-RX unit, and it is –2dB at 300Hz for 1kHz.

To return to the flat frequency characteristic, remove C145 and replace R155 with a 1.8kΩ resistor. (See Figure 26.)

The receive frequency is also flat, as well as the hi-fi sound quality when the filter is widened. When the receive frequency is flat, the volume of the low-frequency range becomes insufficient, so a correction circuit that slightly emphasizes the low-frequency range is provided. It consists of R204, R205, R208, and C208 in the TX-RX unit, and it is +2dB at 1kHz for 3kHz.

To return to the flat frequency characteristic, remove R205. (See Figure 26.)

Transmit side

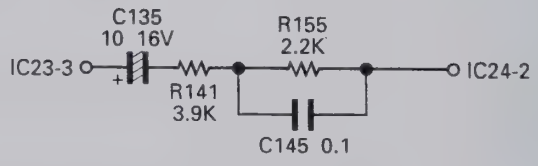

Receive side

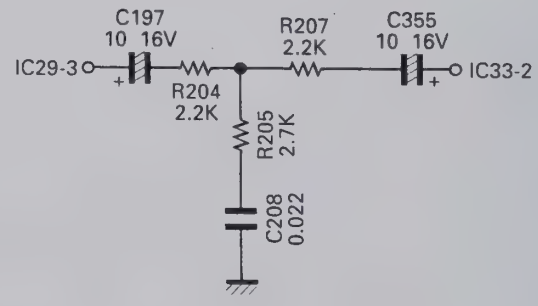

Fig. 26 Transmit/receive frequency characteristics correction circuit

DESCRIPTION OF COMPONENTS

RF UNIT (X44-3210-00) (A/9) : RF

Ref. No.	Use/Function	Operation/Condition
Q1	Switching	On when exit RX on.
Q2	Switching	On when TX.
Q3	Switching	Off when ATT1 or ATT2 on.
Q5	TX RF amplifier	Drive output (TX frequency)
Q6	Switching	DATT on
Q7	Switching	1/2 : 30kHz~490kHz 2/2 : 490kHz~1.62MHz
Q8	Switching	1/2 : 1.62MHz~2.49MHz 2/2 : 2.49MHz~3.99MHz
Q9	Switching	1/2 : 3.99MHz~6.99MHz 2/2 : 7.30MHz~10.49MHz
Q10	Switching	1/2 : 6.99MHz~7.30MHz 2/2 : 13.99MHz~14.49MHz
Q11	Switching	1/2 : 20.99MHz~21.49MHz 2/2 : 21.49MHz~30.00MHz
Q12	Switching	1/2 : 14.49MHz~20.99MHz 2/2 : 10.49MHz~13.99MHz
Q13	RF amplifier	21.49MHz~30.00MHz
Q14, 15	RF amplifier	30kHz~21.49MHz
Q16	Amplifier	LO1 : 73.08MHz~103.05MHz
Q17~20	Mixer	$f_{LO1} - f_{RF}$ = 73.05MHz
Q21	Ripple filter	14S
Q22	Amplifier	73.05MHz
Q23	Mixer	73.05MHz – 64.22MHz = 8.83MHz
Q24	Amplifier/AGC	73.05MHz
Q26, 27	Mixer	73.05MHz – 64.22MHz = 8.83MHz
Q28	Amplifier	8.83MHz
Q29~31	Amplifier/AGC	8.83MHz
Q32	AGC	NB (Noise blanker)
Q33	Amplifier/AGC	8.83MHz
Q35, 36	Mixer	73.05MHz → TX f
Q37, 38	Mixer	8.83MHz → 73.05MHz
Q39	Amplifier	TX IF
Q42	Switching	RF blanking
Q43, 44	DC amplifier	ALC
Q45, 46	Switching	On when AM mode.
Q47	DC amplifier	ALC
Q48	Switching	On when AM transmission mode.
Q49	Switching	
Q50	DC amplifier	ALC amplifier
Q51	Switching	Pulse generate when AM transmission mode.
Q52	DC amplifier	ALC amplifier
Q54	Switching	Off when NB.
Q55	Switching	Make relay for linear.
Q56	Switching	On when TX.
Q57, 59	Switching	TXB generate
Q58, 60	Switching	RXB generate
Q61	Switching	On when AIP off (0~21.49MHz).
Q62	Switching	On when AIP off (21.49~30MHz).
Q63	Switching	On when AIP off.
Q64	Switching	On when AIP on.
Q65	Switching	12V when RX.
Q66	Switching	On when RX.
Q70, 71	Switching	CKY
IC1	Serial/Parallel conversion	BPF selection
IC2	Serial/Parallel conversion	
IC6	OP amplifier	ALC meter
IC7	DAC	8 ch
IC8	Meter amplifier	VSF, VSR, ALC and Processor.

DESCRIPTION OF COMPONENTS

Ref. No.	Use/Function	Operation/Condition
IC9	Comparator	NB pulse
IC10	AVR	8V → 5V
D1~3	Relay surge absorption	
D4~7	Large input protection	
D8	RF switch	On when RX.
D10	RF switch	On when TX.
D11~33, 35	RF switch	BPF switch
D36, 37	RF switch	On when AIP on.
D38, 39	RF switch	ON when 21.49MHz or more RF amplifier selection.
D40, 41	RF switch	On when 21.50MHz or less RF amplifier selection.
D42	RF switch	
D43	RF switch	LO2 (64.22MHz) switch
D46	RF switch	Noise detection
D47	RF switch	TGC voltage control
D49	RF switch	Gain control
D50	Zener diode	–6.2V stability
D51	LED	Voltage generate
D52	Zener diode	12V (ALC voltage for linear)
D53	Switch	Pulse generate
D54	Reverse current prevention	
D55	Zener diode	3V (Voltage shift)
D56	Switch	ALC
D57	LED	CKY
D58	Relay surge absorption	
D59	Reverse current prevention	RBK
D60	RF switch	On when 29MHz.
D61	RF switch	On when AIP on.
D62	RF switch	On when RX.
D63, 64	RF switch	8.83MHz filter changeover (15kHz).
D65, 66	RF switch	8.83MHz filter changeover (3kHz).
D67	RF switch	8.83MHz filter changeover (6kHz).
D68	RF switch	On when TX.
D69	RF switch	8.83MHz filter changeover (6kHz).
D70	Zener diode	6.2V (Voltage shift)
D71	Zener diode	4.7V (Voltage stability)
D72	Switch	CKY

RF UNIT (X44-3210-00) (B/9) : PLL

Ref. No.	Use/Function	Operation/Condition
Q500	Buffer	D/A buffer
Q501	Amplifier	20MHz (fSTD)
Q502	Mixer IC506 input buffer	5.46~4.46MHz
Q503	Buffer	D/A buffer
Q504, 505	Switching	Chopper
Q506	Buffer	Output for chopper
Q507	Amplifier	LO3 (8.375MHz)
Q508	Buffer	For LO3 output
Q510	Buffer	D/A buffer
Q511	Buffer	For LO4 output
Q512	Amplifier	REF 20MHz
Q513	Tripled circuit	fSDT x 3 = 60MHz
Q514, 515	Buffer	Reference oscillator 20MHz
Q516	VCO A changeover	
Q517	VCO B changeover	

DESCRIPTION OF COMPONENTS

Ref. No.	Use/Function	Operation/Condition
Q518	VCO C changeover	
Q519	VCO D changeover	
Q520	VCO A	73.08~80.54MHz
Q521	VCO B	80.54~87.54MHz
Q522	VCO C	87.54~94.54MHz
Q523	VCO D	94.54~103.05MHz
Q524	Buffer	VCO A~VCO D output (73.08~103.05MHz)
Q525	Mixer IC508 input buffer	73.08~103.05MHz
Q526	Buffer	For LO1 output
Q527	Active LPF	Comparison 1MHz
Q528, 529	Active LPF	
Q530	Amplifier	PLL IC IC507 input (18~48MHz)
Q531	Amplifier	18~48MHz
Q532	Amplifier	LO2A output (64.22MHz)
Q533	Switching	PLL unlock signal output ("H" : Unlock)
Q534~536	Active LPF	Comparison 20kHz (5kHz in FM mode)
Q537	Switching	FM modulation input on/off
Q539	Buffer	For LO2A outrput
Q800	Reference oscillator	Reference frequency 20MHz oscillation.
IC500	DDS	1.46~0.46MHz for LO1
IC501	DDS	1.625MHz for LO3
IC502	DDS	For LO4
IC503	Divider	20MHz x (1/5) = 4MHz
IC505	Mixer	1.46~0.46MHz → 5.46~4.46MHz
IC506	Mixer	5.46~4.46MHz → 54.54~55.54MHz
IC507	PLL	2~5 : Frequency division ratio input 6 : 18~48MHz input 9 : Lock voltage output 11 : Unlock output (Unlock : "L") 15 : 20MHz input
IC508	Mixer	73.05~103.05 + 54.54~55.54 = 18~48MHz
IC509	PLL	2~5 : Frequency division ratio input 6 : 64.22MHz input 9 : Lock voltage output 11 : Unlock output (Unlock : "L") 15 : 20MHz input
IC510	AVR	13.8V → +9V
IC511	AVR	13.8V → +9V low drop-out
D500	Vari-cap diode	VCO A
D501	Switching	VCO A output
D502	Vari-cap diode	VCO B
D503	Switching	VCO B output
D504	Vari-cap diode	VCO C
D505	Switching	VCO C output
D506	Vari-cap diode	VCO D
D507	Switching	VCO D output
D508	Reverse current prevention	Unlock signal detection

FINAL UNIT (X45-351X-XX) (A/5) : FINAL 0-00 : K,P,M,M2,X 2-71 : E,E2,E3,E9

Ref. No.	Use/Function	Operation/Condition
Q501	Pre-drive amplifier	Wide-band amplification of HF band
Q502, 503	Drive amplifier	Push-pull wide-band amplification of HF band
Q504	Drive bias supply	Temperature compensation of drive
Q505, 506	Final amplifier	Push-pull wide-band amplification of HF band
Q507	Final bias supply	Temperature compensation of final
D501	Temperature compensation	Temperature sensing of pre-drive
D502	Temperature compensation	Temperature sensing of drive
D503	Temperature compensation	Temperature sensing of final
D504	Reverse power connection protection	

DESCRIPTION OF COMPONENTS

FINAL UNIT (X45-351X-XX) (B/5) : FILTER

Ref. No.	Use/Function	Operation/Condition
Q1~5	Relay driver	
Q6	Switch	Antenna tuner through tune
Q10~16	Relay driver	
IC1	Band data decoder	
D1	High-frequency rectification	Reflected wave rectification
D2	High-frequency rectification	Forward wave rectification
D3	Voltage stabilization	5.1V
D4	Relay surge absorption	1.6~2.0MHz LPF relay
D5	Relay surge absorption	2.0~4.0MHz LPF relay
D6	Relay surge absorption	4.0~7.5MHz LPF relay
D7	Relay surge absorption	7.5~10.5MHz LPF relay
D8	Relay surge absorption	10.5~14.5MHz LPF relay
D9	Relay surge absorption	14.5~21.5MHz LPF relay
D10	Relay surge absorption	21.5~30.0MHz LPF relay
D11	Switching	

FINAL UNIT (X45-351X-XX) (C/5) : CONNECTION

Ref. No.	Use/Function	Operation/Condition
Q401~403	DC/DC	–6V
Q404	Ripple filter	14S → 14V
Q405	Ripple filter, AVR	
Q460, 461	Mixer	RX
Q470, 471	Mixer	TX
Q472, 475	Amplifier	TX IF
IC402	5V AVR	8V → 5V (For PLL)
D401	Rectification	
D402	Current stabilization	9V
D450	Reverse current prevention	
D451~456	RF switch	BPF switch
D457	Reverse current prevention	

FINAL UNIT (X45-351X-XX) (D/5) : AVR

Ref. No.	Use/Function	Operation/Condition
Q601	Switch	14S supply when power switch on.
Q701	Switch	On when fan operation
Q702, 703	Switch	Fan motor drive
IC601	8V AVR	13.8V → 8V (Analog 8V : 8A)
IC602	8V AVR	13.8V → 8V (Digital 8V : 8D)
IC701	Comparator	Fan control
D601	Relay surge absorption	
D701	Reverse current prevention	
D702	Surge absorption	

FINAL UNIT (X45-351X-XX) (E/5) : RELAY

Ref. No.	Use/Function	Operation/Condition
D301	Lightning surge protection	ANT1
D302	Lightning surge protection	ANT2
D303	Relay surge absorption	Antenna changeover relay
D304	Relay surge absorption	TX/RX changeover relay

DESCRIPTION OF COMPONENTS

AT UNIT (X53-3340-02)

Ref. No.	Use/Function	Operation/Condition
Q1, 2	Amplifier	Waveform shaping
Q3	Switching	On when APRE is "H".
Q4, 5	Switching	Motor speed control pulse
IC1	DFF	Phase difference detection
IC2	Analog switch	For control changeover motor 1
IC3	Analog switch	For control changeover motor 2
IC4	Motor drive	For motor 1
IC5	Motor drive	For motor 2
IC6	Comparator	Amplification difference detection
IC7	AVR	+5V
D1	Detector	Current component amplification detection
D2	Detector	Voltage component amplification detection
D3~8	Switching	Clipper
D10	Switching	Spike absorption
D101~103	Switching	Spike absorption
D105~108	Switching	Spike absorption
D109, 110	Switching	Band data

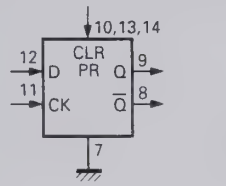

Function table

INPUTS		OUTPUTS	
CLOCK	D	Q	Q
↑	L	L	H
L	X	Qo	$\overline{Qo}$

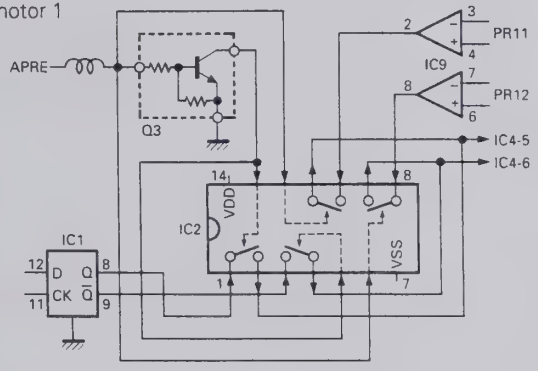

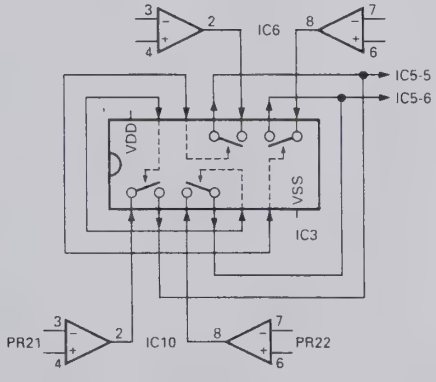

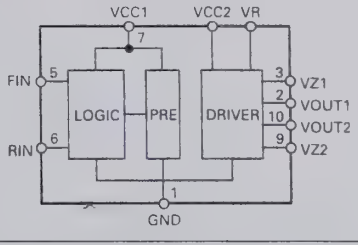

DESCRIPTION OF COMPONENTS

CONTROL UNIT (X53-356X-XX) (A/4) : CONTROL

0-11 : K,P 0-21 : M 0-22 : M2 0-71 : X 2-71 : E 2-72 : E2 2-73 : E3 2-74 : E9

Ref. No.	Use/Function	Operation/Condition
Q1, 2	Switching	Voltage drop changeover
Q3, 4	Switching	Multiplexer changeover
Q5	Switching	EEPROM write control changeover
Q6~11	Switching	AT control (PR11, PR12, PR21, PR22, APRE, SPED)
Q12, 13	Switching	AT-300 control and input (TS, TT)
Q14, 15	Switching	AT-300 control and output (TS, TT)
Q16	Switching	IC24 control (Reset)
Q17~19, 22	Switching	IC24 control (CH1, 2, 3, 4)
Q20, 24	Switching	IC24 control (DOT)
Q21, 23	Switching	IC24 control (DASH)
Q27	Switching	VBSY signal
Q28	Switching	KEY signal
Q29	Switching	Filter changeover (6kHz)
Q30	Switching	Filter changeover (3kHz)
Q31	Switching	Filter changeover (15kHz)
Q33	Switching	BLNK signal
IC1, 2	Regulator	5V output
IC3	Regulator	8V output
IC4	EEPROM	Adjustment data saving
IC5	Reset, Power supply changeover	System reset and Back-up power supply changeover
IC6	CPU	8 bit microcomputer (Main)
IC7, 10	Inverter	Reverse data
IC8	RAM	8K-byte
IC9, 13	Multiplexer	A/D data changeover
IC11	OR gate	RD/WR signal output
IC12	ROM	64K-byte
IC14	AND gate	Chip select combination for RAM and ROM
IC15	Bidirectional buffer	Data bus input/output changeover
IC16, 22, 23	Extended I/O	8 bit x 4, 4 bit x 1
IC17, 18	Decoder	Converts the address signal into a chip select signal for each IC.
IC19	Latch	Chip select signal latch
IC20, 21	Encoder gate array	Encoder pulse count
IC24	CPU	8 bit microcomputer (Electronic keyer)
IC25, 26	Schmitt trigger	Encoder chattering absorption
IC27	Level shift	RS-232 level shift
IC28	OP amplifier	Buffer
IC29	OR gate	CKY signal and BPC signal combination
D1~3	Protection diode	Power supply
D4	Voltage detector	Voltage drop detection (About 10V)
D5	Protection diode	Reverse current prevention
D6	Protection diode	KEYS line
D7	Protection diode	DASH line
D8	Protection diode	DOT line
D9	Protection diode	MD line
D10	Protection diode	MU line
D11	Protection diode	KEY line
D12	Protection diode	SS line

DESCRIPTION OF COMPONENTS

CONTROL UNIT (X53-356X-XX) (B/4) : SW

Ref. No.	Use/Function	Operation/Condition
Q501, 502	LED switch	
IC501~504	Serial/Parallel	Data conversion for tact switch and LED
D501, 502	LED	
D510~519	LED	

TX-RX UNIT (X57-4620-00)

Ref. No.	Use/Function	Operation/Condition
Q1	Switch	Change SS line to low when VOX active.
Q2	Amplifier	64.22MHz
Q3	Amplifier	REF 20MHz
Q4	Switch	On/Off when squelch open/close (For packet).
Q5, 7	Active LPF	
Q6	Active LPF	PLL loop filter
Q8	VCO	46.32MHz oscillation circuit
Q9, 10	VCO	Output buffer
Q12	Amplifier	LO4 466kHz
Q13, 15	Buffer	TX IF 455kHz
Q14	Amplifier	TX IF 455kHz
Q16	Buffer	Receive signal for DSP processing (11.3kHz)
Q17	Buffer	ACC2 audio output
Q22	Switch	Mute signal (Power on/off)
Q23	Buffer	RX IF 455kHz
Q25	Pulse generator	AF mute
Q26	Switch	Mute signal
Q27	Switch	Mute signal absorption (Mute inhibit when TX)
IC1	DSP A	Main DSP
IC2	DSP B	Sub DSP
IC3	Gate array	For interface
IC4	DSP ROM	Low (D0~D7) 32KB
IC5	DSP ROM	Mid (D8~D15) 32KB
IC6	DSP ROM	High (D16~D23) 32KB
IC7	DSP RAM	8K ward
IC9	PLD	Timing generator
IC15	PLL IC	46.32MHz clock generation
IC16	DAC	Rch : BEEP signal (About 1kHz) Lch : Transmission signal (11.3kHz)
IC17	Active filter	TX (fc = 49.1kHz) 3rd LPF
IC18	Mixer	RX : 455kHz → 11.3kHz TX : 11.3kHz → 455kHz
IC19	Voltage follower, Active LPF	Reference voltage buffer, BEEP LPF (fc = 1.9kHz)
IC20	Voltage follower	Reference voltage buffer
IC21	LPF, Buffer	RX IF 11.3kHz
IC22	Amplifier	Microphone amplifier, unbalanced/balanced modulation
IC23	Multiplexer	MIC, DATA, DRU-3 changeover
IC24	LPF, Buffer	TX microphone amplifier, unbalanced/balanced modulation
IC25	ADC	Rch : Reception signal Lch : Microphone input signal
IC26	DAC	VCA control
IC27	DAC	Rch : Monitor signal Lch : De-modulation signal
IC28	Active LPF	De-modulation signal (fc = 10.6kHz)
IC29	VCA (Electronic volume)	De-modulation signal, BEEP
IC30	Active LPF	Monitor signal (fc = 5.3kHz)
IC31	VCA (Electronic volume)	Packet AF, monitor
IC33	AF amplifier	Audio amplifier

DESCRIPTION OF COMPONENTS

Ref. No.	Use/Function	Operation/Condition
IC34	DAC	Rch : AGC signal Lch : FM modulation signal
IC35	I-V converter, Inverter	AGC and S-meter voltage
IC36	I-V converter, Active LPF	FM modulation signal (fc = 7.2kHz)
IC37	AVR	13.8V → Analog 5V
IC38	AVR	Digital 8V → Digital 5V
IC39	AVR	13.8V → 5V for PLL
IC40	AVR	13.8V → 8V for PLL
IC41, 42	Buffer	VCA control
IC43	Clipper amplifier	RX IF 455kHz
IC44	Inverter	Mute (Power on/off)
D1~4	Reverse current prevention	
D5	VCO bari-cap diode for DSP	64.32MHz oscillation
D7, 8	Reverse current prevention	

SEMICONDUCTOR DATA

PLL : MB86001PF (RF Unit IC507, 509, TX-RX Unit IC15)

■ Terminal connection diagram

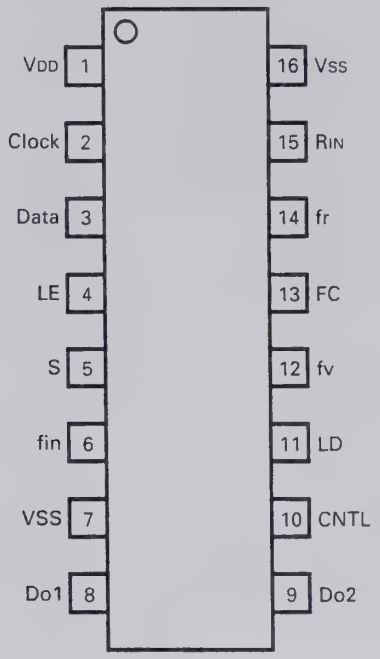

■ Terminal functions

Pin No.	Pin code	I/O	Function
1	VDD	–	Power supply pin.
2	Clock	I	Shift register clock input pin. Serial data is taken in at the rising edge of the clock signal. The input section contains a Schmitt trigger circuit.
3	Data	I	Serial data input pin for setting the divide ratio of each divider. The input section contains a Schmitt trigger circuit.
4	LE	I	Shift register load enable signal input pin. When LE is high, the divider ratio data is transferred to the latch specified by the control bit. This data is used as the divide ratio of each divider. The input section contains a Schmitt trigger circuit.
5	S	I	Switch pin for selecting the latch for setting the divide ratio of each divider. When the S pin is low, latch V1 is selected. When the S pin is high, latch V2 is selected. The divide ratio data is then sent to the divider
6	fin	I	Divider input pin. The input section contains a bias circuit and an amplifier. Connect the voltage control oscillator (such as a VCO) by AC-coupling.
7	Vss	–	Ground pin.
8	Do1	O	Phase comparator output pin (charge pump). The Do1 output level can be reversed by FC. The reference divider output fr and divider output fv are related as follows. On when CNTL is low. fr > fv : High level (FC : Low), Low level (FC : High), fr = fv : High impedance, fr < fv : Low level (FC : Low), High level (FC : High)
9	Do2	O	Phase comparator output pin (charge pump). The relationships between the reference divider output fr and divider output fv are the same as for Do1. On when CNTL is high.
10	CNTL	I	Pin that controls charge pump outputs Do1 and Do2. The relationships between CNTL, Do1 and Do2 are as follows. When CNTL is low, Do1 : Output, Do2 : High impedance. When CNTL is high, Do1 : High impedance, Do2 : Output.
11	LD	O	Phase comparator output pin. When PLL is locked, LD is high. When PLL is unlocked, LD is low
12	fv	O	Divider division output monitor pin. A signal is output from the pin in monitor mode. Normally, this pin has high impedance.
13	FC	I	Phase comparator input switch pin.
14	fr	O	Reference divider division output monitor pin. A signal is output from this pin in monitor mode. Normally, this pin has high impedance.
15	RIN	I	Reference divider input pin. The input section contains a bias circuit and an amplifier. Connect the reference oscillator (such as TCXO) by AC-coupling.
16	Vss	–	Ground pin.

SEMICONDUCTOR DATA

Bidirectional buffer : TC74VHC245F (COntrol Unit IC15)

■ **Terminal connection diagram**

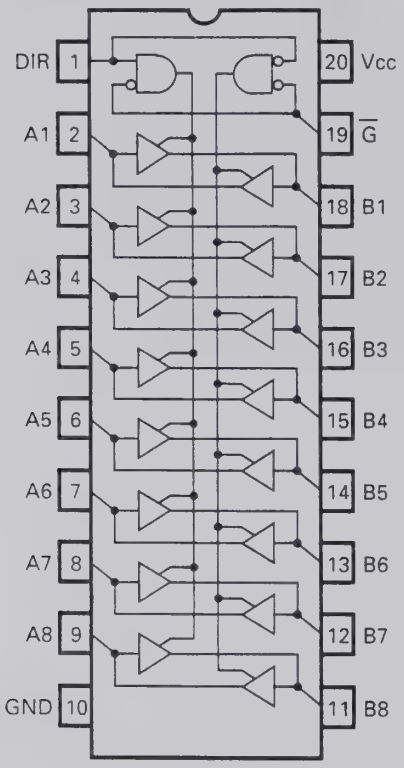

■ **Logic diagram**

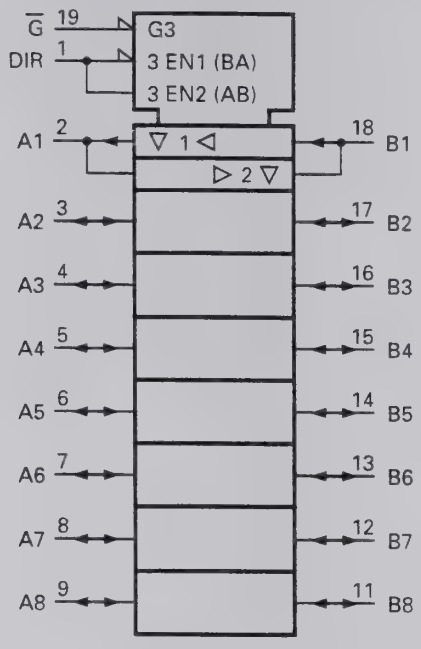

■ **Truth table**

Input		Function		Output
$\overline{G}$	DIR	A bus	B bus	state
L	L	Output	Input	A=B
L	H	Input	Output	B=A
H	X	High impedance		Z

X : Don't Care Z : High impedance

SEMICONDUCTOR DATA

DC/AC Converter : AK4318-VS (TX-RX Unit IC16, 27)

■ Terminal connection diagram

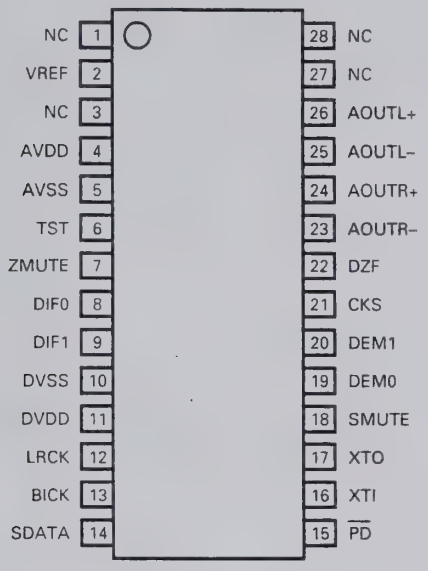

■ Block diagram

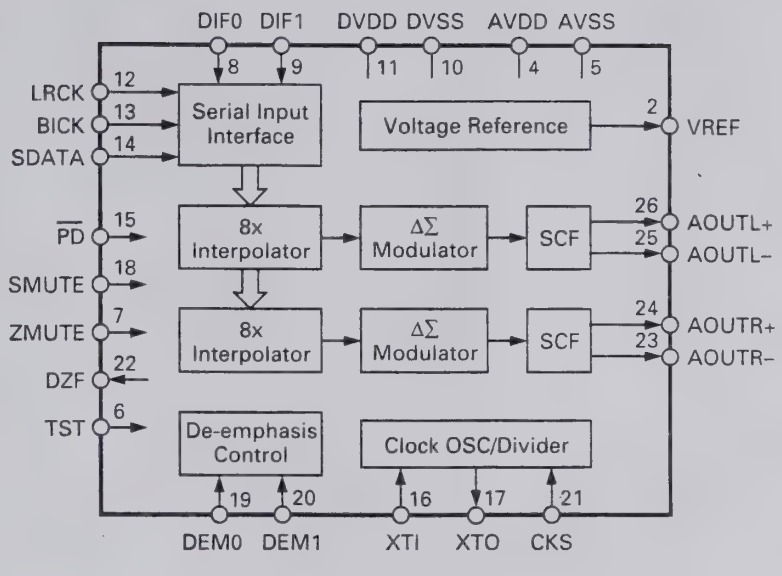

■ Terminal functions

Pin No.	Pin name	I/O	Function
1	NC	–	
2	VREF	O	Reference voltage output pin (AVDD) – 3.75V. The 10μF electrolytic capacitor and 0.1μF ceramic capacitor are connected between VREF and AVDD.
3	NC	–	
4	AVDD	–	Analog power supply pin (+5V).
5	AVSS	–	Analog ground pin.
6	TST	I	Test pin (pull down). Must be open or low.
7	ZMUTE	I	Zero mute pin (pull down). High : Detects zero and mutes output.
8, 9	DIF0, DIF1	I	Input format pin. Supports four modes.
10	DVSS	–	Digital ground pin.
11	DVDD	–	Digital power supply pin (+5V).
12	LRCK	I	L/R clock pin. Determines the input serial data channel.
13	BICK	I	Serial bit clock pin. The clock latches serial data.
14	SDATA	I	Serial data input pin. Number two's complement MSB first.
15	$\overline{PD}$	I	Reset pin. When this pin goes low, the filter and modulator are reset. Make this pin low to reset the filter and modulator when the power is turned on.
16	XTI	I	Clock input pin. Connect a crystal oscillator between XTI and XTO or input the external CMOS clock to XTI The clock frequency can be selected with the CKS pin.
17	XTO	O	Crystal oscillator output pin. If the crystal oscillator is used, connect it between the XTO and XTI pins. If the external clock is used, open this pin.
18	SMUTE	I	Soft mute pin (pull down). High : Soft mute, Low : Cancel
19, 20	DEM0, DEM1	I	De-emphasis mode pin. Supports three frequencies.
21	CKS	I	Clock select pin. Low : CLK 256 fd, High : CLK 384 fs
22	DZF	O	Zero input detection pin. High when the data input to the SDATA pin for both channels becomes zero 8192 times consecutively.
23	AOUTR–	O	Right-channel analog negative output pin.
24	AOUTR+	O	Right-channel analog positive output pin.
25	AOUTL–	O	Left-channel analog negative output pin.
26	AOUTL+	O	Left-channel analog positive output pin.
27, 28	NC	–	

SEMICONDUCTOR DATA

AC/DC Converter : AK5340-VS (TX-RX Unit IC25)

■ Terminal connection diagram

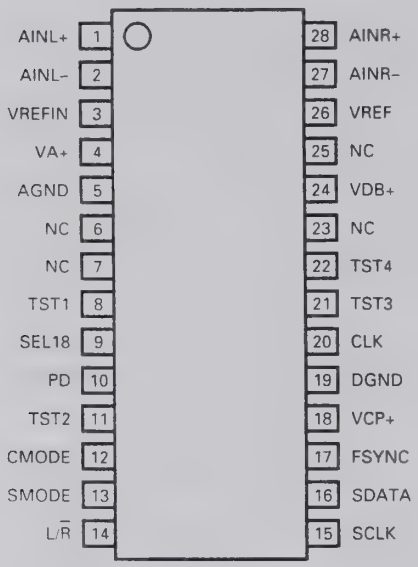

■ Block diagram

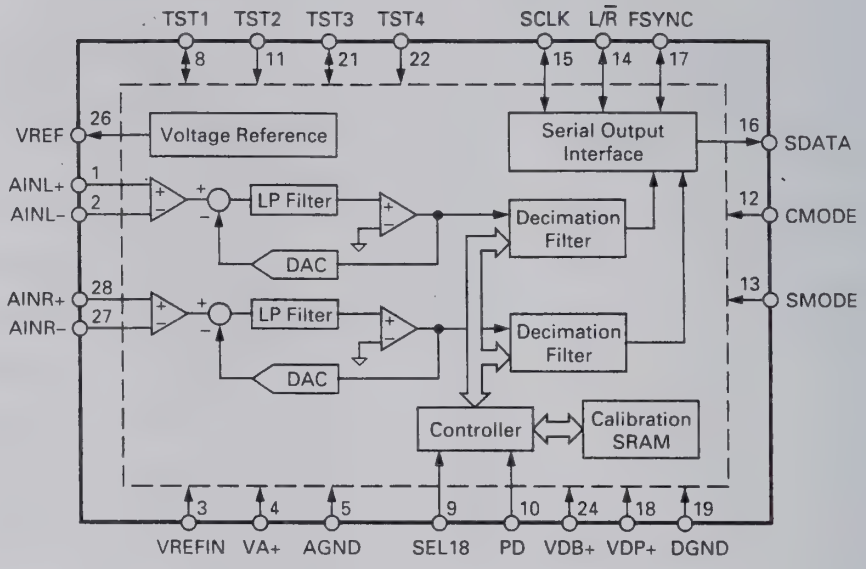

■ Terminal functions

Pin No.	Pin name	I/O	Function
1	AINL+	I	Left-channel analog non-inverted input pin.
2	AINL–	I	Left-channel analog inverted input pin.
3	VREFIN	I	Reference voltage input pin. Normally connect to the VREF pin. The input range is 1.6 times the difference between VA+ and the voltage input to this pin.
4	VA+	–	Analog section analog power supply pin (+5V).
5	AGND	–	Analog section analog ground pin.
6, 7	NC	–	
8	TST1	–	Test pin. Open or connect to DGND.
9	SEL18	I	Output data length select pin (with pull down resistor). Low : 16 bits, High : 18 bits
10	PD	I	Power down pin. High : Power down mode. Offset calibration starts at a falling edge. When the power is turned on or the clock frequency is changed, calibration must be carried out.
11	TST2	–	Test pin. Open or connect to DGND.
12	CMODE	I	Master clock select pin. Low : CLK 256 fs (12.288MHz @fs : 48kHz), High : CLK 384 fs (18.432MHz @fs : 48kHz)
13	SMODE	I	Interface clock select pin. Set the input/output of each of the L/R̄, SCLK, and FSYNC clock pins. Low : Save mode (all input pins), High : Master mode (all output pins)
14	L/R̄	I/O	Input channel select pin. Slave mode : The fs clock is input. Lch MSB data is output at a rising edge and Rch MSB data is output at a falling edge of the clock signal. Master mode : The fs clock is output. SDATA is output one clock after the L/R̄ edge. High when the power is down (PD : High).
15	SCLK	I/O	Serial data clock pin. One bit of data is output at a falling edge of the clock. Slave mode : Normally a 32 to 64 fs clock is input. Master mode : A 64 fs clock is output. Low when the power is down (PD : High).
16	SDATA	O	Serial data output pin. Data is number two's complement and the MSB is output first. Goes low after 16/18 bits are output. Low when the power is down (PD : High).
17	FSYNC	I/O	Frame synchronization clock pin. Slave mode : SDATA output is enabled when the pin is high. Master mode : The 2 fs clock is output. High when 16-bit data is output. The two low-order bits are low when 18-bit output is selected. Low when the power is down (PD : High).
18	VDP+	–	Digital section power supply pin (+5V).
19	DGND	–	Digital section ground pin.
20	CLK	I	Master clock input pin. When CMODE is high, CLK : 384 fs. When CMODE is low, CLK : 256 fs.
21, 22	TST3, TST4	–	Test pin. Open or connect to DGND.

SEMICONDUCTOR DATA

Pin No.	Pin name	I/O	Function
23	NC	–	
24	VDB+	–	Digital section power supply pin (+5V). (Silicon PCB potential)
25	NC	–	
26	VREF	O	Reference voltage output pin (VA+) – 2.6V. Output based on VA+. Normally connect this output to the VREFIN pin
27	AINR–	I	Right-channel analog inverted output pin.
28	AINR+	I	Right-channel analog non-inverted output pin.

DC/AC Converter : PCM69AU (TX-RX Unit IC34)

■ Terminal connection diagram

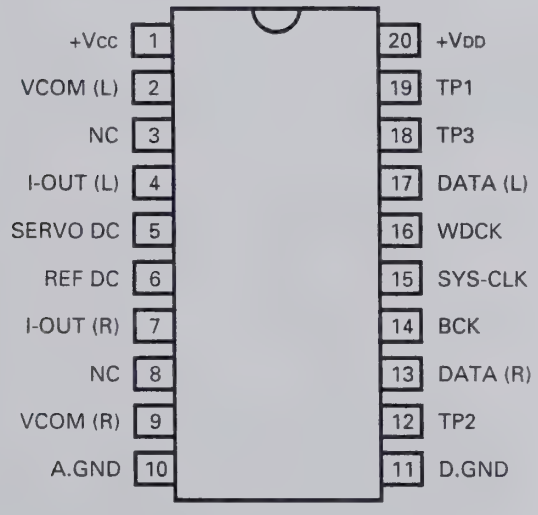

■ Terminal functions

Pin No.	Pin name	Function
1	+VCC	Analog Positive power supply
2	VCOM (L)	Lch V common
3	NC	
4	I-OUT (L)	Lch current output
5	SERVO DC	Servo filter
6	REF DC	Reference filter
7	I-OUT (R)	Rch current output
8	NC	
9	VCOM (R)	Rch V common
10	A. GND	Analog common
11	D. GND	digital common
12	TP2	Test pin 2
13	DATA (R)	Rch data input
14	BCK	Bit clock input
15	SYS-CLK	System clock input
16	WDCK	Word clock input
17	DATA (L)	Lch data input
18	TP3	Test pin 3
19	TP1	Test pin 1
20	+VDD	Digital positive power supply

PARTS LIST

CAPACITORS

CC 45 TH 1H 220 J
1 2 3 4 5 6

1 = Type ... ceramic, electrolytic, etc.
2 = Shape ... round, square, ect.
3 = Temp. coefficient
4 = Voltage rating
5 = Value
6 = Tolerance

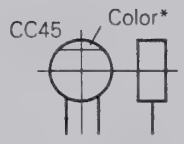

• Capacitor value

010 = 1pF
100 = 10pF
101 = 100pF
102 = 1000pF = 0.001µF
103 = 0.01µF

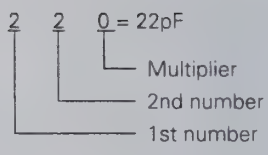

• Temperature coefficient

1st Word	C	L	P	R	S	T	U
Color*	Black	Red	Orange	Yellow	Green	Blue	Violet
ppm/°C	0	–80	–150	–220	–330	–470	–750

2nd Word	G	H	J	K	L
ppm/°C	±30	±60	±120	±250	±500

Example : CC45TH = –470 ± 60ppm/°C

• Tolerance

Code	C	D	G	J	K	M	X	Z	P	No code
(%)	±0.25	±0.5	±2	±5	±10	±20	+40	+80	+100	More than 10µF – 10 ~ +50
							–20	–20	–0	Less than 4.7µF –10 ~ +75

Less than 10pF

Code	B	C	D	F	G
(pF)	±0.1	±0.25	±0.5	±1	±2

• Voltage rating

2nd word / 1st word	A	B	C	D	E	F	G	H	J	K	V
0	1.0	1.25	1.6	2.0	2.5	3.15	4.0	5.0	6.3	8.0	–
1	10	12.5	16	20	25	31.5	40	50	63	80	35
2	100	125	160	200	250	315	400	500	630	800	–
3	1000	1250	1600	2000	2500	3150	4000	5000	6300	8000	–

• Chip capacitors (Refer to the table above except dimension)

(EX) CC 73 F SL 1H 000 J
1 2 3 4 5 6 7
(Chip) (CH, RH, UJ, SL)

(EX) CK 73 F F 1H 000 Z
1 2 3 4 5 6 7
(Chip) (B, F)

RESISTORS

• Chip resistor (Carbon)

(EX) RD 73 E B 2B 000 J
1 2 3 4 5 6 7
(Chip) (B,F)

• Carbon resistor (Normal type)

(EX) RD 14 B B 2C 000 J
1 2 3 4 5 6 7

1 = Type ... ceramic, electrolytic, etc.
2 = Shape ... round, square, ect.
3 = Dimension
4 = Temp. coefficient
5 = Voltage rating
6 = Value
7 = Tolerance

Dimension

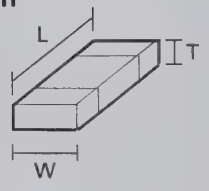

• Dimension (Chip capacitor)

Dimension code	L	W	T
Empty	5.6 ± 0.5	5.0 ± 0.5	Less than 2.0
E	3.2 ± 0.2	1.6 ± 0.2	Less than 1.25
F	2.0 ± 0.3	1.25 ± 0.2	Less than 1.25

• Dimension (Chip resistor)

Dimension code	L	W	T	Wattage
E	3.2 ± 0.2	1.6 ± 0.2	0.57	2B
F	2.0 ± 0.3	1.25 ± 0.2	0.45	2A

Rating wattage

Code	Wattage	Code	Wattage	Code	Wattage
2A	1/10W	2E	1/4W	3A	1W
2B	1/8W	2H	1/2W	3D	2W
2C	1/6W				

PARTS LIST

*New Parts. ⚠ indicates safety critical components
Parts without **Parts No.** are not supplied.
Les articles non mentionnes dans le **Parts No.** ne sont pas fournis.
Teile ohne **Parts No.** werden nicht geliefert.

L : Scandinavia **K**: USA **P** . Canada
Y: PX (Far East, Hawaii) **T**: England **E** : Europe
Y: AAFES (Europe) **X**: Australia **M**. Other Areas

TS-870S

Ref. No.	Address	New parts	Parts No.	Description	Destination
TS-870S					
1	1B	*	A01-2097-01	METALLIC CABINET (UPPER)	
2	3B	*	A01-2098-01	METALLIC CABINET (LOWER)	
33	3A,2D	*	A62-0382-02	PANEL ASSY	
3	2C	*	A62-0384-02	PANEL	
4	2D	*	B10-1227-03	FRONT GLASS	
5	2D	*	B11-1123-04	REFLECTOR	
6	1E	*	B38-0736-05	DISPLAY ASSY	
7	2B		B42-3343-04	S/NO LABBL	
8	3N		B42-5526-04	STICKER	K
9	2C		B43-1045-04	BADGE (KENWOOD)	
10	2C	*	B43-1101-04	BADGE (DSP)	
11	3N		B44-2163-04	UPC CORD LABEL	
12	1O		B46-0310-03	WARRNTY CARD	EE2E3E9
12	1O		B46-0410-40	WARRNTY CARD	K
12	1O		B46-0422-00	WARRNTY CARD	P
13	1O	*	B62-0542-00	INSTRUCTION MANUAL (ENGLISH)	
14	1O	*	B62-0543-00	INSTRUCTION MANUAL (SPANISH)	MM2E2E3
15	1O	*	B62-0544-00	INSTRUCTION MANUAL (NETHERLAND)	MM2E2E3
16	1O	*	B62-0545-00	INSTRUCTION MANUAL (FRENCH)	PMM2
16	1O	*	B62-0545-00	INSTRUCTION MANUAL (FRENCH)	E2E3E9
17	1O	*	B62-0546-00	INSTRUCTION MANUAL (GERMAN)	E
18	1O	*	B62-0547-00	INSTRUCTION MANUAL (ITALIAN)	E
19	2B	*	B72-0911-04	MODEL NAME PLATE	KMM2XP
19	2B	*	B72-0912-04	MODEL NAME PLATE	EE2E3E9
20	1H		E04-0167-05	RF COAXIAL CABLE RECEPTACLE (M)	
21	1N		E07-0751-05	DIN PLUG (7P) ACSY	
22	1N		E07-1351-05	DIN PLUG (13P) ACSY	
23	1H		E23-0992-04	EARTH LUG (ANT)	
24	1N	*	E30-3157-15	DC CORD ACSY	
W51	2K,3K		E31-3433-05	LEAD WIRE WITH MINIPIN PLUG	
W52	3I,4K		E37-0062-05	LEAD WIRE WITH MINIPIN PLUG	
W53	2I,4K	*	E37-0518-05	LEAD WIRE WITH MINIPIN PLUG	
W54	1I,2I	*	E37-0519-05	LEAD WIRE WITH MINIPIN PLUG	
W56	1J,2K	*	E37-0521-05	LEAD WIRE WITH MINIPIN PLUG	
W57	1I,4K	*	E37-0522-05	LEAD WIRE WITH MINIPIN PLUG	
W58	1I	*	E37-0523-05	FLAT CABLE	
W59	2I,1J	*	E37-0524-05	FLAT CABLE	
W60	2A	*	E37-0526-05	FLAT CABLE	
W61	2A	*	E37-0527-05	FLAT CABLE	
W62	3I	*	E37-0528-05	FLAT CABLE	
W63-1	4J	*	E37-0529-05	FLAT CABLE	
W63-2	3I,4I	*	E37-0529-05	FLAT CABLE	
W64	4J	*	E37-0530-05	FLAT CABLE	
W65	3I	*	E37-0531-05	FLAT CABLE	
W66	3I,4I	*	E37-0532-05	FLAT CABLE	
W67	2A	*	E37-0533-05	FLAT CABLE	
W68	2A	*	E37-0534-05	FLAT CABLE	
W69	2I,4I	*	E37-0535-05	LEAD WIRE WITH MINIPIN PLUG	
W70	2A	*	E37-0537-05	LEAD WIRE WITH CONNECTOR	
W71	1I,1J	*	E37-0538-05	LEAD WIRE WITH CONNECTOR	
W72	1I,4K	*	E37-0540-05	LEAD WIRE WITH CONNECTOR	
W73	1I,1J	*	E37-0541-15	LEAD WIRE WITH CONNECTOR	
W74	1K	*	E37-0542-05	LEAD WIRE WITH CONNECTOR	
W75	2J	*	E37-0543-05	LEAD WIRE WITH CONNECTOR	
W76	2A	*	E37-0547-15	LEAD WIRE WITH CONNECTOR (SP)	
W77	2J	*	E37-0548-05	LEAD WIRE WITH CONNECTOR	
W78	2I,4I	*	E37-0549-05	LEAD WIRE WITH CONNECTOR	
W79	2A	*	E37-0550-15	LEAD WIRE WITH CONNECTOR	
W80	2I,4J	*	E37-0551-05	LEAD WIRE WITH CONNECTOR	
W81	1I,4I	*	E37-0552-05	LEAD WIRE WITH CONNECTOR	
W82	2K,3K	*	E37-0569-05	LEAD WIRE WITH MINIPIN PLUG	
W83	–	*	E37-0570-05	LEAD WIRE WITH CONNECTOR (VS-2)	
26	1N		F05-2531-05	FUSE (25A/32V) ACSY	
27	1N		F06-4029-05	FUSE (4A/250V) ACSY	
28	2G	*	F09-0449-05	FAN MOTOR	
29	3G		F10-1206-04	SHIELDING COVER (EARTH SPRING)	
30	2B,1G		F10-1468-13	SHIELDING COVER (FINAL)	
31	1G		G02-0574-04	FLAT SPRING (AVR)	
32	2G	*	G02-0767-04	FLAT SPRING (THERMMISTOR)	
34	1A		G10-0697-04	FIBROUS SHEET (SP)	
35	1D		G10-0702-04	FIBROUS SHEET (SUB 2)	
36	1A		G10-0703-04	FIBROUS SHEET (CASE)	
39	1B		G13-0934-04	CUSHION (UPPER CASE)	
40	2G		G13-1310-04	CUSHION (FAN)	
41	4F	*	G13-1327-04	CUSHION (DRU-3)	
42	2D	*	G13-1480-04	CUSHION (KNOB)	
43	2D	*	G13-1481-04	CUSHION (KNOB)	
44	2D	*	G13-1482-04	CUSHION (KNOB)	
45	2D	*	G13-1483-04	CUSHION (KNOB)	
46	1A	*	G13-1498-04	CUSHION (SP)	
47	3B	*	G13-1511-04	CUSHION (LOWER CASE)	
50	2N	*	H10-2791-01	POLYSTYRENE FOAMED FIXTURE (F)	
51	2O	*	H10-2792-11	POLYSTYRENE FOAMED FIXTURE (R)	
52	1N	*	H13-0963-04	CARTON BOARD	
53	2O		H20-1437-03	PROTECTION COVER	
54	1N		H25-0029-04	BAG (FUSE)	
55	1N		H25-0079-04	BAG (MIC)	
56	1N		H25-0708-04	BAG (DC CORD)	
57	2O	*	H52-0730-02	ITEM CARTON CASE	
58	3O	*	H62-0641-03	OUTER PACKING CASE	
59	3B		J02-0049-14	FOOT (REAR)	
60	1A,3A		J02-0441-05	FOOT (SIDE)	
61	3A	*	J02-0474-05	FOOT (FRONT)	
62	2G		J21-4326-03	HARDWARE FIXTURE (FAN)	
63	1D	*	J21-4496-05	HARDWARE FIXTURE (PHONE JACK)	
64	2D		J31-0141-04	COLLAR (MIC)	
65	2H	*	J32-0923-04	HEXAGON BOSS	
–			J61-0307-05	BAND	
70	1B		K01-0416-05	HANDLE ASSY	
71	2C	*	K21-1102-04	KNOB (MAIN . WITH SCREW)	
72	2C	*	K29-4966-04	KNOB RING (MAIN)	
73	2D	*	K29-4967-03	KNOB (FILTER)	
74	2C	*	K29-4968-03	KNOB (M.CH,RIT : WITH SPRING)	
75	2C	*	K29-4969-03	KNOB (INSIDE)	
76	2C	*	K29-4970-03	KNOB (OUTSIDE)	
77	1C	*	K29-4978-03	KNOB (POWER)	
78	1D	*	K29-4979-03	KNOB (UP/DOWN)	

PARTS LSIT

TS-870S
RF UNIT (X44-3210-00)

Ref. No.	Address	New parts	Parts No.	Description	Destination
79	1C	*	K29-4980-03	KNOB (ANT, etc.)	
80	1D	*	K29-4981-03	KNOB (LED)	
81	1C,1D	*	K29-4982-03	KNOB (AT TUNE, etc.)	
82	1D	*	K29-4983-03	KNOB (LED)	
83	1C	*	K29-4984-03	KNOB (QUICK MEMO)	
84	1C	*	K29-4985-03	KNOB (LSB/USB)	
85	1C	*	K29-4986-03	KNOB (CW/-R)	
86	1C	*	K29-4987-03	KNOB (FSK/-R)	
87	1C	*	K29-4988-03	KNOB (FM/AM)	
88	1D	*	K29-4989-03	KNOB (AUTO NOTCH)	
89	1D	*	K29-4990-03	KNOB (BEAT CANCEL)	
90	1D	*	K29-4991-03	KNOB (N.R)	
91	1D	*	K29-4992-03	KNOB (TX EQ.)	
A	1H		N09-0372-04	SCREW (DC)	
B	1H		N09-0682-04	SCREW (GND)	
C	3F		N09-2051-05	SCREW	X
D	1H		N11-0040-46	FLANGE NUT (GND)	
E	1H		N14-0509-05	NUT (GND)	
F	1H		N15-1040-46	FLAT WASHER (GND)	
G	1D,1E		N32-2606-46	FLAT HEAD SCREW	
H	2A,3A		N32-3006-46	FLAT HEAD SCREW (SUB PANEL)	
I	1B,3B		N33-3006-41	OVAL HEAD SCREW (CASE)	
J	2A,2F		N87-2606-46	BRAZIER HEAD SCREW (UNIT,RL)	
K	1A,1H		N87-3006-46	BRAZIER HEAD SCREW (AT,FAN)	
L	2G,2H		N87-3008-46	BRAZIER HEAD SCREW	
M	2B,1G		N88-2608-46	FLAT HEAD SCREW (FINAL)	
N	2D		N90-3008-46	TP HEAD MACHIN SCREW (PANEL)	
P	3A,3B		N91-3010-46	TP HEAD TAPPING SCREW (FOOT)	
SP	1A		T07-0252-15	LOUDSPEAKER (8 ohm 1W)	
MIC	1N		T91-0352-15	MICROPHONE ACSY	
93	1E		W02-1836-05	ENCODER	
BATT	2A	*	W09-0873-05	LITHIUM CELL (3V 220MAh)	

RF UNIT (X44-3210-00)

C1			CK73FB1H103K	CHIP C	0.010UF	K
C2			CC73FCH1H121J	CHIP C	120PF	J
C3			CK73FF1C105Z	CHIP C	1.0UF	Z
C4,5			CK73FB1H103K	CHIP C	0.010UF	K
C6			CK73FB1E103K	CHIP C	0.010UF	K
C7			CK73FB1H103K	CHIP C	0.010UF	K
C8			CK73FB1H102K	CHIP C	1000PF	K
C10			CK73FB1H103K	CHIP C	0.010UF	K
C14			CK73FB1E103K	CHIP C	0.010UF	K
C15			CK73FF1C105Z	CHIP C	1.0UF	Z
C16			CK73FF1E104Z	CHIP C	0.10UF	Z
C17			CK73FF1C105Z	CHIP C	1.0UF	Z
C18			CK73FB1E103K	CHIP C	0.010UF	K
C19			CK73FB1H182K	CHIP C	1800PF	K
C21			CK73FB1H682K	CHIP C	6800PF	K
C22			CK73FB1H182K	CHIP C	1800PF	K
C23			CK73FF1E104Z	CHIP C	0.10UF	Z
C27			CK73FF1E104Z	CHIP C	0.10UF	Z
C28			CE04EW1C100M	ELECTRO	10UF	16WV
C29-31			CK73FF1E104Z	CHIP C	0.10UF	Z
C32			CE04EW1C100M	ELECTRO	10UF	16WV
C33			CK73FF1C105Z	CHIP C	1.0UF	Z

Ref. No.	Address	New parts	Parts No.	Description			Destination
C34			CK73FF1E104Z	CHIP C	0.10UF	Z	
C35			CC73FCH1H050C	CHIP C	5.0PF	C	
C36			CK73FB1H103K	CHIP C	0.010UF	K	
C39,40			CK73FB1E103K	CHIP C	0.010UF	K	
C47			CK73FB1H103K	CHIP C	0.010UF	K	
C48			CK73FB1H223K	CHIP C	0.022UF	K	
C49			CK73FB1H103K	CHIP C	0.010UF	K	
C50			CK73FF1E104Z	CHIP C	0.10UF	Z	
C51			CK73FF1C105Z	CHIP C	1.0UF	Z	
C52			CK73FB1H222K	CHIP C	2200PF	K	
C53			CK73FB1H682K	CHIP C	6800PF	K	
C54			CK73FB1H222K	CHIP C	2200PF	K	
C55			CK73FF1E104Z	CHIP C	0.10UF	Z	
C56			CK73FF1C105Z	CHIP C	1.0UF	Z	
C57			CK73FB1H472K	CHIP C	4700PF	K	
C58			CK73FF1E104Z	CHIP C	0.10UF	Z	
C59			CK73FF1C105Z	CHIP C	1.0UF	Z	
C60			CC73FSL1H821J	CHIP C	820PF	J	
C61			CK73FF1C105Z	CHIP C	1.0UF	Z	
C62			CK73FB1H472K	CHIP C	4700PF	K	
C63			CK73FF1E104Z	CHIP C	0.10UF	Z	
C64			CK73FB1H222K	CHIP C	2200PF	K	
C65			CK73FF1E104Z	CHIP C	0.10UF	Z	
C66			CK73FF1C105Z	CHIP C	1.0UF	Z	
C67			CK73FB1H561K	CHIP C	560PF	K	
C68			CK73FF1C105Z	CHIP C	1.0UF	Z	
C69			CK73FB1H222K	CHIP C	2200PF	K	
C70			CK73FF1E104Z	CHIP C	0.10UF	Z	
C71			CK73FB1H102K	CHIP C	1000PF	K	
C72			CK73FF1E104Z	CHIP C	0.10UF	Z	
C73			CK73FF1C105Z	CHIP C	1.0UF	Z	
C74			CC73FSL1H271J	CHIP C	270PF	J	
C75			CK73FF1C105Z	CHIP C	1.0UF	Z	
C76			CK73FB1H102K	CHIP C	1000PF	K	
C77,78			CK73FF1E104Z	CHIP C	0.10UF	Z	
C80			CK73FF1C105Z	CHIP C	1.0UF	Z	
C81			CC73FCH1H050C	CHIP C	5.0PF	C	
C83			CC73FCH1H050C	CHIP C	5.0PF	C	
C85			CC73FCH1H050C	CHIP C	5.0PF	C	
C87			CK73FF1C105Z	CHIP C	1.0UF	Z	
C88			CK73FF1E104Z	CHIP C	0.10UF	Z	
C89			CK73FB1H102K	CHIP C	1000PF	K	
C90			CK73FF1E104Z	CHIP C	0.10UF	Z	
C91			CK73FF1C105Z	CHIP C	1.0UF	Z	
C92			CC73FCH1H121J	CHIP C	120PF	J	
C93			CK73FF1C105Z	CHIP C	1.0UF	Z	
C94			CK73FB1H102K	CHIP C	1000PF	K	
C95			CK73FF1E104Z	CHIP C	0.10UF	Z	
C96			CK73FB1H102K	CHIP C	1000PF	K	
C97			CK73FF1E104Z	CHIP C	0.10UF	Z	
C98			CK73FF1C105Z	CHIP C	1.0UF	Z	
C99			CC73FCH1H820J	CHIP C	82PF	J	
C100			CK73FF1C105Z	CHIP C	1.0UF	Z	
C101			CK73FB1H102K	CHIP C	1000PF	K	
C102,103			CK73FF1E104Z	CHIP C	0.10UF	Z	
C105			CK73FF1C105Z	CHIP C	1.0UF	Z	
C106			CC73FCH1H040C	CHIP C	4.0PF	C	
C108			CC73FCH1H040C	CHIP C	4.0PF	C	
C110			CK73FF1C105Z	CHIP C	1.0UF	Z	

PARTS LIST

RF UNIT (X44-3210-00)

Ref. No.	Address	New parts	Parts No.	Description			Destination
C111			CK73FF1E104Z	CHIP C	0.10UF	Z	
C112			CC73FSL1H391J	CHIP C	390PF	J	
C113			CK73FF1E104Z	CHIP C	0.10UF	Z	
C114			CK73FF1C105Z	CHIP C	1.0UF	Z	
C115			CC73FCH1H680J	CHIP C	68PF	J	
C116			CK73FF1C105Z	CHIP C	1.0UF	Z	
C117			CC73FSL1H151J	CHIP C	150PF	J	
C118,119			CK73FF1E104Z	CHIP C	0.10UF	Z	
C121			CK73FF1C105Z	CHIP C	1.0UF	Z	
C122			CC73FCH1H050C	CHIP C	5.0PF	C	
C124			CC73FCH1H050C	CHIP C	5.0PF	C	
C126			CK73FF1C105Z	CHIP C	1.0UF	Z	
C127			CK73FF1E104Z	CHIP C	0.10UF	Z	
C128			CC73FCH1H221J	CHIP C	220PF	J	
C129			CK73FF1E104Z	CHIP C	0.10UF	Z	
C130			CK73FF1C105Z	CHIP C	1.0UF	Z	
C131			CC73FCH1H330J	CHIP C	33PF	J	
C132			CK73FF1C105Z	CHIP C	1.0UF	Z	
C133			CK73FF1E104Z	CHIP C	0.10UF	Z	
C134			CK73FB1H103K	CHIP C	0.010UF	K	
C135			CC73FCH1H121J	CHIP C	120PF	J	
C136			CK73FF1E104Z	CHIP C	0.10UF	Z	
C137			CC73FSL1H221J	CHIP C	220PF	J	
C138			CK73FB1E103K	CHIP C	0.010UF	K	
C139			CK73FF1E104Z	CHIP C	0.10UF	Z	
C140,141			CK73FB1E103K	CHIP C	0.010UF	K	
C142			CK73FF1E104Z	CHIP C	0.10UF	Z	
C143			CC73FCH1H390J	CHIP C	39PF	J	
C144,145			CK73FB1E103K	CHIP C	0.010UF	K	
C146,147			CK73FF1E104Z	CHIP C	0.10UF	Z	
C148			CK73FB1E103K	CHIP C	0.010UF	K	
C149			CK73FF1E104Z	CHIP C	0.10UF	Z	
C150,151			CK73FF1C105Z	CHIP C	1.0UF	Z	
C152,153			CK73FF1E104Z	CHIP C	0.10UF	Z	
C154			CC73FCH1H101J	CHIP C	100PF	J	
C155			CC73FCH1H150J	CHIP C	15PF	J	
C156			CK73FB1E103K	CHIP C	0.010UF	K	
C157			CC73FSL1H221J	CHIP C	220PF	J	
C158			CK73FB1H471K	CHIP C	470PF	K	
C159			CK73FB1H102K	CHIP C	1000PF	K	
C160			CC73FCH1H470J	CHIP C	47PF	J	
C161			CC73FCH1H820J	CHIP C	82PF	J	
C162			CK73FF1E104Z	CHIP C	0.10UF	Z	
C163			CK73FB1E103K	CHIP C	0.010UF	K	
C164			CC73FSL1H471J	CHIP C	470PF	J	
C165			CK73FB1E103K	CHIP C	0.010UF	K	
C166,167			CK73FF1E104Z	CHIP C	0.10UF	Z	
C168			CK73FB1E103K	CHIP C	0.010UF	K	
C169			CC73FCH1H680J	CHIP C	68PF	J	
C170			CK73FF1E104Z	CHIP C	0.10UF	Z	
C171			CC73FCH1H470J	CHIP C	47PF	J	
C172,173			CK73FB1E103K	CHIP C	0.010UF	K	
C174			CC73FSL1H471J	CHIP C	470PF	J	
C175			CC73FCH1H470J	CHIP C	47PF	J	
C176			CE04EW1C470M	ELECTRO	47UF	16WV	
C177			CC73FCH1H050C	CHIP C	5.0PF	C	
C178			CC73FCH1H680J	CHIP C	68PF	J	
C179			CK73FF1E104Z	CHIP C	0.10UF	Z	
C180			CC73FCH1H020C	CHIP C	2.0PF	C	

Ref. No.	Address	New parts	Parts No.	Description			Destination
C181			CC73FCH1H050C	CHIP C	5.0PF	C	
C182			CK73FB1E103K	CHIP C	0.010UF	K	
C184			CC73FCH1H050C	CHIP C	5.0PF	C	
C185			CC73FCH1H220J	CHIP C	22PF	J	
C186			CC73FCH1H050C	CHIP C	5.0PF	C	
C187			CC73FCH1H1R5C	CHIP C	1.5PF	C	
C188			CC73FCH1H220J	CHIP C	22PF	J	
C189			CC73FCH1H0R5C	CHIP C	0.5PF	C	
C190			CK73FB1E103K	CHIP C	0.010UF	K	
C191			CC73FSL1H681J	CHIP C	680PF	J	
C192,193			CK73FB1H102K	CHIP C	1000PF	K	
C194			CC73FSL1H331J	CHIP C	330PF	J	
C195			CC73FSL1H471J	CHIP C	470PF	J	
C196			CK73FB1H102K	CHIP C	1000PF	K	
C197			CK73FB1E103K	CHIP C	0.010UF	K	
C198			CC73FCH1H020C	CHIP C	2.0PF	C	
C199			CK73FB1E103K	CHIP C	0.010UF	K	
C201-206			CK73FB1E103K	CHIP C	0.010UF	K	
C207			CC73FCH1H470J	CHIP C	47PF	J	
C208			CK73FF1E104Z	CHIP C	0.10UF	Z	
C209			CK73FB1H102K	CHIP C	1000PF	K	
C211,212			CK73FF1E104Z	CHIP C	0.10UF	Z	
C214			CK73FB1E103K	CHIP C	0.010UF	K	
C215			CK73FF1E104Z	CHIP C	0.10UF	Z	
C216			CE04EW1C100M	ELECTRO	10UF	16WV	
C217			CK73FF1E104Z	CHIP C	0.10UF	Z	
C218			CC73FCH1H470J	CHIP C	47PF	J	
C219			CK73FF1E104Z	CHIP C	0.10UF	Z	
C220			CE04EW1H010M	ELECTRO	1.0UF	50WV	
C221-223			CK73FF1E104Z	CHIP C	0.10UF	Z	
C224			CK73FB1E103K	CHIP C	0.010UF	K	
C225			CK73FB1H102K	CHIP C	1000PF	K	
C226-228			CK73FB1E103K	CHIP C	0.010UF	K	
C229			CC73FCH1H050C	CHIP C	5.0PF	C	
C230			CK73FB1E103K	CHIP C	0.010UF	K	
C231			CC73FCH1H220J	CHIP C	22PF	J	
C232			CK73FF1E104Z	CHIP C	0.10UF	Z	
C233			CK73FB1H102K	CHIP C	1000PF	K	
C234			CK73FF1E104Z	CHIP C	0.10UF	Z	
C236			CK73FB1E103K	CHIP C	0.010UF	K	
C237			CC73FCH1H220J	CHIP C	22PF	J	
C238			CK73FB1E103K	CHIP C	0.010UF	K	
C239			CK73FB1H471K	CHIP C	470PF	K	
C240,241			CK73FB1E103K	CHIP C	0.010UF	K	
C242			CC73FSL1H471J	CHIP C	470PF	J	
C243,244			CK73FB1E103K	CHIP C	0.010UF	K	
C245			CC73FSL1H471J	CHIP C	470PF	J	
C246			CC73FCH1H010C	CHIP C	1.0PF	C	
C247			CC73FSL1H471J	CHIP C	470PF	J	
C248			CK73FB1E103K	CHIP C	0.010UF	K	
C249			CC73FCH1H0R5C	CHIP C	0.5PF	C	
C250			CC73FCH1H010C	CHIP C	1.0PF	C	
C251-253			CK73FB1E103K	CHIP C	0.010UF	K	
C254			CK73FF1E104Z	CHIP C	0.10UF	Z	
C256,257			CK73FB1E103K	CHIP C	0.010UF	K	
C260			CK73FB1E103K	CHIP C	0.010UF	K	
C262,263			CK73FB1E103K	CHIP C	0.010UF	K	
C265-273			CK73FB1E103K	CHIP C	0.010UF	K	
C274			CC73FCH1H180J	CHIP C	18PF	J	

PARTS LSIT

RF UNIT (X44-3210-00)

Ref. No.	Address	New parts	Parts No.	Description			Destination
C275			CC73FCH1H150J	CHIP C	15PF	J	
C276			CC73FCH1H180J	CHIP C	18PF	J	
C277-279			CK73FB1E103K	CHIP C	0.010UF	K	
C280			CC73FCH1H101J	CHIP C	100PF	J	
C281,282			CC73FCH1H220J	CHIP C	22PF	J	
C283			CC73FCH1H330J	CHIP C	33PF	J	
C285			CK73FB1E223K	CHIP C	0.022UF	K	
C286			CE04EW1H010M	ELECTRO	1.0UF	50WV	
C287			CE04EW1C100M	ELECTRO	10UF	16WV	
C288			CK73FB1H473K	CHIP C	0.047UF	K	
C289			CE04EW1C100M	ELECTRO	10UF	16WV	
C290			CK73FB1E103K	CHIP C	0.010UF	K	
C291			CE04EW1HR47M	ELECTRO	0.47UF	50WV	
C292			CK73FB1E103K	CHIP C	0.010UF	K	
C293			CC73FCH1H101J	CHIP C	100PF	J	
C294			CK73FF1E104Z	CHIP C	0.10UF	Z	
C295-298			CK73FB1E103K	CHIP C	0.010UF	K	
C299,300			CK73FB1H103K	CHIP C	0.010UF	K	
C301			CK73FB1H102K	CHIP C	1000PF	K	
C302			CK73FB1H103K	CHIP C	0.010UF	K	
C303			CK73FB1H102K	CHIP C	1000PF	K	
C304			CK45FE2H222P	CERAMIC	2200PF	P	
C305			CK73FB1H103K	CHIP C	0.010UF	K	
C306,307			CK73FB1H102K	CHIP C	1000PF	K	
C308			CK73FB1H103K	CHIP C	0.010UF	K	
C310			CK73FB1H103K	CHIP C	0.010UF	K	
C312			CE04EW1C100M	ELECTRO	10UF	16WV	
C313,314			CK73FB1H103K	CHIP C	0.010UF	K	
C315			CE04EW1C100M	ELECTRO	10UF	16WV	
C316-327			CK73FB1H102K	CHIP C	1000PF	K	
C328-331			CK73FB1E103K	CHIP C	0.010UF	K	
C332			CK73FB1H102K	CHIP C	1000PF	K	
C333			CK73FB1E103K	CHIP C	0.010UF	K	
C334			CC73FCH1H330J	CHIP C	33PF	J	
C335			CK73FB1E103K	CHIP C	0.010UF	K	
C338			CC73FSL1H221J	CHIP C	220PF	J	
C339,340			CC73FCH1H220J	CHIP C	22PF	J	
C341-346			CK73FB1E103K	CHIP C	0.010UF	K	
C347,348			CC73FCH1H100D	CHIP C	10PF	D	
C350			C92-0004-05	CHIP-TAN	1.0UF	16WV	
C500			CK73FB1E103K	CHIP C	0.010UF	K	
C501			CE04NW1C100M	ELECTRO	10UF	16WV	
C502			CK73FB1E103K	CHIP C	0.010UF	K	
C503			CE04NW1C100M	ELECTRO	10UF	16WV	
C504			CK73FB1E103K	CHIP C	0.010UF	K	
C505			CE04EW1C100M	ELECTRO	10UF	16WV	
C506			CK73FB1E103K	CHIP C	0.010UF	K	
C507			CE04NW1C100M	ELECTRO	10UF	16WV	
C508			CK73FB1E103K	CHIP C	0.010UF	K	
C509			CE04NW1C100M	ELECTRO	10UF	16WV	
C510			CK73FB1E103K	CHIP C	0.010UF	K	
C511			CE04EW1C100M	ELECTRO	10UF	16WV	
C512,513			CK73FB1E103K	CHIP C	0.010UF	K	
C514			C92-0516-05	CHIP-TAN	4.7UF	16WV	
C515			CC73FSL1H271J	CHIP C	270PF	J	
C516			CC73FSL1H561J	CHIP C	560PF	J	
C517			CK73FB1E103K	CHIP C	0.010UF	K	
C518			CC73FSL1H271J	CHIP C	270PF	J	
C519,520			CK73FB1E103K	CHIP C	0.010UF	K	

Ref. No.	Address	New parts	Parts No.	Description			Destination
C521			CE04EW1C100M	ELECTRO	10UF	16WV	
C522			CK73FB1E103K	CHIP C	0.010UF	K	
C523			CC73FCH1H121J	CHIP C	120PF	J	
C524			CC73FSL1H181J	CHIP C	180PF	J	
C525			CC73FCH1H121J	CHIP C	120PF	J	
C526-530			CK73FB1E103K	CHIP C	0.010UF	K	
C531			CC73FCH1H560J	CHIP C	56PF	J	
C532			CC73FSL1H391J	CHIP C	390PF	J	
C533			CC73FCH1H390J	CHIP C	39PF	J	
C534			CC73FCH1H680J	CHIP C	68PF	J	
C535			CC73FCH1H390J	CHIP C	39PF	J	
C536			CC73FCH1H101J	CHIP C	100PF	J	
C537			CC73FCH1H680J	CHIP C	68PF	J	
C538			CC73FCH1H390J	CHIP C	39PF	J	
C539			CC73FCH1H070D	CHIP C	7.0PF	D	
C540			CC73FCH1H680J	CHIP C	68PF	J	
C541			CC73FCH1H220J	CHIP C	22PF	J	
C542			CC73FCH1H330J	CHIP C	33PF	J	
C543-545			CK73FB1E103K	CHIP C	0.010UF	K	
C546			CC73FCH1H121J	CHIP C	120PF	J	
C547			CE04EW1C470M	ELECTRO	47UF	16WV	
C548-555			CK73FB1E103K	CHIP C	0.010UF	K	
C556			CK73FB1H102K	CHIP C	1000PF	K	
C557			CC73FCH1H330J	CHIP C	33PF	J	
C558			CC73FCH1H0R5C	CHIP C	0.5PF	C	
C560			CC73FCH1H0R5C	CHIP C	0.5PF	C	
C561			CC73FCH1H330J	CHIP C	33PF	J	
C562-564			CK73FB1E103K	CHIP C	0.010UF	K	
C565			C92-0516-05	CHIP-TAN	4.7UF	16WV	
C566,567			CC73FCH1H470J	CHIP C	47PF	J	
C568			CC73FCH1H101J	CHIP C	100PF	J	
C569			CE04EW1C100M	ELECTRO	10UF	16WV	
C570,571			CK73FB1E103K	CHIP C	0.010UF	K	
C572			CC73FCH1H100D	CHIP C	10PF	D	
C573			CC73FCH1H050C	CHIP C	5.0PF	C	
C574-576			CK73FB1E103K	CHIP C	0.010UF	K	
C577			CK73FB1H331K	CHIP C	330PF	K	
C578			CC73FCH1H620J	CHIP C	62PF	J	
C579			CK73FB1H331K	CHIP C	330PF	K	
C581			CC73FCH1H820J	CHIP C	82PF	J	
C583			CK73FB1H103K	CHIP C	0.010UF	K	
C584			CE04EW1C100M	ELECTRO	10UF	16WV	
C585			CK73FB1H103K	CHIP C	0.010UF	K	
C586			CK73FB1H682K	CHIP C	6800PF	K	
C587			CK73FB1H123K	CHIP C	0.012UF	K	
C588			CK73FB1H682K	CHIP C	6800PF	K	
C591			CK73FB1H103K	CHIP C	0.010UF	K	
C593			CK73FB1H102K	CHIP C	1000PF	K	
C594			CC73FSL1H221J	CHIP C	220PF	J	
C595			CK73FB1H103K	CHIP C	0.010UF	K	
C596			CC73FCH1H0R5C	CHIP C	0.5PF	C	
C597			CC73FCH1H270J	CHIP C	27PF	J	
C598-602			CK73FB1H103K	CHIP C	0.010UF	K	
C603			CK73FB1H102K	CHIP C	1000PF	K	
C604			CK73FB1H103K	CHIP C	0.010UF	K	
C606			CC73FCH1H270J	CHIP C	27PF	J	
C618			CE04EW1C101M	ELECTRO	100UF	16WV	
C619			C92-0001-05	CHIP-TAN	0.10UF	35WV	
C620-623			CK73FB1H102K	CHIP C	1000PF	K	

PARTS LIST

RF UNIT (X44-3210-00)

Ref. No.	Address	New parts	Parts No.	Description			Destination
C624			CK73FB1E103K	CHIP C	0.010UF	K	
C625-628			CK73FB1H102K	CHIP C	1000PF	K	
C629			CE04EW1C101M	ELECTRO	100UF	16WV	
C630,631			CK73FB1E103K	CHIP C	0.010UF	K	
C630,631			CK73FB1E103K	CHIP C	0.010UF	K	
C632			CE04EW1C101M	ELECTRO	100UF	16WV	
C633			CC73FCH1H101J	CHIP C	100PF	J	
C634			CC73FCH1H180J	CHIP C	18PF	J	
C635			CK73FB1H102K	CHIP C	1000PF	K	
C636			CC73FCH1H330J	CHIP C	33PF	J	
C637			CC73FCH1H080D	CHIP C	8.0PF	D	
C638			CC73FCH1H120J	CHIP C	12PF	J	
C639			CC73FCH1H560J	CHIP C	56PF	J	
C640			CK73FB1H183K	CHIP C	0.018UF	K	
C641			CC73FCH1H120J	CHIP C	12PF	J	
C642			CK73FB1H102K	CHIP C	1000PF	K	
C643			CC73FCH1H330J	CHIP C	33PF	J	
C644			CC73FCH1H120J	CHIP C	12PF	J	
C645			CC73FCH1H150J	CHIP C	15PF	J	
C646			CC73FCH1H390J	CHIP C	39PF	J	
C647			CC73FCH1H100D	CHIP C	10PF	D	
C648			CK73FB1H102K	CHIP C	1000PF	K	
C649			CC73FCH1H160J	CHIP C	16PF	J	
C650			CC73FCH1H240J	CHIP C	24PF	J	
C651			CC73FCH1H150J	CHIP C	15PF	J	
C652			CC73FCH1H390J	CHIP C	39PF	J	
C653			CK73FB1H183K	CHIP C	0.018UF	K	
C654			CC73FCH1H040C	CHIP C	4.0PF	C	
C655			CK73FB1H102K	CHIP C	1000PF	K	
C656			CC73FCH1H150J	CHIP C	15PF	J	
C657			CC73FCH1H200J	CHIP C	20PF	J	
C658			CC73FCH1H160J	CHIP C	16PF	J	
C659,660			CK73FB1H102K	CHIP C	1000PF	K	
C661			CC73FCH1H100D	CHIP C	10PF	D	
C662			CC73FCH1H030C	CHIP C	3.0PF	C	
C663			CC73FCH1H020C	CHIP C	2.0PF	C	
C664			CC73FCH1H040C	CHIP C	4.0PF	C	
C665,666			CK73FB1H102K	CHIP C	1000PF	K	
C667			CK73FB1E103K	CHIP C	0.010UF	K	
C668			CK73FB1H102K	CHIP C	1000PF	K	
C669			CK73FB1E103K	CHIP C	0.010UF	K	
C670			CK73FB1H102K	CHIP C	1000PF	K	
C671			CC73FCH1H240J	CHIP C	24PF	J	
C672			CK73FB1H102K	CHIP C	1000PF	K	
C673			CC73FCH1H010C	CHIP C	1.0PF	C	
C674			CC73FCH1H240J	CHIP C	24PF	J	
C675			CK73FB1E103K	CHIP C	0.010UF	K	
C676			C92-0004-05	CHIP-TAN	1.0UF	16WV	
C677			CE04EW1C221M	ELECTRO	220UF	16WV	
C678			CK73FB1E103K	CHIP C	0.010UF	K	
C679			CQ92M1H822K	MYLAR	8200PF	K	
C680			C91-1083-05	FILM	0.47UF	63WV	
C681			CK73FB1H102K	CHIP C	1000PF	K	
C682,683			CK73FB1E103K	CHIP C	0.010UF	K	
C684			CK73FB1H103K	CHIP C	0.010UF	K	
C685,686			CK73FB1E103K	CHIP C	0.010UF	K	
C687			CC73FCH1H020C	CHIP C	2.0PF	C	
C688			CC73FCH1H1R5C	CHIP C	1.5PF	C	
C689			CC73FCH1H030C	CHIP C	3.0PF	C	

Ref. No.	Address	New parts	Parts No.	Description			Destination
C690			CC73FCH1H470J	CHIP C	47PF	J	
C691			CC73FCH1H270J	CHIP C	27PF	J	
C692-696			CK73FB1E103K	CHIP C	0.010UF	K	
C697			CE04EW1C100M	ELECTRO	10UF	16WV	
C698			CK73FB1H102K	CHIP C	1000PF	K	
C699			CK73FB1E103K	CHIP C	0.010UF	K	
C700			CK73FB1H102K	CHIP C	1000PF	K	
C701			CC73FCH1H330J	CHIP C	33PF	J	
C702			CC73FCH1H100D	CHIP C	10PF	D	
C703			CC73FCH1H680J	CHIP C	68PF	J	
C704,705			CK73FB1H103K	CHIP C	0.010UF	K	
C706			CE04EW1C470M	ELECTRO	47UF	16WV	
C707			CK73FB1H103K	CHIP C	0.010UF	K	
C708			CE04EW1C101M	ELECTRO	100UF	16WV	
C710			CK73FB1H102K	CHIP C	1000PF	K	
C711			CQ92M1H333K	MYLAR	0.033UF	K	
C712			C91-1083-05	FILM	0.47UF	63WV	
C713			CK73FB1H103K	CHIP C	0.010UF	K	
C714			C92-0516-05	CHIP-TAN	4.7UF	16WV	
C715,716			CK73FB1H102K	CHIP C	1000PF	K	
C717			CE04EW1C101M	ELECTRO	100UF	16WV	
C719			CC73FCH1H020C	CHIP C	2.0PF	C	
C721-726			CC73FCH1H270J	CHIP C	27PF	J	
C727,728			CC73FCH1H100D	CHIP C	10PF	D	
C729			CC73FCH1H020C	CHIP C	2.0PF	C	
C730-732			CK73FB1H102K	CHIP C	1000PF	K	
C744			CK73FB1H102K	CHIP C	1000PF	K	
C750-757			CC73FCH1H101J	CHIP C	100PF	J	
C758-761			CK73FB1H102K	CHIP C	1000PF	K	
C762			CC73FCH1H101J	CHIP C	100PF	J	
C770			CE04EW1C470M	ELECTRO	47UF	16WV	
C771			CK73FB1H103K	CHIP C	0.010UF	K	
C780			CE04EW1E470M	ELECTRO	47UF	25WV	
C781,782			CK73FF1E104Z	CHIP C	0.10UF	Z	
C783			CE04EW1C470M	ELECTRO	47UF	16WV	
C784			CE04EW1E470M	ELECTRO	47UF	25WV	
C785,786			CK73FF1E104Z	CHIP C	0.10UF	Z	
C787			CE04EW1C470M	ELECTRO	47UF	16WV	
C800			CC73FCH1H390J	CHIP C	39PF	J	
C801			CC73FCH1H151J	CHIP C	150PF	J	
C802			CC73FCH1H390J	CHIP C	39PF	J	
C803			CC73FCH1H050C	CHIP C	5.0PF	C	
C804			CK73FB1H103K	CHIP C	0.010UF	K	
C805			CC73FCH1H020C	CHIP C	2.0PF	C	
C806,807			CK73FB1H103K	CHIP C	0.010UF	K	
C808			C92-0004-05	CHIP-TAN	1.0UF	16WV	
C907-912			CK73FB1H102K	CHIP C	1000PF	K	
C914-926			CK73FB1H102K	CHIP C	1000PF	K	
TC506,507			C05-0377-05	TRIMMER CAPACITOR		10PF	
TC508,509			C05-0376-05	TRIMMER CAPACITOR		6PF	
TC800			C05-0344-05	TRIMMER CAPACITOR		30PF	
CN2			E04-0154-05	RF COAXIAL CABLE SOCKET			
CN4			E04-0154-05	RF COAXIAL CABLE SOCKET			
CN5,6			E04-0191-05	RF COAXIAL CABLE SOCKET			
CN7			E40-3238-05	PIN CONNECTOR (3P)			
CN10			E04-0154-05	RF COAXIAL CABLE SOCKET			
CN13		*	E40-5741-05	PIN CONNECTOR (8P)			
CN14		*	E40-5740-05	PIN CONNECTOR (20P)			

PARTS LSIT

RF UNIT (X44-3210-00)

Ref. No.	Address	New parts	Parts No.	Description	Destination
CN15-17			E04-0154-05	RF COAXIAL CABLE SOCKET	
CN500		*	E40-5740-05	PIN CONNECTOR (20P)	
CN501			E40-3237-05	PIN CONNECTOR (2P)	
CN502-505			E04-0154-05	RF COAXIAL CABLE SOCKET (2P)	
CN506			E40-3238-05	PIN CONNECTOR (3P)	
CN508			E40-5606-05	PIN CONNECTOR (3P)	
CN509			E40-5607-05	PIN CONNECTOR (4P)	
CN510			E23-0996-05	TERMINAL (TEST)	
CN800			E40-4463-05	PIN CONNECTOR	
CN801			E40-4464-05	PIN CONNECTOR	
CN901			E40-3300-05	PIN CONNECTOR (3P)	
CN903-907		*	E40-5743-05	FLAT CABLE CONNECTOR (6P)	
J1			E06-0752-05	DIN SOCKET	
J2,3			E13-0166-05	PIN JACK	
J901		*	E11-0462-05	PHONE JACK	
W1		*	E37-0546-05	LEAD WIRE WITH CONNECTOR	
W2		*	E37-0517-05	LEAD WIRE WITH MINIPIN PLUG	
101	2F		F11-1141-04	SHIELDING COVER	
A502	2F		F11-1140-04	SHIELDING CASE	
–			J30-0545-05	SPACER (TO XF1)	
–			J30-0563-05	SPACER (TO XF3, X800)	
CF500,501			L72-0343-05	CERAMIC FILTER (8.4MHZ)	
L1		*	L39-1254-05	COIL	
L2			L19-0324-05	TROIDAL COIL	
L3			L40-1021-14	SMALL FIXED INDUCTOR	
L7			L40-2701-14	SMALL FIXED INDUCTOR	
L8			L40-4791-14	SMALL FIXED INDUCTOR	
L9			L40-2701-14	SMALL FIXED INDUCTOR	
L10			L40-1015-48	SMALL FIXED INDUCTOR (100UH)	
L11			L19-0324-05	TROIDAL COIL	
L12			L40-1005-48	SMALL FIXED INDUCTOR (10UH)	
L13			L40-4705-48	SMALL FIXED INDUCTOR (47UH)	
L14,15			L40-1501-14	SMALL FIXED INDUCTOR	
L16			L40-1021-14	SMALL FIXED INDUCTOR	
L17,18			L40-5691-14	SMALL FIXED INDUCTOR	
L19			L40-1292-14	SMALL FIXED INDUCTOR	
L20			L40-8291-14	SMALL FIXED INDUCTOR	
L21,22			L40-1292-14	SMALL FIXED INDUCTOR	
L23			L40-5691-14	SMALL FIXED INDUCTOR	
L24			L40-1292-14	SMALL FIXED INDUCTOR	
L25			L40-1092-14	SMALL FIXED INDUCTOR	
L26			L40-3391-14	SMALL FIXED INDUCTOR	
L27			L40-1092-14	SMALL FIXED INDUCTOR	
L28-31			L34-4262-05	COIL	
L32			L40-3382-14	SMALL FIXED INDUCTOR	
L33			L40-2792-14	SMALL FIXED INDUCTOR	
L34			L40-3382-14	SMALL FIXED INDUCTOR	
L35			L40-2282-14	SMALL FIXED INDUCTOR	
L36			L40-2292-14	SMALL FIXED INDUCTOR	
L37			L40-2282-14	SMALL FIXED INDUCTOR	
L38-40			L34-4289-05	COIL	
L41			L40-2282-14	SMALL FIXED INDUCTOR	
L42			L40-1292-14	SMALL FIXED INDUCTOR	
L43			L40-2282-14	SMALL FIXED INDUCTOR	
L44-46		*	L34-4392-05	COIL	
L47			L40-2282-14	SMALL FIXED INDUCTOR	
L48			L40-1292-14	SMALL FIXED INDUCTOR	

Ref. No.	Address	New parts	Parts No.	Description	Destination
L49			L40-2282-14	SMALL FIXED INDUCTOR	
L50			L34-4264-05	COIL	
L51			L40-1021-14	SMALL FIXED INDUCTOR	
L52			L34-4265-05	COIL	
L53			L19-0324-05	TROIDAL COIL	
L54			L40-4785-48	SMALL FIXED INDUCTOR (470NH)	
L55			L19-0324-05	TROIDAL COIL	
L56			L40-4705-48	SMALL FIXED INDUCTOR (47UH)	
L57			L40-2785-48	SMALL FIXED INDUCTOR (270NH)	
L58			L40-2285-48	SMALL FIXED INDUCTOR (220NH)	
L59			L19-0324-05	TROIDAL COIL	
L60			L39-1255-05	COIL	
L61			L40-1285-48	SMALL FIXED INDUCTOR (120NH)	
L62			L39-1255-05	COIL	
L63			L40-1015-48	SMALL FIXED INDUCTOR (100NH)	
L64			L39-1255-05	COIL	
L65			L34-4222-05	COIL	
L67		*	L34-4394-05	COIL	
L68			L40-1015-48	SMALL FIXED INDUCTOR (100UH)	
L69			L40-2285-48	SMALL FIXED INDUCTOR (220NH)	
L70		*	L34-4393-05	COIL	
L71			L40-3395-48	SMALL FIXED INDUCTOR (3.3UH)	
L72		*	L34-4394-05	COIL	
L73			L40-2295-48	SMALL FIXED INDUCTOR (2.2UH)	
L74			L40-2285-48	SMALL FIXED INDUCTOR (220NH)	
L75			L34-4209-05	COIL	
L76			L40-3395-48	SMALL FIXED INDUCTOR (3.3UH)	
L77			L34-0943-05	COIL	
L78			L40-4785-48	SMALL FIXED INDUCTOR (470NH)	
L79			L40-3395-48	SMALL FIXED INDUCTOR (3.3UH)	
L81			L34-0535-05	COIL	
L82			L34-0536-05	COIL	
L83,84			L40-1015-48	SMALL FIXED INDUCTOR (100UH)	
L86			L40-2285-48	SMALL FIXED INDUCTOR (220NH)	
L87			L40-4705-48	SMALL FIXED INDUCTOR (47UH)	
L88			L19-0324-05	TROIDAL COIL	
L89		*	L34-4395-05	COIL	
L90			L39-1255-05	COIL	
L91		*	L34-4395-05	COIL	
L92			L34-4211-05	COIL	
L93			L40-1015-48	SMALL FIXED INDUCTOR (100UH)	
L94		*	L34-4395-05	COIL	
L95			L34-4207-05	COIL	
L98			L34-0943-05	COIL	
L99			L34-0781-05	COIL	
L100			L34-0536-05	COIL	
L101			L40-4705-48	SMALL FIXED INDUCTOR (47UH)	
L102			L40-3395-48	SMALL FIXED INDUCTOR (3.3UH)	
L107			L40-1015-48	SMALL FIXED INDUCTOR (100UH)	
L108			L40-1005-48	SMALL FIXED INDUCTOR (10UH)	
L110,111		*	L40-1805-48	SMALL FIXED INDUCTOR (18UH)	
L112,113		*	L40-1081-42	SMALL FIXED INDUCTOR (0.1UH)	
L301		*	L40-1001-42	SMALL FIXED INDUCTOR (10UH)	
L304-310		*	L40-1001-42	SMALL FIXED INDUCTOR (10UH)	
L314-318		*	L40-1001-42	SMALL FIXED INDUCTOR (10UH)	
L500-505			L40-1005-48	SMALL FIXED INDUCTOR (10UH)	
L506,507		*	L40-6805-48	SMALL FIXED INDUCTOR (68UH)	
L508			L40-1005-48	SMALL FIXED INDUCTOR (10UH)	
L509,510		*	L40-2705-48	SMALL FIXED INDUCTOR (27UH)	

PARTS LIST

RF UNIT (X44-3210-00)

Ref. No.	Address	New parts	Parts No.	Description	Destination
L511		*	L40-1805-48	SMALL FIXED INDUCTOR (18UH)	
L512,513		*	L40-2705-48	SMALL FIXED INDUCTOR (27UH)	
L514			L40-2205-48	SMALL FIXED INDUCTOR (22UH)	
L515		*	L40-1805-48	SMALL FIXED INDUCTOR (18UH)	
L516			L40-5695-48	SMALL FIXED INDUCTOR (5.6UH)	
L517			L40-1005-48	SMALL FIXED INDUCTOR (10UH)	
L518			L34-4222-05	COIL	
L519		*	L34-4421-05	COIL	
L520			L34-4222-05	COIL	
L521,522			L40-2285-48	SMALL FIXED INDUCTOR (220NH)	
L523			L40-1005-48	SMALL FIXED INDUCTOR (10UH)	
L524			L40-1095-48	SMALL FIXED INDUCTOR (1UH)	
L525,526			L40-2205-48	SMALL FIXED INDUCTOR (22UH)	
L528		*	L34-4396-05	COIL	
L529,530			L34-4222-05	COIL	
L531-534			L40-1015-48	SMALL FIXED INDUCTOR (100UH)	
L535			L33-0664-05	CHOKE COIL	
L536			L34-2354-05	COIL	
L537			L40-4795-48	SMALL FIXED INDUCTOR (4.7UH)	
L538			L33-0664-05	CHOKE COIL	
L539			L34-2354-05	COIL	
L540			L40-4795-48	SMALL FIXED INDUCTOR (4.7UH)	
L541			L33-0664-05	CHOKE COIL	
L542			L34-2354-05	COIL	
L543			L40-4795-48	SMALL FIXED INDUCTOR (4.7UH)	
L544			L33-0664-05	CHOKE COIL	
L545			L34-2354-05	COIL	
L546			L40-4795-48	SMALL FIXED INDUCTOR (4.7UH)	
L547			L40-3385-48	SMALL FIXED INDUCTOR (330NH)	
L548			L40-1295-48	SMALL FIXED INDUCTOR (1.2UH)	
L549			L40-3385-48	SMALL FIXED INDUCTOR (330NH)	
L550			L40-2285-48	SMALL FIXED INDUCTOR (220NH)	
L551			L40-1015-48	SMALL FIXED INDUCTOR (100NH)	
L552		*	L40-2795-48	SMALL FIXED INDUCTOR (2.7UH)	
L553			L40-1595-48	SMALL FIXED INDUCTOR (1.5UH)	
L554			L40-2295-48	SMALL FIXED INDUCTOR (2.2UH)	
L555			L40-3395-48	SMALL FIXED INDUCTOR (3.3UH)	
L556			L40-2285-48	SMALL FIXED INDUCTOR (220NH)	
L557-559			L40-1015-48	SMALL FIXED INDUCTOR (100UH)	
L580,581			L40-1005-48	SMALL FIXED INDUCTOR (10UH)	
L601			L40-3395-48	SMALL FIXED INDUCTOR (3.3UH)	
L603			L40-2785-48	SMALL FIXED INDUCTOR (270NH)	
L604			L40-1015-48	SMALL FIXED INDUCTOR (100UH)	
X800			L77-1521-15	CRYSTAL RESONATOR (20MHZ)	
XF1			L71-0401-05	CRYSTAL FILTER (73.05MHZ)	
XF2			L71-0235-05	CRYSTAL FILTER	
XF3	—		L71-0266-05	CRYSTAL FILTER (8830KHZ)	
Q	2F		N38-2640-46	PAN HEAD MACHINE SCREW	
CP500-505			R90-0721-05	MULTI-COMP 4.7K X 16	
R1			RD14BB2E470J	RD 47 J 1/4W	
R2			RD14BB2E151J	RD 150 J 1/4W	
R3			RK73FB2A101J	CHIP R 100 J 1/10W	
R5			RD14BB2E101J	RD 100 J 1/4W	
R7			RD14BB2E820J	RD 82 J 1/4W	
R9			RK73FB2A221J	CHIP R 220 J 1/10W	
R10			RK73FB2A181J	CHIP R 180 J 1/10W	
R11,12			RK73FB2A331J	CHIP R 330 J 1/10W	
R13			RK73FB2A470J	CHIP R 47 J 1/10W	

Ref. No.	Address	New parts	Parts No.	Description	Destination
R14			RK73FB2A222J	CHIP R 2.2K J 1/10W	
R18			RK73FB2A103J	CHIP R 10K J 1/10W	
R19			RK73FB2A330J	CHIP R 33 J 1/10W	
R20			RK73FB2A102J	CHIP R 1.0K J 1/10W	
R21,22			RK73FB2A330J	CHIP R 33 J 1/10W	
R23			RK73FB2A101J	CHIP R 100 J 1/10W	
R24			RK73FB2A222J	CHIP R 2.2K J 1/10W	
R25			RK73FB2A561J	CHIP R 560 J 1/10W	
R27			RK73FB2A181J	CHIP R 180 J 1/10W	
R28			RK73FB2A680J	CHIP R 68 J 1/10W	
R31			RK73FB2A103J	CHIP R 10K J 1/10W	
R44-55			RK73FB2A223J	CHIP R 22K J 1/10W	
R56			RK73FB2A121J	CHIP R 120 J 1/10W	
R58			RK73FB2A680J	CHIP R 68 J 1/10W	
R59,60			RK73FB2A560J	CHIP R 56 J 1/10W	
R61			RK73FB2A680J	CHIP R 68 J 1/10W	
R62			RK73FB2A220J	CHIP R 22 J 1/10W	
R63			RK73FB2A121J	CHIP R 120 J 1/10W	
R65			RK73FB2A220J	CHIP R 22 J 1/10W	
R66			RK73FB2A121J	CHIP R 120 J 1/10W	
R68			RK73FB2A220J	CHIP R 22 J 1/10W	
R69			RK73FB2A121J	CHIP R 120 J 1/10W	
R71			RK73FB2A220J	CHIP R 22 J 1/10W	
R72			RK73FB2A121J	CHIP R 120 J 1/10W	
R74			RK73FB2A220J	CHIP R 22 J 1/10W	
R75			RK73FB2A121J	CHIP R 120 J 1/10W	
R77			RK73FB2A220J	CHIP R 22 J 1/10W	
R78			RK73FB2A121J	CHIP R 120 J 1/10W	
R80			RK73FB2A220J	CHIP R 22 J 1/10W	
R81			RK73FB2A121J	CHIP R 120 J 1/10W	
R83			RK73FB2A220J	CHIP R 22 J 1/10W	
R84			RK73FB2A121J	CHIP R 120 J 1/10W	
R86			RK73FB2A220J	CHIP R 22 J 1/10W	
R87			RK73FB2A121J	CHIP R 120 J 1/10W	
R89			RK73FB2A220J	CHIP R 22 J 1/10W	
R90			RK73FB2A121J	CHIP R 120 J 1/10W	
R92			RK73FB2A151J	CHIP R 150 J 1/10W	
R93			RK73FB2A223J	CHIP R 22K J 1/10W	
R94			RK73FB2A104J	CHIP R 100K J 1/10W	
R95			RK73FB2A393J	CHIP R 39K J 1/10W	
R96,97			RK73FB2A330J	CHIP R 33 J 1/10W	
R98			RK73FB2A473J	CHIP R 47K J 1/10W	
R99			RK73FB2A151J	CHIP R 150 J 1/10W	
R100			RK73FB2A331J	CHIP R 330 J 1/10W	
R101			RK73FB2A221J	CHIP R 220 J 1/10W	
R102			RK73FB2A101J	CHIP R 100 J 1/10W	
R103			RK73FB2A473J	CHIP R 47K J 1/10W	
R104,105			RK73FB2A151J	CHIP R 150 J 1/10W	
R106			RK73FB2A152J	CHIP R 1.5K J 1/10W	
R107			RK73FB2A680J	CHIP R 68 J 1/10W	
R108			RK73FB2A220J	CHIP R 22 J 1/10W	
R109			RK73FB2A100J	CHIP R 10 J 1/10W	
R110			RK73FB2A151J	CHIP R 150 J 1/10W	
R111			RK73FB2A471J	CHIP R 470 J 1/10W	
R112			RK73FB2A102J	CHIP R 1.0K J 1/10W	
R113			RK73FB2A471J	CHIP R 470 J 1/10W	
R114			RK73FB2A562J	CHIP R 5.6K J 1/10W	
R115			RK73FB2A220J	CHIP R 22 J 1/10W	
R116			RK73FB2A150J	CHIP R 15 J 1/10W	

PARTS LSIT

RF UNIT (X44-3210-00)

Ref. No.	Address	New parts	Parts No.	Description			Destination
R117			RK73FB2A471J	CHIP R	470	J 1/10W	
R118			RK73FB2A680J	CHIP R	68	J 1/10W	
R119,120			RK73FB2A331J	CHIP R	330	J 1/10W	
R121			RK73FB2A102J	CHIP R	1.0K	J 1/10W	
R122,123			RK73FB2A100J	CHIP R	10	J 1/10W	
R124			RK73FB2A471J	CHIP R	470	J 1/10W	
R125,126			RK73FB2A100J	CHIP R	10	J 1/10W	
R127			RK73FB2A180J	CHIP R	18	J 1/10W	
R128			RK73FB2A331J	CHIP R	330	J 1/10W	
R130			RK73FB2A331J	CHIP R	330	J 1/10W	
R131			RK73FB2A101J	CHIP R	100	J 1/10W	
R132			RK73FB2A223J	CHIP R	22K	J 1/10W	
R133			RK73FB2A333J	CHIP R	33K	J 1/10W	
R134			RK73FB2A122J	CHIP R	1.2K	J 1/10W	
R139			RK73FB2A104J	CHIP R	100K	J 1/10W	
R140			RK73FB2A473J	CHIP R	47K	J 1/10W	
R142			RK73FB2A473J	CHIP R	47K	J 1/10W	
R143			RK73FB2A471J	CHIP R	470	J 1/10W	
R144			RK73FB2A221J	CHIP R	220	J 1/10W	
R145			RK73FB2A330J	CHIP R	33	J 1/10W	
R146			RK73FB2A471J	CHIP R	470	J 1/10W	
R147			RK73FB2A562J	CHIP R	5.6K	J 1/10W	
R148			RK73FB2A223J	CHIP R	22K	J 1/10W	
R150			RK73FB2A181J	CHIP R	180	J 1/10W	
R154			RK73FB2A471J	CHIP R	470	J 1/10W	
R156			RK73FB2A330J	CHIP R	33	J 1/10W	
R157			RK73FB2A182J	CHIP R	1.8K	J 1/10W	
R158			RK73FB2A330J	CHIP R	33	J 1/10W	
R159			RK73FB2A101J	CHIP R	100	J 1/10W	
R160,161			RK73FB2A222J	CHIP R	2.2K	J 1/10W	
R162			RK73FB2A101J	CHIP R	100	J 1/10W	
R163			RK73FB2A332J	CHIP R	3.3K	J 1/10W	
R164			RK73FB2A152J	CHIP R	1.5K	J 1/10W	
R165			RK73FB2A473J	CHIP R	47K	J 1/10W	
R166			RK73FB2A222J	CHIP R	2.2K	J 1/10W	
R167			RK73FB2A101J	CHIP R	100	J 1/10W	
R168			RK73FB2A393J	CHIP R	39K	J 1/10W	
R169			RK73FB2A102J	CHIP R	1.0K	J 1/10W	
R170			RK73FB2A223J	CHIP R	22K	J 1/10W	
R171,172			RK73FB2A101J	CHIP R	100	J 1/10W	
R173			RK73FB2A393J	CHIP R	39K	J 1/10W	
R174			RK73FB2A223J	CHIP R	22K	J 1/10W	
R175			RK73FB2A102J	CHIP R	1.0K	J 1/10W	
R176			RK73FB2A103J	CHIP R	10K	J 1/10W	
R177			RK73FB2A153J	CHIP R	15K	J 1/10W	
R178			RK73FB2A563J	CHIP R	56K	J 1/10W	
R179			RK73FB2A103J	CHIP R	10K	J 1/10W	
R180			RK73FB2A104J	CHIP R	100K	J 1/10W	
R181			RK73FB2A222J	CHIP R	2.2K	J 1/10W	
R182			RK73FB2A103J	CHIP R	10K	J 1/10W	
R183			RK73FB2A470J	CHIP R	47	J 1/10W	
R184			RK73FB2A121J	CHIP R	120	J 1/10W	
R185			RK73FB2A103J	CHIP R	10K	J 1/10W	
R186			RK73FB2A562J	CHIP R	5.6K	J 1/10W	
R188			RK73FB2A470J	CHIP R	47	J 1/10W	
R189			RK73FB2A152J	CHIP R	1.5K	J 1/10W	
R190			RK73FB2A103J	CHIP R	10K	J 1/10W	
R191			RK73FB2A151J	CHIP R	150	J 1/10W	
R192			RK73FB2A102J	CHIP R	1.0K	J 1/10W	

Ref. No.	Address	New parts	Parts No.	Description			Destination
R195,196			RK73FB2A330J	CHIP R	33	J 1/10W	
R197			RK73FB2A273J	CHIP R	27K	J 1/10W	
R198			RK73FB2A103J	CHIP R	10K	J 1/10W	
R199,200			RK73FB2A221J	CHIP R	220	J 1/10W	
R201			RK73FB2A473J	CHIP R	47K	J 1/10W	
R202,203			RK73FB2A680J	CHIP R	68	J 1/10W	
R204			RK73FB2A101J	CHIP R	100	J 1/10W	
R205,206			RK73FB2A471J	CHIP R	470	J 1/10W	
R207,208			RK73FB2A330J	CHIP R	33	J 1/10W	
R209			RK73FB2A471J	CHIP R	470	J 1/10W	
R210			RK73FB2A102J	CHIP R	1.0K	J 1/10W	
R211			RK73FB2A472J	CHIP R	4.7K	J 1/10W	
R212,213			RK73FB2A330J	CHIP R	33	J 1/10W	
R214			RK73FB2A103J	CHIP R	10K	J 1/10W	
R215			RK73FB2A823J	CHIP R	82K	J 1/10W	
R216			RK73FB2A681J	CHIP R	680	J 1/10W	
R217			RK73FB2A151J	CHIP R	150	J 1/10W	
R218			RK73FB2A332J	CHIP R	3.3K	J 1/10W	
R219			RK73FB2A103J	CHIP R	10K	J 1/10W	
R220			RK73FB2A101J	CHIP R	100	J 1/10W	
R221			RK73FB2A102J	CHIP R	1.0K	J 1/10W	
R222			RK73FB2A103J	CHIP R	10K	J 1/10W	
R223			RK73FB2A392J	CHIP R	3.9K	J 1/10W	
R224			RK73FB2A332J	CHIP R	3.3K	J 1/10W	
R225			RK73FB2A223J	CHIP R	22K	J 1/10W	
R226			RK73FB2A562J	CHIP R	5.6K	J 1/10W	
R229			RK73FB2A103J	CHIP R	10K	J 1/10W	
R230			RK73FB2A152J	CHIP R	1.5K	J 1/10W	
R231,232			RK73FB2A221J	CHIP R	220	J 1/10W	
R233			RK73FB2A152J	CHIP R	1.5K	J 1/10W	
R234			RK73FB2A101J	CHIP R	100	J 1/10W	
R235			RK73FB2A152J	CHIP R	1.5K	J 1/10W	
R236,237			RK73FB2A101J	CHIP R	100	J 1/10W	
R238			RK73FB2A152J	CHIP R	1.5K	J 1/10W	
R239			RK73FB2A101J	CHIP R	100	J 1/10W	
R240			RK73FB2A152J	CHIP R	1.5K	J 1/10W	
R241,242			RK73FB2A331J	CHIP R	330	J 1/10W	
R243			RK73FB2A152J	CHIP R	1.5K	J 1/10W	
R244			RK73FB2A101J	CHIP R	100	J 1/10W	
R245			RK73FB2A152J	CHIP R	1.5K	J 1/10W	
R246			RK73FB2A221J	CHIP R	220	J 1/10W	
R248			RK73FB2A822J	CHIP R	8.2K	J 1/10W	
R249			RK73FB2A222J	CHIP R	2.2K	J 1/10W	
R250			RK73FB2A103J	CHIP R	10K	J 1/10W	
R251			RK73FB2A153J	CHIP R	15K	J 1/10W	
R252			RK73FB2A102J	CHIP R	1.0K	J 1/10W	
R253			RK73FB2A472J	CHIP R	4.7K	J 1/10W	
R256			RK73FB2A472J	CHIP R	4.7K	J 1/10W	
R257			RK73FB2A101J	CHIP R	100	J 1/10W	
R258			RK73FB2A331J	CHIP R	330	J 1/10W	
R259			RK73FB2A104J	CHIP R	100K	J 1/10W	
R260			RK73FB2A102J	CHIP R	1.0K	J 1/10W	
R261			RK73FB2A331J	CHIP R	330	J 1/10W	
R262			RK73FB2A102J	CHIP R	1.0K	J 1/10W	
R263			RK73FB2A332J	CHIP R	3.3K	J 1/10W	
R264			RK73FB2A222J	CHIP R	2.2K	J 1/10W	
R265			RK73FB2A272J	CHIP R	2.7K	J 1/10W	
R266			RK73FB2A332J	CHIP R	3.3K	J 1/10W	
R267			RK73FB2A822J	CHIP R	8.2K	J 1/10W	

PARTS LIST

RF UNIT (X44-3210-00)

Ref. No.	Address	New parts	Parts No.	Description			Destination
R268			RK73FB2A273J	CHIP R	27K	J 1/10W	
R269			RK73FB2A103J	CHIP R	10K	J 1/10W	
R271			RK73FB2A224J	CHIP R	220K	J 1/10W	
R272			RK73FB2A104J	CHIP R	100K	J 1/10W	
R276			RK73FB2A474J	CHIP R	470K	J 1/10W	
R277			RK73FB2A103J	CHIP R	10K	J 1/10W	
R278			RK73FB2A224J	CHIP R	220K	J 1/10W	
R279			RK73FB2A473J	CHIP R	47K	J 1/10W	
R280			RK73FB2A223J	CHIP R	22K	J 1/10W	
R281			RK73FB2A222J	CHIP R	2.2K	J 1/10W	
R284			RK73FB2A224J	CHIP R	220K	J 1/10W	
R285			RK73FB2A103J	CHIP R	10K	J 1/10W	
R286			RK73FB2A101J	CHIP R	100	J 1/10W	
R287			RK73FB2A103J	CHIP R	10K	J 1/10W	
R288			RK73FB2A472J	CHIP R	4.7K	J 1/10W	
R289			RK73FB2A103J	CHIP R	10K	J 1/10W	
R290,291			RK73FB2A472J	CHIP R	4.7K	J 1/10W	
R292,293			RK73FB2A681J	CHIP R	680	J 1/10W	
R294-297			RK73FB2A224J	CHIP R	220K	J 1/10W	
R298			RK73FB2A472J	CHIP R	4.7K	J 1/10W	
R320			RK73FB2A472J	CHIP R	4.7K	J 1/10W	
R322,323			RK73FB2A223J	CHIP R	22K	J 1/10W	
R324			RK73FB2A101J	CHIP R	100	J 1/10W	
R325			RK73FB2A102J	CHIP R	1.0K	J 1/10W	
R329			RK73FB2A224J	CHIP R	220K	J 1/10W	
R330			RK73FB2A104J	CHIP R	100K	J 1/10W	
R331			RK73FB2A684J	CHIP R	680K	J 1/10W	
R332			RK73FB2A103J	CHIP R	10K	J 1/10W	
R333			RK73FB2A680J	CHIP R	68	J 1/10W	
R334			RK73FB2A391J	CHIP R	390	J 1/10W	
R335			RK73FB2A272J	CHIP R	2.7K	J 1/10W	
R336,337			RK73FB2A104J	CHIP R	100K	J 1/10W	
R338			RK73FB2A154J	CHIP R	150K	J 1/10W	
R339			RK73FB2A224J	CHIP R	220K	J 1/10W	
R340			RK73FB2A101J	CHIP R	100	J 1/10W	
R351-362			RK73FB2A103J	CHIP R	10K	J 1/10W	
R363			R92-0670-05	CHIP R	0 OHM		
R380			RK73FB2A682J	CHIP R	6.8K	J 1/10W	
R381			RK73FB2A183J	CHIP R	18K	J 1/10W	
R382			RK73FB2A181J	CHIP R	180	J 1/10W	
R383-385			R92-0670-05	CHIP R	0 OHM		
R386			RK73FB2A330J	CHIP R	33	J 1/10W	
R500			RK73FB2A103J	CHIP R	10K	J 1/10W	
R501			RK73FB2A470J	CHIP R	47	J 1/10W	
R502			RK73FB2A331J	CHIP R	330	J 1/10W	
R503			RK73FB2A472J	CHIP R	4.7K	J 1/10W	
R504			RK73FB2A681J	CHIP R	680	J 1/10W	
R505			RK73FB2A561J	CHIP R	560	J 1/10W	
R506			RK73FB2A333J	CHIP R	33K	J 1/10W	
R507			RK73FB2A101J	CHIP R	100	J 1/10W	
R508			RK73FB2A272J	CHIP R	2.7K	J 1/10W	
R509			RK73FB2A681J	CHIP R	680	J 1/10W	
R510			RK73FB2A470J	CHIP R	47	J 1/10W	
R511			RK73FB2A122J	CHIP R	1.2K	J 1/10W	
R512			RK73FB2A472J	CHIP R	4.7K	J 1/10W	
R513			RK73FB2A103J	CHIP R	10K	J 1/10W	
R514			RK73FB2A220J	CHIP R	22	J 1/10W	
R515			RK73FB2A331J	CHIP R	330	J 1/10W	
R516			RK73FB2A560J	CHIP R	56	J 1/10W	

Ref. No.	Address	New parts	Parts No.	Description			Destination
R517-519			RK73FB2A470J	CHIP R	47	J 1/10W	
R520			RK73FB2A101J	CHIP R	100	J 1/10W	
R521			RK73FB2A223J	CHIP R	22K	J 1/10W	
R522			RK73FB2A331J	CHIP R	330	J 1/10W	
R523			RK73FB2A470J	CHIP R	47	J 1/10W	
R524,525			RK73FB2A102J	CHIP R	1.0K	J 1/10W	
R526			RK73FB2A331J	CHIP R	330	J 1/10W	
R527			RK73FB2A680J	CHIP R	68	J 1/10W	
R528			RK73FB2A391J	CHIP R	390	J 1/10W	
R529			RK73FB2A680J	CHIP R	68	J 1/10W	
R530			RK73FB2A103J	CHIP R	10K	J 1/10W	
R531			RK73FB2A222J	CHIP R	2.2K	J 1/10W	
R532			RK73FB2A151J	CHIP R	150	J 1/10W	
R533			RK73FB2A680J	CHIP R	68	J 1/10W	
R534			RK73FB2A101J	CHIP R	100	J 1/10W	
R535			RK73FB2A471J	CHIP R	470	J 1/10W	
R536			RK73FB2A470J	CHIP R	47	J 1/10W	
R537			RK73FB2A220J	CHIP R	22	J 1/10W	
R545			RK73FB2A103J	CHIP R	10K	J 1/10W	
R546			RK73FB2A821J	CHIP R	820	J 1/10W	
R547			RK73FB2A331J	CHIP R	330	J 1/10W	
R548,549			RK73FB2A470J	CHIP R	47	J 1/10W	
R550			RK73FB2A181J	CHIP R	180	J 1/10W	
R551			RK73FB2A221J	CHIP R	220	J 1/10W	
R552			RK73FB2A101J	CHIP R	100	J 1/10W	
R553			RK73FB2A333J	CHIP R	33K	J 1/10W	
R554			RK73FB2A682J	CHIP R	6.8K	J 1/10W	
R555,556			RK73FB2A101J	CHIP R	100	J 1/10W	
R557			RK73FB2A221J	CHIP R	220	J 1/10W	
R558			RK73FB2A101J	CHIP R	100	J 1/10W	
R559,560			RK73FB2A473J	CHIP R	47K	J 1/10W	
R561,562			RK73FB2A101J	CHIP R	100	J 1/10W	
R563			RK73FB2A102J	CHIP R	1.0K	J 1/10W	
R564			RK73FB2A681J	CHIP R	680	J 1/10W	
R565			RK73FB2A101J	CHIP R	100	J 1/10W	
R566			RK73FB2A471J	CHIP R	470	J 1/10W	
R567			RK73FB2A221J	CHIP R	220	J 1/10W	
R570,571			RK73FB2A222J	CHIP R	2.2K	J 1/10W	
R572			RK73FB2A272J	CHIP R	2.7K	J 1/10W	
R580-583			RK73FB2A223J	CHIP R	22K	J 1/10W	
R584			RK73FB2A101J	CHIP R	100	J 1/10W	
R586			RK73FB2A682J	CHIP R	6.8K	J 1/10W	
R587			RK73FB2A473J	CHIP R	47K	J 1/10W	
R588,589			RK73FB2A101J	CHIP R	100	J 1/10W	
R591			RK73FB2A682J	CHIP R	6.8K	J 1/10W	
R592			RK73FB2A473J	CHIP R	47K	J 1/10W	
R593,594			RK73FB2A101J	CHIP R	100	J 1/10W	
R596			RK73FB2A682J	CHIP R	6.8K	J 1/10W	
R597			RK73FB2A473J	CHIP R	47K	J 1/10W	
R598,599			RK73FB2A101J	CHIP R	100	J 1/10W	
R601			RK73FB2A682J	CHIP R	6.8K	J 1/10W	
R602			RK73FB2A473J	CHIP R	47K	J 1/10W	
R603			RK73FB2A101J	CHIP R	100	J 1/10W	
R604			RK73FB2A470J	CHIP R	47	J 1/10W	
R605			RK73FB2A392J	CHIP R	3.9K	J 1/10W	
R606			RK73FB2A103J	CHIP R	10K	J 1/10W	
R608			RK73FB2A471J	CHIP R	470	J 1/10W	
R609,610			RK73FB2A103J	CHIP R	10K	J 1/10W	
R611			RK73FB2A102J	CHIP R	1.0K	J 1/10W	

PARTS LSIT

RF UNIT (X44-3210-00)

Ref. No.	Address	New parts	Parts No.	Description	Destination
R612			RK73FB2A821J	CHIP R 820 J 1/10W	
R613			RK73FB2A271J	CHIP R 270 J 1/10W	
R614			RK73FB2A101J	CHIP R 100 J 1/10W	
R615			RK73FB2A220J	CHIP R 22 J 1/10W	
R616			RK73FB2A470J	CHIP R 47 J 1/10W	
R617			RK73FB2A392J	CHIP R 3.9K J 1/10W	
R618			RK73FB2A103J	CHIP R 10K J 1/10W	
R619			RK73FB2A220J	CHIP R 22 J 1/10W	
R620			RK73FB2A471J	CHIP R 470 J 1/10W	
R621			RK73FB2A183J	CHIP R 18K J 1/10W	
R622			RK73FB2A122J	CHIP R 1.2K J 1/10W	
R623			RK73FB2A102J	CHIP R 1.0K J 1/10W	
R624			RK73FB2A334J	CHIP R 330K J 1/10W	
R625			RK73FB2A182J	CHIP R 1.8K J 1/10W	
R626			RK73FB2A331J	CHIP R 330 J 1/10W	
R627			RK73FB2A102J	CHIP R 1.0K J 1/10W	
R628			RK73FB2A101J	CHIP R 100 J 1/10W	
R629			RK73FB2A821J	CHIP R 820 J 1/10W	
R630			RK73FB2A822J	CHIP R 8.2K J 1/10W	
R631			RK73FB2A103J	CHIP R 10K J 1/10W	
R632			RK73FB2A102J	CHIP R 1.0K J 1/10W	
R633			RK73FB2A181J	CHIP R 180 J 1/10W	
R634			RK73FB2A331J	CHIP R 330 J 1/10W	
R635			RK73FB2A823J	CHIP R 82K J 1/10W	
R636			RK73FB2A333J	CHIP R 33K J 1/10W	
R637			RK73FB2A101J	CHIP R 100 J 1/10W	
R638			RK73FB2A470J	CHIP R 47 J 1/10W	
R639			RK73FB2A682J	CHIP R 6.8K J 1/10W	
R640			RK73FB2A102J	CHIP R 1.0K J 1/10W	
R641			RK73FB2A151J	CHIP R 150 J 1/10W	
R642			RK73FB2A150J	CHIP R 15 J 1/10W	
R643			RK73FB2A471J	CHIP R 470 J 1/10W	
R644			RK73FB2A103J	CHIP R 10K J 1/10W	
R645			RK73FB2A392J	CHIP R 3.9K J 1/10W	
R646			RK73FB2A822J	CHIP R 8.2K J 1/10W	
R647			RK73FB2A102J	CHIP R 1.0K J 1/10W	
R648			RK73FB2A684J	CHIP R 680K J 1/10W	
R649			RK73FB2A182J	CHIP R 1.8K J 1/10W	
R650			RK73FB2A103J	CHIP R 10K J 1/10W	
R651			RK73FB2A472J	CHIP R 4.7K J 1/10W	
R652			RK73FB2A103J	CHIP R 10K J 1/10W	
R653			RK73FB2A104J	CHIP R 100K J 1/10W	
R655-656			RK73FB2A103J	CHIP R 10K J 1/10W	
R657			RK73FB2A471J	CHIP R 470 J 1/10W	
R658			RK73FB2A101J	CHIP R 100 J 1/10W	
R659			RK73FB2A470J	CHIP R 47 J 1/10W	
R690-697			RK73FB2A221J	CHIP R 220 J 1/10W	
R699			RK73FB2A102J	CHIP R 1.0K J 1/10W	
R710-712			RK73FB2A103J	CHIP R 10K J 1/10W	
R800			RK73FB2A223J	CHIP R 22K J 1/10W	
R801			RK73FB2A103J	CHIP R 10K J 1/10W	
R802			RK73FB2A222J	CHIP R 2.2K J 1/10W	
R803			RK73FB2A271J	CHIP R 270 J 1/10W	
R804			RK73FB2A101J	CHIP R 100 J 1/10W	
R901-902			RK73FB2A101J	CHIP R 100 J 1/10W	
R903-906			RK73FB2A101J	CHIP R 100 J 1/10W	
R908-920			RK73FB2A101J	CHIP R 100 J 1/10W	
R925-928			RK73EB2B221J	CHIP R 220 J 1/8W	
VR2			R12-6417-05	TRIMMING POT 1K	

Ref. No.	Address	New parts	Parts No.	Description	Destination
VR3			R12-6427-05	TRIMMING POT. 47K	
VR901-904		*	R31-0605-05	VARIABLE RESISTOR 100K	
VR905,906		*	R31-0606-05	VARIABLE RESISTOR 10K	
K1-3			S51-1428-05	RELAY	
K4			S51-1420-05	RELAY	
S800			S31-2420-05	SLIDE SWITCH	
D1-3			LFB01	DIODE	
D4-7			RLS245	DIODE	
D8			1SV128	DIODE	
D10			LFB01	DIODE	
D11			1SV128	DIODE	
D12			RLS135	DIODE	
D13			1SV128	DIODE	
D14			RLS135	DIODE	
D15			1SV128	DIODE	
D16			RLS135	DIODE	
D17			1SV128	DIODE	
D18			RLS135	DIODE	
D19			1SV128	DIODE	
D20			RLS135	DIODE	
D21			1SV128	DIODE	
D22			RLS135	DIODE	
D23			1SV128	DIODE	
D24			RLS135	DIODE	
D25			1SV128	DIODE	
D26			RLS135	DIODE	
D27			1SV128	DIODE	
D28			RLS135	DIODE	
D29			1SV128	DIODE	
D30			RLS135	DIODE	
D31			1SV128	DIODE	
D32			RLS135	DIODE	
D33			1SV128	DIODE	
D35			RLS135	DIODE	
D36			1SV128	DIODE	
D37			RLS135	DIODE	
D38,39			1SV128	DIODE	
D40			RLS135	DIODE	
D41			1SV128	DIODE	
D42,43			DAN235K	DIODE	
D46			HSM88ASR	DIODE	
D47			LFB01	DIODE	
D49			1SV172	DIODE	
D50			RD6.2M(B1)	ZENER DIODE	
D51			B30-2004-05	LED	
D52			RD12M(B2)	ZENER DIODE	
D53,54			1SS355	DIODE	
D55			RD3.0M(B2)	ZENER DIODE	
D56			1SS355	DIODE	
D57			B30-2004-05	LED	
D58			LFB01	DIODE	
D59			1SS355	DIODE	
D60,61			DAN202K	DIODE	
D62-69			1SV128	DIODE	
D70			RD6.2M(B1)	ZENER DIODE	
D71			RD4.7M(B2)	ZENER DIODE	
D72			1SS355	DIODE	
D500			1SV166	DIODE	

PARTS LIST

RF UNIT (X44-3210-00)
FINAL UNIT (X45-351X-XX)

Ref. No.	Address	New parts	Parts No.	Description	Destination
D501			RLS73	DIODE	
D502			1SV166	DIODE	
D503			RLS73	DIODE	
D504			1SV166	DIODE	
D505			RLS73	DIODE	
D506			1SV166	DIODE	
D507			RLS73	DIODE	
D508			1SS181	DIODE	
IC1,2			TC9174F	IC (CMOS I/O EXTENSION)	
IC6			NJM2904M	IC (OP AMP X2)	
IC7			M62363FP	IC (8bit D/A CONVERTER)	
IC8			NJM2902M	IC (OP AMP X4)	
IC9			NJM2903M	IC (COMPARATOR X2)	
IC10			NJM78L05UA	IC (VOLTAGE REGULATOR/ +5V)	
IC500-502			F71022	IC (DDS)	
IC503			UPD74HC390G	IC (DUAL DECADE COUNTER)	
IC505,506			SN16913P	IC (DUBLE BALANCED MIXERS)	
IC507			MB86001PF	IC	
IC508			SN76514N	IC (MIXER)	
IC509			MB86001PF	IC	
IC510			TA78L09F	IC (VOLTAGE REGULATOR/ +9V)	
IC511		*	TA78DS09F	IC	
PL1,2		*	B30-2134-05	LAMP	
Q1			DTA124EK	DIGITAL TRANSISTOR	
Q2			DTC124EK	DIGITAL TRANSISTOR	
Q3			FMA1	TRANSISTOR	
Q5			2SC2954	TRANSISTOR	
Q6			2SC2712(Y)	TRANSISTOR	
Q7-12			FMG4	TRANSISTOR	
Q13			3SK131(M)	FET	
Q14,15		*	2SK2218(5)	FET	
Q16			2SC2954	TRANSISTOR	
Q17-20			2SK520(K44)	FET	
Q21			2SD1624(S)	TRANSISTOR	
Q22			2SC2714(Y)	TRANSISTOR	
Q23,24			3SK131(M)	FET	
Q26,27			2SK520(K43)	FET	
Q28-32			2SC2712(Y)	TRANSISTOR	
Q33			3SK131(M)	FET	
Q35,36			3SK184(R)	FET	
Q37-39			3SK131(M)	FET	
Q42			DTC124EK	DIGITAL TRANSISTOR	
Q43,44			2SC2712(Y)	TRANSISTOR	
Q45,46			DTC143TK	DIGITAL TRANSISTOR	
Q47			2SC2712(Y)	TRANSISTOR	
Q48			DTA124EK	DIGITAL TRANSISTOR	
Q49			2SC2712(Y)	TRANSISTOR	
Q50			2SK208(Y)	FET	
Q51			DTC124EK	DIGITAL TRANSISTOR	
Q52			2SC2712(Y)	TRANSISTOR	
Q54			2SC2712(Y)	TRANSISTOR	
Q55			2SB1188(Q,R)	TRANSISTOR	
Q56			DTC124EK	DIGITAL TRANSISTOR	
Q57,58			2SB1188(Q,R)	TRANSISTOR	
Q59,60			DTC143EK	DIGITAL TRANSISTOR	
Q61			FMC3	TRANSISTOR	
Q62			DTA143EK	DIGITAL TRANSISTOR	
Q63			FMC3	TRANSISTOR	
Q64			DTA143EK	DIGITAL TRANSISTOR	

Ref. No.	Address	New parts	Parts No.	Description	Destination
Q65			2SA1162(Y)	TRANSISTOR	
Q66			DTC114EK	DIGITAL TRANSISTOR	
Q70			DTC114EK	DIGITAL TRANSISTOR	
Q71			DTA114EK	DIGITAL TRANSISTOR	
Q500-503			2SC2712(Y)	TRANSISTOR	
Q504,505			2SK508NV(K53)	FET	
Q506-508			2SC2712(Y)	TRANSISTOR	
Q510,511			2SC2712(Y)	TRANSISTOR	
Q512-514			2SC2714(Y)	TRANSISTOR	
Q515			2SC2712(Y)	TRANSISTOR	
Q516-519			DTC114EK	DIGITAL TRANSISTOR	
Q520-523			2SK508NV(K53)	FET	
Q524,525			2SC2714(Y)	TRANSISTOR	
Q526			2SC2996(Y,O)	TRANSISTOR	
Q527-529			2SC3722K(R)	TRANSISTOR	
Q530			2SC2712(Y)	TRANSISTOR	
Q531			2SC2714(Y)	TRANSISTOR	
Q532			2SC2954	TRANSISTOR	
Q533			DTA124EK	DIGITAL TRANSISTOR	
Q534-536			2SC3722K(R)	TRANSISTOR	
Q537			2SD1757K	TRANSISTOR	
Q539			2SC2714(Y)	TRANSISTOR	
Q800			2SC2714(Y)	TRANSISTOR	
TH1			157-101-53019	THERMISTOR 100	
TH2			157-302-53008	THERMISTOR 3K	
TH3			157-101-53019	THERMISTOR 100	
TH4			157-302-53008	THERMISTOR 3K	
S901,902			W02-1687-15	ENCODER (FILTER)	
S903		*	W02-1861-05	ENCODER (RIT/XIT)	
S904			W02-1660-15	ENCODER (M.CH/VFO.CH)	
A501	2F		X58-3390-03	SUB UNIT (VCO2)	

FINAL UNIT (X45-351X-XX) 0-00 : K,P,M,M2,X 2-71 : E,E2,E3,E9

C1			CK73FF1H473Z	CHIP C	0.047UF	Z
C2			CC73FCH1H101J	CHIP C	100PF	J
C3			CC45FCH2H030C	CERAMIC	3.0PF	C
C4			CC73FCH1H560J	CHIP C	56PF	J
C5			CK73FF1H473Z	CHIP C	0.047UF	Z
C6			CE04EW1H010M	ELECTRO	1.0UF	50WV
C7			CK73FB1H103K	CHIP C	0.010UF	K
C8-18			CK73FB1H102K	CHIP C	1000PF	K
C19-33			CK73FB1H103K	CHIP C	0.010UF	K
C101			CM93D2H102J	MICA	1000PF	J
C102			CC45FSL2H331J	CERAMIC	330PF	J
C103			CC45FSL2H271J	CERAMIC	270PF	J
C104,105			CM93D2H102J	MICA	1000PF	J
C106			CC45FSL2H151J	CERAMIC	150PF	J
C107			CM93D2H222J	MICA	2200PF	J
C108		*	CC45FSL2H181J	CERAMIC	180PF	J
C109			CC45FSL2H101J	CERAMIC	100PF	J
C110			CM93D2H102J	MICA	1000PF	J
C111			CM93D2H561J	MICA	560PF	J
C112			CC45FSL2H471J	CERAMIC	470PF	J
C113,114		*	CC45FSL2H181J	CERAMIC	180PF	J
C115			CC45FSL2H391J	CERAMIC	390PF	J
C116			CC45FSL2H471J	CERAMIC	470PF	J

PARTS LSIT

FINAL UNIT (X45-351X-XX)

Ref. No.	Address	New parts	Parts No.	Description			Destination
C117			CC45FSL2H271J	CERAMIC	270PF	J	
C118			CC45FSL2H391J	CERAMIC	390PF	J	
C119			CC45FSL2H471J	CERAMIC	470PF	J	
C120		*	CC45FSL2H181J	CERAMIC	180PF	J	
C121			CC45FSL2H331J	CERAMIC	330PF	J	
C122			CC45FSL2H820J	CERAMIC	82PF	J	
C123			CC45FSL2H331J	CERAMIC	330PF	J	
C124			CC45FSL2H121J	CERAMIC	120PF	J	
C125			CC45FSL2H270J	CERAMIC	27PF	J	
C126			CC45FSL2H151J	CERAMIC	150PF	J	
C127			CC45FSL2H471J	CERAMIC	470PF	J	
C128			CC45FSL2H270J	CERAMIC	27PF	J	
C129			CC45FSL2H220J	CERAMIC	22PF	J	
C130			CC45FSL2H331J	CERAMIC	330PF	J	
C131			CC45FSL2H471J	CERAMIC	470PF	J	
C132			CC45FSL2H680J	CERAMIC	68PF	J	
C133			CC45FSL2H560J	CERAMIC	56PF	J	
C134			CC45FSL2H151J	CERAMIC	150PF	J	
C135			CC45FSL2H471J	CERAMIC	470PF	J	
C136			CC45FSL2H560J	CERAMIC	56PF	J	
C137			CC45FSL2H151J	CERAMIC	150PF	J	
C138			CC45FSL2H331J	CERAMIC	330PF	J	
C139			CC45FSL2H330J	CERAMIC	33PF	J	
C140,141			CC45FSL2H221J	CERAMIC	220PF	J	
142			CC45FSL2H101J	CERAMIC	100PF	J	
C143,144			CC45FSL2H151J	CERAMIC	150PF	J	
C145			CC45FSL2H120J	CERAMIC	12PF	J	
C146			CC45FSL2H271J	CERAMIC	270PF	J	
C147			CC45FSL2H390J	CERAMIC	39PF	J	
C148,149			CC45FSL2H820J	CERAMIC	82PF	J	
C150			CC45FSL2H100D	CERAMIC	10PF	D	
C151			CC45FSL2H121J	CERAMIC	120PF	J	
C152			CC45FSL2H470J	CERAMIC	47PF	J	
C153			CC45FSL2H330J	CERAMIC	33PF	J	
C154			CC45FSL2H820J	CERAMIC	82PF	J	
C161			CC45FSL2H100D	CERAMIC	10PF	D	
C162		*	CC45FSL2H090D	CERAMIC	9.0PF	D	
C163			CC45FSL2H270J	CERAMIC	27PF	J	
C301,302			CK73FB1H103K	CHIP C	0.010UF	K	
C304			CC73FCH1H101J	CHIP C	100PF	J	
C305			CC73FCH1H181J	CHIP C	180PF	J	
C306			CC73FCH1H390J	CHIP C	39PF	J	
C401			CE04EW1C470M	ELECTRO	47UF	16WV	
C402			CE04EW1C100M	ELECTRO	10UF	16WV	
C405			CE04EW1E470M	ELECTRO	47UF	25WV	
C406,407			CK73FB1E104K	CHIP C	0.10UF	K	
C408			CE04EW1E470M	ELECTRO	47UF	25WV	
C409			CK73FB1E104K	CHIP C	0.10UF	K	
C410			CE04EW1C470M	ELECTRO	47UF	16WV	
C411			CK73FB1H103K	CHIP C	0.010UF	K	
C412,413			CK73FB1H222K	CHIP C	2200PF	K	
C414			CE04EW1C330M	ELECTRO	33UF	16WV	
C415,416			CE04EW1C101M	ELECTRO	100UF	16WV	
C417			CK73FB1H103K	CHIP C	0.010UF	K	
C418-420			CK73FB1H102K	CHIP C	1000PF	K	
C421			CK73FB1H103K	CHIP C	0.010UF	K	
C422			CE04EW1E470M	ELECTRO	47UF	25WV	
C431-433			CK73FB1H103K	CHIP C	0.010UF	K	
C435			CK73FB1E104K	CHIP C	0.10UF	K	

Ref. No.	Address	New parts	Parts No.	Description			Destination
C436			CK73FB1H102K	CHIP C	1000PF	K	
C437			CK73FB1H103K	CHIP C	0.010UF	K	
C438			CE04EW1H010M	ELECTRO	1.0UF	50WV	
C439			CK73FB1H103K	CHIP C	0.010UF	K	
C450			CK73FB1H103K	CHIP C	0.010UF	K	
C452-454			CK73FB1H103K	CHIP C	0.010UF	K	
C455			CK73FB1H102K	CHIP C	1000PF	K	
C456-458			CK73FB1H103K	CHIP C	0.010UF	K	
C461			CC73FSL1H221J	CHIP C	220PF	J	
C465			CK73FB1E104K	CHIP C	0.10UF	K	
C466-471			CK73FF1C105Z	CHIP C	1.0UF	Z	
C472,473			CK73FB1E104K	CHIP C	0.10UF	K	
C479			CE04EW1H010M	ELECTRO	1.0UF	50WV	
C480-485			CK73FB1H103K	CHIP C	0.010UF	K	
C486-488			CK73FB1E104K	CHIP C	0.10UF	K	
C489			CC73FCH1H470J	CHIP C	47PF	J	
C490,491			CK73FB1H103K	CHIP C	0.010UF	K	
C492			CK73FB1E104K	CHIP C	0.10UF	K	
C493			CK73FB1H103K	CHIP C	0.010UF	K	
C494-496			CK73FB1E104K	CHIP C	0.10UF	K	
C497-499			CK73FB1H103K	CHIP C	0.010UF	K	
C502			CK73FB1E473K	CHIP C	0.047UF	K	
C503			CK73FB1H102K	CHIP C	1000PF	K	
C504,505			CK73FB1E473K	CHIP C	0.047UF	K	
C506			CK73FB1E223K	CHIP C	0.022UF	K	
C507			CK73FB1H681K	CHIP C	680PF	K	
C508,509			CK73FB1E473K	CHIP C	0.047UF	K	
C510,511			CK73FB1E223K	CHIP C	0.022UF	K	
C512			CE04EW1C100M	ELECTRO	10UF	16WV	
C513			CC45FSL2H151J	CERAMIC	150PF	J	
C514,515			CK73FB1E223K	CHIP C	0.022UF	K	
C516			CE04EW1E101M	ELECTRO	100UF	25WV	
C517			CM93D2H681J	MICA	680PF	J	
C518,519			C91-1004-05	CHIP C	6800PF	J	
C520			CK73FB1H102K	CHIP C	1000PF	K	
C521			CK73FB1E473K	CHIP C	0.047UF	K	
C522			CE04EW1C100M	ELECTRO	10UF	16WV	
C523			CK73FB1E223K	CHIP C	0.022UF	K	
C524			CE04EW1E470M	ELECTRO	47UF	25WV	
C525			CM73F2H122J	CHIP C	1200PF	J	
C526			CC45FSL2H151J	CERAMIC	150PF	J	
C527			CE04EW1E101M	ELECTRO	100UF	25WV	
C528,529			CK73FB1E104K	CHIP C	0.10UF	K	
C533			CM73F2H561J	CHIP C	560PF	J	
C550			CK73FB1E104K	CHIP C	0.10UF	K	
C551			CK73FB1H103K	CHIP C	0.010UF	K	
C552,553			CK73FB1H102K	CHIP C	1000PF	K	
C554			CK73FB1H223K	CHIP C	0.022UF	K	
C557			CK73FB1H102K	CHIP C	1000PF	K	
C558			CK73FB1H103K	CHIP C	0.010UF	K	
C559			CK73FB1E104K	CHIP C	0.10UF	K	
C560-563		*	C91-1171-05	HV C	0.01UF	1KWV	
C601			CK73FB1H103K	CHIP C	0.010UF	K	
C602			CE04EW1E102M	ELECTRO	1000UF	25WV	
C603			CK73FB1H103K	CHIP C	0.010UF	K	
C605,606			CK73FB1H103K	CHIP C	0.010UF	K	
C608,609			CK73FB1E104K	CHIP C	0.10UF	K	
C610,611			CK73FB1E473K	CHIP C	0.047UF	K	
C612,613			CE04EW1E470M	ELECTRO	47UF	25WV	

PARTS LIST

FINAL UNIT (X45-351X-XX)

Ref. No.	Address	New parts	Parts No.	Description	Destination
C614			CE04EW1E102M	ELECTRO 1000UF 25WV	
C620			CK73FF1E104Z	CHIP C 0.10UF Z	
C621,622			CE04EW1E470M	ELECTRO 47UF 25WV	
C623			CK73FF1E104Z	CHIP C 0.10UF Z	
C701-711			CK73FB1H103K	CHIP C 0.010UF K	
C712			CE04EW1C471M	ELECTRO 470UF 16WV	
C713			CK73FB1E103K	CHIP C 0.010UF K	
C901			CK73FB1H103K	CHIP C 0.010UF K	
C903			CE04EW1H2R2M	ELECTRO 2.2UF 50WV	
TC1			C05-0030-15	TRIMMER CAPACITOR 20PF	
CN1,2			E04-0191-05	RF COAXIAL CABLE SOCKET	
CN3			E40-5469-05	FLAT CABLE CONNECTOR (12P)	
CN4			E40-5068-05	PIN CONNECTOR (11P)	
CN5			E23-0996-05	TERMINAL (TEST)	
CN301			E40-3238-05	PIN CONNECTOR (3P)	
CN302-305			E04-0191-05	RF COAXIAL CABLE SOCKET	
CN306,307			E23-0996-05	TERMINAL (TEST)	
CN401			E23-5745-05	FLAT CABLE CONNECTOR (20P)	
CN402			E40-5469-05	FLAT CABLE CONNECTOR (12P)	
CN403			E40-3242-05	PIN CONNECTOR (7P)	
CN404			E40-3237-05	PIN CONNECTOR (2P)	
CN405			E40-3239-05	PIN CONNECTOR (4P)	
CN406			E40-5470-05	FLAT CABLE CONNECTOR (13P)	
CN407			E40-3240-05	PIN CONNECTOR (5P)	
CN410			E04-0154-05	RF COAXIAL CABLE SOCKET	
CN411			E40-3239-05	PIN CONNECTOR (4P)	
CN412			E04-0154-05	RF COAXIAL CABLE SOCKET	
CN413			E40-3238-05	PIN CONNECTOR (3P)	
CN501,502			E04-0191-05	RF COAXIAL CABLE SOCKET	
CN503			E40-3240-05	PIN CONNECTOR (5P)	
CN504			E40-3238-05	PIN CONNECTOR (3P)	
CN505-507			E23-0996-05	TERMINAL (TEST)	
CN601			E40-3238-05	PIN CONNECTOR (3P)	
CN602			E40-3239-05	PIN CONNECTOR (4P)	
CN603			E40-5470-05	FLAT CABLE CONNECTOR (13P)	
CN604			E40-3240-05	PIN CONNECTOR (5P)	
CN605			E40-3237-05	PIN CONNECTOR (2P)	
W1	1J,2K	*	E37-0539-05	LEAD WIRE WITH CONNECTOR	
W501	1J,2J	*	E37-0525-05	LEAD WIRE WITH TERMINALR	
W502	2J		E37-0067-05	LEAD WIRE WITH MINIPIN PLUG	
202	2G		F29-0014-05	INSULATING BUSH	
F401			F06-4029-05	FUSE (4A 250V) : C/5	
F601			F53-0093-05	FUSE (5A 125V) : D/5	
A401,402			J13-0075-05	FUSE CLIP : C/5	
CF451			L72-0319-05	CERAMIC FILTER (455KHZ)	
CF452	—		L72-0333-05	CERAMIC FILTER (455KHZ)	
CF453			L72-0366-05	CERAMIC FILTER (455KHZ)	
L1			L40-2221-33	SMALL FIXED INDUCTOR	
L2			L39-0480-15	TROIDAL COIL	
L3			L40-2221-33	SMALL FIXED INDUCTOR	
L4-10			L40-1015-48	SMALL FIXED INDUCTOR (100UH)	
L101			L39-0491-05	TROIDAL COIL (CORE : L92-0107-05)	
L102			L39-0492-05	TROIDAL COIL (CORE : L92-0107-05)	
L103			L39-0493-05	TROIDAL COIL (CORE : L92-0107-05)	
L104			L39-1223-05	TROIDAL COIL (CORE : L92-0107-05)	
L105			L39-1224-05	TROIDAL COIL (CORE : L92-0107-05)	
L106			L39-1225-05	TROIDAL COIL (CORE : L92-0107-05)	
L107			L39-1222-05	TROIDAL COIL (CORE : L92-0107-05)	

Ref. No.	Address	New parts	Parts No.	Description	Destination
L108			L39-1223-05	TROIDAL COIL (CORE : L92-0107-05)	
L109,110			L39-1221-05	TROIDAL COIL (CORE . L92-0108-05)	
L111			L34-1279-05	COIL	
L112			L34-1281-05	COIL	
L113			L34-1279-05	COIL	
L114			L34-1280-05	COIL	
L115			L34-1281-05	COIL	
L116			L34-1282-05	COIL	
L301,302			L40-1015-48	SMALL FIXED INDUCTOR (100UH)	
L303,304			L34-1035-05	COIL	
L401			L40-1015-48	SMALL FIXED INDUCTOR (100UH)	
L450			L40-2215-48	SMALL FIXED INDUCTOR (220UH)	
L451			L34-0943-05	COIL	
L452			L34-4255-05	COIL	
L453		*	L40-4711-15	SMALL FIXED INDUCTOR	
L454			L40-2221-33	SMALL FIXED INDUCTOR	
L455,456			L34-4254-05	COIL	
L457,458			L34-4255-05	COIL	
L460			L40-3395-48	SMALL FIXED INDUCTOR (3.3UH)	
L461-465			L40-1092-12	SMALL FIXED INDUCTOR	
L466			L40-1592-15	SMALL FIXED INDUCTOR	
L501		*	L40-1505-48	SMALL FIXED INDUCTOR (15UH)	
L502			L40-3395-48	SMALL FIXED INDUCTOR (3.3UH)	
L503			L39-0481-05	TROIDAL COIL	
L504			L33-0617-15	CHOKE COIL	
L505,506			L33-0699-05	CHOKE COIL	
L507			L39-1257-05	TROIDAL COIL	
L508,509			L33-0617-15	CHOKE COIL	
L510			L39-0482-05	TROIDAL COIL	
L511			L33-0651-05	CHOKE COIL	
L512			L33-0617-15	CHOKE COIL	
L513			L39-1209-25	TROIDAL COIL	
L514		*	L40-1505-48	SMALL FIXED INDUCTOR (15UH)	
L515,516		*	L92-0150-05	TROIDAL CORE (W501)	
L520			L40-3985-48	SMALL FIXED INDUCTOR (390NH)	
L601			L40-1005-48	SMALL FIXED INDUCTOR (10UH)	
L602			L40-1092-12	SMALL FIXED INDUCTOR	
R	2G,2H		N67-3010-46	PAN HEAD SEMS SCREW	
K	2G,2H		N87-3006-46	BRAZIER HEAD TAPTITE SCREW	
R1			RK73FB2A100J	CHIP R 10 J 1/10W	
R2-5			RK73FB2A330J	CHIP R 33 J 1/10W	
R6-9			RK73FB2A270J	CHIP R 27 J 1/10W	
R10			RK73FB2A181J	CHIP R 180 J 1/10W	
R11-13			RK73FB2A101J	CHIP R 100 J 1/10W	
R14			RK73FB2A473J	CHIP R 47K J 1/10W	
R15			RK73FB2A103J	CHIP R 10K J 1/10W	
R20			RK73FB2A393J	CHIP R 39K J 1/10W	
R21			RK73FB2A223J	CHIP R 22K J 1/10W	
R22			RK73FB2A104J	CHIP R 100K J 1/10W	
R301-304			RK73FB2A104J	CHIP R 100K J 1/10W	
R305			RK73FB2A473J	CHIP R 47K J 1/10W	
R401			RK73FB2A100J	CHIP R 10 J 1/10W	
R402			RK73FB2A272J	CHIP R 2.7K J 1/10W	
R403,404			RK73FB2A273J	CHIP R 27K J 1/10W	
R405			RK73FB2A473J	CHIP R 47K J 1/10W	
R406			RK73FB2A150J	CHIP R 15 J 1/10W	
R407			RK73FB2A221J	CHIP R 220 J 1/10W	
R408			RK73FB2A101J	CHIP R 100 J 1/10W	

PARTS LSIT

FINAL UNIT (X45-351X-XX)

Ref. No.	Address	New parts	Parts No.	Description	Destination
R409,410			R92-1332-05	CHIP R 160 J 1W	
R411			RK73FB2A182J	CHIP R 1.8K J 1/10W	
R415			RK73FB2A101J	CHIP R 100 J 1/10W	
R416			RK73FB2A220J	CHIP R 22 J 1/10W	
R417			RK73FB2A101J	CHIP R 100 J 1/10W	
R418			RK73FB2A102J	CHIP R 1.0K J 1/10W	
R419			RK73FB2A104J	CHIP R 100K J 1/10W	
R420			RK73FB2A102J	CHIP R 1.0K J 1/10W	
R421			RK73FB2A393J	CHIP R 39K J 1/10W	
R422			RK73FB2A220J	CHIP R 22 J 1/10W	
R423,424			RK73FB2A331J	CHIP R 330 J 1/10W	
R425			RK73FB2A220J	CHIP R 22 J 1/10W	
R426			RK73FB2A103J	CHIP R 10K J 1/10W	
R427			RK73FB2A102J	CHIP R 1.0K J 1/10W	
R428			RK73FB2A222J	CHIP R 2.2K J 1/10W	
R429			RK73FB2A102J	CHIP R 1.0K J 1/10W	
R439			RK73FB2A470J	CHIP R 47 J 1/10W	
R440			RK73FB2A152J	CHIP R 1.5K J 1/10W	
R441,442			RK73FB2A332J	CHIP R 3.3K J 1/10W	
R443,444			RK73FB2A101J	CHIP R 100 J 1/10W	
R445,446			RK73FB2A472J	CHIP R 4.7K J 1/10W	
R447,448			RK73FB2A101J	CHIP R 100 J 1/10W	
R449,450			RK73FB2A222J	CHIP R 2.2K J 1/10W	
R451,452			RK73FB2A101J	CHIP R 100 J 1/10W	
R453			RK73FB2A152J	CHIP R 1.5K J 1/10W	
R454,455			RK73FB2A332J	CHIP R 3.3K J 1/10W	
R456			RK73FB2A333J	CHIP R 33K J 1/10W	
R457,458			RK73FB2A104J	CHIP R 100K J 1/10W	
R459			RK73FB2A471J	CHIP R 470 J 1/10W	
R460			RK73FB2A220J	CHIP R 22 J 1/10W	
R461			RK73FB2A102J	CHIP R 1.0K J 1/10W	
R462			RK73FB2A101J	CHIP R 100 J 1/10W	
R463,464			RK73FB2A151J	CHIP R 150 J 1/10W	
R465,466			RK73FB2A471J	CHIP R 470 J 1/10W	
R467-470			RK73FB2A330J	CHIP R 33 J 1/10W	
R471			RK73FB2A102J	CHIP R 1.0K J 1/10W	
R472			RK73FB2A104J	CHIP R 100K J 1/10W	
R473			RK73FB2A473J	CHIP R 47K J 1/10W	
R474			RK73FB2A104J	CHIP R 100K J 1/10W	
R475			RK73FB2A473J	CHIP R 47K J 1/10W	
R476			RK73FB2A472J	CHIP R 4.7K J 1/10W	
R480			RK73FB2A470J	CHIP R 47 J 1/10W	
R481			RK73FB2A471J	CHIP R 470 J 1/10W	
R482			RK73FB2A330J	CHIP R 33 J 1/10W	
R483			RK73FB2A221J	CHIP R 220 J 1/10W	
R484			RK73FB2A223J	CHIP R 22K J 1/10W	
R485			RK73FB2A822J	CHIP R 8.2K J 1/10W	
R486			RK73FB2A560J	CHIP R 56 J 1/10W	
R487-489			RK73FB2A223J	CHIP R 22K J 1/10W	
R490			RK73FB2A681J	CHIP R 680 J 1/10W	
R491,492			RK73FB2A471J	CHIP R 470 J 1/10W	
R501			RK73FB2A101J	CHIP R 100 J 1/10W	
R502			RK73FB2A331J	CHIP R 330 J 1/10W	
R503			RK73FB2A681J	CHIP R 680 J 1/10W	
R504			RK73FB2A331J	CHIP R 330 J 1/10W	
R505,506			RK73FB2A6R8J	CHIP R 6.8 J 1/10W	
R507			RK73FB2A681J	CHIP R 680 J 1/10W	
R508,509			R92-0696-05	CHIP R 33 J 1/4W	
R510			RK73FB2A331J	CHIP R 330 J 1/10W	

Ref. No.	Address	New parts	Parts No.	Description	Destination
R511			RK73FB2A151J	CHIP R 150 J 1/10W	
R512,513			R92-1318-05	CHIP R 100 J 1W	
R514-517			RS14DB3A5R6J	FL-PROOF RS 5.6 J 1W	
R518,519			RS14DB3A150J	FL-PROOF RS 15 J 1W	
R520			RK73FB2A561J	CHIP R 560 J 1/10W	
R521,522			RS14DB3A5R6J	FL-PROOF RS 5.6 J 1W	
R530		*	R92-2543-05	FIXED RESISTOR 6.8 1/2W	
R601			RK73FB2A472J	CHIP R 4.7K J 1/10W	
R701			RK73FB2A103J	CHIP R 10K J 1/10W	
R702			RK73FB2A101J	CHIP R 100 J 1/10W	
R703-705			RK73FB2A562J	CHIP R 5.6K J 1/10W	
R706			RK73FB2A472J	CHIP R 4.7K J 1/10W	
R707			RK73FB2A821J	CHIP R 820 J 1/10W	
R708			RK73FB2A272J	CHIP R 2.7K J 1/10W	
R709			RK73FB2A333J	CHIP R 33K J 1/10W	
R710			R92-1282-05	CHIP R 10 J 1W	
R712			R92-1316-05	CHIP R 39 J 1W	
R713			RK73FB2A471J	CHIP R 470 J 1/10W	
R714			RK73FB2A153J	CHIP R 15K J 1/10W	
VR1			R12-6730-05	TRIMMING POT. 220	
VR501,502			R12-6734-05	TRIMMING POT. 1K	
W301			R92-0150-05	JUMPER REST 0 OHM (ANT1)	
W303			R92-0150-05	JUMPER REST 0 OHM (ANT2)	
K1-14			S51-1420-05	RELAY	
K301			S51-2417-05	RELAY	
K302			S51-1429-05	RELAY	
K601			S51-2423-05	RELAY	
D1,2			1SS101	DIODE	
D3			RLZJ5.1B	ZENER DIODE	
D4-10			LFB01	DIODE	
D11			DAP202K	DIODE	
D301,302			DSA301LA	DIODE	
D303,304			LFB01	DIODE	
D401			1SS226	DIODE	
D402		*	RD9.1M(B2)	ZENER DIODE	
D450			DAN235K	DIODE	
D451-456			1SV128	DIODE	
D457			DAN235K	DIODE	
D501			MA27T-B	DIODE	
D502,503			SV03YS	DIODE	
D504			SG-5L(R)	DIODE	
D601			LFB01	DIODE	
D701			DAN202K	DIODE	
D702			LFB01	DIODE	
IC1			TC9174F	IC (CMOS I/O EXTENSION)	
IC402			UPC7805H	IC (VOLTAGE REGULATOR/ +5V)	
IC601,602			UPC7808H	IC (VOLTAGE REGULATOR/ +8V)	
IC701			NJM2904M	IC (OP AMP X2)	
Q1-4			FMA7	TRANSISTOR	
Q5			DTC114EK	DIGITAL TRANSISTOR	
Q6			FMC2	TRANSISTOR	
Q10-16			DTB143EK	DIGITAL TRANSISTOR	
Q401			2SA1162(Y)	TRANSISTOR	
Q402,403			2SC2712(Y)	TRANSISTOR	
Q404			2SD1624(S)	TRANSISTOR	
Q405			2SD1406(Y)	TRANSISTOR	
Q460,461			3SK131(M)	FET	
Q470,471			3SK131(M)	FET	

PARTS LIST

FINAL UNIT (X45-351X-XX)
AT UNIT (X53-3340-02)

Ref. No.	Address	New parts	Parts No.	Description	Destination
Q472			2SC2712(Y)	TRANSISTOR	
Q475			3SK131(M)	FET	
Q501			2SC1971	TRANSISTOR	
Q502,503			2SC3133	TRANSISTOR	
Q504			2SD1406(Y)	TRANSISTOR	
Q505,506			2SC2879	TRANSISTOR	
Q507			2SD1406(Y)	TRANSISTOR	
Q601			DTC143TK	DIGITAL TRANSISTOR	
Q701			DTC114TK	DIGITAL TRANSISTOR	
Q702,703			DTD114EK	DIGITAL TRANSISTOR	
TH452			157-502-53002	THERMISTOR 5K	
TH701			5TP-41S	THERMISTOR	
AT UNIT (X53-3340-02)					
C1			CC45FSL2H330J	CERAMIC 33PF J	
C2-8			CK73FB1E103K	CHIP C 0.010UF K	
C9,10			CK73FB1H102K	CHIP C 1000PF K	
C11			CK73FB1E103K	CHIP C 0.010UF K	
C12			CE04EW1C470M	ELECTRO 47UF 16WV	
C13-15			CK73FB1E103K	CHIP C 0.010UF K	
C16			CK73EF1E474Z	CHIP C 0.47UF Z	
C17-19			CK73FB1E103K	CHIP C 0.010UF K	
C20			CE04EW1C101M	ELECTRO 100UF 16WV	
C21-23			CK73FB1E103K	CHIP C 0.010UF K	
C24			CK73EF1E474Z	CHIP C 0.47UF Z	
C25			CK73FB1E103K	CHIP C 0.010UF K	
C26			CE04EW1C101M	ELECTRO 100UF 16WV	
C27-37			CK73FB1E103K	CHIP C 0.010UF K	
C38			CK73FB1H103K	CHIP C 0.010UF K	
C101-103			CK73FB1H103K	CHIP C 0.010UF K	
C105-108			CK73FB1H103K	CHIP C 0.010UF K	
TC1			C05-0031-15	TRIMMER CAPACITOR 10PF	
VC1,2	2L		C02-0023-05	VARIABLE CAPACITOR 300PF	
A5	3L		D40-0633-15	GEAR ASSY	
CN1,2			E04-0157-05	RF COAXIAL CABLE SOCKET	
CN3			E40-3239-05	PIN CONNECTOR (4P)	
CN4			E40-3240-05	PIN CONNECTOR (5P)	
CN5			E40-3238-05	PIN CONNECTOR (3P)	
CN6			E40-3237-05	PIN CONNECTOR (2P)	
CN7			E40-5068-05	PIN CONNECTOR (11P)	
CN101			E40-5066-05	PIN CONNECTOR (9P)	
–			F20-1081-04	INSULATING SHEET	
A1	2M		F11-1142-22	SHIELDING CASE	
A2	2M		F10-1401-23	SHIELDING PLATE	
A3	1M		F11-1143-14	SHIELDING COVER	
A4	2M		F11-1144-14	SHIELDING COVER	
A6	1M	*	F10-2192-04	SHIELDING COVER	
–			J61-0307-05	BAND	
L1			L39-0496-05	COIL	
L2			L39-0415-25	COIL	
L3-6			L40-1011-13	SMALL FIXED INDUCTOR	
L7-11			L40-1011-14	SMALL FIXED INDUCTOR	
L12-14			L40-1011-13	SMALL FIXED INDUCTOR	
L101-103			L40-1011-14	SMALL FIXED INDUCTOR	

Ref. No.	Address	New parts	Parts No.	Description	Destination
L105-108			L40-1011-14	SMALL FIXED INDUCTOR	
L109			L34-1276-15	COIL	
L110			L39-0479-05	COIL	
L111			L39-0495-05	COIL	
L112			L39-0494-15	COIL	
T110-112			L92-0117-05	TROIDAL CORE	
K	1M,2M		N87-3006-46	BRAZIER HEAD TAPTITE SCREW	
S	1M,2M		N88-3006-46	FLAT HEAD TAPTITE SCREW	
R1,2			RD14BB2E101J	RD 100 J 1/4W	
R3			RK73FB2A102J	CHIP R 1.0K J 1/10W	
R4			RD14BB2E560J	RD 56 J 1/4W	
R5,6			RK73FB2A181J	CHIP R 180 J 1/10W	
R7-10			RK73FB2A103J	CHIP R 10K J 1/10W	
R11			RK73FB2A563J	CHIP R 56K J 1/10W	
R12			RK73FB2A121J	CHIP R 120 J 1/10W	
R13			RK73FB2A101J	CHIP R 100 J 1/10W	
R14			RK73FB2A563J	CHIP R 56K J 1/10W	
R15			RK73FB2A121J	CHIP R 120 J 1/10W	
R16			RK73FB2A101J	CHIP R 100 J 1/10W	
R17			RK73FB2A330J	CHIP R 33 J 1/10W	
R18			RK73FB2A103J	CHIP R 10K J 1/10W	
R19			RK73FB2A330J	CHIP R 33 J 1/10W	
R20-23			RK73FB2A103J	CHIP R 10K J 1/10W	
R24,25			RD14BB2E100J	RD 10 J 1/4W	
R26-30			RK73FB2A103J	CHIP R 10K J 1/10W	
R31			RK73FB2A472J	CHIP R 4.7K J 1/10W	
R32			RK73FB2A103J	CHIP R 10K J 1/10W	
R33			RD14BB2E101J	RD 100 J 1/4W	
R34			RK73FB2A472J	CHIP R 4.7K J 1/10W	
VR101,102	3L		R01-3435-05	POTENTIOMETER 10K	
W12-17			R92-0679-05	CHIP R 0 OHM	
W18-28			R92-0670-05	CHIP R 0 OHM	
W29-31			R92-0679-05	CHIP R 0 OHM	
W32			R92-0670-05	CHIP R 0 OHM	
W34			R92-0670-05	CHIP R 0 OHM	
W35,36			R92-0679-05	CHIP R 0 OHM	
W37			R92-0670-05	CHIP R 0 OHM	
W40	2B	*	E33-1984-05	PROCESSED WIRE KIT (to FIL:CN4)	
W40	2B	*	E33-1984-05	PROCESSED WIRE KIT (to CONT:CN4)	
W40	2B	*	E33-1984-05	PROCESSED WIRE KIT (to RL:AT1)	
W40	2B	*	E33-1984-05	PROCESSED WIRE KIT (to RL:AT2)	
K1			S51-2407-05	RELAY	
K101-103			S76-0401-05	RELAY	
K105-108			S76-0401-05	RELAY	
M1,2	3L		T42-0453-05	DC MOTOR	
D1,2			1SS101	DIODE	
D3-8			1SS226	DIODE	
D10			1S1555	DIODE	
D101-103			1S1555	DIODE	
D105-108			1S1555	DIODE	
D109,110			RLS73	DIODE	
IC1			SN74S74N	IC (ONE SHOT MULTI)	
IC2,3			TC4066BP	IC (ANALOG/ DIGITAL SW)	
IC4,5			BA6109U2	IC (MOTOR DRIVER)	
IC6			NJM2903S	IC (DUAL COMPALATOR)	
IC7			MC78L05M	IC (VOLTAGE REGULATOR/ +5V)	

PARTS LSIT

AT UNIT (X53-3340-02)
CONTROL UNIT (X53-356X-XX)

Ref. No.	Address	New parts	Parts No.	Description			Destination
Q1,2			2SC2714(Y)	TRANSISTOR			
Q3			DTC114EK	DIGITAL TRANSISTOR			
Q4			2SA1204(Y)	TRANSISTOR			
Q5			DTC114EK	DIGITAL TRANSISTOR			
CONTROL UNIT (X53-356X-XX) 0-11 : K,P 0-21 : M 0-22 : M2 0-71 : X 2-71 : E 2-72 : E2 2-73 : E3 2-74 : E9							
C1,2			CK73GB1H102K	CHIP C	1000PF	K	
C3			C92-0044-05	CHIP-ELE	47UF	10WV	
C4			CK73GB1H102K	CHIP C	1000PF	K	
C5			C92-0032-05	CHIP-ELE	4.7UF	25WV	
C6,7			CK73GF1E104Z	CHIP C	0.10UF	Z	
C8			C92-0037-05	CHIP-ELE	10UF	16WV	
C9			C92-0032-05	CHIP-ELE	4.7UF	25WV	
C10,11			CK73GF1E104Z	CHIP C	0.10UF	Z	
C12			C92-0037-05	CHIP-ELE	10UF	16WV	
C13			C92-0032-05	CHIP-ELE	4.7UF	25WV	
C14,15			CK73GF1E104Z	CHIP C	0.10UF	Z	
C16			C92-0037-05	CHIP-ELE	10UF	16WV	
C17-41			CK73GB1H102K	CHIP C	1000PF	K	
C42			CK73GB1H103K	CHIP C	0.010UF	K	
C43,44			CK73GB1H102K	CHIP C	1000PF	K	
C45			C92-0044-05	CHIP-ELE	47UF	10WV	
C46,47			CK73GB1H103K	CHIP C	0.010UF	K	
C48,49			CC73GCH1H330J	CHIP C	33PF	J	
C50-54			CK73GB1H103K	CHIP C	0.010UF	K	
C55			C92-0044-05	CHIP-ELE	47UF	10WV	
C56,57			CK73GF1E104Z	CHIP C	0.10UF	Z	
C58			CK73GB1H103K	CHIP C	0.010UF	K	
C59			C92-0044-05	CHIP-ELE	47UF	10WV	
C60			CK73GB1H103K	CHIP C	0.010UF	K	
C61			C92-0044-05	CHIP-ELE	47UF	10WV	
C62-77			CC73GCH1H101J	CHIP C	100PF	J	
C78-80			CK73GB1H103K	CHIP C	0.010UF	K	
C81-88			CC73GCH1H101J	CHIP C	100PF	J	
C89-93			CK73GB1H103K	CHIP C	0.010UF	K	
C94-96			C92-0037-05	CHIP-ELE	10UF	16WV	
C97			C92-0044-05	CHIP-ELE	47UF	10WV	
C98-102			CK73GB1H103K	CHIP C	0.010UF	K	
C103,104			CC73GCH1H220J	CHIP C	22PF	J	
C105-107			CK73GB1H103K	CHIP C	0.010UF	K	
C108			C92-0044-05	CHIP-ELE	47UF	10WV	
C109,110			CK73GB1H103K	CHIP C	0.010UF	K	
C111-113			C92-0023-05	CHIP-ELE	1.0UF	50WV	
C114			CK73GB1H103K	CHIP C	0.010UF	K	
C115			C92-0023-05	CHIP-ELE	1.0UF	50WV	
C116,117			CK73GB1H103K	CHIP C	0.010UF	K	
C118-124			CK73GB1H102K	CHIP C	1000PF	K	
C125,126			CK73GB1H103K	CHIP C	0.010UF	K	
C127-141			CC73GCH1H101J	CHIP C	100PF	J	
C142-147			CK73GB1H102K	CHIP C	1000PF	K	
C148-150			CC73GCH1H101J	CHIP C	100PF	J	
C152			CC73GCH1H101J	CHIP C	100PF	J	
C153-175			CK73GB1H102K	CHIP C	1000PF	K	
C177-183			CK73GB1H102K	CHIP C	1000PF	K	
C184-187			CK73GB1H103K	CHIP C	0.010UF	K	
C188-223			CK73GB1H102K	CHIP C	1000PF	K	
C224,225			CC73GSL1H471J	CHIP C	470PF	J	
C226,227			CK73GB1H103K	CHIP C	0.010UF	K	
C228,229			CK73GB1H102K	CHIP C	1000PF	K	
C230			CK73GB1H103K	CHIP C	0.010UF	K	
C231-233			CK73GB1H102K	CHIP C	1000PF	K	
C501-509			CK73GB1H103K	CHIP C	0.010UF	K	
C511-521			CK73GB1H103K	CHIP C	0.010UF	K	
C522			CK73GB1H102K	CHIP C	1000PF	K	
C523			CK73GF1E104Z	CHIP C	0.10UF	Z	
C601-604			CK73GB1H103K	CHIP C	0.010UF	K	
C605			CK73GF1E104Z	CHIP C	0.10UF	Z	
C606			CK73GB1H102K	CHIP C	1000PF	K	
401	1D		E23-0623-04	EARTH LUG			
CN1,2		*	E40-5744-05	FLAT CABLE CONNECTOR (20P)			
CN3			E40-3239-05	PIN CONNECTOR (4P)			
CN4		*	E40-5763-05	PIN CONNECTOR (12P)			
CN5		*	E40-5744-05	FLAT CABLE CONNECTOR (20P)			
CN6			E40-5761-05	FLAT CABLE CONNECTOR (26P)			
CN7		*	E40-5742-05	FLAT CABLE CONNECTOR (13P)			
CN8		*	E40-5739-05	FLAT CABLE CONNECTOR (10P)			
CN9,10		*	E40-5740-05	FLAT CABLE CONNECTOR (20P)			
CN11		*	E40-5744-05	FLAT CABLE CONNECTOR (20P)			
CN12			E02-2015-05	SOCKET FOR IC			
CN501		*	E40-5740-05	FLAT CABLE CONNECTOR (20P)			
CN601			E40-3251-05	PIN CONNECTOR (7P)			
J601			E06-0858-15	CYLINDRICAL RECEPTACLE (8P MIC)			
A1	3G	*	F01-1007-04	HEAT SINK			
402	3G		G02-0574-04	FLAT SPRING			
403	2A	*	J19-1570-05	HOLDER (BATT)			
L1-3			L40-4705-48	SMALL FIXED INDUCTOR (47UH)			
L4,5			L40-1292-18	SMALL FIXED INDUCTOR			
L6,7			L40-4705-48	SMALL FIXED INDUCTOR (47UH)			
L8			L40-1292-18	SMALL FIXED INDUCTOR			
L11-25			L40-4705-48	SMALL FIXED INDUCTOR (47UH)			
L26,27			L40-1005-48	SMALL FIXED INDUCTOR (10UH)			
L28			L40-4705-48	SMALL FIXED INDUCTOR (47UH)			
X1		*	L77-1589-05	CRYSTAL RESONATOR (11.0592MHZ)			
X2			L78-0325-05	RESONATOR (2.0MHZ)			
G	3G		N32-2606-46	FLAT HEAD MACHIN SCREW			
R1,2			RK73GB1J101J	CHIP R	100	J 1/16W	
R3,4			RK73GB1J102J	CHIP R	1.0K	J 1/16W	
R5			RK73GB1J101J	CHIP R	100	J 1/16W	
R6			RK73GB1J473J	CHIP R	47K	J 1/16W	
R7-9			RK73GB1J102J	CHIP R	1.0K	J 1/16W	
R10-28			RK73GB1J101J	CHIP R	100	J 1/16W	
R29			RK73GB1J105J	CHIP R	1.0M	J 1/16W	
R30-37			RK73GB1J101J	CHIP R	100	J 1/16W	
R39			RK73GB1J102J	CHIP R	1.0K	J 1/16W	
R40			RK73GB1J471J	CHIP R	470	J 1/16W	
R41			RK73GB1J103J	CHIP R	10K	J 1/16W	
R42			RK73GB1J222J	CHIP R	2.2K	J 1/16W	
R43,44			RK73GB1J104J	CHIP R	100K	J 1/16W	
R45			RK73GB1J472J	CHIP R	4.7K	J 1/16W	
R46			RK73GB1J102J	CHIP R	1.0K	J 1/16W	
R47			RK73GB1J473J	CHIP R	47K	J 1/16W	
R48			RK73GB1J102J	CHIP R	1.0K	J 1/16W	X

PARTS LIST

CONTROL UNIT (X53-356X-XX)

Ref. No.	Address	New parts	Parts No.	Description	Destination
R49			RK73GB1J473J	CHIP R 47K J 1/16W	
R51			RK73GB1J473J	CHIP R 47K J 1/16W	
R52			RK73GB1J103J	CHIP R 10K J 1/16W	
R53			RK73GB1J102J	CHIP R 1.0K J 1/16W	E3E9M
R54			RK73GB1J473J	CHIP R 47K J 1/16W	
R55,56			RK73GB1J103J	CHIP R 10K J 1/16W	
R57			RK73GB1J102J	CHIP R 1.0K J 1/16W	EE2E3E9
R58			RK73GB1J473J	CHIP R 47K J 1/16W	
R59-68			RK73GB1J103J	CHIP R 10K J 1/16W	
R69			RK73GB1J102J	CHIP R 1.0K J 1/16W	E2MM2
R70			RK73GB1J473J	CHIP R 47K J 1/16W	
R71,72			RK73GB1J103J	CHIP R 10K J 1/16W	
R73			RK73GB1J102J	CHIP R 1.0K J 1/16W	E
R74			RK73GB1J473J	CHIP R 47K J 1/16W	
R75-85			RK73GB1J103J	CHIP R 10K J 1/16W	
R86,87			RK73GB1J472J	CHIP R 4.7K J 1/16W	
R88			RK73GB1J153J	CHIP R 15K J 1/16W	
R89			RK73GB1J334J	CHIP R 330K J 1/16W	
R90-92			RK73GB1J153J	CHIP R 15K J 1/16W	
R93			RK73GB1J103J	CHIP R 10K J 1/16W	
R94,95			RK73GB1J153J	CHIP R 15K J 1/16W	
R96			RK73GB1J105J	CHIP R 1.0M J 1/16W	
R97			RK73GB1J102J	CHIP R 1.0K J 1/16W	
R98			RK73GB1J473J	CHIP R 47K J 1/16W	
R99			RK73GB1J102J	CHIP R 1.0K J 1/16W	
R100-105			RK73GB1J105J	CHIP R 1.0M J 1/16W	
R107			RK73GB1J105J	CHIP R 1.0M J 1/16W	
R108-119			RK73GB1J104J	CHIP R 100K J 1/16W	
R120-130			RK73GB1J101J	CHIP R 100 J 1/16W	
R131			RK73GB1J102J	CHIP R 1.0K J 1/16W	
R132,133			RK73GB1J103J	CHIP R 10K J 1/16W	
R134-137			RK73GB1J101J	CHIP R 100 J 1/16W	
R138-140			RK73GB1J101J	CHIP R 100 J 1/16W	
R141-144			RK73GB1J102J	CHIP R 1.0K J 1/16W	
R145			RK73GB1J223J	CHIP R 22K J 1/16W	
R146,147			RK73GB1J473J	CHIP R 47K J 1/16W	
R148-150			RK73GB1J101J	CHIP R 100 J 1/16W	
R152-169			RK73GB1J101J	CHIP R 100 J 1/16W	
R170			RK73GB1J474J	CHIP R 470K J 1/16W	
R171			RK73GB1J102J	CHIP R 1.0K J 1/16W	
R172-177			RK73GB1J101J	CHIP R 100 J 1/16W	
R179-201			RK73GB1J101J	CHIP R 100 J 1/16W	
R202			RK73GB1J473J	CHIP R 47K J 1/16W	
R203-214			RK73GB1J101J	CHIP R 100 J 1/16W	
R215			RK73GB1J473J	CHIP R 47K J 1/16W	
R216-222			RK73GB1J101J	CHIP R 100 J 1/16W	
R223			RK73GB1J333J	CHIP R 33K J 1/16W	
R224			RK73GB1J101J	CHIP R 100 J 1/16W	
R225			RK73GB1J473J	CHIP R 47K J 1/16W	
R226			RK73GB1J104J	CHIP R 100K J 1/16W	
R227-234			RK73GB1J103J	CHIP R 10K J 1/16W	
R235-237			RK73GB1J102J	CHIP R 1.0K J 1/16W	
R238-240			RK73GB1J101J	CHIP R 100 J 1/16W	
R241			RK73GB1J473J	CHIP R 47K J 1/16W	
R242,243			RK73GB1J102J	CHIP R 1.0K J 1/16W	
R244			RK73GB1J101J	CHIP R 100 J 1/16W	KPMXE
R244			RK73GB1J101J	CHIP R 100 J 1/16W	E2E3E9
R245			RK73GB1J473J	CHIP R 47K J 1/16W	
R501-504			RK73GB1J473J	CHIP R 47K J 1/16W	

Ref. No.	Address	New parts	Parts No.	Description	Destination
R505			RK73GB1J391J	CHIP R 390 J 1/16W	
R506			RK73GB1J271J	CHIP R 270 J 1/16W	
R507			RK73GB1J473J	CHIP R 47K J 1/16W	
R508			RK73GB1J391J	CHIP R 390 J 1/16W	
R509			RK73GB1J271J	CHIP R 270 J 1/16W	
R510			RK73GB1J391J	CHIP R 390 J 1/16W	
R511			RK73GB1J271J	CHIP R 270 J 1/16W	
R512			RK73GB1J391J	CHIP R 390 J 1/16W	
R513			RK73GB1J271J	CHIP R 270 J 1/16W	
R514			RK73GB1J473J	CHIP R 47K J 1/16W	
R515			RK73GB1J391J	CHIP R 390 J 1/16W	
R516			RK73GB1J271J	CHIP R 270 J 1/16W	
R517			RK73GB1J391J	CHIP R 390 J 1/16W	
R518			RK73GB1J271J	CHIP R 270 J 1/16W	
R519			RK73GB1J391J	CHIP R 390 J 1/16W	
R520			RK73GB1J271J	CHIP R 270 J 1/16W	
R521-523			RK73GB1J473J	CHIP R 47K J 1/16W	
R524			RK73GB1J102J	CHIP R 1.0K J 1/16W	
R525			RK73GB1J473J	CHIP R 47K J 1/16W	
R526-527			RK73GB1J101J	CHIP R 100 J 1/16W	
R528			RK73GB1J391J	CHIP R 390 J 1/16W	
R529			RK73GB1J271J	CHIP R 270 J 1/16W	
R530			RK73GB1J391J	CHIP R 390 J 1/16W	
R531			RK73GB1J271J	CHIP R 270 J 1/16W	
R532			RK73GB1J391J	CHIP R 390 J 1/16W	
R533			RK73GB1J271J	CHIP R 270 J 1/16W	
R534			RK73GB1J391J	CHIP R 390 J 1/16W	
R535			RK73GB1J271J	CHIP R 270 J 1/16W	
R536-539			RK73GB1J101J	CHIP R 100 J 1/16W	
R540			RK73GB1J473J	CHIP R 47K J 1/16W	
R541,542			RK73GB1J101J	CHIP R 100 J 1/16W	
R543-546			RK73GB1J473J	CHIP R 47K J 1/16W	
R547,548			RK73GB1J103J	CHIP R 10K J 1/16W	
R549-555			RK73GB1J473J	CHIP R 47K J 1/16W	
R556			RK73GB1J103J	CHIP R 10K J 1/16W	
S1			S62-0412-05	SLIDE SWITCH	
S501-545		*	S70-0439-05	TACT SWITCH	
S546-551		*	S70-0439-05	TACT SWITCH	
D1-3			1SS355	DIODE	
D4		*	RD7.5M(B3)	ZENER DIODE	
D5-12			1SS355	DIODE	
D501			B30-2036-05	LED (RED)	
D502		*	B30-2146-05	LED (ORANGE)	
D510-519		*	B30-2146-05	LED (ORANGE)	
IC1,2			UPC7805H	IC (VOLTAGE REGULATOR/ +5V)	
IC3			TA78L08F	IC (VOLTAGE REGULATOR)	
IC4			AT2402N10SI2.7	IC (2kbit SERIAL EEPROMM)	
IC5			MB3780A	IC (BATTERY BACKUP)	
IC6		*	M37702S4BFP	IC	
IC7			TC7S04F	IC (2CH NAND GATE)	
IC8			LC3564QMF-10	IC	
IC9			TC4052BF	IC (4CH MPX/DE-MPX)	
IC10			TC7S04F	IC (2CH NAND GATE)	
IC11		*	TC74VHC32F	IC	
IC12		*	27C512RJLVC	IC	
IC13			TC4052BF	IC (4CH MPX/DE-MPX)	
IC14		*	TC74VHC08F	IC	
IC15		*	TC74VHC245F	IC	

PARTS LSIT

CONTROL UNIT (X53-356X-XX)
TX-RX UNIT (X57-4620-00)

Ref. No.	Address	New parts	Parts No.	Description			Destination
IC16			CXD1095Q	IC (I/O EXPANDER)			
IC17,18		*	TC74VHC138F	IC			
IC19		*	TC74VHC573F	IC			
IC20,21			LZ92K371	IC (ENCODER PROCESSOR)			
IC22,23			CXD1095Q	IC (I/O EXPANDER)			
IC24		*	68HC05G2419553	IC			
IC25,26			TC4584BF	IC (BUFF)			
IC27		*	ADM232LAR	IC			
IC28			NJM2904M	IC (OP AMP X2)			
IC29			TC7S32F	IC (2CH NAND GATE)			
IC501-504			UPD6345GS	IC			
Q1			DTA143EK	DIGITAL TRANSISTOR			
Q2			DTC143EK	DIGITAL TRANSISTOR			
Q3,4			DTC114EK	DIGITAL TRANSISTOR			
Q5			DTC143EK	DIGITAL TRANSISTOR			
Q6-11			DTC114EK	DIGITAL TRANSISTOR			
Q12,13			DTA143EK	DIGITAL TRANSISTOR			
Q14-22			DTC143EK	DIGITAL TRANSISTOR			
Q23,24			DTA143EK	DIGITAL TRANSISTOR			
Q27,28			DTC114EK	DIGITAL TRANSISTOR			
Q29-31			DTC143TK	DIGITAL TRANSISTOR			
Q33			DTC143EK	DIGITAL TRANSISTOR			
Q501,502			DTC114EK	DIGITAL TRANSISTOR			

TX-RX UNIT (X57-4620-00)

C1			C90-2045-05	ELECTRO	2.2UF	25WV	
C2,3			CK73FF1E104Z	CHIP C	0.10UF	Z	
C4,5			CC73FCH1H330J	CHIP C	33PF	J	
C6			C90-2045-05	ELECTRO	2.2UF	25WV	
C7,8			CK73FF1E104Z	CHIP C	0.10UF	Z	
C9-14			CC73FCH1H330J	CHIP C	33PF	J	
C15			CC73FSL1H152J	CHIP C	1500PF	J	
C16			CC73FCH1H101J	CHIP C	100PF	J	
C17			CC73FSL1H152J	CHIP C	1500PF	J	
C18			CC73FCH1H101J	CHIP C	100PF	J	
C19-22			CK73FF1E104Z	CHIP C	0.10UF	Z	
C23			C90-2045-05	ELECTRO	2.2UF	25WV	
C24			CK73FB1H223K	CHIP C	0.022UF	K	
C25			CK73FF1E104Z	CHIP C	0.10UF	Z	
C26,27			CK73FB1H223K	CHIP C	0.022UF	K	
C28			C90-2045-05	ELECTRO	2.2UF	25WV	
C29			CK73FF1E104Z	CHIP C	0.10UF	Z	
C30			CK73GB1H102K	CHIP C	1000PF	K	
C31			CK73FB1H471K	CHIP C	470PF	K	
C32			CK73FF1E104Z	CHIP C	0.10UF	Z	
C33			CK73GB1H102K	CHIP C	1000PF	K	
C34			C90-2045-05	ELECTRO	2.2UF	25WV	
C36			CC73GCH1H330J	CHIP C	33PF	J	
C37			CK73GB1H102K	CHIP C	1000PF	K	
C38			CK73GB1H103K	CHIP C	0.010UF	K	
C39,40			CK73FB1H102K	CHIP C	1000PF	K	
C41			C90-2045-05	ELECTRO	2.2UF	25WV	
C42			CK73FB1H103K	CHIP C	0.010UF	K	
C44			CK73GB1H102K	CHIP C	1000PF	K	
C45			CC73FCH1H121J	CHIP C	120PF	J	
C46			CK73GB1H102K	CHIP C	1000PF	K	
C50			CK73GB1H102K	CHIP C	1000PF	K	

Ref. No.	Address	New parts	Parts No.	Description			Destination
C52			CE04EW1C470M	ELECTRO	47UF	16WV	
C53			CK73GB1E223K	CHIP C	0.022UF	K	
C54			CQ92M1H154K	MYLAR	0.15UF	K	
C55			CK73FB1H102K	CHIP C	1000PF	K	
C56			CE04EW1C101M	ELECTRO	100UF	16WV	
C57			CC73ECH1H202J	CHIP C	2000PF	J	
C58			CK73FB1H103K	CHIP C	0.010UF	K	
C59			CC73GCH1H680J	CHIP C	68PF	J	
C60			CC73GCH1H180J	CHIP C	18PF	J	
C61			CC73GCH1H060D	CHIP C	6.0PF	D	
C62			CC73GCH1H470J	CHIP C	47PF	J	
C63			CK73GB1H103K	CHIP C	0.010UF	K	
C64			CE04EW1C101M	ELECTRO	100UF	16WV	
C65,66			CK73GB1H102K	CHIP C	1000PF	K	
C67			CE04EW1C470M	ELECTRO	47UF	16WV	
C68,69			CK73GB1H102K	CHIP C	1000PF	K	
C100			CE04EW1C100M	ELECTRO	10UF	16WV	
C101			CK73FF1E104Z	CHIP C	0.10UF	Z	
C103			CE04EW1H010M	ELECTRO	1.0UF	50WV	
C104			CE04EW1C100M	ELECTRO	10UF	16WV	
C105			CK73GB1H102K	CHIP C	1000PF	K	
C106			CC73FCH1H102J	CHIP C	1000PF	J	
C107			CK73FF1E104Z	CHIP C	0.10UF	Z	
C108			CE04EW1C100M	ELECTRO	10UF	16WV	
C109			CK73FF1E104Z	CHIP C	0.10UF	Z	
C112			CC73FCH1H102J	CHIP C	1000PF	J	
C113,114			CQ92FM1H223K	MYLAR	0.022UF	K	
C116			CC73FCH1H102J	CHIP C	1000PF	J	
C118,119			CC73GCH1H271J	CHIP C	270PF	J	
C120			CE04EW1C100M	ELECTRO	10UF	16WV	
C121			CE04EW1H010M	ELECTRO	1.0UF	50WV	
C122			CC73FSL1H152J	CHIP C	1500PF	J	
C123			CC73GCH1H101J	CHIP C	100PF	J	
C124			CC73GCH1H221J	CHIP C	220PF	J	
C125			CK73GB1E223K	CHIP C	0.022UF	K	
C126			CE04EW1C100M	ELECTRO	10UF	16WV	
C127			CK73GB1H103K	CHIP C	0.010UF	K	
C128			CC73FSL1H221J	CHIP C	220PF	J	
C129			CC73FCH1H101J	CHIP C	100PF	J	
C130			CE04EW1C100M	ELECTRO	10UF	16WV	
C131			CK73FF1E104Z	CHIP C	0.10UF	Z	
C132			CE04EW1C100M	ELECTRO	10UF	16WV	
C133			CC73GCH1H101J	CHIP C	100PF	J	
C134			CK73GB1E223K	CHIP C	0,022UF	K	
C135			CE04EW1C100M	ELECTRO	10UF	16WV	
C136			CK73GB1E223K	CHIP C	0.022UF	K	
C137			CC73FCH1H102J	CHIP C	1000PF	J	
C138			CC73GCH1H221J	CHIP C	220PF	J	
C139			CC73GCH1H271J	CHIP C	270PF	J	
C140,141			CK73GB1E223K	CHIP C	0.022UF	K	
C142			CE04EW1C100M	ELECTRO	10UF	16WV	
C143			CK73GB1E223K	CHIP C	0.022UF	K	
C144		*	CQ92FM1H683K	MYLAR	0.068UF	K	
C145			CK73FB1E104K	CHIP C	0.10UF	K	
C146,147			CC73FCH1H102J	CHIP C	1000PF	J	
C150			CK73GB1E223K	CHIP C	0.022UF	K	
C151			CE04EW1C100M	ELECTRO	10UF	16WV	
C152			CC73FCH1H102J	CHIP C	1000PF	J	
C153			CC73GCH1H271J	CHIP C	270PF	J	

PARTS LIST

TX-RX UNIT (X57-4620-00)

Ref. No.	Address	New parts	Parts No.	Description			Destination
C154			CK73GB1E223K	CHIP C	0.022UF	K	
C155			CE04EW1C100M	ELECTRO	10UF	16WV	
C156			CK73FF1E104Z	CHIP C	0.10UF	Z	
C157			CK73GB1E223K	CHIP C	0.022UF	K	
C158			C90-2045-05	ELECTRO	2.2UF	25WV	
C159,160			CK73FF1E104Z	CHIP C	0.10UF	Z	
C161			CK73GB1E223K	CHIP C	0.022UF	K	
C162			CE04EW1C100M	ELECTRO	10UF	16WV	
C163			CK73FF1E104Z	CHIP C	0.10UF	Z	
C164			CE04EW1C100M	ELECTRO	10UF	16WV	
C165			CK73FF1E104Z	CHIP C	0.10UF	Z	
C166,167			CE04EW1C100M	ELECTRO	10UF	16WV	
C168,169			CK73FF1E104Z	CHIP C	0.10UF	Z	
C170			CK73GB1H103K	CHIP C	0.010UF	K	
C171-176			CE04EW1C100M	ELECTRO	10UF	16WV	
C177			CQ92M1H103K	MYLAR	0.010UF	K	
C178,179			CC73FSL1H152J	CHIP C	1500PF	J	
C180,181			CC73ECH1H202J	CHIP C	2000PF	J	
C182			CC73GCH1H331J	CHIP C	330PF	J	
C183-185			CC73FSL1H152J	CHIP C	1500PF	J	
C186			CE04EW1C100M	ELECTRO	10UF	16WV	
C187			CC73GCH1H331J	CHIP C	330PF	J	
C188			CK73GB1H562K	CHIP C	5600PF	K	
C189			CE04EW1C100M	ELECTRO	10UF	16WV	
C190			CC73GCH1H331J	CHIP C	330PF	J	
C191,192			CE04NW1C100M	ELECTRO	10UF	16WV	
C193			CK73GB1H103K	CHIP C	0.010UF	K	
C194			CE04NW1C100M	ELECTRO	10UF	16WV	
C195			CE04EW1H010M	ELECTRO	1.0UF	50WV	
C196,197			CE04NW1C100M	ELECTRO	10UF	16WV	
C198			CE04EW1C100M	ELECTRO	10UF	16WV	
C199,200			CE04NW1C220M	ELECTRO	22UF	16WV	
C201,202			CK73GF1E104Z	CHIP C	0.10UF	Z	
C203,204			CE04NW1E4R7M	ELECTRO	4.7UF	25WV	
C205			CE04EW1C100M	ELECTRO	10UF	16WV	
C206,207			CK73GF1E104Z	CHIP C	0.10UF	Z	
C208			CK73GB1E223K	CHIP C	0.022UF	K	
C209,210			CE04NW1C100M	ELECTRO	10UF	16WV	
C212,213			CE04NW1H010M	ELECTRO	1.0UF	50WV	
C214			CK73GB1H472K	CHIP C	4700PF	K	
C215,216			CE04EW1C100M	ELECTRO	10UF	16WV	
C218,219			CK73EF1E474Z	CHIP C	0.47UF	Z	
C221,222			CK73FB1H102K	CHIP C	1000PF	K	
C223			CE04EW1C471M	ELECTRO	470UF	16WV	
C224			CE04EW1C100M	ELECTRO	10UF	16WV	
C225			CE04EW1C470M	ELECTRO	47UF	16WV	
C226			CE04EW1C101M	ELECTRO	100UF	16WV	
C227			CE04EW1C100M	ELECTRO	10UF	16WV	
C228			CE04EW1C101M	ELECTRO	100UF	16WV	
C229			CE04EW1C100M	ELECTRO	10UF	16WV	
C230			CE04EW1C471M	ELECTRO	470UF	16WV	
C231,232			CK73EF1E474Z	CHIP C	0.47UF	Z	
C233			CQ92M1H154K	MYLAR	0.15UF	K	
C235,236			CK73FB1H102K	CHIP C	1000PF	K	
C237			CE04EW1E471M	ELECTRO	470UF	25WV	
C240			CC73FSL1H152J	CHIP C	1500PF	J	
C241			CE04EW1H010M	ELECTRO	1.0UF	50WV	
C300,301			CC73FCH1H101J	CHIP C	100PF	J	
C302			CC73GCH1H101J	CHIP C	100PF	J	

Ref. No.	Address	New parts	Parts No.	Description			Destination
C303,304			CC73FCH1H101J	CHIP C	100PF	J	
C305			CC73GCH1H101J	CHIP C	100PF	J	
C306,307			CC73FCH1H101J	CHIP C	100PF	J	
C308			CC73GCH1H101J	CHIP C	100PF	J	
C309,310			CC73FCH1H101J	CHIP C	100PF	J	
C312,313			CC73FCH1H101J	CHIP C	100PF	J	
C314			CC73GCH1H101J	CHIP C	100PF	J	
C315			CC73FCH1H101J	CHIP C	100PF	J	
C316-320			CK73FB1H102K	CHIP C	1000PF	K	
C321			CC73FSL1H471J	CHIP C	470PF	J	
C326,327			CK73GB1H102K	CHIP C	1000PF	K	
C330-333			CK73FB1H102K	CHIP C	1000PF	K	
C334			CK73GB1E223K	CHIP C	0.022UF	K	
C335			CC73GCH1H331J	CHIP C	330PF	J	
C336-340			CK73GB1E223K	CHIP C	0.022UF	K	
C341			CK73FF1E104Z	CHIP C	0.10UF	Z	
C342			CC73FSL1H152J	CHIP C	1500PF	J	
C343			CK73FB1H562K	CHIP C	5600PF	K	
C344			CK73GB1H472K	CHIP C	4700PF	K	
C345			CK73GB1E223K	CHIP C	0.022UF	K	
C346-348			CC73FCH1H101J	CHIP C	100PF	J	
C349,350			CK73FF1E104Z	CHIP C	0.10UF	Z	
C351			CK73GB1E223K	CHIP C	0.022UF	K	
C355			CE04NW1C100M	ELECTRO	10UF	16WV	
C356			CE04EW1HR47M	ELECTRO	0.47UF	50WV	
C357			CE04EW1C100M	ELECTRO	10UF	16WV	
C358-361			CK73FB1H103K	CHIP C	0.010UF	K	
C363			CK73GB1H103K	CHIP C	0.010UF	K	
C364			C90-2045-05	ELECTRO	2.2UF	25WV	
C365-375			CK73FB1H471K	CHIP C	470PF	K	
C376			CK73GB1E223K	CHIP C	0.022UF	K	
C377-379			CK73FB1H471K	CHIP C	470PF	K	
C381,382			CK73FB1H103K	CHIP C	0.010UF	K	
C383			CK73GB1H102K	CHIP C	1000PF	K	
C384			CK73FB1H102K	CHIP C	1000PF	K	
C385			CK73GB1H103K	CHIP C	0.010UF	K	
C386			CK73FB1H103K	CHIP C	0.010UF	K	
C387			CK73GB1H103K	CHIP C	0.010UF	K	
C388			CK73FB1H471K	CHIP C	470PF	K	
C389,390			CK73GB1H471K	CHIP C	470PF	K	
C391-394			CK73FB1H103K	CHIP C	0.010UF	K	
C395			CK73GB1H103K	CHIP C	0.010UF	K	
C400			CC73FSL1H471J	CHIP C	470PF	J	
C401			CK73FB1H103K	CHIP C	0.010UF	K	
C402			C90-2167-05	ELECTRO	100UF	16WV	
CN1			E40-3239-05	PIN CONNECTOR (4P)			
CN3			E40-3239-05	PIN CONNECTOR (4P)			
CN4			E40-3242-05	PIN CONNECTOR (7P)			
CN5		*	E40-5747-05	PIN CONNECTOR (11P)			
CN6			E40-3243-05	PIN CONNECTOR (8P)			
CN7			E40-5736-05	FLAT CABLE CONNECTOR (26P)			
CN8		*	E40-5740-05	FLAT CABLE CONNECTOR (20P)			
CN9			E40-3240-05	PIN CONNECTOR (5P)			
CN10			E40-3238-05	PIN CONNECTOR (3P)			
CN11		*	E40-5741-05	FLAT CABLE CONNECTOR (8P)			
CN12			E40-3237-05	PIN CONNECTOR (2P)			
CN13			E04-0191-05	RF COAXIAL CABLE SOCKET			
CN14-16			E02-2015-05	SOCKET FOR IC			
CN17			E40-5067-05	PIN CONNECTOR (10P)			

PARTS LSIT

TX-RX UNIT (X57-4620-00)

Ref. No.	Address	New parts	Parts No.	Description	Destination
J1			E11-0455-05	PHONE JACK (3.5D)	
J2			E11-0431-05	PHONE JACK	
J4			E63-0401-05	PHONO JACK	
J5			E06-1352-05	DIN SOCKET	
J6			E11-0455-05	PHONE JACK (3.5D)	
J7		*	E58-0428-05	SUB PLUG (D) 9P	
W1		*	E37-0536-05	LEAD WIRE WITH MINIPIN PLUG	
A1	4G	*	F01-1005-04	HEAT SINK	
A2	4F		F11-1127-04	SHIELDING CASE	
A3,4	4G		G02-0574-04	FLAT SPRING	
A5	4G		G02-0719-04	FLAT SPRING	
CF1,2			L72-0374-05	CERAMIC FILTER (455KHZ)	
CF3			L72-0366-05	CERAMIC FILTER (455KHZ)	
L1			L40-2285-48	SMALL FIXED INDUCTOR (220NH)	
L2			L40-4785-48	SMALL FIXED INDUCTOR	
L3			L40-1011-15	SMALL FIXED INDUCTOR	
L4		*	L34-4397-05	COIL	
L5			L40-1011-15	SMALL FIXED INDUCTOR	
L8		*	L40-4711-15	SMALL FIXED INDUCTOR	
L9			L40-1011-15	SMALL FIXED INDUCTOR	
L10			L40-1092-12	SMALL FIXED INDUCTOR	
L11-17			L40-1011-15	SMALL FIXED INDUCTOR	
L18			L40-1001-15	SMALL FIXED INDUCTOR	
L19,20		*	L39-1245-05	COIL	
L21		*	L40-2711-33	SMALL FIXED INDUCTOR	
L22,23			L40-2201-12	SMALL FIXED INDUCTOR	
L24,25			L40-1092-12	SMALL FIXED INDUCTOR	
L26			L40-1001-15	SMALL FIXED INDUCTOR	
R1			RK73FB2A103J	CHIP R 10K J 1/10W	
R2,3			RK73GB1J103J	CHIP R 10K J 1/16W	
R4-6			RK73GB1J101J	CHIP R 100 J 1/16W	
R7			RK73FB2A103J	CHIP R 10K J 1/10W	
R8			RK73GB1J682J	CHIP R 6.8K J 1/16W	
R9			RK73GB1J222J	CHIP R 2.2K J 1/16W	
R10			RK73GB1J330J	CHIP R 33 J 1/16W	
R11			RK73GB1J183J	CHIP R 18K J 1/16W	
R12			RK73FB2A103J	CHIP R 10K J 1/10W	
R13			RK73GB1J101J	CHIP R 100 J 1/16W	
R16			RK73GB1J680J	CHIP R 68 J 1/16W	
R17,18			RK73FB2A222J	CHIP R 2.2K J 1/10W	
R19			RK73GB1J101J	CHIP R 100 J 1/16W	
R21-24			RK73FB2A103J	CHIP R 10K J 1/10W	
R50			RK73GB1J682J	CHIP R 6.8K J 1/16W	
R51			RK73FB2A104J	CHIP R 100K J 1/10W	
R52			RK73GB1J392J	CHIP R 3.9K J 1/16W	
R53			RK73GB1J221J	CHIP R 220 J 1/16W	
R54			RK73GB1J152J	CHIP R 1.5K J 1/16W	
R55,56			RK73GB1J103J	CHIP R 10K J 1/16W	
R57			RK73GB1J334J	CHIP R 330K J 1/16W	
R58			RK73GB1J470J	CHIP R 47 J 1/16W	
R59			RK73GB1J151J	CHIP R 150 J 1/16W	
R60			RK73GB1J152J	CHIP R 1.5K J 1/16W	
R61			RK73GB1J333J	CHIP R 33K J 1/16W	
R62			RK73GB1J223J	CHIP R 22K J 1/16W	
R63			RK73GB1J102J	CHIP R 1.0K J 1/16W	
R64,65			RK73GB1J470J	CHIP R 47 J 1/16W	
R66			RK73GB1J221J	CHIP R 220 J 1/16W	

Ref. No.	Address	New parts	Parts No.	Description	Destination
R100			RK73FB2A100J	CHIP R 10 J 1/10W	
R101			RK73GB1J472J	CHIP R 4.7K J 1/16W	
R103			RK73GB1J102J	CHIP R 1.0K J 1/16W	
R104			RK73GB1J472J	CHIP R 4.7K J 1/16W	
R105			RK73GB1J102J	CHIP R 1.0K J 1/16W	
R106			RK73GB1J154J	CHIP R 150K J 1/16W	
R109			RK73GB1J102J	CHIP R 1.0K J 1/16W	
R110			RK73GB1J223J	CHIP R 22K J 1/16W	
R111			RK73GB1J222J	CHIP R 2.2K J 1/16W	
R113			RK73GB1J104J	CHIP R 100K J 1/16W	
R114			RK73GB1J472J	CHIP R 4.7K J 1/16W	
R117			RK73GB1J823J	CHIP R 82K J 1/16W	
R118			RK73GB1J222J	CHIP R 2.2K J 1/16W	
R119,120			RK73GB1J223J	CHIP R 22K J 1/16W	
R121,122			RK73GB1J123J	CHIP R 12K J 1/16W	
R123			RK73GB1J223J	CHIP R 22K J 1/16W	
R124			RK73GB1J103J	CHIP R 10K J 1/16W	
R126			RK73GB1J183J	CHIP R 18K J 1/16W	
R127,128			RK73GB1J103J	CHIP R 10K J 1/16W	
R129			RK73GB1J472J	CHIP R 4.7K J 1/16W	
R130			RK73GB1J223J	CHIP R 22K J 1/16W	
R131			RK73GB1J101J	CHIP R 100 J 1/16W	
R132			RK73GB1J472J	CHIP R 4.7K J 1/16W	
R133			RK73GB1J103J	CHIP R 10K J 1/16W	
R134,135			RK73GB1J152J	CHIP R 1.5K J 1/16W	
R136			RK73GB1J331J	CHIP R 330 J 1/16W	
R137			RK73FB2A102J	CHIP R 1.0K J 1/10W	
R138			RK73GB1J152J	CHIP R 1.5K J 1/16W	
R139			RK73GB1J223J	CHIP R 22K J 1/16W	
R140			RK73GB1J470J	CHIP R 47 J 1/16W	
R141			RK73GB1J392J	CHIP R 3.9K J 1/16W	
R142,143			RK73GB1J222J	CHIP R 2.2K J 1/16W	
R144			RK73GB1J101J	CHIP R 100 J 1/16W	
R145			RK73GB1J472J	CHIP R 4.7K J 1/16W	
R146,147			RK73GB1J101J	CHIP R 100 J 1/16W	
R148			RK73GB1J471J	CHIP R 470 J 1/16W	
R149			RK73GB1J101J	CHIP R 100 J 1/16W	
R150			RK73GB1J471J	CHIP R 470 J 1/16W	
R151			RK73GB1J472J	CHIP R 4.7K J 1/16W	
R152			RK73GB1J152J	CHIP R 1.5K J 1/16W	
R153,154			RK73GB1J331J	CHIP R 330 J 1/16W	
R155			RK73GB1J222J	CHIP R 2.2K J 1/16W	
R156			RK73GB1J332J	CHIP R 3.3K J 1/16W	
R157			RK73GB1J222J	CHIP R 2.2K J 1/16W	
R158,159			RK73GB1J472J	CHIP R 4.7K J 1/16W	
R160			RK73GB1J103J	CHIP R 10K J 1/16W	
R161			RK73GB1J222J	CHIP R 2.2K J 1/16W	
R162,163			RK73GB1J331J	CHIP R 330 J 1/16W	
R164			RK73GB1J222J	CHIP R 2.2K J 1/16W	
R165			RK73GB1J331J	CHIP R 330 J 1/16W	
R166			RK73GB1J392J	CHIP R 3.9K J 1/16W	
R167			RK73GB1J472J	CHIP R 4.7K J 1/16W	
R168			RK73GB1J100J	CHIP R 10 J 1/16W	
R169			RK73GB1J471J	CHIP R 470 J 1/16W	
R170			RK73GB1J101J	CHIP R 100 J 1/16W	
R171,172			RK73FB2A100J	CHIP R 10 J 1/10W	
R173			RK73GB1J101J	CHIP R 100 J 1/16W	
R174			RK73GB1J123J	CHIP R 12K J 1/16W	
R175			RK73FB2A123J	CHIP R 12K J 1/10W	

PARTS LIST

TX-RX UNIT (X57-4620-00)

Ref. No.	Address	New parts	Parts No.	Description	Destination
R176			RK73FB2A183J	CHIP R 18K J 1/10W	
R177			RK73GB1J183J	CHIP R 18K J 1/16W	
R178			RK73FB2A153J	CHIP R 15K J 1/10W	
R179			RK73GB1J103J	CHIP R 10K J 1/16W	
R180			RK73GB1J821J	CHIP R 820 J 1/16W	
R181			RK73GB1J222J	CHIP R 2.2K J 1/16W	
R182			RK73GB1J103J	CHIP R 10K J 1/16W	
R183			RK73FB2A153J	CHIP R 15K J 1/10W	
R184			RK73GB1J272J	CHIP R 2.7K J 1/16W	
R185			RK73GB1J153J	CHIP R 15K J 1/16W	
R186			RK73FB2A222J	CHIP R 2.2K J 1/10W	
R187			RK73GB1J223J	CHIP R 22K J 1/16W	
R188			RK73GB1J101J	CHIP R 100 J 1/16W	
R189,190			RK73GB1J153J	CHIP R 15K J 1/16W	
R191,192			RK73GB1J222J	CHIP R 2.2K J 1/16W	
R193,194			RK73GB1J223J	CHIP R 22K J 1/16W	
R196			RK73FB2A472J	CHIP R 4.7K J 1/10W	
R197			RK73GB1J103J	CHIP R 10K J 1/16W	
R198,199			RK73GB1J104J	CHIP R 100K J 1/16W	
R200			RK73FB2A101J	CHIP R 100 J 1/10W	
R201			RK73GB1J221J	CHIP R 220 J 1/16W	
R202,203			RK73GB1J104J	CHIP R 100K J 1/16W	
R204			RK73GB1J222J	CHIP R 2.2K J 1/16W	
R205			RK73GB1J272J	CHIP R 2.7K J 1/16W	
R206			RK73GB1J224J	CHIP R 220K J 1/16W	
R207			RK73GB1J222J	CHIP R 2.2K J 1/16W	
R208			RK73GB1J123J	CHIP R 12K J 1/16W	
R209			RK73GB1J563J	CHIP R 56K J 1/16W	
R215			RK73GB1J681J	CHIP R 680 J 1/16W	
R220			RK73GB1J103J	CHIP R 10K J 1/16W	
R300			RK73FB2A100J	CHIP R 10 J 1/10W	
R301			RK73GB1J101J	CHIP R 100 J 1/16W	
R303-319			RK73GB1J101J	CHIP R 100 J 1/16W	
R320			RK73GB1J102J	CHIP R 1.0K J 1/16W	
R323			RK73GB1J101J	CHIP R 100 J 1/16W	
R325			RK73FB2A473J	CHIP R 47K J 1/10W	
R330			RK73GB1J470J	CHIP R 47 J 1/16W	
R331			RK73GB1J102J	CHIP R 1.0K J 1/16W	
R332			RK73GB1J222J	CHIP R 2.2K J 1/16W	
R334			RK73GB1J331J	CHIP R 330 J 1/16W	
R335			RK73GB1J101J	CHIP R 100 J 1/16W	
R336			RK73GB1J102J	CHIP R 1.0K J 1/16W	
R337,338			RK73GB1J124J	CHIP R 120K J 1/16W	
R339,340			RK73GB1J334J	CHIP R 330K J 1/16W	
R343			RK73GB1J471J	CHIP R 470 J 1/16W	
R344			RK73FB2A2R2J	CHIP R 2.2 J 1/10W	
R345-347			RK73GB1J101J	CHIP R 100 J 1/16W	
R348,349			RK73GB1J473J	CHIP R 47K J 1/16W	
R350,351			RK73FB2A473J	CHIP R 47K J 1/10W	
R352-354			RK73GB1J473J	CHIP R 47K J 1/16W	
R355			RK73GB1J103J	CHIP R 10K J 1/16W	
R356			RK73GB1J473J	CHIP R 47K J 1/16W	
R357			RK73GB1J103J	CHIP R 10K J 1/16W	
R358			RK73GB1J473J	CHIP R 47K J 1/16W	
R359			RK73GB1J101J	CHIP R 100 J 1/16W	
R364,365			RK73GB1J222J	CHIP R 2.2K J 1/16W	
R366			R92-1252-05	CHIP R 0 OHM	
R367,368			RK73FB2A473J	CHIP R 47K J 1/10W	
R369			RK73GB1J473J	CHIP R 47K J 1/16W	

Ref. No.	Address	New parts	Parts No.	Description	Destination
R371-374			RK73GB1J473J	CHIP R 47K J 1/16W	
R376			RK73GB1J473J	CHIP R 47K J 1/16W	
R377,378			RK73FB2A473J	CHIP R 47K J 1/10W	
R379			RK73GB1J473J	CHIP R 47K J 1/16W	
R380-418			RK73FB2A103J	CHIP R 10K J 1/10W	
R419-428			RK73GB1J101J	CHIP R 100 J 1/16W	
R429			RK73FB2A103J	CHIP R 10K J 1/10W	
R430			RK73GB1J472J	CHIP R 4.7K J 1/16W	
R431,432			RK73GB1J103J	CHIP R 10K J 1/16W	
R433			RK73GB1J102J	CHIP R 1.0K J 1/16W	
R434			RK73GB1J470J	CHIP R 47 J 1/16W	
R435,436			RK73GB1J472J	CHIP R 4.7K J 1/16W	
VR1,2			R12-6732-05	TRIMMING POT. 470	
VR3			R12-6742-05	TRIMMING POT. 22K	
D1-4			RLS73	DIODE	
D5			1SV166	DIODE	
D7			DAP202K	DIODE	
D8			RLS73	DIODE	
IC1,2		*	DSP56002FC40	IC	
IC3		*	MBCG24173-6173	IC (GATE ARRAY)	
IC4		*	27C256PCJJTC-K	IC	
IC5		*	27C256PCJJUC-K	IC	
IC6		*	27C256PCJJVC-K	IC	
IC7		*	MCM56824AFN20	IC	
IC7		*	MCM56824AFN25	IC	
IC9		*	7032LC44JLQA	IC	
IC15			MB86001PF	IC	
IC16			AK4318-VS	IC	
IC17			NJM2100M	IC (OP AMPLIFIER)	
IC18			MC74HC4053F	IC (ANALOG SW)	
IC19-21			NJM4560M	IC (OP AMP X2)	
IC22		*	AD822AR	IC	
IC23			MC74HC4052F	IC (HPF)	
IC24			NJM2100M	IC (OP AMPLIFIER)	
IC25			AK5340-VS	IC (AD CONVERTER (18 Bit))	
IC26			M62363FP	IC (8bit D/A CONVERTER)	
IC27			AK4318-VS	IC	
IC28			NJM2100M	IC (OP AMPLIFIER)	
IC29			M51131L	IC (ELECTRO VOLUME)	
IC30			NJM2100M	IC (OP AMPLIFIER)	
IC31			M51131L	IC (ELECTRO VOLUME)	
IC33			LA4422	IC (AF POWER AMP/ 5.8W)	
IC34			PCM69AU	IC (18bit D/A CONVERTOR)	
IC35		*	AD822AR	IC	
IC36			NJM4560M	IC (OP AMP X2)	
IC37,38			UPC7805H	IC (VOLTAGE REGULATOR/ +5V)	
IC39			NJM78L05UA	IC (VOLTAGE REGULATOR/ +5V)	
IC40			NJM78L08UA	IC (VOLTAGE REGULATOR/ +8V)	
IC41,42			NJM3404AM	IC (OP AMP X2)	
IC43			NJM5532M	IC (OP AMP)	
IC44			TC7S04F	IC (2CH NAND GATE)	
Q1			DTC124EK	DIGITAL TRANSISTOR	
Q2,3			2SC2714(Y)	TRANSISTOR	
Q4			DTC124EK	DIGITAL TRANSISTOR	
Q5-7			2SC3324(G)	TRANSISTOR	
Q8			2SK210(GR)	FET	
Q9,10			2SC2714(Y)	TRANSISTOR	
Q12			2SC2712(Y)	TRANSISTOR	
Q13-17			2SC2412K(S)	TRANSISTOR	

PARTS LSIT

TX-RX UNIT (X57-4620-00)
VCO2 (X58-3390-03)

Ref. No.	Address	New parts	Parts No.	Description	Destination
Q22			DTC124EK	DIGITAL TRANSISTOR	
Q23			2SC2712(Y)	TRANSISTOR	
Q25			DTA143EK	DIGITAL TRANSISTOR	
Q26			DTC124XK	DIGITAL TRANSISTOR	
Q27			DTC143EK	DIGITAL TRANSISTOR	
VCO2 (X58-3390-03)					
-			B42-2437-04	S/NO LABEL	
C1			CK73FB1H102K	CHIP C 1000PF K	
C2			CC73FSL1H101J	CHIP C 100PF J	
C3			CC73FCH1H070D	CHIP C 7.0PF D	
C4			CC73FCH1H070D	CHIP C 7.0PF D	
C4			CC73FCH1H220J	CHIP C 22PF J	
C6			CC73FCH1H180J	CHIP C 18PF J	
C7			CC73FCH1H120J	CHIP C 12PF J	
C8,9			CK73FB1H102K	CHIP C 1000PF K	
C10			CC73FCH1H010C	CHIP C 1.0PF C	
C11			CK73FB1H102K	CHIP C 1000PF K	
TC1			C05-0331-15	TRIMMER CAPACITOR 10PF	
TP1-3			E23-0464-05	TERMINAL	
-			F11-1085-04	SHIELDING CASE	
			F11-1086-14	SHIELDING COVER	
-			G13-0904-04	CUSHION (COVER)	
L1			L33-0690-05	CHOKE COIL (3.3UH)	
L2			L34-2353-05	COIL	
1	2F		N30-2604-41	PAN HEAD MACHIN SCREW	
R1			RK73FB2A682J	CHIP R 6.8K J 1/10W	
R2			RK73FB2A271J	CHIP R 270 J 1/10W	
R3			RK73FB2A330J	CHIP R 33 J 1/10W	
R4,5			RK73FB2A472J	CHIP R 4.7K J 1/10W	
R6			RK73FB2A471J	CHIP R 470 J 1/10W	
R7			RK73FB2A560J	CHIP R 56 J 1/10W	
D1			1SV164	DIODE	
Q1			2SK508NV(K52)	FET	
Q2			2SC2714(Y)	TRANSISTOR	

EXPLODED VIEW

H	M3 x 6 (F)	: N32-3006-46
I	M3 x 6 (OC)	: N33-3006-41
J	M2.6 x 6 (Br-Tap)	: N87-2606-46
K	M3 x 6 (Br-Tap)	: N87-3006-46
M	M2.6 x 8 (F-Tap)	: N88-2608-46
P	M3 x 10 (TP-T)	: N91-3010-46

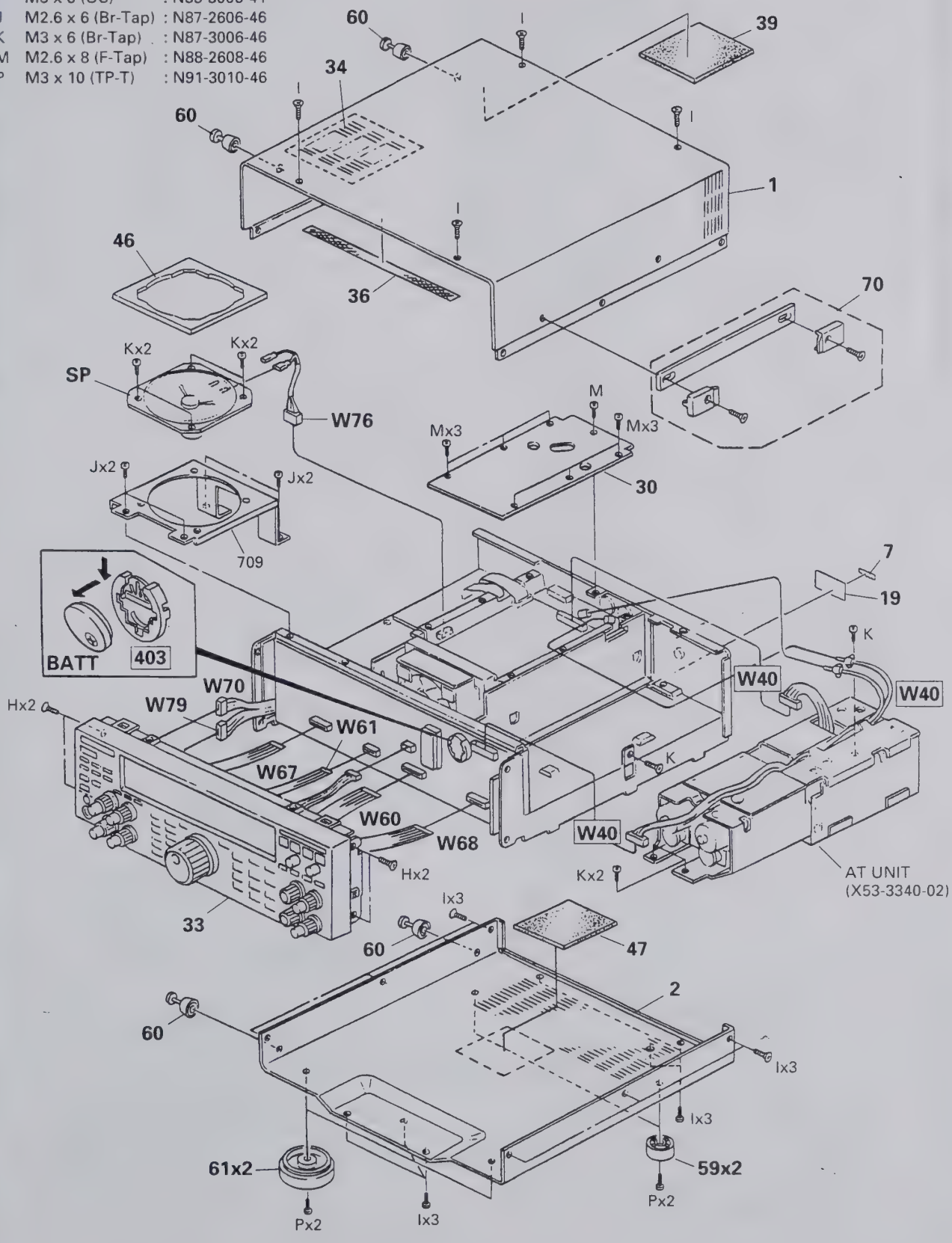

Parts with the exploded numbers larger than 700 are not supplied.

EXPLODED VIEW

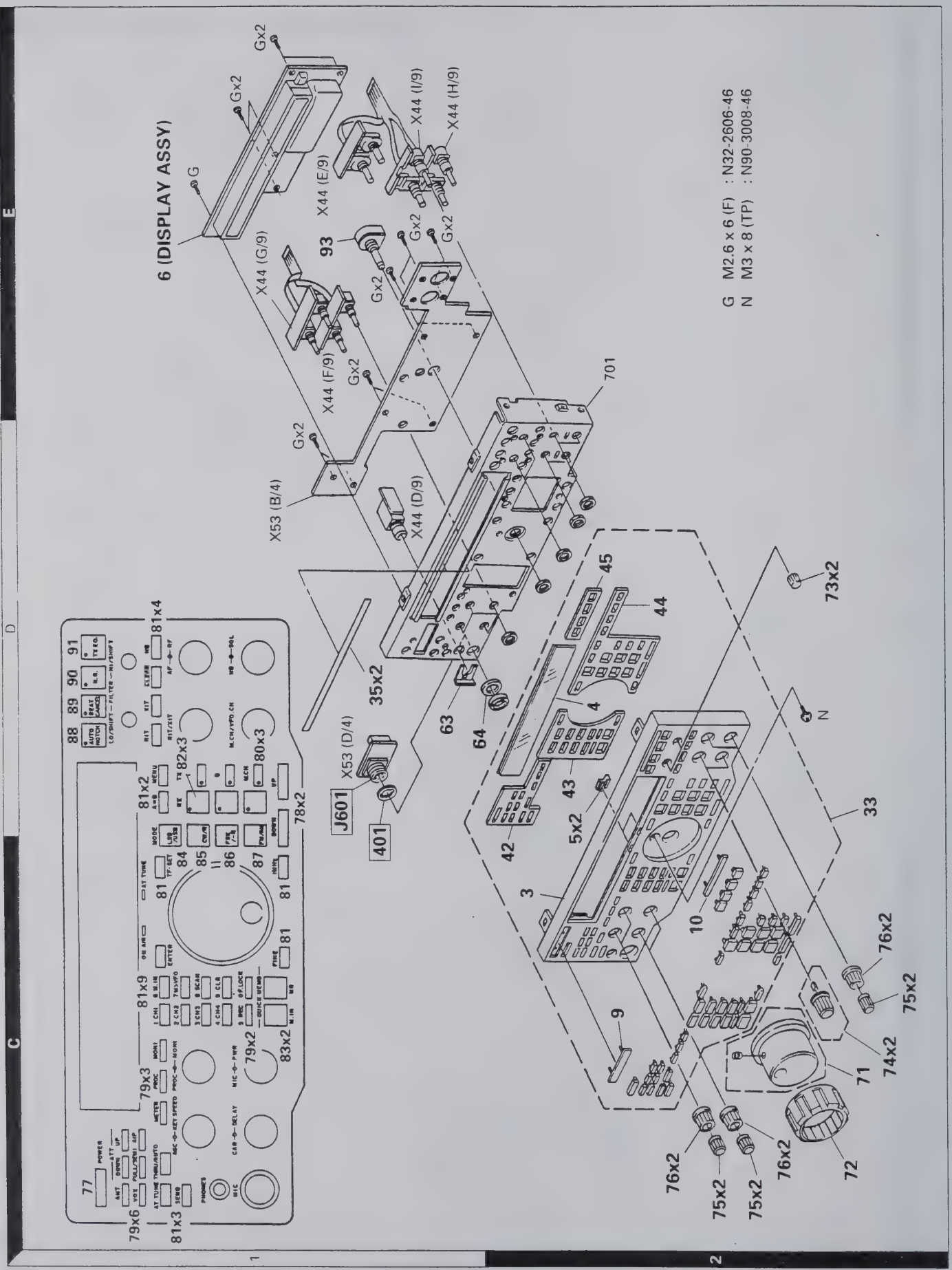

Parts with the exploded numbers larger than 700 are not supplied.

EXPLODED VIEW

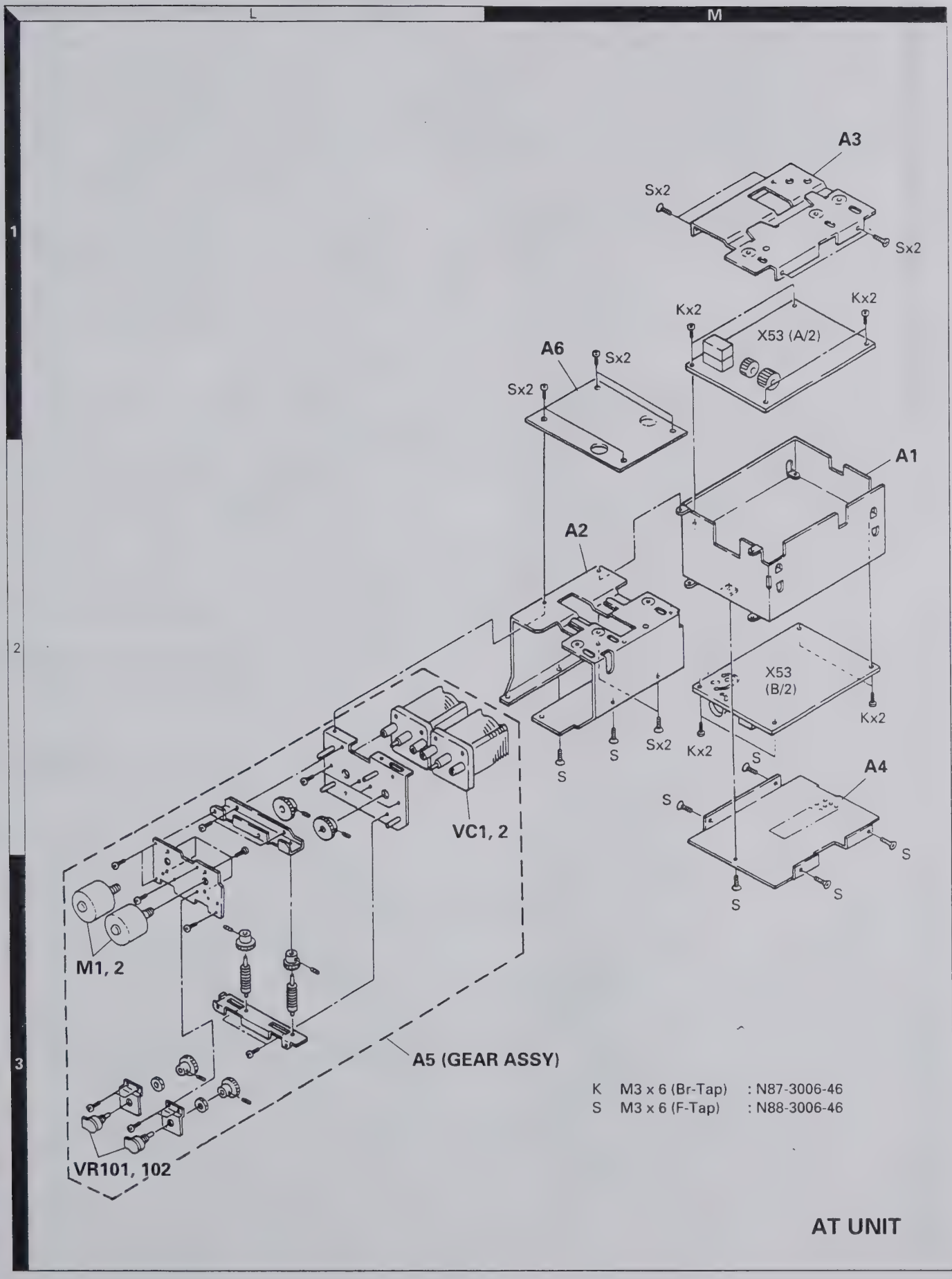

PACKING

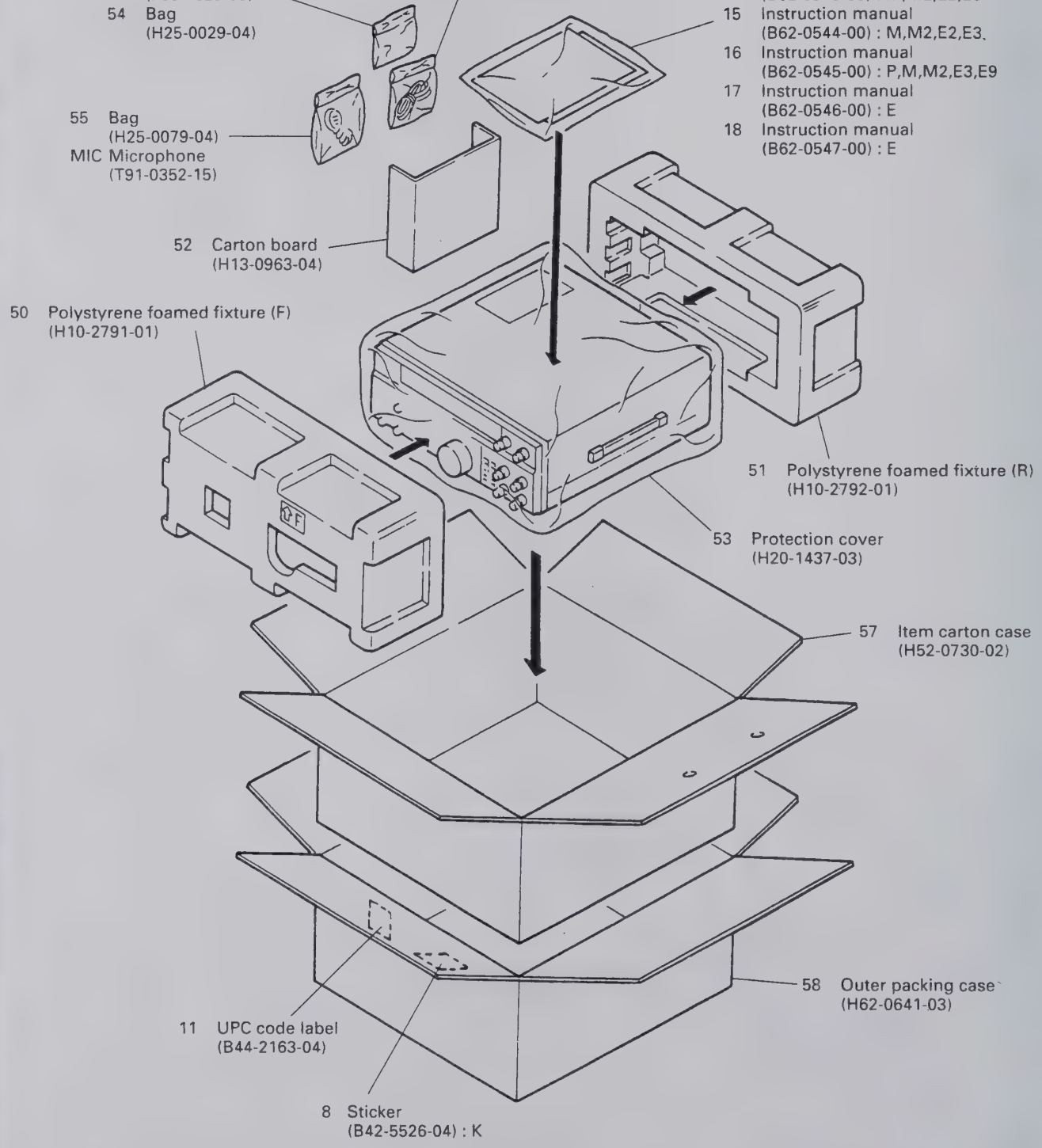
21 DIN plug (7P)
(E07-0751-05)
22 DIN plug (13P)
(E07-1351-05)
26 Fuse (25A/32V)
(F05-2531-05)
27 Fuse (4A/250V)
(F06-4029-05)
54 Bag
(H25-0029-04)
24 DC cord
(E30-3157-15)
with Fuse (25A/32V)
(F05-2531-05)
56 Bag
(H25-0708-04)
12 Warranty card
(B46-0310-03) : E,E2,E3,E9
(B46-0410-40) : K
(B46-0422-00) : P
13 Instruction manual
(B62-0542-00)
14 Instruction manual
(B62-0543-00) : M,M2,E2,E3
15 Instruction manual
(B62-0544-00) : M,M2,E2,E3
16 Instruction manual
(B62-0545-00) : P,M,M2,E3,E9
17 Instruction manual
(B62-0546-00) : E
18 Instruction manual
(B62-0547-00) : E
55 Bag
(H25-0079-04)
MIC Microphone
(T91-0352-15)
52 Carton board
(H13-0963-04)
50 Polystyrene foamed fixture (F)
(H10-2791-01)
51 Polystyrene foamed fixture (R)
(H10-2792-01)
53 Protection cover
(H20-1437-03)
57 Item carton case
(H52-0730-02)
58 Outer packing case
(H62-0641-03)
11 UPC code label
(B44-2163-04)
8 Sticker
(B42-5526-04) : K

ADJUSTMENT

Required Test Equipment

1. DC Voltmeter (DC V.M)
1) Input resistance : More than 1MΩ
2) Voltage range : 1.5 to 1000V AC/DC
Note : A high-recision multimeter may be used. However, accurate readings can not be obtained for high-impedance circuits.

2. DC Ammeter
1) Current range : 100mA, 1.5A, 15A, high-precision ammeter may be used.

3. RF VTVM (RF V.M)
1) Input impedance : 1MΩ and less than 3pF, min.
2) Voltage range : 10mV to 300V
3) Frequency range : 10kHz to 500MHz

4. AF Voltmeter (AF V.M)
1) Frequency range : 50Hz to 10kHz
2) Input resistance : 1MΩ or greater
3) Voltage range : 10mV to 30V

5. AF Generator (AG)
1) Frequency range : 200Hz to 5kHz
2) Output : 1mV or less to 1V, low distortion

6. AF Dummy Load (DM. SP)
1) Impedance : 8Ω
2) Dissipation : 3W or greater

7. Oscilloscope
Requires high sensitivity, and external synchronization capability (150MHz or greater).

8. Sweep Generator (Sweep G.)
1) Center frequency : 50kHz to 90MHz
2) Frequency deviation : Maximum ±35kHz
3) Output voltage : 100mV or greater

9. Standard Signal Generator (SSG)
1) Frequency range : 50kHz to 50MHz
2) Output : –133dBm/0.05μV to 7dBm/500mV
3) Output impedance : 50Ω
4) AM and FM modulation can be possible
Note : Generator must be frequency stable.

10. Frequency Counter (f. counter)
1) Minimum input voltage : 50mV
2) Frequency range : 150MHz or greater

11. Noise Generator (Noise G.)
Must generate ignition noise containing harmonics beyond 30MHz.

12. RF Dummy Load
1) Impedance : 150Ω and 50Ω
2) Dissipation : 150W or greater

13. Linear Detector
1) Frequency range : 30MHz

14. Power Meter
1) Impedance : 50Ω
2) Dissipation : 300W continuous or greater
3) Frequency limits : 60MHz or greater

15. Spectrum Analyzer
1) Frequency range : 100kHz to 110MHz or greater
2) Bandwidth : 1kHz to 3MHz

16. Detector
1) For adjustment of BPF

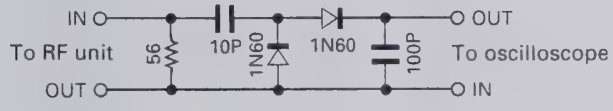

2) For adjustment of PLL/VCO BPF

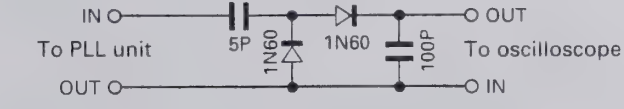

17. Directional Coupler

18. Monitor Receiver
R-1000 class

19. Microphone
MC-43S or MC-60S8

20. Tracking Generator

21. Distortion Meter

22. Double Signal Pad (50Ω)

ADJUSTMENT

Preparation

Unless otherwise specified, knobs and switches should be set as follows.

POWER	ON	PROCESSOR	Center
ATT	0	MIC	Center
AGC	Center	PWR	MAX
NB LEVEL	Center	CAR	Center
SQL	0		
AF	0		
RF	MAX		

Front Panel

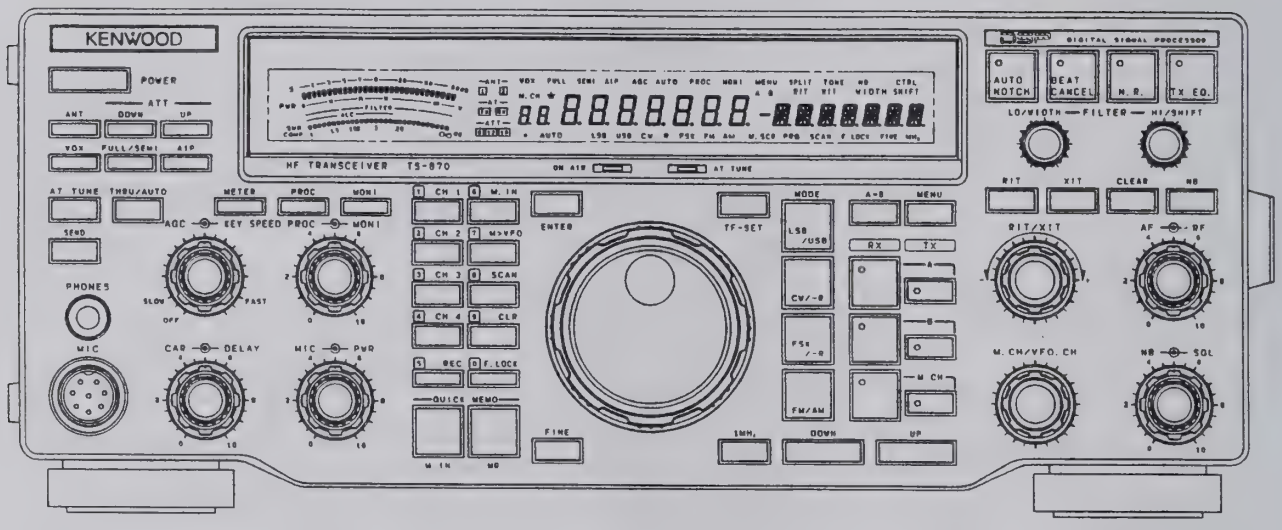

Rear Panel

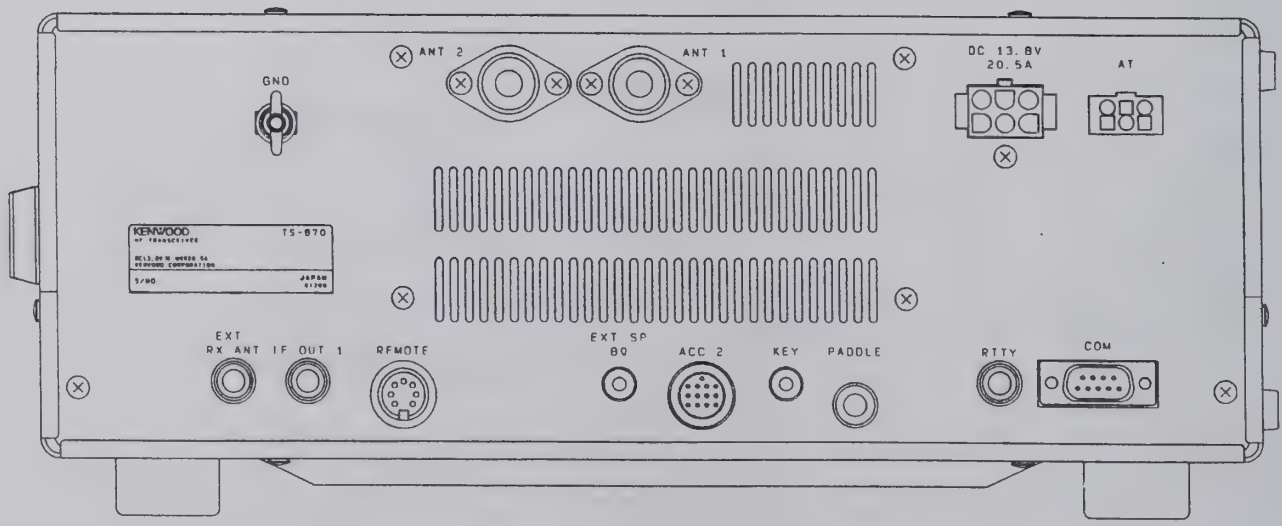

ADJUSTMENT

Service Jig

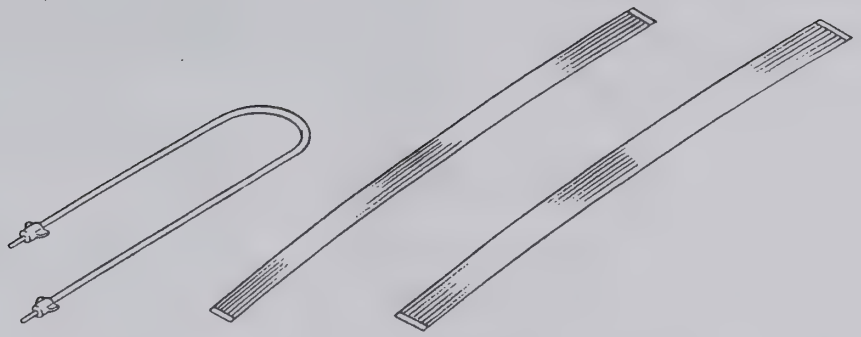

A. Lead wire with minipin plug
(E37-0064-05)
About 27cm

B . Flat cable (8P)
(E37-0581-05)
About 25cm

C. Flat cable (12P)
(E37-0580-05)
About 25cm

How to Use

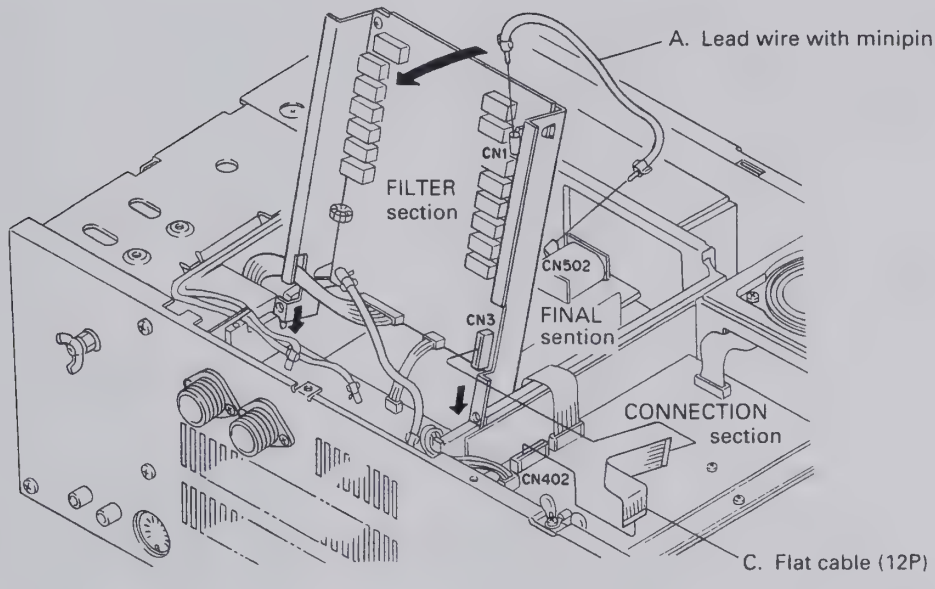

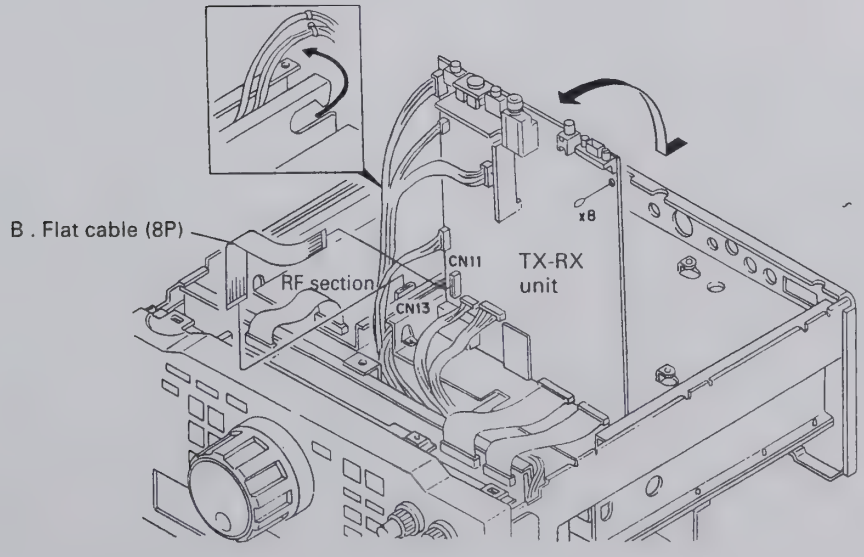

ADJUSTMENT

Service Adjustment Mode

■ Outline

- The TS-870S is adjusted by the normal method and by another method using the service adjustment mode.
- In the adjustment mode, there are 28 menu numbers A0 to BB. All adjustment data items are saved in the EEPROM.
- When the service adjustment mode is entered, data is read from the EEPROM and placed in the CPU RAM so that settings can be modified.
- The EEPROM is updated only when data is written in Menu No. BA.

  Note : Transmission is possible in reception-related adjustment modes.

■ Operation procedure

1. Adjustment mode start
   Hold down the [N.R.] key and [LSB/USB] key, and turn the [POWER] switch ON to enter the adjustment mode. The menu number will appear in M. CH on the display.
2. Adjustment mode menu number selection
   When the [M. CH/VFO. CH] control is turned, the menu number changes.
3. Adjustment mode data writing
   Press the [UP]/[DOWN] key or the microphone [UP]/[DOWN] key in MENU No. BA.
4. Adjustment mode cancel
   When the [CLR] key is pressed, the normal memory-channel display returns.

   Note : If the power is switched OFF in the adjustment mode, it is canceled.

Service Adjustment Mode Menu

Menu No.	Adjustment function	Description
A0	System	Checksum display (Program version confirmation)
A1	ALC	ALC reference voltage adjustment
A2	S-meter (SSB)	Start level setting
A3		S9 level setting
A4		Full-scale level setting
A5	Filter	8.83MHz IF filter center frequency correction
A6		455kHz IF filter center frequency correction
A7	Power adjustment	100W adjustment (With power meter curve)
A8		50W adjustment (With power meter curve)
A9		25W adjustment (With power meter curve)
AA		10W adjustment (With power meter curve)
AB	TX gain	1.9MHz band
AC		3.5MHz band
AD		7MHz band
AE		10MHz band
AF		14MHz band
B0		18MHz band
B1		21MHz band
B2		24.5MHz band
B3		29MHz band
B4	ALC meter	Stare level setting
B5		Maximum zone level setting
B6		Full-scale level setting
B7	SWR protection	Protection operation setting
B8	SWR meter	VSWR=3 level setting
B9	FM	FM deviation setting
BA	System	Writing into EEPROM
BB	Display	All LCD segments light (Not light ON AIR lamp)

ADJUSTMENT

Display Check

Item	Condition	Measurement			Adjustment			Specifications/Remarks
		Test-equipment	Unit	Terminal	Unit	Parts	Method	
1. All reset	1) DC IN : DC 13.8V Pushing [A=B] key down, [POWER] : ON.				Front panel	Display	After displaying HELLO, the display is reset as follows: DISP f. : 14.000.00 MODE : USB METER : ALC ANT : 1 AGC	Display should be normal Should be at the reset frequency.
2. All LCD segments light	1) Menu No. : BB						Check	All LCD segments light.

PLL Section

Item	Condition	Measurement			Adjustment			Specifications/Remarks
		Test-equipment	Unit	Terminal	Unit	Parts	Method	
1. 20MHz frequency adj.	1) [POWER] : ON MODE : FM Receive	f. counter	PLL	CN510 (TP)	PLL	TC800	Frequency adjust.	20.000MHz ± 20Hz
2. 20MHz peak adj.	1) Display f. : 14.000MHz MODE : USB Receive	RF V.M		CN503		L528	MAX.	
3. 60MHz BPF adj.	1) MODE : FM Receive			IC506 2 pin		L529 L530	Repeat for MAX.	
4. 55MHz BPF adj. and frequency check	1) Display f. : 14.000MHz MODE : FM Receive			IC508 11 pin		L518 L519 L520	Repeat for MAX.	
	2) Display f. : 14.000MHz	f. counter					Frequency check	55.299~55.301MHz
5. Lock voltage adj. & check VCO1	1) Display f. : 30kHz	DC V.M		TP501	PLL	TC506	1.8V	1.8 ± 0.03V
	2) Display f. : 7.489MHz						Voltage check	4.5~7.0V
6. Lock voltage adj. & check VCO2	1) Display f. : 7.500MHz				PLL	TC507	1.8V	1.8 ± 0.03V
	2) Display f. : 14.489MHz						Voltage check	4.5~7.0V
7. Lock voltage adj. & check VCO3	1) Display f. : 14.490MHz				PLL	TC508	1.8V	1.8 ± 0.03V
	2) Display f. : 21.489MHz						Voltage check	4.5~7.0V
8. Lock voltage adj. & check VCO4	1) Display f. : 21.490MHz				PLL	TC509	1.8V	1.8 ± 0.03V
	2) Display f. : 30.000MHz						Voltage check	4.5~7.0V
9. Lock voltage adj. LO2A (VCO2) X58-3390-03	1) Display f. : 30.000MHz			TP502	VCO2 X58-3390	TC1	5.0V	5.0 ± 0.03V

ADJUSTMENT

Item	Condition	Measurement			Adjustment			Specifications/Remarks
		Test-equipment	Unit	Terminal	Unit	Parts	Method	
10. Output level check LO1 (CN504)	1) Display f. : 14.000MHz MODE : USB Receive Meaturement condition : 50Ω terminated			CN504			Output level check	–5~+2dBm
LO2A (CN505)				CN505				–1~+6dBm (64.220MHz)
LO3 (CN502)				CN502				–6~+0dBm (8.375MHz)
20MHz (CN503)				CN503				–10~+0dBm (20.0000MHz)
LO4 (CN501)		Oscilloscope		CN501				–10~+0dBm (10.0kHz)
11. 20MHz frequency (Final check)	1) MODE : USB Receive	f. counter		CN510 (TP)	PLL	TC800	Check	20.000MHz ± 20Hz

Receiver Section

Item	Condition	Measurement			Adjustment			Specifications/Remarks
		Test-equipment	Unit	Terminal	Unit	Parts	Method	
1. DSP PLL lock voltage adj.	1) Display f. : 14.000MHz MODE : USB	DC V.M	TX-RX	TP1	TX-RX	L4	3.50V	±0.1V
2. AGC voltage adj.	1) Display f. : 14.000MHz MODE : CW [RF] GAIN : MAX [AGC] : OFF			TP2		VR2	3.00V	±0.1V
3. MCF adj.	1) Display f. : 14.000MHz MODE : USB [AGC] : OFF Spectrum analyzer setting Center f. : 73.050MHz Frequency span : 50kHz ATT : –10dBm VBW, RBW : 1kHz V.REF : 2dB/DIV	Spectrum analyzer Tracking generator	RF	CN16 CN17	RF	L65 L67 L70 L72	Adjust so that gain is max. and band shown at right becomes flat.	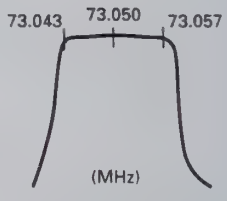
4. BPF adj.	1) Display f. : 7.000MHz MODE : USB [AGC] : OFF [AIP] : OFF Spectrum analyzer setting Center f. : 7.100MHz Frequency span : 2MHz	Spectrum analyser Tracking generator	Rear panel RF	ANT CN15	RF	L28 L29 L30 L31	Waveform is as shown in the figure at the right.	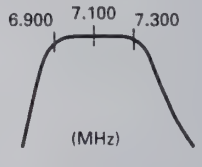
	2) Display f. : 14.000MHz Spectrum analyzer setting Center f. : 14.000MHz Frequency span : 5MHz					L38 L39 L40		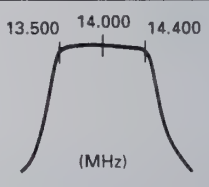
	3) Display f. : 21.000MHz Spectrum analyzer setting Center f. : 21.200MHz Frequency span : 10MHz					L44 L45 L46		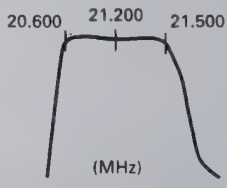

ADJUSTMENT

Item	Condition	Measurement			Adjustment			Specifications/Remarks
		Test-equipment	Unit	Terminal	Unit	Parts	Method	
(28MHz BPF adj.)	1) Display f. : 29.800MHz MODE : USB [AGC] : FAST SSG frequency : 22.101MHz SSG output : –113dBm	SSG AF V.M Oscilloscope DM. SP	Rear panel	ANT EXT. SP	RF	L50 L52	Adjust so that the gain is MAX.	MAX
5. RX IF AMP adj.	1) Display f. : 14.100MHz MODE : USB [AGC] : OFF [AIP] : OFF AF output : 0.63V/8Ω SSG frequency : 14.101MHz SSG output : –119dBm	SSG AF V.M Oscilloscope DM. SP	Rear panel	ANT EXT. SP	RF Connec-tion	L75 L77 L451 L452 L458	Repeat 2~3 times for MAX AF output reading.	
• Item 6 to 10 below are adjusted in the adjustment mode. To terminate the adjustment menu in the middle, save your settings with Menu No. BA.								
6. Checksum check	1) Menu No. : A0				Front panel	Display	Check	Display : E7b9
7. ALC voltage adj.	1) Menu No. : A1	DC V.M	RF	TP2	Front panel	[RIT/XIT] knob	2.70V	±0.02V
8. S-meter adj.	1) Menu No. : A2 SSG frequency : 14.101MHz SSG output : –110dBm	SSG AF V.M Oscilloscope DM. SP	Rear panel	ANT EXT. SP	TX-RX	VR1	Display : 05	±02
S1	2) Menu No. : A2 SSG output : –107dBm				Front panel	[UP] key	[UP] key : Push once time	Reference display : 12±06
S9	3) Menu No. : A3 SSG output : –81dBm							Reference display : 45±10
Full-scale	4) Menu No. : A4 SSG output : –23dBm							Reference display : 80±20
9. 8.83MHz IF filter adj.	1) Menu No. : A5 SSG1 f. : 1.79980MHz SSG1 output : –60dBm SSG2 f. : 1.80260MHz SSG2 output : –60dBm	SSG1 SSG2 Double signal pad Oscilloscope (10:1 probe)	Rear panel Connec-tion	ANT TP401	Front panel	[RIT/XIT] knob	The waveforms must cross.	OK 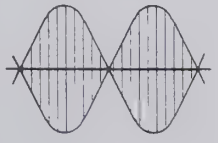
10. 455kHz IF filter adj.	1) Menu No. : A6			TP402				NG 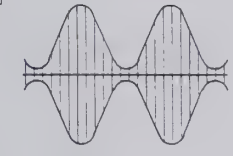

• Writing data : After items 6 to 10 have been adjusted:
1) Menu No. : BA
2) [UP] key : Push once time Display "rEAdy" → "good" (If "nG" is displayed, enter data again.)
3) [CLR] key : Push once time (Adjustment mode terminated)

ADJUSTMENT

Item	Condition	Measurement			Adjustment			Specifications/Remarks
		Test-equipment	Unit	Terminal	Unit	Parts	Method	
11. ATT check	1) Display f. : 14.100MHz SSG frequency : 14.101MHz SSG output : –107dBm [AGC] : OFF [AIP] : OFF AF output : 1V/8Ω	SSG AF V.M Oscilloscope DM. SP	Rear panel	ANT EXT. SP	Front panel	ATT SW (UP/DOWN)	AF output should be lowered 6dB at time.	AF output ± 3dB
	a. ATT : 0dB						1.0V	ATT display : None
	b. ATT [UP] key : 6dB						0.5V	ATT display : 6
	c. ATT [UP] key : 12dB						0.25V	ATT display : 12
	d. ATT [UP] key : 18dB						0.125V	ATT display : 18
	e. ATT [DOWN] key : 12dB						0.25V	ATT display : 12
	f. ATT [DOWN] key : 6dB						0.5V	ATT display : 6
	g. ATT [DOWN] key : 0dB						1.0V	ATT display : None
12. S/N check	1) Display f. : Indicated below AF VR : 0.63V/8Ω SSG f. : Indicated below However, USB : +1kHz LSB : –1kHz	SSG AF V.M Oscilloscope Distortion meter DM. SP	Rear panel	ANT EXT. SP				Note : If the frequency is 7.5MHz or less, AIP turns ON automatically. Turn AIP OFF with the AIP switch before starting measurement.
	Frequency / MODE / SSG output / SSG MOD / DEV							
	100kHz AM –87dBm 1kHz 60%						S/N measurement	10dB or more.
	1.500MHz AM –77dBm 1kHz 60%							
	1.8MHz LSB –119dBm OFF OFF						MAX sensitivity measurement	0.7V/8Ω or more.
	3.5MHz LSB –119dBm OFF OFF							
	5.5MHz LSB –119dBm OFF OFF							
	7.1MHz LSB –119dBm OFF OFF							
	10.1MHz USB –119dBm OFF OFF							
	12.5MHz USB –119dBm OFF OFF							
	14.1MHz USB –119dBm OFF OFF ←						[AIP] : ON	Sensitivity down 5~15dB.
	18.1MHz USB –119dBm OFF OFF							
	21.1MHz USB –119dBm OFF OFF							
	24.8MHz USB –123dBm OFF OFF							
	29.8MHz USB –123dBm OFF OFF							
	29.8MHz FM –119dBm 1kHz 3kHz ←						SINAD sentitivity measurement	12dB SINAD or more.
13. SSB squelch check	1) Display f. : 14.100MHz MODE : USB [AGC] : OFF SSG frequency : 14.101MHz SSG output : OFF	SSG AF V.M Oscilloscope DM. SP	Rear panel	ANT EXT. SP	Front panel	[SQL] VR	Set to the point noise disappeared.	Knob position 10 : 00~14 : 00
	2) SSG output : –101dBm						Check	Squelch should open.
	3) [SQL] VR : Fully clockwise							Squelch should close.
	4) SSG output : –83dBm							Squelch should open.
14. FM squelch check	1) Display f. : 29.8MHz MODE : FM SSG output : OFF				Front panel	[SQL] VR	Set o the point noise disappeared.	Knob position 8 : 00~12 : 00
	2) SSG output : –119dBm SSG MOD : 1kHz SSG DEV : 3kHz						Check	Squelch should open.
	3) [SQL] VR : Fully clockwise							Squelch should close.
	4) SSG output : –100dBm							Squelch should open.

ADJUSTMENT

Item	Condition	Measurement			Adjustment			Specifications/Remarks
		Test-equipment	Unit	Terminal	Unit	Parts	Method	
15. NB adj.	1) Display f. : 14.100MHz MODE : USB SSG frequency : 14.101MHz SSG output : –90dBm	SSG AF V.M Oscilloscope DM. SP DC V.M	Rear panel RF	ANT EXT. SP TP1	RF	L81 L82	Voltage minimum	
	2) [NB] key : ON [NB] VR : Center	Noise G.	Rear panel	ANT			Adjust output of noise generator to small input (S1) and large input (S9) and check each.	Noise should disappear.
16. S-meter check	1) Display f. : 14.175MHz MODE : USB [AGC] : FAST [RF] GAIN : MAX SSG frequency : 14.176MHz SSG output : –107dBm	SSG AF V.M Oscilloscope DM. SP	Rear panel	ANT EXT. SP	Front panel	Display	S-meter level : S1	–111~–101dBm
	2) SSG output : –83dBm						S-meter level : S9	–89~–77dBm
	3) [NB] key : ON						S-meter level check	Same as when [NB] key off.
17. Auto notch check	1) Display f. : 14.175MHz MODE : USB SSG frequency : 14.1765MHz SSG output : –73dBm [AUTO NOTCH] key : Push (ON)	SSG	Rear panel	ANT	Front panel	Display	S-meter level check	S-meter off.
18. Voice check (equipped on VS-2)	1) [AF] VR : Arbitrary [MENU] key : Push (ON) [M.CH/VFO.CH] knob : Menu No. 48 [UP] key : Step 73 [MENU] key : Push (OFF) [FINE] key : Push (ON)						Check	The displayed frequency can be heard vocally.

Transmitter Section

Item	Condition	Measurement			Adjustment			Specifications/Remarks
		Test-equipment	Unit	Terminal	Unit	Parts	Method	
1. TX MCF adj.	1) Display f. : 14.200MHz MODE : USB Transmit Spectrum analyzer setting TG output : –10dBm Center f. : 8.83MHz Span : 10kHz V.REF : 2dB/DIV	Tracking generator Spectrum analyzer	RF	CN10 TP3	RF	L100	MAX.	
2. TX IF AMP adj.	1) Display f. : 14.200MHz MODE : CW [CAR] VR : Center Disconnect CN4 from the RF unit and connect a 50Ω dummy load. Transmit	50Ω dummy Oscilloscope	RF	CN4	RF Connection	L99,98 L95,94 L92,91 L89 VR3 L457 L456 L455	Repeat 2 or 3 times for MAX.	Reference value 2.5Vp-p or more
	2) After adjustment, set [CAR] VR to MAX for confirmation.							

ADJUSTMENT

Item	Condition	Measurement			Adjustment			Specifications/Remarks
		Test-equipment	Unit	Terminal	Unit	Parts	Method	
3. Final base current	1) Display f. : 14.200MHz MODE : USB [MIC] VR : MIN [CAR] VR : MIN Final unit VR501,502 : MIN Connect ammeter + : External power supply – : Power connector Adjust to minimum current with VR501 and VR502 in the final unit. Transmit	Ammeter			Final	VR501	Current drain (Minimum current) +250mA	First adjust VR501 and VR502 for minimum. Adjust VR501 for an increase of 250mA when switched to TX. Then adjust VR502 for 250mA over this reading.
						VR502	Current drain (Minimum current) + driver current (250mA) + 250mA.	
• Item 4 to 13 below are adjusted in the adjustment mode. To terminate the adjustment menu in the middle, save your settings with Menu No. BA.								
4. ALC adj.	1) Menu No. : A7 Transmit	Power meter	Rear panel	ANT	Front panel	[RIT/XIT] knob	100W	±5.0W
5. NULL adj	1) Menu No. : A7 Transmit	Power meter DC V.M	Rear panel Filter	ANT CN5	Filter	TC1	MIN.	Reference value 0.5V or less
6. ALC frequency response adj.	1) TX [M.CH] key : Push Display f. : 29.700MHz MODE : CW Transmit	Power meter	Front panel	ANT	Filter	VR1	95W	±5.0W
	2) TX [M.CH] key : Push Menu No. : A7 Transmit						100W power check	100W ± 5W When unable to be set within the range, ALC and frequency response to be adjusted.
7. TX power adj The power meter on the display is also calibrat--ed at the same time.	1) 50W Menu No. : A8 Transmit After adjustment, [UP] key : Push	Power meter	Rear panel	ANT	Front panel	[RIT/XIT] knob	50W	±3.0W
	2) 25W Menu No. : A9 Transmit After adjustment, [UP] key : Push						25W	±2.0W
	3) 10W Menu No. : AA Transmit After adjustment, [UP] key : Push						11W	±2.0W
8. TX gain adj	1) 1.9MHz band Menu No. : AB Transmit	Power meter	Rear panel	ANT	Front panel	[UP] key	Press the [UP] key after the beep sounds for two or three seconds.	
	2) 3.5MHz band Menu No. : AC Transmit							
	3) 7.0MHz band Menu No. : AD Transmit							
	4) 10.1MHz band Menu No. : AE Transmit							
	5) 14.1MHz band Menu No. : AF Transmit							

ADJUSTMENT

Item	Condition	Measurement			Adjustment			Specifications/Remarks
		Test-equipment	Unit	Terminal	Unit	Parts	Method	
	6) 18.0MHz band Menu No. : B0 Transmit	Power meter	Rear panel	ANT	Front panel	[UP] key	Press the [UP] key after the beep sounds for two or three seconds.	
	7) 21.0MHz band Menu No. : B1 Transmit							
	8) 24.9MHz band Menu No. : B2 Transmit							
	9) 29.7MHz band Menu No. : B3 Transmit							
9. ALC meter adj.	1) 1 dot Menu No. : B4 Transmit	Power meter	Rear panel	ANT	Front panel	[UP] key	[UP] key : Push	
	2) Zone MAX Menu No. : B5 Transmit							
	3) Full Menu No. : B6 Transmit							
10. SWR protection adj.	1) Nenu No. : B7 Transmit After adjustment, [UP] key : Push	Through type power meter 150Ωdummy	Rear panel	ANT	Front panel	[RIT/XIT] knob	40W	±3.0W
11. SWR meter adj.	1) Menu No. : B8 Transmit					[UP] key	[UP] key : Push	
12. FM DEV adj.	1) Menu No. : B9 AG output : 1kHz/30mV Transmit	Power meter Linear detector AG	Rear panel	ANT	Front panel	[RIT/XIT] knob	4.6kHz	±0.1kHz
13. FM MIC sense check	1) Menu No. : B9 AG output : 1kHz/3mV **E,X** AG output : 1kHz/5mV **K,P,M**		Front panel	MIC			Check	3.0kHz ± 0.5kHz
• Writing data : After items 4 to 13 have been adjusted: 1) Menu No. : BA 2) [UP] key : Push once time Display "rEAdy" → "good" (If "nG" is displayed, enter data again.) 3) [CLR] key : Push once time (Adjustment mode terminated)								
14. Spurious adj.	1) Display f. : 24.900MHz MODE : CW Transmit	Power meter Spectrum analyzer	Rear panel	ANT	RF	VR2	±1.65MHz spurious level MIN.	–60dB or less
15. Monitor level check	1) Display f. : 21.100MHz MODE : USB [MONI] key : ON [MONI] VR : Center [MIC] VR : Center [AF] VR : MIN AG output : 1kHz/10mV Transmit	Power meter AF V.M Oscilloscope DM. SP AG AF V.M	Rear panel Front panel	ANT EXT. SP MIC	Front panel	Display	Check	0.2V ± 0.05V

ADJUSTMENT

Item	Condition	Measurement			Adjustment			Specifications/Remarks
		Test-equipment	Unit	Terminal	Unit	Parts	Method	
16. Processor check	1) Display f. : 14.200MHz MODE : USB [MIC] VR : Center [PROC] key : ON [METER] : COMP AG output : 1kHz/10mV	Power meter AG AF V.M	Rear panel Front panel	ANT MIC	Front panel	Display	Check	COMP meter : 15~25dB
	2) AG output : 1kHz/1mV							COMP meter : 1dot light
17. Sidetone check	1) Display f. : 14.200MHz MODE : CW [MONI] VR : Center Key down	AF V.M Oscilloscope DM. SP Electronic keyer jig	Rear panel	EXT. SP KEY			Check	0.63V ± 0.3V
18. CW break-in check	1) Display f. : 14.200MHz MODE : CW [VOX] key : ON [FULL/SEMI] key : FULL	Power meter Oscilloscope Electronic keyer jig	Rear panel	ANT KEY			Electronic keyer jig : Key down	Full break-in operation (When the key is turned OFF, the receive mode returns immediately.)
	2) [FULL/SEMI] key : SEMI [DELAY] knob : Center							Semi break-in operation (When the key is turned OFF, the receive mode returns after a while.)
19. DRU check (equipped on DRU-3)	1) Connect a microphone to the MIC jack. MODE : USB/LSB [MIC] VR : Center [REC] key : Push						Hold down the [CH1], and talk into the microphone.	Can be recorded for about 15 seconds.
							Release and press the [CH1] key again.	The recorded voice must be played back.
20. Sub tone check	1) Display f. : 29.100MHz MODE : FM MIC jack : 600Ω terminated [A=B], [TX-B] key : Push [M.IN] key : Push two times [RX-M.CH] : Push Transmit	Power meter Linear detector Oscilloscope f. counter Microphone	Rear panel Front panel	ANT MIC			Check	DEV : ±0.5~1.0kHz Tone f. : 88.2~88.7Hz
21. TX frequency check	1) Display f. : 29.100MHz MODE : CW Transmit							29.100.000MHz ± 145Hz
22. TX frequency characteristic check	1) Display f. : 14.200MHz MODE : USB/LSB MIC jack : Connect to AG AG output : 1kHz/5mV 400Hz/5mV 2.6kHz/5mV Transmit	Power meter Oscilloscope AG AF V.M	Rear panel Front panel	ANT MIC			a. Set AG to 1.0kHz and turn the [MIC] VR to set to 100W. b. Change the AG frequency and measure the difference between the power levels at 1.0kHz and at another frequency c. Take a measurement for each USB and LSB.	Within 6dB

ADJUSTMENT

Item	Condition	Measurement			Adjustment			Specifications/Remarks
		Test-equipment	Unit	Terminal	Unit	Parts	Method	
23. Processor check	1) Display f. : 14.200MHz MODE : USB [PROC] key : ON [METER] key : Push [PROC] VR : MIN MIC jack : Connect to AG AG output : 1.0kHz/1mV Transmit						Change [PROC] VR so that the first segment on the COMP meter lights.	
	2) AG output : 1.0kHz /10mV (20dB UP) Transmit						Check	COMP meter : within 15~25dB
24. AT	1) Display f. : Indicated below MODE : CW [METER] : SWR [THRU/AUTO] : AUTO Transmit After checked retuen to receive mode.	Through type power meter 150Ωdummy	Rear panel	ANT	Front panel	Display	Check	ON AIR LED light. AT TUNE LED light. When tuning completed, LEDs off.
	2) [AT TUNE] key : ON	Frequency 1.910MHz 3.500 3.700 7.000 10.100 14.000 18.100 21.000 24.900 29.700			AT	TC1	Note : When 29.700MHz and SWR 1.0 to 1.3, variiable capacitor has flutters so that it does not stop, adjust the TC1 at which SWR 1.2 or less is acceptable.	Begins AT tuning after entering the transmission state. This should stop within roughly 6 seconds. SWR : 1.2 or less Power : 70W or more

Adjustment Points

■ **Side view**

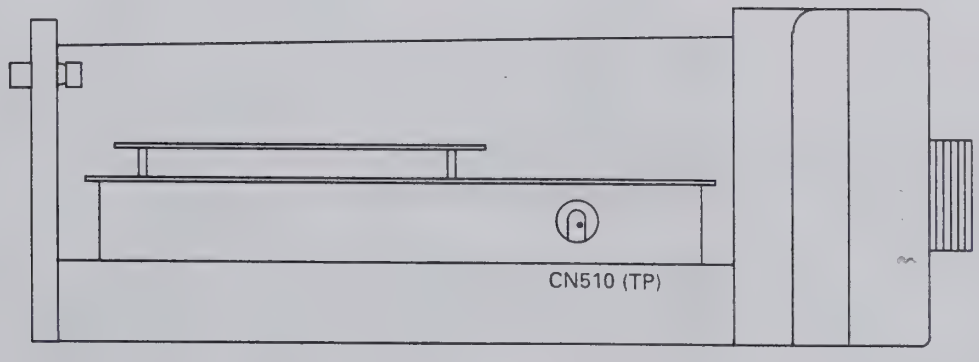

ADJUSTMENT

■ Upper view

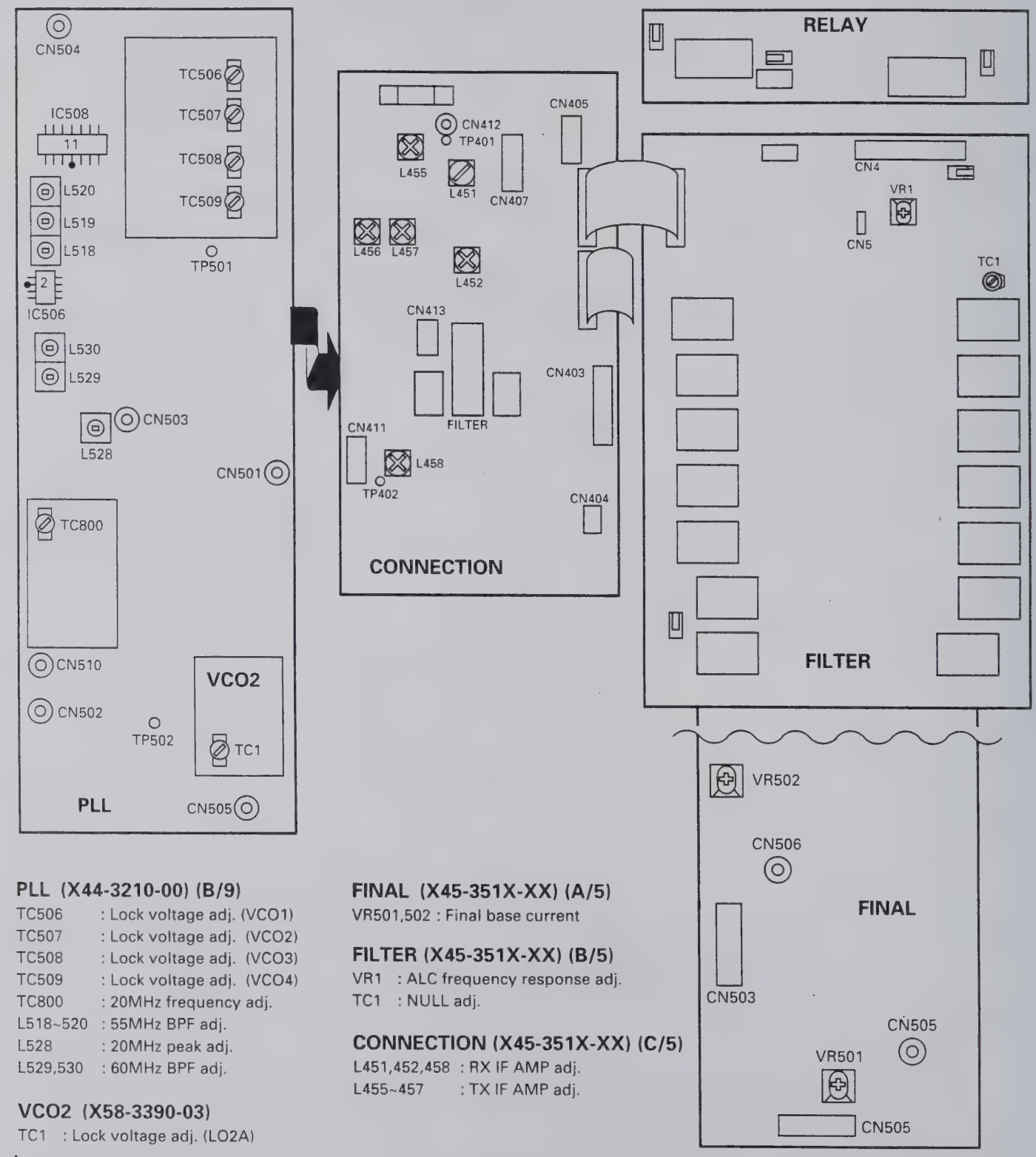

PLL (X44-3210-00) (B/9)

TC506 : Lock voltage adj. (VCO1)
TC507 : Lock voltage adj. (VCO2)
TC508 : Lock voltage adj. (VCO3)
TC509 : Lock voltage adj. (VCO4)
TC800 : 20MHz frequency adj.
L518~520 : 55MHz BPF adj.
L528 : 20MHz peak adj.
L529,530 : 60MHz BPF adj.

VCO2 (X58-3390-03)

TC1 : Lock voltage adj. (LO2A)

FINAL (X45-351X-XX) (A/5)

VR501,502 : Final base current

FILTER (X45-351X-XX) (B/5)

VR1 : ALC frequency response adj.
TC1 : NULL adj.

CONNECTION (X45-351X-XX) (C/5)

L451,452,458 : RX IF AMP adj.
L455~457 : TX IF AMP adj.

ADJUSTMENT

■ **Lower view**

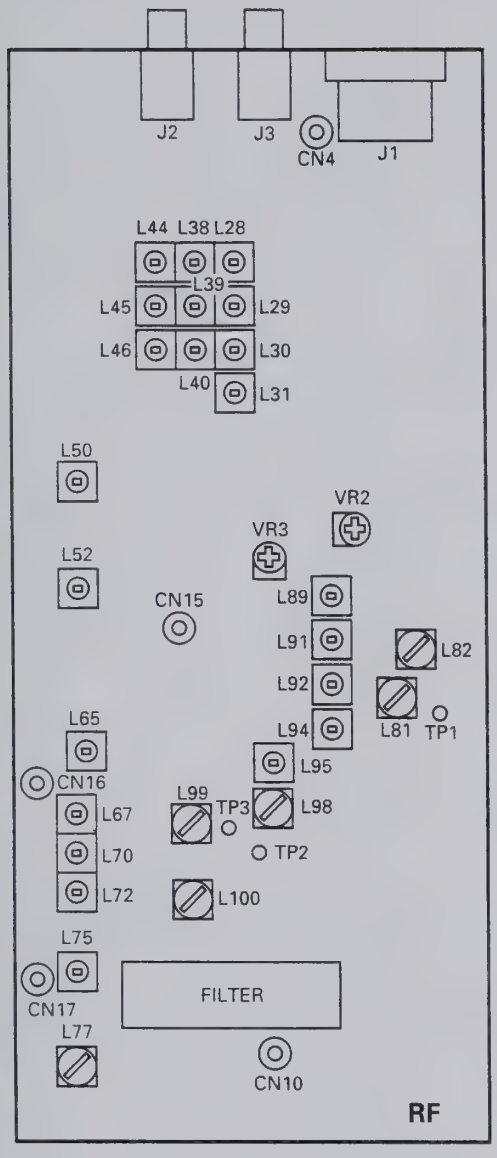

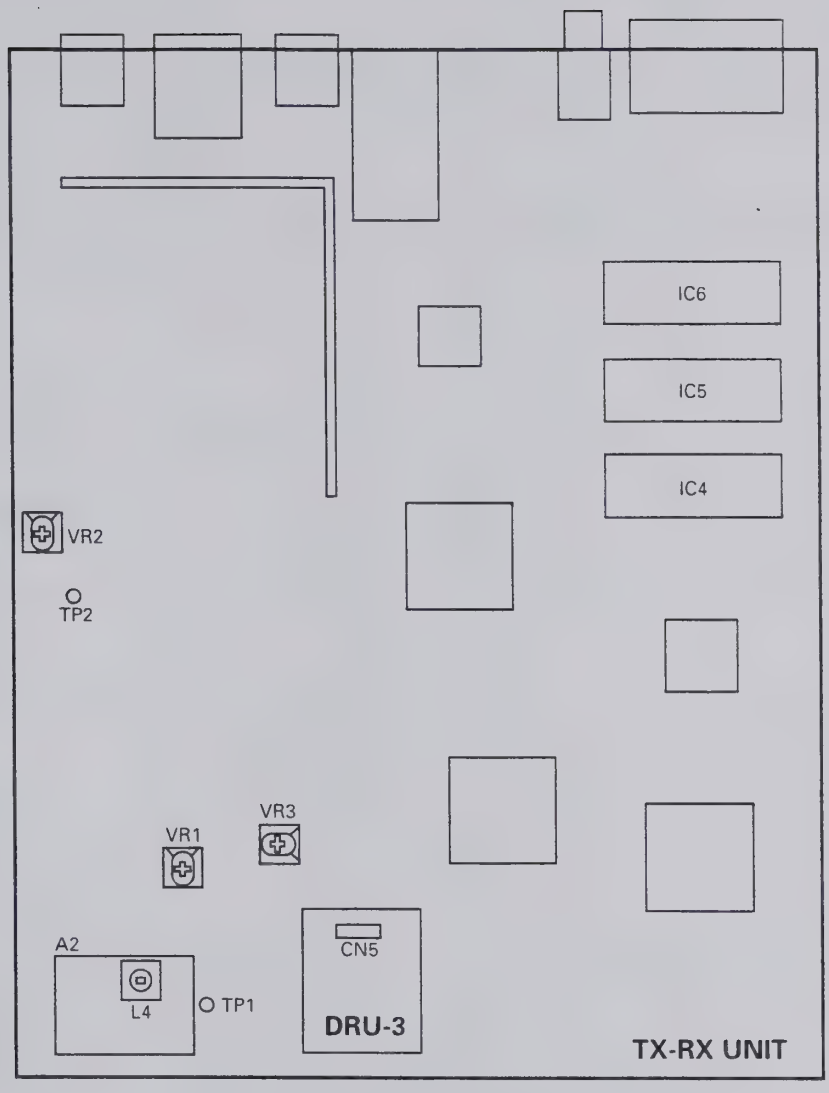

RF (X44-3210-00) (A/9)

VR2	: Spurious adj.
VR3,L89,91,92,94,95,98,99	: TX IF AMP adj.
L28~31,38~40,44~46,50,52	: BPF adj.
L65,67,70,72	: MCF adj.
L75,77	: RX IF AMP adj.
L81,82	: NB adj.
L100	: TX MCF adj.

TX-RX UNIT (X57-4620-00)

VR1	: S-meter adj.
VR2	: AGC voltage adj.
VR3	: DRU-3 recording level adj. (Adjusted to the mechanical center)
L4	: DSP PLL lock voltage adj.

TERMINAL FUNCTION

CN No.	Pin No.	Name	Function
RF UNIT (X44-3210-00) (A/9) : RF			
CN2	Coaxial	RAT	RX signal
CN4	Coaxial	DRV	TX drive signal
CN5	Coaxial	LO1	1st local oscillation 73.08~103.05MHz
CN6	Coaxial	LO2A	2nd local oscillation 64.22MHz
CN7	1	TXB	TX 8V
	2	RXB	RX 8V
	3	AGC	AGC voltage
CN10	Coaxial	TR88	RX IF output/TX IF input 8.83MHz
CN13	1	SPO	Speaker signal
	2	CKY	Keying signal
	3	AGC	AGC voltage
	4	TXC	TX : "H"
	5	RXC	RX : "H"
	6	8A	Analog 8V
	7	14S	14V-switched
	8	GND	GND
CN14	1	15K	Filter selection 15kHz
	2	3K	Filter selection 3kHz
	3	6K	Filter selection 6kHz
	4	VSF	Forward wave detection voltage
	5	VSF	Reflected wave detection voltage
	6	ALM	ALC meter output
	7	THP	Thermal protection
	8	NC	
	9	UCK2	RF serial/parallel convert clock
	10	UDA2	RF serial/parallel convert data
	11	ENR1	RF serial/parallel convertor IC1 enable
	12	ENR2	RF serial/parallel convertor IC2 enable
	13	ENR3	DAC enable
	14	NC	
	15	RBK	RF blank signal
	16	–6	–6V
	17	GND	GND
	18	NC	
	19	SS	TX/RX control signal TX : "L"
	20	NC	
J1	1	SPO	Speaker signal
	2	COM	Relay common terminal
	3	SS	TX/RX control signal
	4	MKE	TX relay close
	5	BRK	TX relay open
	6	ALC	ALC input
	7	RL	13V output when TX
J2		EXT RX	External receiver output
J3		IF OUT	SM-230
RF UNIT (X44-3210-00) (B/9) : PLL			
CN500	1	GND	GND
	2	NFMT	FM modulation on/off signal (FM TX : "L")
	3	VB3	21.489~30MHz } VCO select signal Active "H"
	4	VB2	14.489~21.489MHz
	5	VB1	7.489~14.489MHz
	6	VB0	0~7.489MHz
	7	UNL	Unlock detection output (Unlock : "H")
	8	GND	GND
	9	PLE2	PLL2 enable signal (LO2A)
	10	PLE1	PLL1 enable signal (LO1)
	11	PCK	Clock
	12	PDA	PLL, DDS data
	13	14D	14V
	14	DLE3	DDS3 enable signal (LO4)
	15	DLE2	DDS2 enable signal (LO3)
	16	DLE1	DDS1 enable signal (LO1)
	17	TXC	PLL DDS latch select signal (TX : "H")
	18	GND	GND
	19	9P	9V
	20	5P	5V
CN501	1	GND	GND
	2	LO4	DDS3 output
CN502	Coaxial	LO3	DDS2 output (8.375MHz)
CN503	Coaxial	REF	Reference signal output for TX-RX unit (20MHz)
CN504	Coaxial	LO1	LO1 output (73.08~103.05MHz)
CN505	Coaxial	LO2A	LO2A output (64.22MHz)
CN506	1	FMD	FM modulation signal
	2	GND	GND
	3	GND	GND
RF UNIT (X44-3210-00) (D/9) : PHONE			
CN901	1	SPI1	Phone jack through
	2	SPG	GND
	3	SPO1	Phone jack output
RF UNIT (X44-3210-00) (E, F, G, H, I/9) : VR			
CN903	1	DGND	Digital GND
	2	VPWR	MIC/PWR VR 1
	3	VMIC	MIC/PWR VR 2
	4	VDLY	CAR/DELAY VR 1
	5	VCAR	CAR/DELAY VR 2
	6	5D	5V
CN904	1	DGND	Digital GND
	2	VMON	PROC/MONI VR 1
	3	VPRC	PROC/MONI VR 2
	4	VKEY	AGC/KEY VR 1
	5	VAGC	AGC/KEY VR 2
	6	5D	5V
CN905	1	NC	
	2	WENB	Width encoder B
	3	WENA	Width encoder A
	4	SENB	Shift encoder B
	5	SENA	Shift encoder A
	6	GND	GND
CN906	1	GND	GND
	2	VRF	AF/RF VR 1
	3	VAF	AF/RF VR 2
	4	RENA	RIT encoder A
	5	RENB	RIT encoder B
	6	5D	5V
CN907	1	GND	GND
	2	VSQL	NB/SQL VR 1
	3	VNB	NB/SQL VR 2
	4	CENA	M.CH encoder A
	5	CENB	M.CH encoder B
	6	5D	5V
FINAL UNIT (X45-351X-XX) (A/5) : FINAL			
CN501	Coaxial	DRV	Drive input (From RF)
CN502	Coaxial	PO	TX signal output (To FILTER)
CN503	1	14S	13.8V
	2	14S	13.8V
	3	TXB	TX 13.8V
	4	GND	GND
	5	GND	GND
CN504	1	14V	13.8V
	2	14V	13.8V
	3	GND	GND

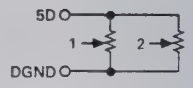

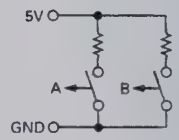

TERMINAL FUNCTION

CN No.	Pin No.	Name	Function
W501	Board	14F	Power supply 13.8V connecting harness
	In	14F	Power supply 13.8V connecting harness
		GND	Power supply 13.8V connecting harness
		GND	Power supply 13.8V connect ing harness
FIANL UNIT (X45-351X-XX) (B/5) : FILTER			
CN1	Coaxial	PO	Filter input signal
CN2	Coaxial	ATO	TX output signal (To AT)
CN3	1	8A	8V
	2	GND	GND
	3	GND	GND
	4	14S	14V
	5	14S	14V
	6	UCK2	Shift register clock
	7	UDA2	Shift register data
	8	ENF1	Shift register enable
	9	DGND	Digital GND
	10	TXB	TX power 8V
	11	VSF	Forward wave detection voltage
	12	VSR	Reflected wave detection voltage
CN4	1	ATA	Make for AT through/on relay
	2	28AT	24.5~30MHz
	3	25AT	21.5~24.5MHz
	4	18AT	18.5~21.5MHz
	5	14AT	14.5~18.5MHz
	6	10AT	10.5~14.5MHz
	7	7AT	4.0~7.5MHz
	8	4AT	2.5~4.0MHz
	9	GND	GND
	10	14S	14V
	11	GND	GND
W1	1	RL	TX/RX select signal output
	2	ANTS	ANT 1/2 select signal output
	3	GND	GND
FINAL UNIT (X45-351X-XX) (C/5) : CONNECTION			
CN401	1	15K	455kHz filter select "L" : Filter on
	2	3K	455kHz filter select "L" : Filter on
	3	6K	455kHz filter select "L" : Filter on
	4	TT	External AT tuning control (Pass through)
	5	TS	External AT tuning control (Pass through)
	6	UCK2	Pass through
	7	UDA2	Pass through
	8	ENF1	Pass through
	9	VSF	Pass through
	10	VSR	Pass through
	11	THP	Pass through
	12	14D	14V
	13	14D	14V
	14	14V	14V
	15	14V	14V
	16	PWS	Power switch on : "H"
	17	9P	PLL power 9V
	18	5P	PLL power 5V
	19	–6	–6V output
	20	GND	GND
CN402	1	8A	8V
	2	GND	GND
	3	GND	GND
	4	14S	13.8V
	5	14S	13.8V
	6	UCK2	Pass through
	7	UDA2	Pass through
	8	ENF1	Pass through
	9	DGND	Digital GND
	10	TXB	TX power 8V
	11	VSF	Pass through
	12	VSR	Pass through
CN403	1	14A	13.8V
	2	14S	13.8V
	3	8D	Digital 8V
	4	8A	Analog 8V
	5	APG	GND
	6	SPO3	Speaker output signal input
	7	SPG	Speaker GND
CN404	1	SPG	Speaker GND
	2	SP	Speaker output signal
CN405	1	14S	13.8V
	2	14S	13.8V
	3	AGND	Analog GND
	4	AGND	Analog GND
CN406	1	THP	Pass through
	2	TXB	Pass through
	3	14D	13.8V
	4	8D	Digital 8V
	5	14D	13.8V
	6	8A	Analog 8V
	7	GND	GND
	8	GND	GND
	9	14S	13.8V
	10	14S	13.8V
	11	14S	13.8V
	12	PSW	Power switch on : "H"
	13	14V	13.8V
CN407	1	14S	13.8V
	2	AGND	Analog GND
	3	TT	Pass through
	4	TS	Pass through
	5	GND	GND
CN410	Coaxial	LO3	Local LO3 8.375MHz (From PLL)
CN411	1	TIF	TX IF input
	2	GND	GND
	3	RIF	RX IF output
	4	GND	GND
CN412	Coaxial	TR88	8.83MHz
CN413	1	TXB	TX power 8V
	2	RXB	RX power 8V
	3	AGC	AGC line
FINAL UNIT (X45-351X-XX) (D/5) : AVR			
CN601	1	14V	13.8V
	2	14V	13.8V
	3	GND	GND
CN602	1	14S	13.8V
	2	14S	13.8V
	3	AGND	Analog GND
	4	AGND	Analog GND
CN603	1	THP	Thermal protection on : "H"
	2	TXB	TX 13.8V
	3	14D	13.8V
	4	8D	Digital 8V
	5	14D	Digital 13.8V
	6	8A	Analog 8V
	7	GND	GND
	8	GND	GND
	9	14S	13.8V
	10	14S	13.8V

AT coil tap band data

TERMINAL FUNCTION

CN No.	Pin No.	Name	Function
	11	14S	13.8V
	12	PSW	Power switch on : "H"
	13	14V	13.8V
CN604	1	14S	13.8V
	2	14S	13.8V
	3	TXB	TX 13.8V
	4	GND	GND
	5	GND	GND
CN605	1	MOT+	Moter drive +
	2	MOT –	Motor drive –
FINAL UNIT (X45-351X-XX) (E/5) : RELAY			
CN301	1	RL	TX/RX select signal input
	2	ANTS	ANT 1/2 select signal input
	3	GND	GND
CN302	Coaxial	ATO	TX signal input (From FILTER)
CN303	Coaxial	RAT	RX signal output (To RF)
CN304	Coaxial	AT1	Input/output to AT (RX : Output, TX : Input)
CN305	Coaxial	AT2	Input/output to AT (RX : Input, TX : Output)
CN306	TP		ANT1 GND
CN307	TP		ANT2 GND
W301	TP		ANT1 signal line
W303	TP		ANT2 signal line
AT UNIT (X53-3340-02)			
CN1	Coaxial	AT1	AT input
CN2	Coaxial	AT2	AT output
CN3	1	VRE	+5V reference voltage for A/D
	2	POD2	VC2 position detection, VR101 output
	3	GND	GND
	4	POD1	VC1 position detection, VR102 output
CN4	1	NC	
	2	M2–	Motor 2 drive –
	3	M2+	Motor 2 drive +
	4	M1–	Motor 1 drive –
	5	M1+	Motor 1 drive +
CN5	1	NC	
	2	F15	Power line 11~14V
	3	GND	GND
CN6	1	ATA	Make for AT through/on relay "L" : On
	2	NC	
CN7	1	ATG	GND for discriminating that is connected to microcomputer
	2	SPED	Motor speed control pulse
	3	APRE	Control selection "H" : Preset type, "L" : Auto tuning type
	4	VRE	+5V reference voltage for A/D
	5	PR22	Motor 2 control signal
	6	PR21	Motor 2 control signal
	7	POD2	VC2 position detection
	8	PR12	Motor 1 control signal
	9	PR11	Motor 1 control signal
	10	POD1	VC1 position detection
	11	GND	GND
CN101	1	28AT	24.5~30MHz
	2	15AT	21.5~24.5MHz
	3	NC	
	4	18AT	18.5~21.5MHz
	5	14AT	14.5~18.5MHz
	6	10AT	10.5~14.5MHz
	7	7AT	4.0~7.5MHz
	8	4AT	2.5~4.0MHz

AT coil tap band data

CN No.	Pin No.	Name	Function
	9	GND	GND
CONTROL UNIT (X53-356X-XX) (A/4) : CONTROL			
CN1	1	GND	GND
	2	NFMT	Not FM TX signal
	3	VB3	VCO selest signal
	4	VB2	VCO select signal
	5	VB1	VCO select signal
	6	VB0	VCO select signal
	7	UNL	PLL unlock signal
	8	GND	GND
	9	PLE2	PLL2 enable signal
	10	PLE1	PLL1 enable signal
	11	PCK	PLL serial clock
	12	PDA	PLL serial data
	13	14D	Digital 13.8V
	14	DLE3	DDS3 enable signal
	15	DLE2	DDS2 enable signal
	16	DLE1	DDS1 enable signal
	17	TXC	TX control signal
	18	GND	GND
	19	9P	PLL power 9V (Pass through)
	20	5P	PLL power 5V (Pass through)
CN2	1	GND	GND
	2	–6	–6V (Pass through)
	3	5P	PLL power 5V (Pass through)
	4	9P	PLL power 9V (Pass through)
	5	PSW	Power control signal
	6	14V	13.8V
	7	14V	13.8V
	8	14D	Digital 13.8V
	9	14D	Digital 13.8V
	10	THP	Thermal protection
	11	VSR	Reflected wave analog voltage
	12	VSF	Forward wave analog voltage
	13	ENF1	Enable for IC1 on FILTER board
	14	UDA2	Serial data for IC1 on FILTER board
	15	UCK2	Serial clock for IC1 on FILTER board
	16	TS	AT-300 control signal
	17	TT	AT-300 control signal
	18	6K	6kHz filter select signal
	19	3K	3kHz filter select signal
	20	15K	15kHz filter select signal
CN3	1	5D	Digital 5V
	2	MENA	Main encoder pulse A
	3	MENB	Main encoder pulse B
	4	DGND	Digital GND
CN4	1	NC	
	2	NC	
	3	SPED	Internal AT speed control signal
	4	APRE	Internal AT control select signal
	5	VRE	Reference voltage for A/D convertor
	6	PR22	Motor 2 control signal
	7	PR21	Motor 2 control signal
	8	POD2	Motor 2 position voltage
	9	PR12	Motor 1 control signal
	10	PR11	Motor 1 control signal
	11	POD1	Motor 1 position voltage
	12	GND	GND
CN5	1	GND	GND
	2	CTS	Communication inhibit signal from TS-870S
	3	RTS	Communication inhibit signal from personal computer
	4	RXD	TX data from TS-870S
	5	TXD	RX data from personal computer

TERMINAL FUNCTION

CN No.	Pin No.	Name	Function
	6	KEYS	Key jack sensing signal
	7	DASH	Electronic keyer dash signal
	8	DOT	Electronic keyer dot signal
	9	GND	GND
	10	H0	DSP control data bus
	11	H1	DSP control data bus
	12	H2	DSP control data bus
	13	H3	DSP control data bus
	14	H4	DSP control data bus
	15	H5	DSP control data bus
	16	H6	DSP control data bus
	17	H7	DSP control data bus
	18	HENA	DSP A enable signal
	19	HENB	DSP B enable signal
	20	HRW	DSP read/write control signal
CN6	1	GND	GND
	2	HA0	DSP control address bus
	3	HA1	DSP control address bus
	4	HA2	DSP control address bus
	5	GND	GND
	6	BEEP	Beep control signal
	7	MD	Microphone down signal
	8	MU	Microphone up signal
	9	SS	Standby switch
	10	GND	GND
	11	KEY	Key down signal
	12	DRST	DSP reset signal
	13	CKY	TX wave control signal
	14	RXC	RX control signal
	15	TXC	TX control signal
	16	AMUT	AF mute signal
	17	VCEN	TX-RX unit IC26 enable
	18	UCK2	TX-RX unit serial clock
	19	UDA2	TX-RX unit serial data
	20	DREN	DRU-3 control enable signal
	21	PLUL	TX-RX unit PLL unlock signal
	22	PLEN	TX-RX unit PLL control enable signal
	23	EOM	DRU-3 end of message
	24	VBSY	VS-2 busy signal
	25	STR	VS-2 synthesize control signal
	26	GND	GND
CN7	1	5D	Digital 5V
	2	VAGC	AGC VR analog voltage
	3	VKEY	KEY VR analog voltage
	4	VPRC	PROC VR analog voltage
	5	VMON	MONI VR analog voltage
	6	DGND	Digital GND
	7	NC	
	8	5D	Digital 5V
	9	VCAR	CAR VR analog voltage
	10	VDLY	DELAY VR analog voltage
	11	VMIC	MIC VR analog voltage
	12	VPWR	PWR VR analog voltage
	13	DGND	Digital GND
CN8	1	5D	Digital 5V
	2	14D	Digital 13.8V
	3	14D	Digital 13.8V
	4	ENL2	LCD driver control enable signal
	5	ENL3	LCD driver control enable signal
	6	UDA1	LCD driver control serial data
	7	UCK1	LCD driver control serial clock
	8	BLANK	LCD goes off control signal
	9	DIM	LCD dimmer control signal
	10	GND	GND

CN No.	Pin No.	Name	Function
CN9	1	BLNK	LED goes off control signal
	2	K0	Key input 0
	3	K1	Key input 1
	4	K2	Key input 2
	5	K3	Key input 3
	6	K4	Key input 4
	7	K5	Key input 5
	8	K6	key input 6
	9	K7	Key input 7
	10	PSW	Power switch input signal
	11	ENL4	Enable for IC501 on SW board
	12	ENL1	Enable for IC502~504 on SW board
	13	UDA1	Serial data for SW board
	14	UCK1	Serial clock for SW board
	15	LATC	AT tune LED control signal
	16	TXC	TX control signal (TX LED control)
	17	RES	IC501~504 reset signal
	18	5V	5V
	19	5D	Digital 5V
	20	DGND	Digital GND
CN10	1	NC	
	2	WENB	Width encoder pulse B
	3	WEBA	Width encoder pulse A
	4	SENB	Shift encoder pulse B
	5	SENA	Shift encoder pulse A
	6	GND	GND
	7	NC	
	8	5D	Digital 5V
	9	RENB	RIT encoder pulse B
	10	RENA	RIT encoder pulse A
	11	VAF	AF VR analog voltage
	12	VRF	RF VR analog voltage
	13	GND	GND
	14	NC	
	15	5D	Digital 5V
	16	CENB	Click encoder pulse B
	17	CENA	Click encoder pulse A
	18	VNB	NB VR analog voltage
	19	VSQL	SQL VR analog voltage
	20	GND	GND
CN11	1	NC	
	2	SS	Standby switch
	3	NC	
	4	GND	GND
	5	–6	–6V
	6	RBK	RF mute signal
	7	NC	
	8	ENR3	Enable for IC7 on RF board
	9	ENR2	Enable for IC2 on RF board
	10	ENR1	Enable for IC1 on RF board
	11	UDA2	Serial data for RF board
	12	UCK2	Serial clock for RF board
	13	NC	
	14	THP	Thermal protection
	15	ALM	ALC meter analog voltage
	16	VSR	Reflected wave analog voltage
	17	VSF	Forward wave analog voltage
	18	6K	6kHz filter select signal
	19	3K	3kHz filter select signal
	20	15K	15kHz filter select signal

CONTROL UNIT (X53-356X-XX) (B/4) : SW

CN501	1	DGND	Digital GND
	2	5D	Digital 5V

TERMINAL FUNCTION

CN No.	Pin No.	Name	Function
	3	5V	5V
	4	RES	IC501~504 reset signal
	5	TXC	TX control signal (TX LED control)
	6	LATC	AT tune LED control signal
	7	UCK1	Serial clock
	8	UDA1	Serial data
	9	ENL1	IC502~504 enable
	10	ENL4	IC501 enalbe
	11	PSW	Power switch output signal
	12	K7	Key output 7
	13	K6	Key output 6
	14	K5	Key output 5
	15	K4	Key output 4
	16	K3	Key output 3
	17	K2	Key output 2
	18	K1	Key output 1
	19	K0	Key output 0
	20	BLNK	LED goes off control signal
CONTROL UNIT (X53-356X-XX) (D/4) : MIC			
CN902	1	SS	Standby switch
	2	MD	Microphone down signal
	3	MU	Microphone up signal
	4	8M	8V for microphone
	5	MCG	GND
	6	MSG	MIC GND
	7	MIC	Microphone signal output
TX-RX UNIT (X57-4620-00)			
CN1	1	TIF	TX IF output (455kHz)
	2	GND	TIF GND
	3	RIF	RX IF input (455kHz)
	4	GND	RIF GND
CN3	1	LO4	Local 4 input (466kHz)
	2	GND	LO4 GND
	3	FMD	FM modulation output (To PLL)
	4	GND	FMD GND
CN4	1	MIC	Microphone signal input
	2	MSG	MIC GND
	3	MCG	GND
	4	SS	Microphone standby switch
	5	MU	Microphone up
	6	MD	Microphone down
	7	8M	8V for microphone
CN5	1	GND	GND
	2	DRMG	MIC GND
	3	DRM	Microphone signal output
	4	DRO	DRU-3 playback signal input
	5	5D	Digital 5V for DRU-3
	6	GND	GND
	7	EOM	End of message (End : "H")
	8	OVF	Over flow signal (Over flow : "L")
	9	DREN	DRU-3 enable
	10	SD	DRU-3 serial data
	11	SCK	DRU-3 clock
CN6	1	VO	Audio signal
	2	GND	GND
	3	SD	VS-2 control data
	4	SCK	VS-2 control data clock
	5	BSY	VS-2 busy
	6	STR	VS-2 synthesize control
	7	5C	5V for VS-2
	8	GND	GND
CN7	1	GND	GND

CN No.	Pin No.	Name	Function
	2	HA0	DSP data address
	3	HA1	DSP data address
	4	HA2	DSP data address
	5	GND	GND
	6	BEEP	Beep control signal
	7	MD	Microphone down signal
	8	MU	Microphone up signal
	9	SS	Standby switch
	10	GND	GND
	11	KEY	Key down signal
	12	DRST	DSP reset signal
	13	CKY	TX wave control signal
	14	RXC	RX control signal
	15	TXC	TX control signal
	16	AMUT	AF mute signal
	17	VCEN	IC26 enable
	18	UCK2	Serial clock for TX-RX unit
	19	UDA2	Serial data for TX-RX unit
	20	DREN	DRU-3 enable
	21	PLUL	TX-RX unit PLL unlock signal output
	22	PLEN	TX-RX unit PLL enable
	23	EOM	DRU-3 end of message signal output
	24	VBSY	VS-2 busy signal
	25	STR	VS-2 synthesize control signal
	26	GND	GND
CN8	1	GND	GND
	2	CTS	TX inhibit signal from TS-870S
	3	RTS	TX inhibit signal from personal computer
	4	RXD	TX data from TS-870S
	5	TXD	RX data from personal computer
	6	KEYS	Key jack sensing signal
	7	DASH	Electronic keyer dash signal
	8	DOT	Electronic keyer dot signal
	9	GND	GND
	10	H0	DSP data bus
	11	H1	DSP data bus
	12	H2	DSP data bus
	13	H3	DSP data bus
	14	H4	DSP data bus
	15	H5	DSP data bus
	16	H6	DSP data bus
	17	H7	DSP data bus
	18	HENA	DSP A enable signal
	19	HENB	DSP B enable signal
	20	HRW	DSP read/write control signal
CN9	1	14A	Analog 13.8V
	2	8D	Digital 8V
	3	14S	13.8V
	4	8A	Analog 8V
	5	APG	GND
CN10	1	SPI1	AF input when headphone through
	2	SPG	GND
	3	SPO1	Headphone AF output
CN11	1	GND	GND
	2	14S	13.8V
	3	8A	Analog 8V
	4	RXC	RX : "L"
	5	TXC	TX : "H"
	6	AGC	AGC voltage
	7	CKY	Keying signal
	8	SPO1	Speaker signal output
CN12	1	SPO3	Internal speaker AF output
	2	SPG	GND

TERMINAL FUNCTION

CN No.	Pin No.	Name	Function
CN13	Coaxial	REF	20MHz reference signal for PLL, DPS (From PLL)
J1	1	GND	GND
EXT.SP	2	NC	
	3	NC	
	4		External speaker signal output
	5		Signal input when external speaker not connected
J2	1	GND	GND
Paddle	2	NC	
	3	NC	
	4	NC	
	5	DASH	Electronic keyer dash signal
	6	DOT	Electronic keyer dot signal
	7	NC	
	8	NC	
	9	NC	
	10	KEYS	Key switch signal
	11	KEYS	Open when using paddle
J4	1		GND
RTTY	2		RTTY signal
	3		GND
	4		RTTY signal
J5	1	NC	
ACC2	2	NC	
	3	ANO	RX audio output
	4	GND	ANO GND
	5	PSQ	Squelch open : GND, Squelch close : open
	6	SMET	S-meter voltage output
	7	NC	
	8	GND	GND
	9	PKS	Standby switch when using PKD input (Front panel microphone input is muted)
	10	NC	
	11	PKD	TX input
	12	GND	PKD GND
	13	SS	Standby switch

CN No.	Pin No.	Name	Function
J6	1	GND	GND
KEY	2	GND	GND
	3	KEYS	Key jack sensing signal
	4	NC	
	5	KEY	Key down signal
J7	1	GND	GND
COM	2	NC	
	3	TXD	RX data from personal computer
	4	RXD	TX data from TS-870S
	5	NC	
	6	NC	
	7	CTS	TX inhibit signal from TS-870S
	8	RTS	TX inhibit signal from personal computer
	9	NC	

LCD ASSY (B38-0736-05)

CN1	1	GND	GND
	2	DIM	LCD dimmer control signal
	3	BLANK	LCD goes off control signal
	4	UCK1	LCD driver control serial clock
	5	UDA1	LCD driver control serial data
	6	ENL3	LCD driver control enable signal
	7	ENL2	LCD driver control enable signal
	8	14D	Digital 13.8V
	9	14D	Digital 13.8V
	10	5D	Digital 5V

TS-870S PC BOARD VIEWS

LCD ASSY (B38-0736-05)
Component side view

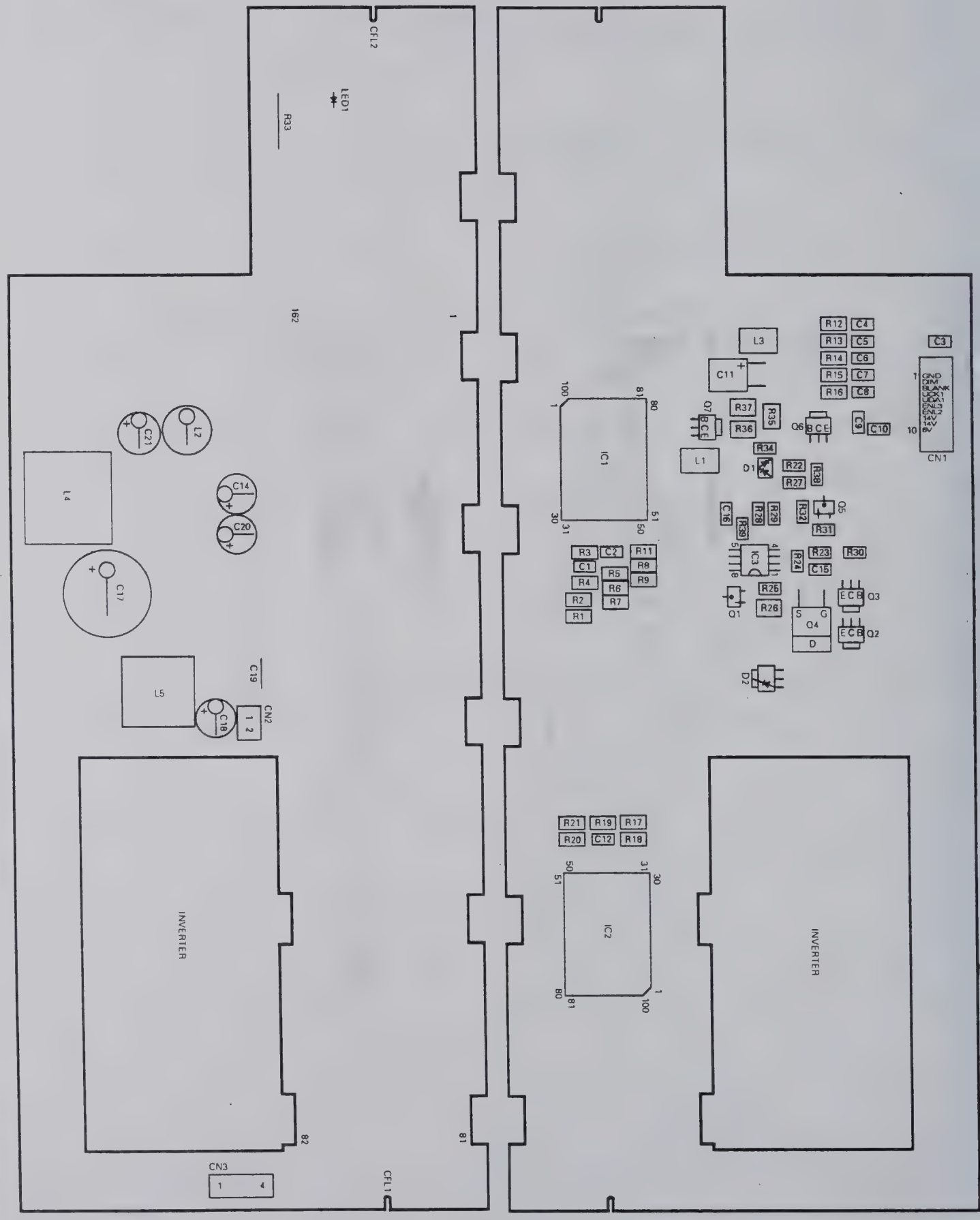

LCD ASSY (B38-0736-05)
Foil side view

RF UNIT (X44-3210-00) (C/9)
Component side view

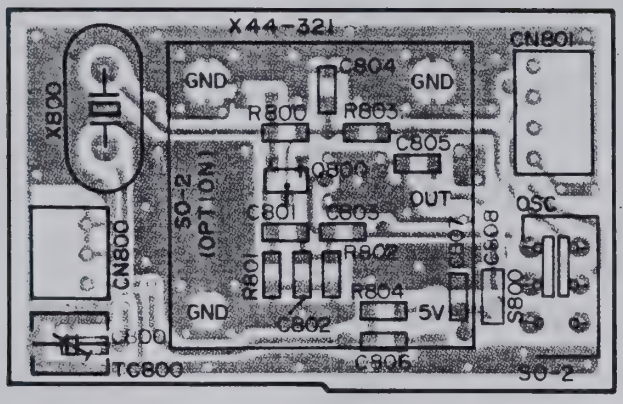

RF UNIT (X44-3210-00) (C/9)
Foil side view

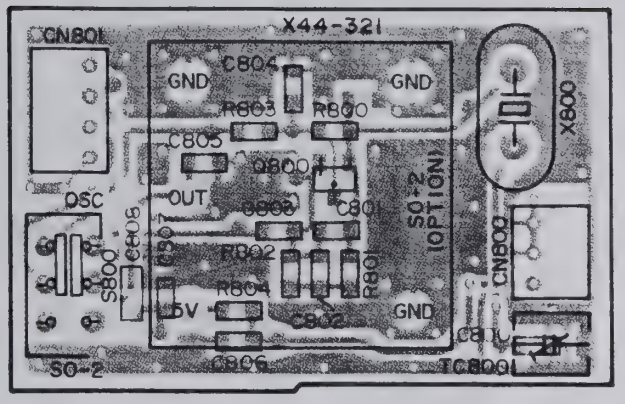

Component side
Foil side

VCO2 (X58-3390-03)
Component side view

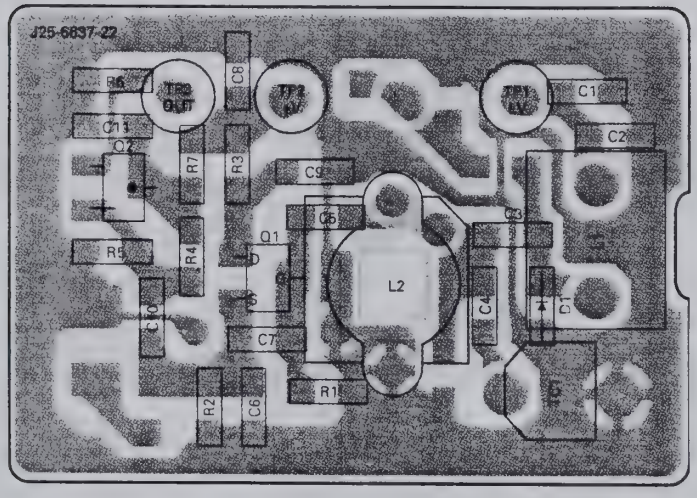

VCO2 (X58-3390-03)
Foil side view

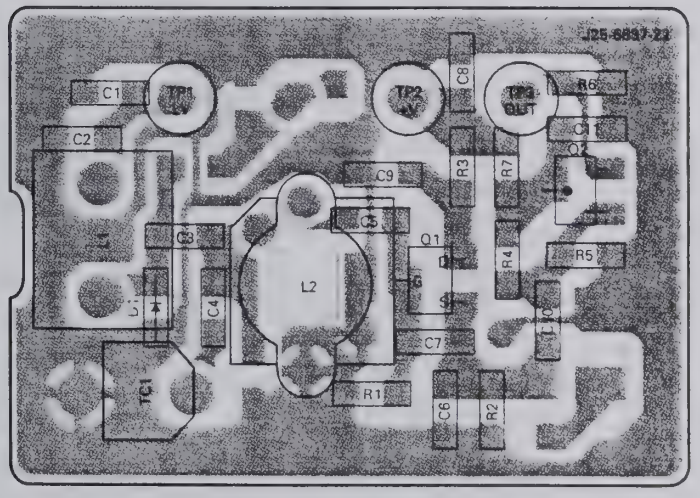

FINAL UNIT (X45-351X-XX) (A/5) : FINAL

Component side view

0-00 : K,P,M,M2,X
2-71 : E,E2,E3,E9

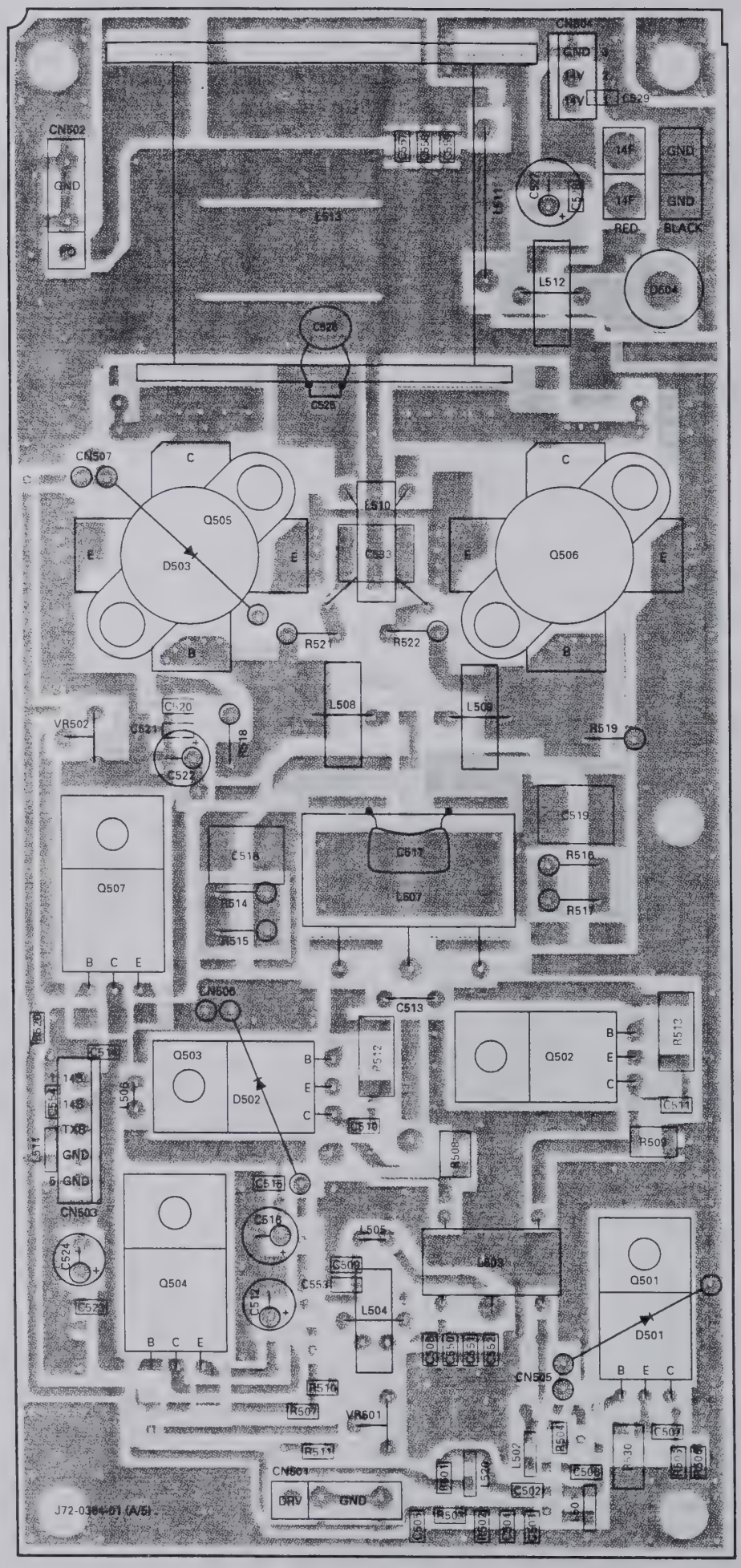

Component side
Foil side

FINAL UNIT (X45-351X-XX) (A/5) : FINAL
Foil side view
0-00 : K,P,M,M2,X
2-71 : E,E2,E3,E9

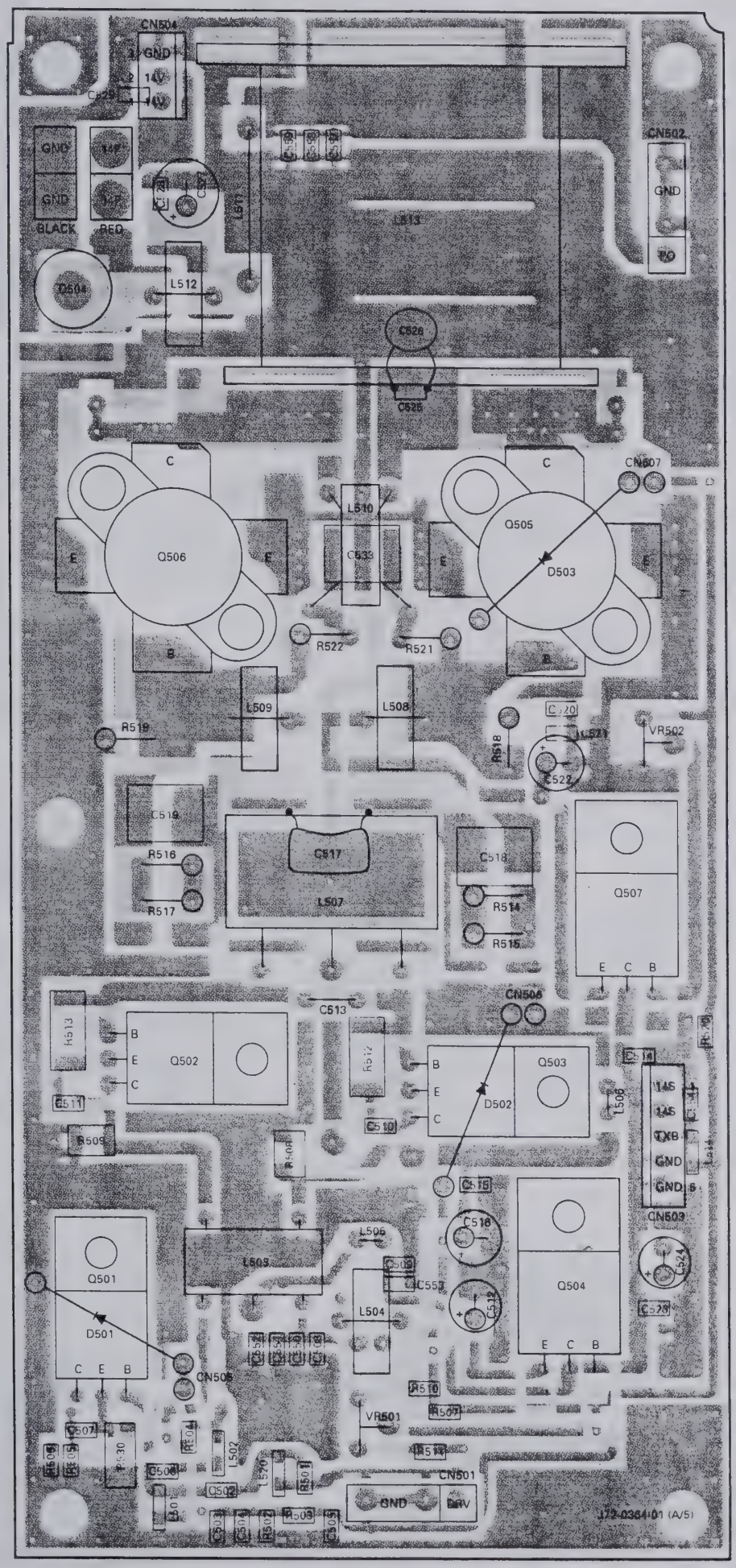

Component side
Foil side

TS-870S PC BOARD VIEW

FINAL UNIT (X45-351X-XX) (B/5) : FILTER

Component side view 0-00 : K,P,M,M2,X 2-71 : E,E2,E3,E9

Component side
Foil side

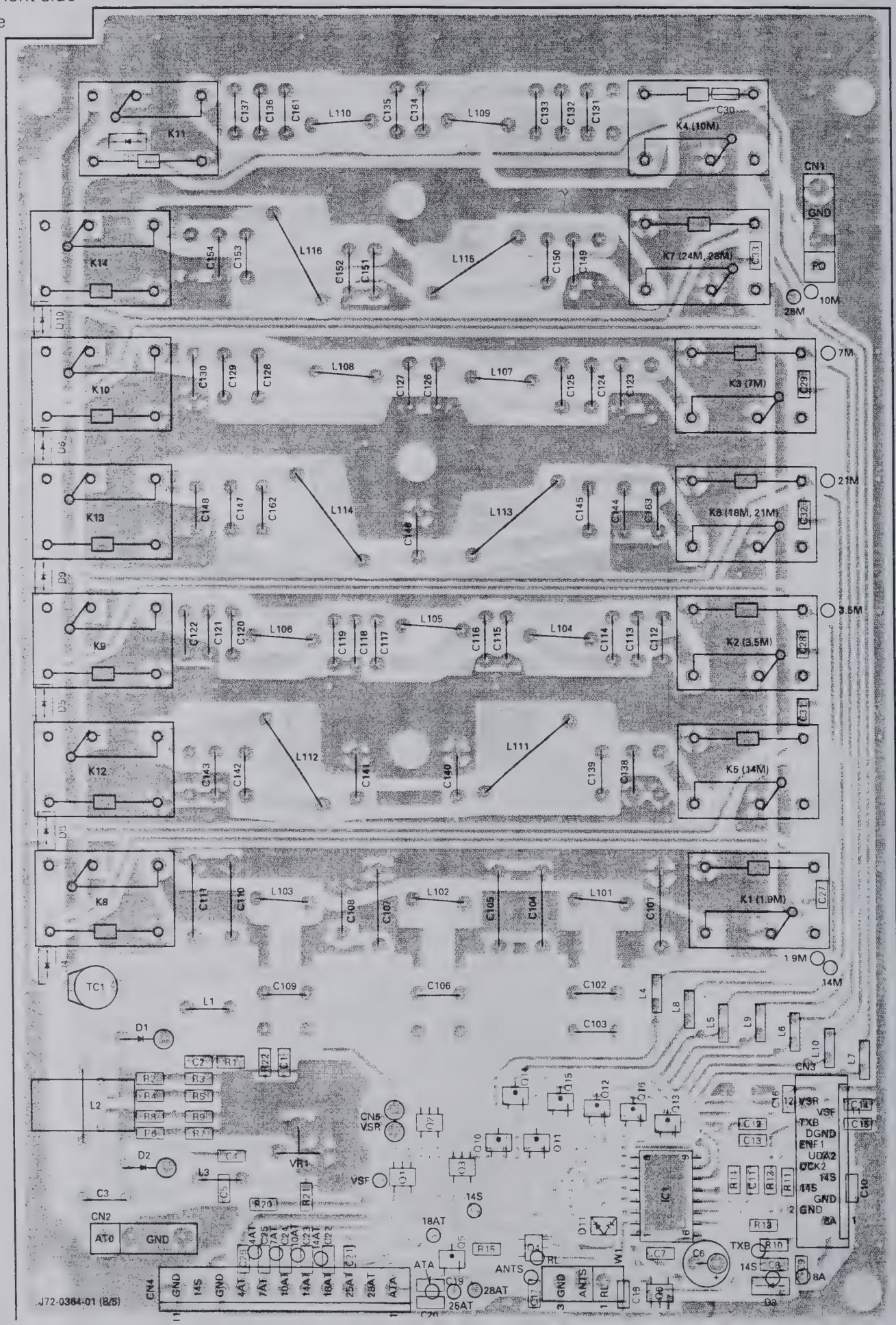

PC BOARD VIEW

FINAL UNIT (X45-351X-XX) (B/5) : FILTER

Foil side view 0-00 : K,P,M,M2,X 2-71 : E,E2,E3,E9

Component side
Foil side

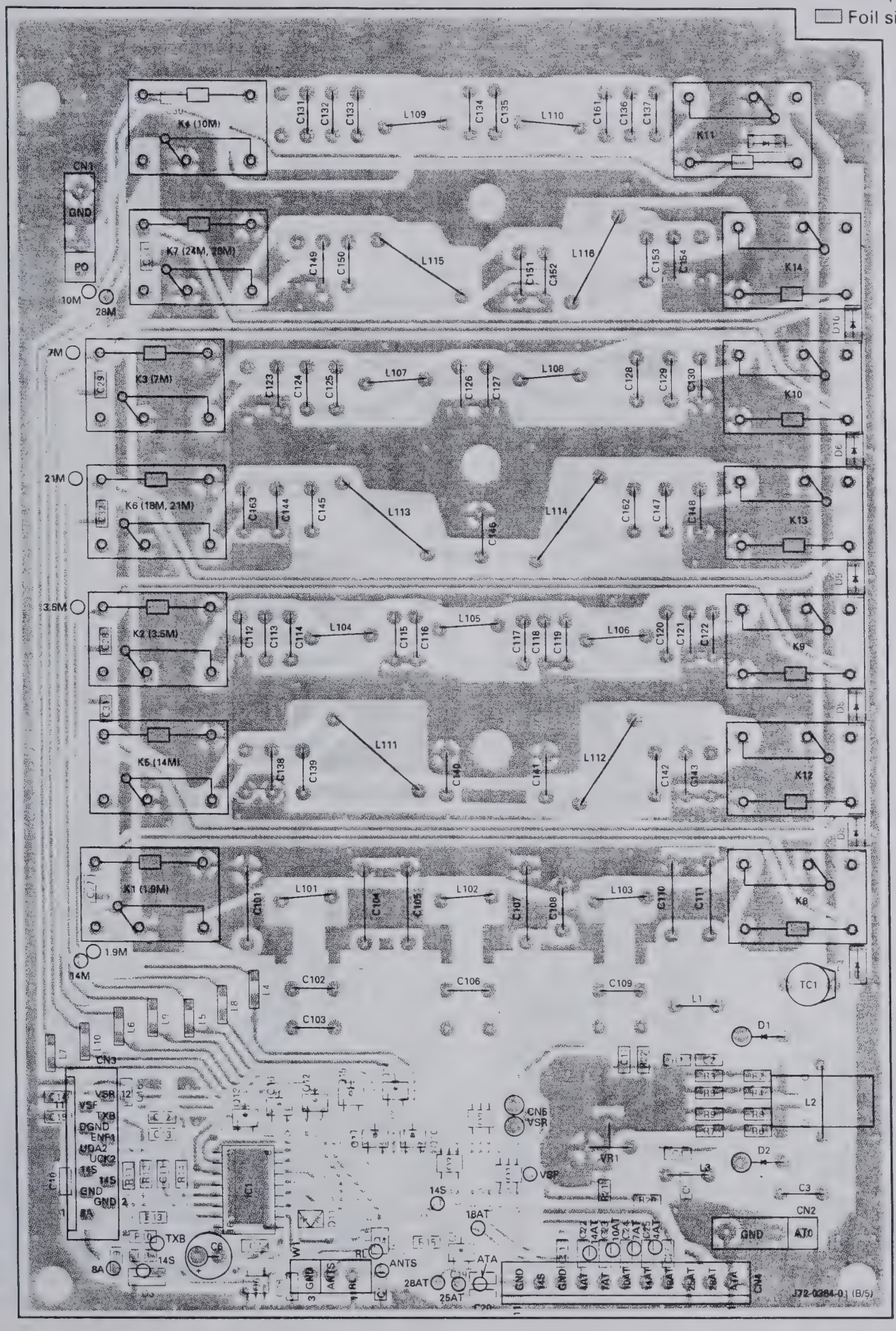

IS-870S PC BOARD VIEWS

FINAL UNIT
(X45-351X-XX) (D/5) : AVR
Component side view
0-00 : K,P,M,M2,X
2-71 : E,E2,E3,E9

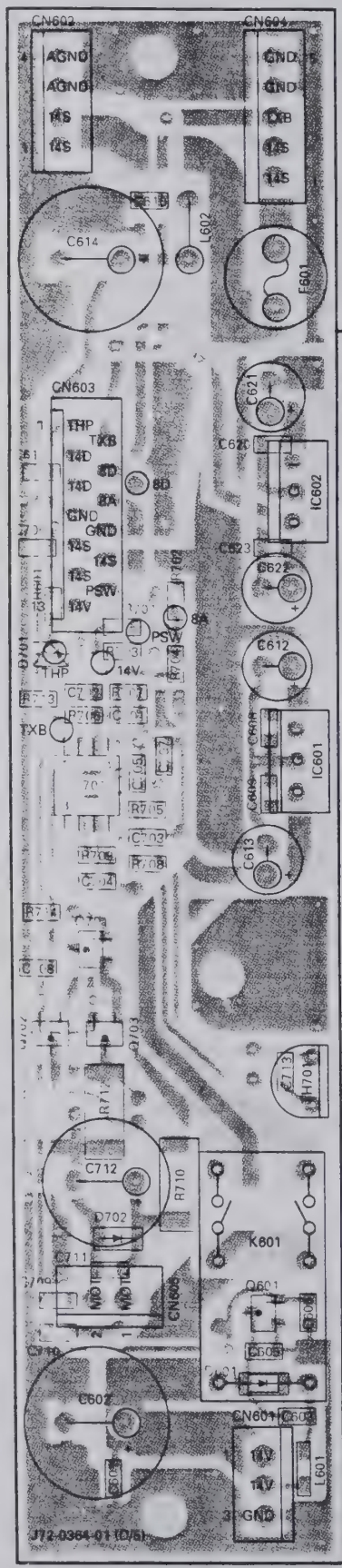

FINAL UNIT
(X45-351X-XX) (E/5)
: RELAY
Component side view
0-00 : K,P,M,M2,X
2-71 : E,E2,E3,E9

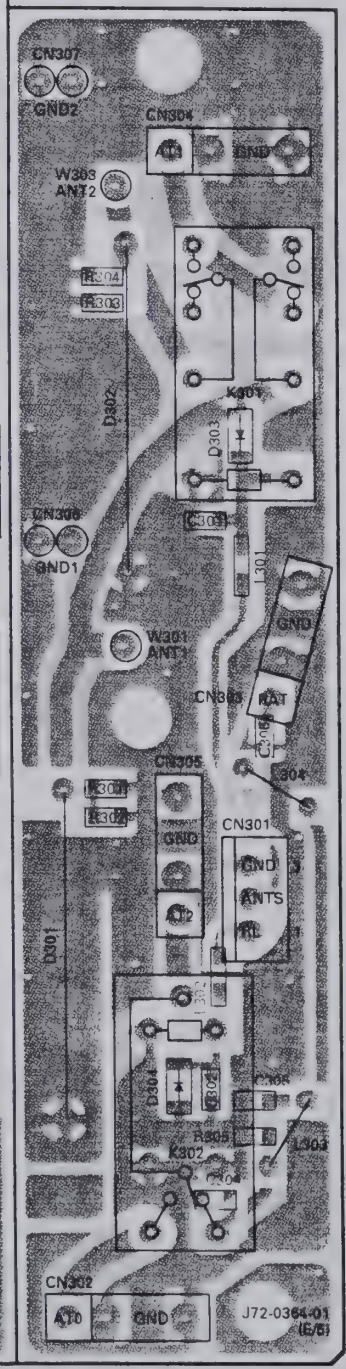

FINAL UNIT
(X45-351X-XX) (E/5)
: RELAY
Foil side view
0-00 : K,P,M,M2,X
2-71 : E,E2,E3,E9

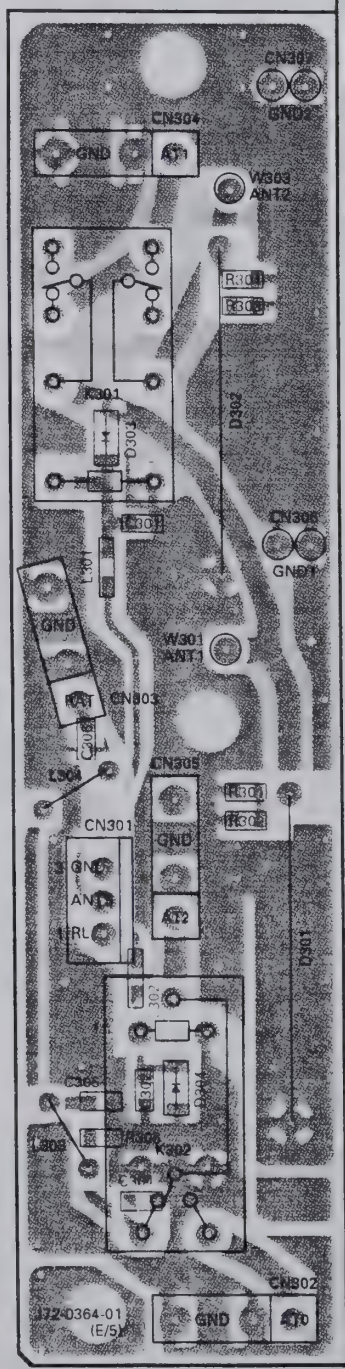

FINAL UNIT
(X45-351X-XX) (D/5) : AVR
Foil side view
0-00 : K,P,M,M2,X
2-71 : E,E2,E3,E9

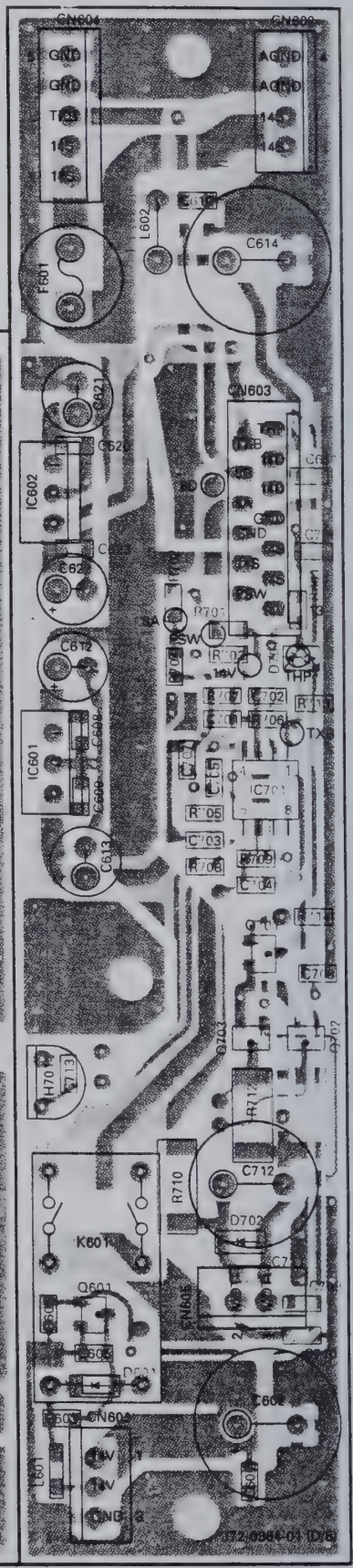

Component side
Foil side

TS-870S PC BOARD VIEWS

CONTROL UNIT (X53-356X-XX) (D/4) : MIC
Component side view
0-11 : K,P 0-21 : M 0-22 : M2 0-71 : X
2-71 : E 2-72 : E2 2-73 : E3 2-74 : E9

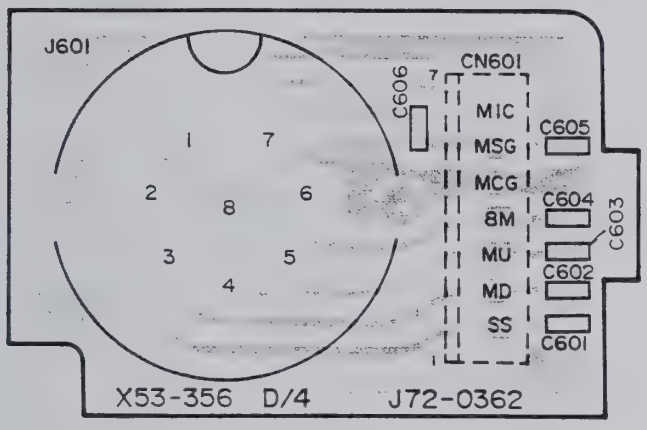

CONTROL UNIT (X53-356X-XX) (D/4) : MIC
Foil side view
0-11 : K,P 0-21 : M 0-22 : M2 0-71 : X
2-71 : E 2-72 : E2 2-73 : E3 2-74 : E9

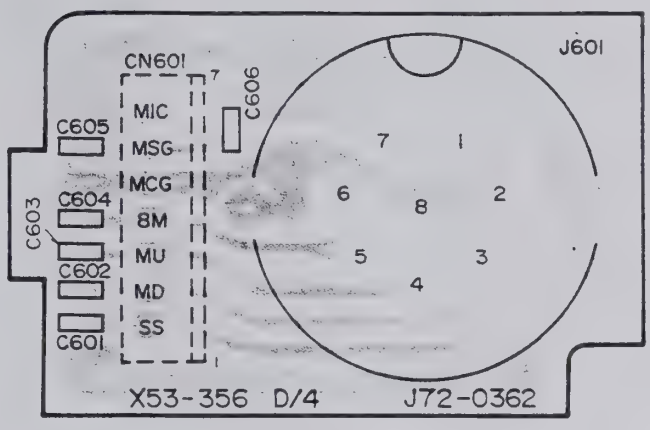

Component side
Foil side

PC BOARD VIEW TS-870S

FINAL UNIT (X45-351X-XX) (C/5)
: CONNECTION Foil side view

0-00 : K,P,M,M2,X
2-71 : E,E2,E3,E9

2SA1162
2SC2712

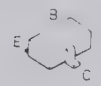

2SD1406

2SD1624

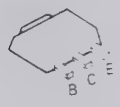

3SK131

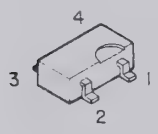

UPC7805H

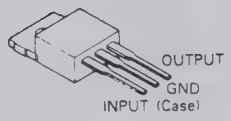

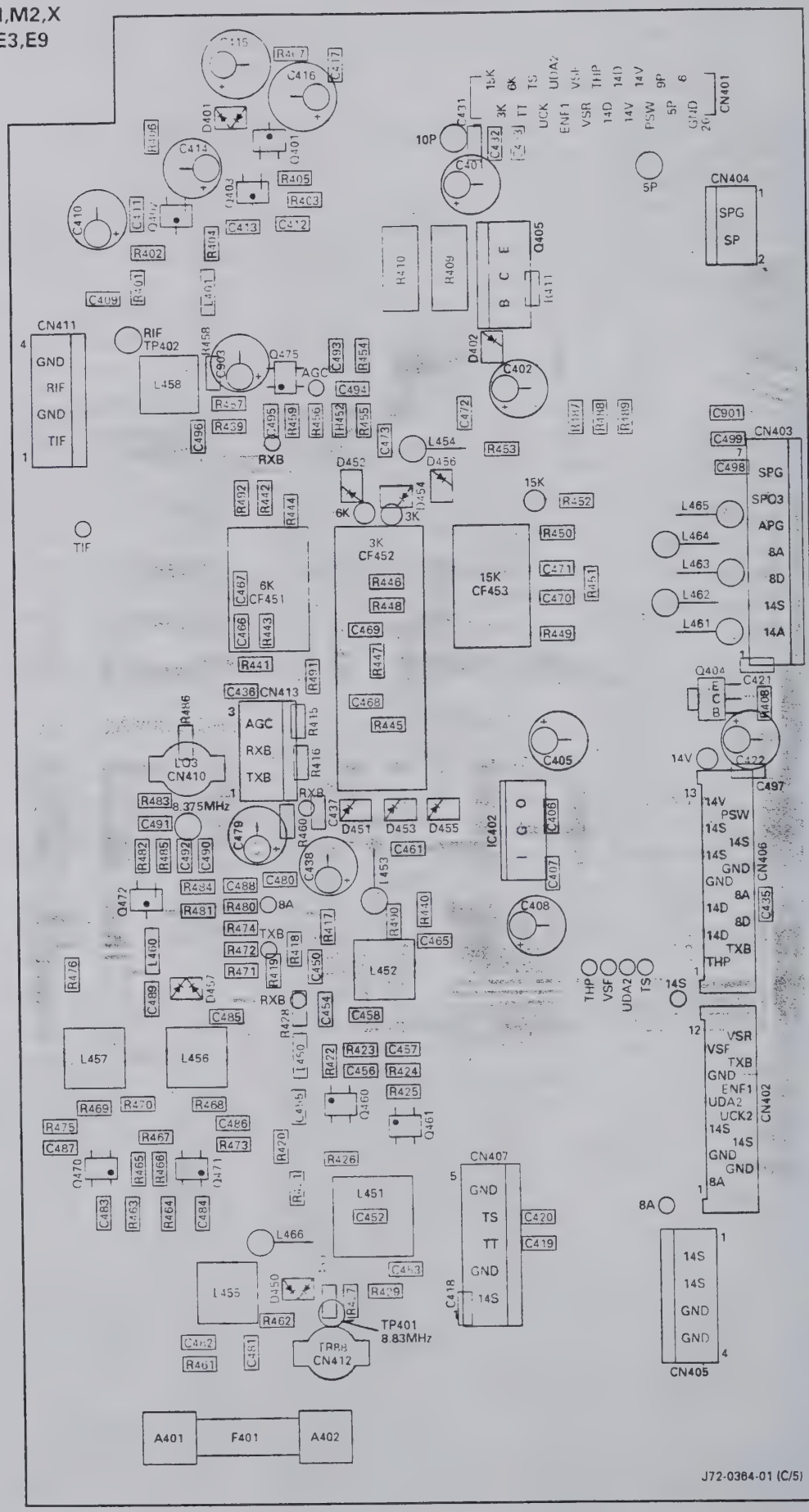

Component side
Foil side

DRU-3 (DIGITAL RECORDING UNIT)

DRU-3 Circuit Diagram

X43-3090-20

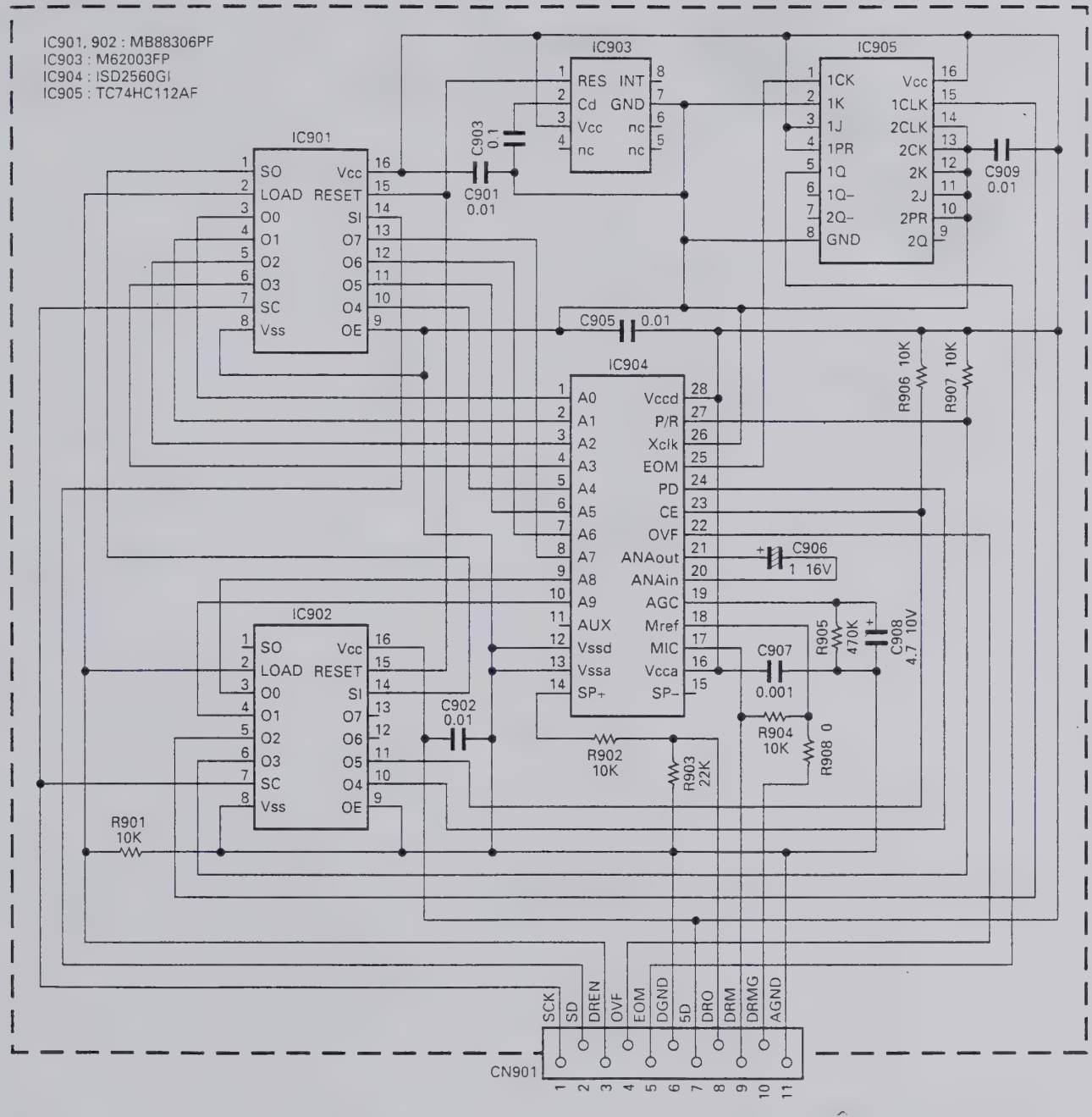

PG-2Z (DC CABLE)

PG-2Z External View

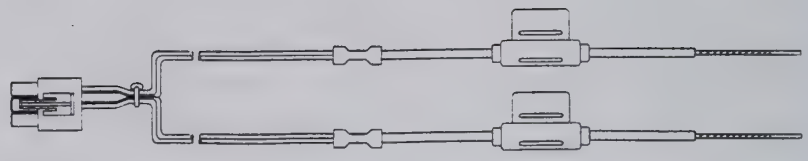

PG-2Z Parts List

Parts No.	New parts	Description
E30-3157-15		DC cable assy
F05-2531-05		Fuse (25A/32V)

SPECIFICATIONS

	Item			Rating
GENERAL	Mode			J3E (LSB, USB), A1A (CW), A3E (AM), F3E (FM), F1D (FSK)
	Number of memory channels			100
	Antenna impedance			50Ω (With Antenna Tuner 20 to 150Ω)
	Supply voltage			DC 13.8V ± 15%
	Grounding method			Negative ground
	Current	Transmit (Max.)		20.5A
		Receive (No signal)		2A
	Usable temperature range			–10°C to +50°C (+14°F to +122°F)
	Frequency stability (–10°C to +50°C)			Within ±10PPM
	Frequency accuracy (At room temperature)			Within ±10PPM
	Dimensions [W x H x D] (Projections included)			330 x 120 x 334 mm/13.0 x 4.72 x 13.1 in (339 x 135 x 375 mm/13.3 x 5.31 x 14.8 in)
	Weight			Approx. 11.5kg (25lbs)
TRANSMITTER	Frequency range	160m band		1.8*1 to 2.0*2MHz
		80m band		3.5 to 4.0*3MHz
		40m band		7.0 to 7.3*4MHz
		30m band		10.1 to 10.15MHz
		20m band		14.0 to 14.35MHz
		17m band		18.068 to 18.168MHz
		15m band		21.0 to 21.45MHz
		12m band		24.89 to 24.99MHz
		10m band		28.0 to 29.7MHz
	Output power*5	SSB, CW, FSK, FM	Max.	100W
			Min.	20W or less
		AM	Max.	25W
			Min.	20W or less
	Modulation	SSB		Balanced
		FM		Reactance
		AM		Low level
	Spurious emissions			–60dB or less
	Carrier suppression			50dB or more
	Unwanted sideband suppression (Modulation frequency 1.0kHz)			50dB or more
	Maximum frequency deviation (FM)	Wide		±5kHz or less
		Narrow		±2.5kHz or less
	Transmit frequency characteristics (–6dB) (TX lower cutoff : 300Hz, TX bandwidth : 2.3kHz)			300 to 2600Hz
	XIT shift frequency range			±9.99kHz
	Microphone imppedance			600Ω

*1 1.81MHz : Europe, France, Holland; 1.83MHz : Belgium, Spain
*2 1.85MHz : Belgium, France, Holland, Spain
*3 3.8MHz : Europe, Belgium, France, Holland, Spain
*4 7.1MHz : Europe, Belgium, France, Holland, Spain
*5 Belgium, Spain : 10W fixed on 160m band

TS-870S

SPECIFICATIONS

	Item			Rating
RECEIVER	Circuit type			Quadruple conversion superheterodyne
	Frequency range			100kHz to 30MHz
	Intermediate frequency			1st : 73.05MHz, 2nd : 8.83MHz, 3rd : 455kHz, 4th 11.3kHz
	Sensitivity	SSB, CW, FSK (At 10dB (S+N)/N)	100kHz to 500kHz	1μV or less
			500kHz to 1.62MHz*6	4μV or less
			1.62MHz*6 to 24.5MHz	0.2μV or less
			24.5MHz to 30MHz	0.13μV or less
		AM (At 10dB (S+N)/N)	100kHz to 500kHz	2μV or less
			500kHz to 1.62MHz*6	31.6μV or less
			1.62MHz*6 to 24.5MHz	2μV or less
			24.5MHz to 30MHz	2μV or less
		FM (At 12dB SINAD)	28MHz to 30MHz	0.25μV or less
	Selectivity	SSB Lo : 300Hz, Hi : 2600Hz		–6dB : 2.3kHz, –60dB : 3.3kHz
		CW Width : 200Hz		–6dB : 200Hz, –60dB : 450Hz
		FSK Width : 500Hz		–6dB : 500Hz, –60dB : 1000Hz
		AM Lo : 100Hz, Hi : 4000Hz		–6dB : 9kHz, –60dB : 12kHz
		FM Width : 14kHz		–6dB : 14kHz, –60dB : 18kHz
	Image rejection (1.8MHz to 30MHz)			80dB or more
	1st IF rejection (1.8MHz to 30MHz)			80dB or more
	Notch filter atteneuation			40dB or more
	RIT shift frequency range			±9.99kHz
	Squelch sensitivity	SSB, CW, FSK, AM	100kHz to 500kHz	2μV or less
			500kHz to 1.62MHz*6	20μV or less
			1.62MHz*6 to 30MHz	2μV or less
		FM	28MHz to 30MHz	0.25μV or less
	Audio output (8Ω, 10% distortion)			1.5W or more
	Audio output impedance			8Ω

*6 1.705MHz : Canada, U.S.A.

Specifications are subject to change without notice or obligation due to ongoing technological developments.

KENWOOD CORPORATION
14-6, Dogenzaka 1-chome, Shibuya-ku, Tokyo 150, Japan

KENWOOD SERVICE CORPORATION
P.O. BOX 22745, 2201 East Dominguez Street, Long Beach, CA 90801-5745, U.S.A

KENWOOD ELECTRONICS LATIN AMERICA S.A.
P.O. BOX 55-2791 Piso 6 Plaza Chase Cl. 47 y Aquilino de la Guardio Panama, Republic of Panama

KENWOOD ELECTRONICS CANADA INC.
6070 Kestrel Road, Mississauga, Ontario, Canada L5T 1S8

KENWOOD ELECTRONICS DEUTSCHLAND GMBH
Rembrücker Str. 15, 63150 Heusenstamm, Germany

KENWOOD ELECTRONICS BENELUX N.V.
Mechelsesteenweg 418 B-1930 Zaventem, Belgium

TRIO-KENWOOD FRANCE S.A.
13, Boulevard Ney, 75018 Paris, France

TRIO-KENWOOD U.K. LIMITED
KENWOOD House, Dwight Road, Watford, Herts., WD1 8EB United Kingdom

KENWOOD ELECTRONICS NEDERLAND B.V.
Amsterdamseweg 35, 1422 AC Uithoorn, The Netherlands

KENWOOD ELECTRONICS ITALIA S.p.A.
Via G. Sirtori, 7/9 20129 Milano, Italy

KENWOOD IBERICA S.A.
Bolivia, 239-08020 Barcelona, Spain

KENWOOD ELECTRONICS AUSTRALIA PTY. LTD.
(A.C.N. 001 499 074)
P.O. Box 504, 8 Figtree Drive, Australia Centre, Homebush, N.S.W. 2140, Australia

KENWOOD & LEE ELECTRONICS, LTD.
Unit 3712-3724, Level 37, Tower one Metroplaza, 223 Hing Fong Road, Kwai Fong, N.T., Hong Kong

HF TRANSCEIVER

TS-870S

SERVICE MANUAL

KENWOOD

© 1995-8 PRINTED IN JAPAN
B51-8296-00(N)1360

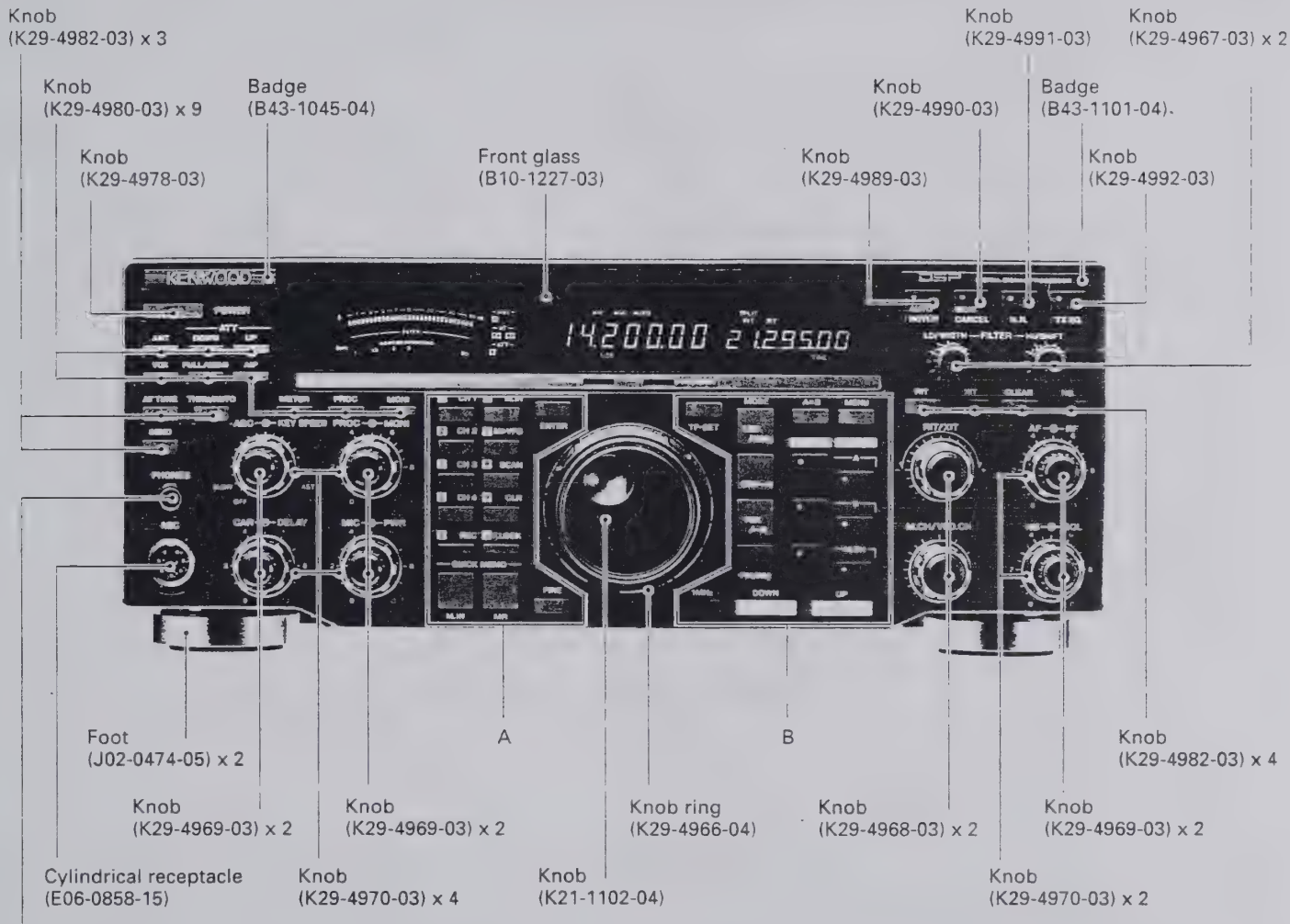

A

Knob (K29-4982-03)	Knob (K29-4982-03)	Knob (K29-4982-03)
Knob (K29-4982-03)	Knob (K29-4982-03)	
Knob (K29-4982-03)	Knob (K29-4982-03)	
Knob (K29-4982-03)	Knob (K29-4982-03)	
Knob (K29-4980-03)	Knob (K29-4980-03)	
Knob (K29-4984-03)	Knob (K29-4984-03)	Knob (K29-4982-03)

B

Knob (K29-4982-03)	Knob (K29-4985-03)	Knob (K29-4982-03)	Knob (K29-4982-03)
	Knob (K29-4986-03)	Knob (K29-4983-03)	Knob (K29-4981-03)
	Knob (29-4987-03)	Knob (K29-4983-03)	Knob (K29-4981-03)
	Knob (K29-4988-03)	Knob (K29-4983-03)	Knob (K29-4981-03)
Knob (K29-4982-03)	Knob (K29-4979-03)		Knob (K29-4979-03)

CONTENTS

CIRCUIT DESCRIPTION 3
DESCRIPTION OF COMPONENTS 45
SEMICONDUCTOR DATA 53
PARTS LIST 58
EXPLODED VIEW 81
PACKING 88
ADJUSTMENT 89
TERMINAL FUNCTION 104
CIRCUIT DIAGRAMS / PC BOARD VIEWS
- LCD ASSY (B38-0736-05) 110
- RF UNIT (X44-3210-00) (A/9) : RF 113
- RF UNIT (X44-3210-00) (B/9) : PLL 117
- RF UNIT (X44-3210-00) (C/9) 127
- VCO2 (X58-3390-03) 127
- FINAL UNIT (X45-351X-XX) (A/5) : FINAL 128
- FINAL UNIT (X45-351X-XX) (B/5) : FILTER 130
- FINAL UNIT (X45-351X-XX) (D/5) : AVR 132
- FINAL UNIT (X45-351X-XX) (E/5) : RELAY 132
- AT UNIT (X53-3340-02) (A/2) 137
- AT UNIT (X53-3340-02) (B/2) 139
- CONTROL UNIT (X53-356X-XX) (A/4) : CONTROL 143
- CONTROL UNIT (X53-356X-XX) (B/4) : SW 147
- TX-RX UNIT (X57-4620-00) 155
- RF UNIT (X44-3210-00) (D/9) 169
- RF UNIT (X44-3210-00) (E/9) 169
- RF UNIT (X44-3210-00) (F/9) 170
- RF UNIT (X44-3210-00) (G/9) 170
- RF UNIT (X44-3210-00) (H/9) 171
- RF UNIT (X44-3210-00) (I/9) 171
- FINAL UNIT (X45-351X-XX) (C/5) : CONNECTION 172
- CONTROL UNIT (X53-356X-XX) (D/4) : MIC 174

SCHEMATIC DIAGRAM 175
BLOCK DIAGRAM 179
LEVEL DIAGRAM 183
DRU-3 (DIGITAL RECORDING UNIT) 185
PG-2Z (DC CABLE) 188
SPECIFICATIONS 189

CIRCUIT DESCRIPTION

Frequency Configuration

The TS-870S is quadruple conversion in receive mode. As a transmitter, it is quadruple conversion in non-FM modes and double conversion in FM mode.

The fourth 11.3kHz IF signal is converted from analog to digital, connected to the DSP in receive mode, and decoded. In transmit mode, the microphone input signal is converted from analog to digital and applied to the DSP. It is converted from digital to analog, passed through a mixer, and becomes the 455kHz TIF signal. In FM mode, however, only 455kHz carriers are output from the DSP.

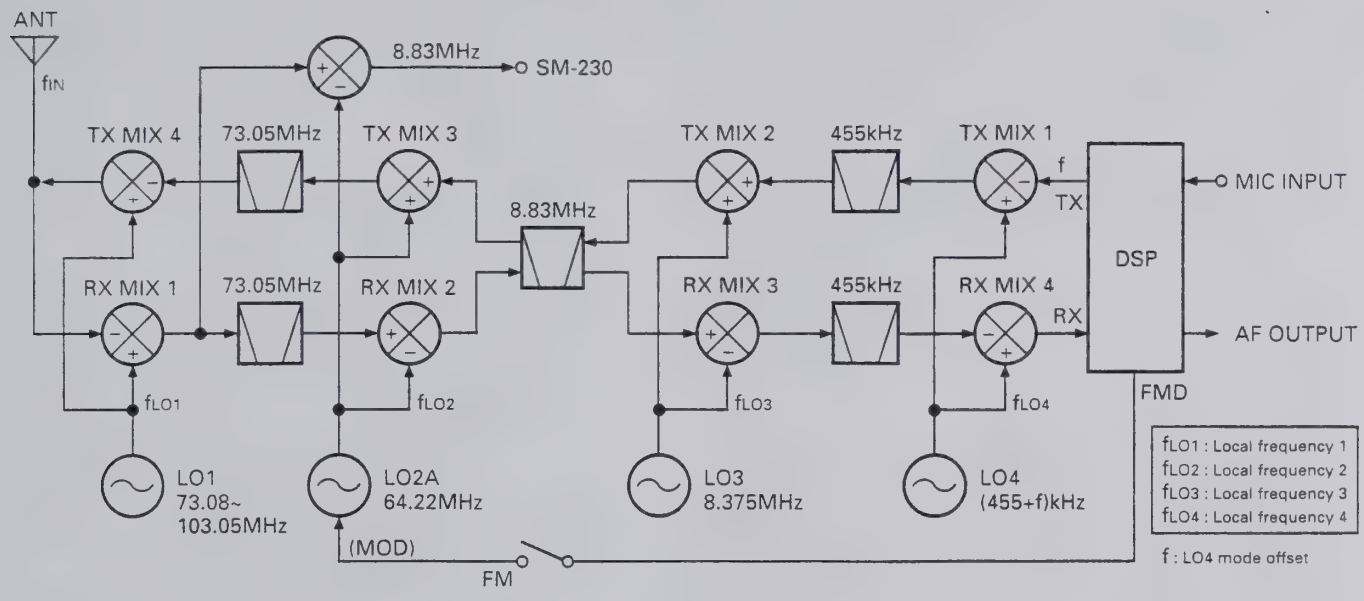

Fig. 1 Frequency configutation

■ Frequency configuration

When the receiver frequency by fIN from the antenna in SSB mode is zero beat (namely, at zero to the SSB signal with a carrier point of fIN), the relationship between these signals is expressed by the following equation.

$$f_{IN} = f_{LO1} - f_{LO2} - f_{LO3} - f_{LO4} + f \quad \ldots . (1)$$

Since all these frequencies are generated by the PLL or DDS circuits as shown in the PLL block diagram in Figure 2, the receiver frequency is determined only by the reference frequency fSTD, the PLL dividing ratio and DDS data. Therefore, the reference frequency accuracy equals the operating frequency accuracy.

The accuracy of the reference oscillator used in the TS-870S is 10ppm (–10 to +50°C). If the temperature-compensated crystal oscillator (TCXO) SO-2 is used, the accuracy becomes 0.5ppm (–10 to +50°C).

The TS-870S local oscillator and CAR DDS are independent of each other. However, they can be operated like a cancel loop configuration by changing the CAR and local oscillator PLL data simultaneously via a microprocessor. This function allows a shift (fLO1, fLO3, fLO4) by the mode change to be performed and the band width of the slope tune to be varied (fLO1, fLO3, fLO4).

When used as a transmitter in SSB mode or in other modes, likewise the frequency is determined by the reference frequency fSTD and dividing ratio. The display frequencies in the modes are listed in Table 1. In the FSK mode, the TS-870S displays the mark transmitter frequency.

In CW mode, the TS-870S receiving pitch can be changed to the required frequency in 50Hz steps with the desired signal remaining in the center of the IF filter band-pass (Variable CW pitch system). Since the receiving pitch varies along with the transmitter side tone, it is possible to zero-beat by receiving the desired signal at the same pitch as the side tone.

FM transmission is obtained in this system by modulating the f_{LO2} via application of the audio signal from the microphone to the VCO2.

Mode	Display frequency
USB, LSB	Carrier point frequency
CW	Transmission carrier frequency
FSK	Mark transmitter frequency
AM, FM	IF filter center frequency

Table 1 Display frequency in each mode

PLL Circuit

The TS-870S PLL circuit consists of a PLL loop that includes DDS covering a frequency range between 30kHz to 30MHz in 10Hz or 1Hz steps in accordance with the 20kHz reference frequency; DDS that generates other local oscillators (LO3, LO4); and a PLL loop that produces LO2A.

The dividing ratio data to each PLL loop and the DDS data are controlled by a microprocessor. Each loop is controlled by a single crystal frequency control system according to the reference frequency f_{STD}. (See the PLL block diagram in Figure 2.)

■ Reference signal generation circuit

The reference frequency f_{STD} used for frequency control is determined by the 20MHz crystal oscillator (X800 and Q800 : 2SC2714). One reference frequency is output as the reference signal f_{REF} for the PLL and DDS in the PLL section. The other is sent to the TX-RX unit and used as the PLL reference signal for the PLL and DSP.

The crystal oscillator may be replaced by an optional TCXO (SO-2), and the TCXO may be switched to with slide switch S800.

If the optional TCXO (SO-2) is installed, the S800 switch must be set to the SO-2 position.

■ LO2 (PLL section)

Q1 : 2SK508NV in VCO2 (A501 : X58-3390-03) generates 64.22MHz. The 20MHz reference frequency f_{REF} is applied to pin 15 of IC509 : MB86001PF, and is divided internally by a factor of 1000 (4000 in FM mode) to produce a 20kHz (5kHz in FM mode) comparison frequency.

The VCO2 output is applied to pin 6 of IC509 : MB86001PF, and is internally divided by a factor of 3211 (12844 in FM mode). It is compared with the 20kHz (5kHz in FM mode) signal using the phase comparator. The VCO2 frequency is locked. The division ratio is transmitted from the control unit.

The output from PLL2 is passed through buffer Q539, amplified by amplifier Q532, passed through a low-pass filter, its impedance is converted, and is then output to the RF section as LO2A.

■ LO1 (PLL loop)

Four VCOs and uses Q520 to Q523 : 2SK508NV x 4 to generate 73.08MHz to 103.05MHz. The 20MHz reference frequency f_{REF} is applied to pin 15 of PLL IC IC507 : MB86001PF, and is internally divided by a factor of 20 to produce a 1MHz comparison frequency. The output is passed through amplifier Q524, and a band-pass filter. One output is passed through buffer Q526 : 2SC2996 and a low-pass filter and goes to the RF section.

The other output signal is passed through buffer Q525 : 2SC2714 and applied to pin 5 of mixer IC508 : SN76514. A signal of 54.54 to 55.54MHz is input to pin 11 of IC508 and converted to a signal of 18.0 to 48.0MHz. This signal is output from pin 13. The signal is passed through a high-pass filter, a low-pass filter, and amplifier Q531 : 2SC2714 and Q530 : 2SC2712, and goes to pin 6 of PLL IC IC507 : MB86001PF.

This signal is internally divided by N, and compared with the 1MHz signal using the phase comparator. The mixer output frequency is locked in 1MHz steps. The division ratio N is transmitted from the control unit as data (N : 18 to 48) corresponding to 0MHz to 30MHz in 1MHz steps. One of the four VCOs is selected according to the VCO change signal (VB0 to VB3) sent from the control unit.

CIRCUIT DESCRIPTION

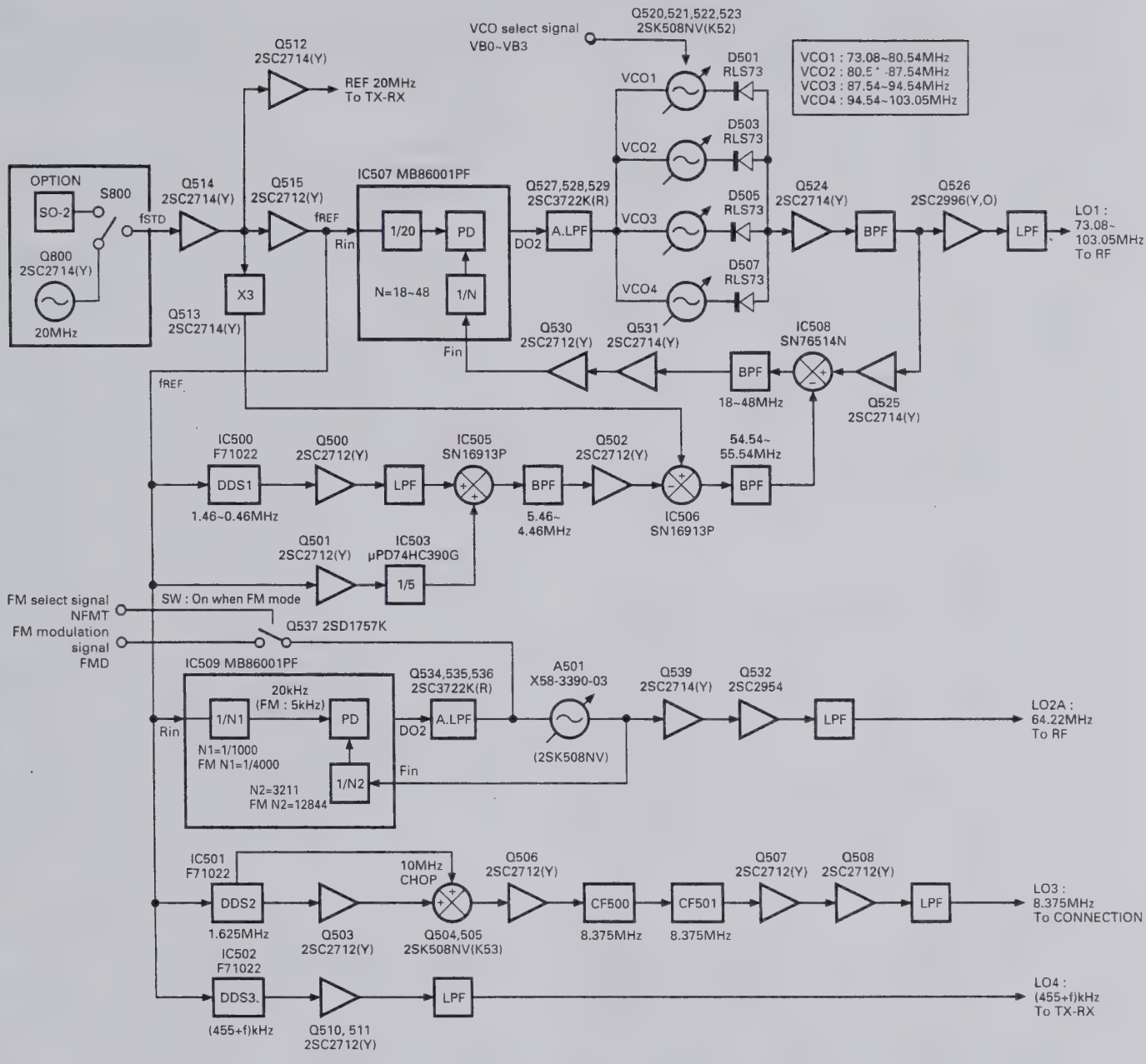

Fig. 2 PLL block diagram

CIRCUIT DESCRIPTION

DDS1 (IC500 : F71022) generates 1.46 to 0.46MHz digital signals. They are converted to analog signals by a digital to analog converter (consisting of CP500, CP501, and Q500), passed through a low-pass filter, and fed to pin 5 of mixer IC505 : SN16913P. The 4MHz signal produced by division of 20MHz reference frequency fREF by divider IC503 : UPD74HC390G by a factor of 5 is input to pin 2 of the mixer IC505, and a 5.46 to 4.46MHz signal is output from pin 1. The output signal is passed through a band-pass filter and buffer Q502, and input to pin 5 of mixer IC506 : SN16913P. The 60MHz signal obtained by tripling 20MHz reference frequency fREF via multiplying circuit Q515 is mixed, and a 54.54 to 55.54MHz signal is output. This signal is passed through a band-pass filter, and goes to pin 13 of mixer IC508.

DDS1 sweeps the 1.46 to 0.46MHz digital signal output in 10 or 1Hz steps, and LO1 covers the 73.08 to 103.05MHz signal in 10 or 1Hz steps and is output to the RF section.

■ LO3 generation

DDS2 (IC501 : F71022) generates a digital signal of the 1.625MHz basic frequency. It is converted to an analog signal by a digital-to-analog converter (consisting of CP502, CP503, and Q503), and chopped by a circuit consisting of Q503 to Q505 so as to extract an 8.375MHz primary harmonic component. Unwanted components are removed by a ceramic filter consisting of CF500 and CF501. The resulting signal is passed through amplifier Q507, buffer Q508, and a low-pass filter, and output to the connection section (final unit) as the LO3 signal.

■ LO4 generation

DDS3 (IC502 : F71022) generates a (455+f) kHz digital signal. It is converted to an analog signal by a digital to analog converter (consisting of CP504, CP505, and Q510), passed through buffer Q511 and a low-pass filter, and output to the TX-RX unit as the LO4 signal.

The LO4 signal is a local oscillator signal used to generate a DSP processing signal f from 455kHz. The f frequency is described in the local signal section (page 14).

■ Subtone generation

During FM transmission, the DSP generates a signal to which a subtone is added and is then sent to the main unit as it is.

■ PLL data

The TS-870S has three PLLs to which the main CPU sends PLL data based on the displayed frequency.

- PLL comprising a VFO (PLL section)
- Local oscillator PLL for frequency conversion (PLL section)
- PLL that generates timing clocks for digital signal processing (TX-RX unit)

The VCOs change with the following conditions.

- Main encoder change → VCO1 (PLL section)
- Mode change → VCO2 (PLL section)

Each PLL IC outputs an unlock signal. If any PLL is unlocked, the main display indicates ". . . . . " (dots). If the unlocked PLL is the TX-RX unit, the sub-display shows "Err-FD", and if it is the PLL unit, it shows "Err-FE" to indicate that it is unlocked.

The unlocking of each PLL is output to pin 11 (UL) of PLL IC : MB86001PF as unlock data (UNLOCK : LOW).

Loop	VCO No.	IC No.	Comparison frequency/divide ratio	Variable divide ratio	Frequency (MHz)
LO1	VCO1	IC507	1MHz/20	18~48	73.08~103.05
LO2	VCO2	IC509	20kHz/1000 5kHz/4000 : FM	3211 12844 : FM	64.22

CIRCUIT DESCRIPTION

■ DDS circuit configuration

The DDS IC has been developed with standard cells to implement a high-speed operation circuit and large-capacity ROM at a low cost.

1) IC configuration

The IC consists of the following components:

Two 28 bit registers for setting frequency data, one 28 bit frequency shift register for addition to the frequency register, a 23 bit parallel signal input section for frequency modulation with a parallel signal, and a data entry and selection section.

Frequency modulation section comprised of a 28 bit adder that adds frequency data and frequency modulation data

Phase data operation section that adds data from the frequency modulation section with the 28 bit phase data register

SIN-ROM that converts phase data to sine data.

2) Frequency/shift data setting

Using serial signals synchronized with clock pulses, a total of 30 bits (2 bits that specify the destination to which data are set and 28 bits for frequency data) are set in three internal registers.

3) Frequency register selection

The data set in the two frequency registers are selected by the SLAB input of the DDS IC. This pin handles the TXC signal. This function eliminates the need for the TS-870S microprocessor to set frequency data for each transmission and reception.

4) Frequency data selection

The SPSL input of the DDS IC selects whether to use the data in the internal frequency shift register or the data from parallel input as frequency modulation data.

5) Frequency modulation

The MDEN input of the DDS IC enables or disables frequency modulation. When frequency modulation is enabled, frequency data is added, and the result is input to the phase data operation section.

6) Phase data operation

The target frequency phase data is output by accumulating 28 bit frequency data in the 28 bit phase accumulator.

$Fout = Fs/2^{28} \cdot Dsum$

Fs : DDS IC input frequency/2

Dsum : Frequency data+Frequency modulation data

If 2^{25} is set for Dsum when 1/8 Fs is output, the phase data must be increased by $\pi/8$.

A 28 bit absolute value operation has been used here, but a 28 bit signed operation can also be used, assuming that the MSB is a sign. If complement data of 8000000 to FFFFFFFF (hex) is set, the phase moves in the negative direction for the positive data.

7) SIN-ROM

Phase data from the phase data operation section is converted to sine data of 0000 to FFFF (hex) in the 16 bit offset binary format.

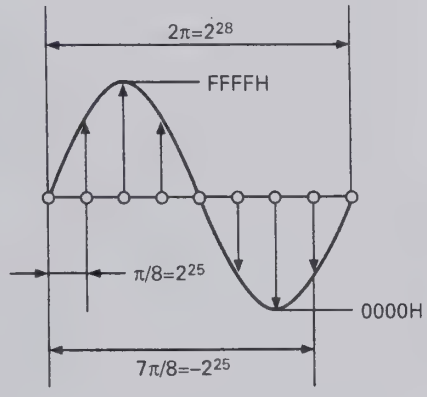

CIRCUIT DESCRIPTION

Receiver Circuit

The basic configuration of the receiver circuit is quadruple conversion. After the frequency is converted to the 11.3kHz fourth IF, the DSP carries out AGC, filtering, detection, and signal processing. Figure 3 is a receiver block diagram.

The signal coming from the antenna connector is passed through the antenna switching relay (K301) in the final unit (E/5 relay section), the antenna tuner unit, and the transmit/receive changeover relay (K302) within the relay section, and then goes to the CN2 (RAT) of the RF unit (A/9 RF section).

The signal input to the RF unit is passed through protection lamp PL1 for strong signal input, external receiver power distribution circuit L1 and L2 and switching circuit K1, and is input to the ATT (–6dB, –12dB) circuit. This distribution circuit is switched when the EXT RX (function that distributes the signals from the antenna to the external receiver), which is set from menu No.53, is turned ON. When this function is ON, the signal from the antenna is attenuated by about 4dB and output to the receiver section in the subsequent stage and the EXT RX terminal on the rear. The signal to the EXT RX terminal is passed through lamp PL2 for protection during transmission. The lamp turns OFF when about 10W is input.

The signal is passed through the ATT switching circuit, then goes to the BC band attenuation circuit (L7 to L9, C19 to C22). The BC band signal is attenuated by 5 to 10dB to prevent power saturation of the band-pass filter switching diode resulting from interference from a proximate station. The band-pass filter consists of two low-pass filters and 10 band-pass filters, and passes signals during transmission. The pin diode (1SV128) is used to change the input to raise the signal saturation level when a HIGH signal is input.

The RF amplifier circuit functions as a low-gain amplifier using Q14 and Q15 : 2SK2218(5) x 2 when the frequency is 21.49MHz or lower, and it functions as a high-gain amplifier using Q13 : 3SK131(M) when the frequency is higher than 21.49MHz. It is bypassed when AIP is ON.

The 73.05MHz first IF signal is generated by quad mixer Q17 to Q20 : 2SK520(K44) x 4. It is passed through XF1 73.05MHz MCF, Q24 : 3SK131(M) first mixer amplifier, and Q26 and Q27 : 2SK520(K43) mixer to produce a 8.83MHz second IF signal. The second IF signal is divided into two signals, one of which is branched to the noise blanker, amplified by amplifier Q28, and then goes to the NB circuit. The other signal is input to the second IF signal amplifier, and serves as a blanking gate by the NB and RBK signals. The amplified second IF signal is passed through the 8.83MHz IF filter, and output to the final unit (C/5 connection section) from CN10. This signal is switched with the diode switch D62 and D68, and functions as a second IF signal output during reception and a third IF signal input during transmission.

The second IF signal input to CN412 in the final unit (C/5 connection section) is routed to the receiver circuit by D450, and input to the mixer Q460 and Q461 to generate a 455kHz third IF signal. It is passed through the 455kHz IF filter, amplified by third IF amplifier Q475, and output by CN411 to the TX-RX unit as RIF signal. The total gain of the receiver unit is adjusted by VR1 in the TX-RX unit.

■ IF filter

The IF filter consists of a DSP digital filter. If there is a HIGH signal outside the DSP filter band, the analog to digital converter input level may be saturated, and the filter does not work properly. Thus, an analog filter is inserted between the second IF (8.83MHz) and the third IF (455kHz) so that it does not impair the DSP filter properties. To operate each filter properly, there are three kinds of filters for each IF signal and also slope tuning is carried out.

1) Filters characteristics

Item	Rating
Nominal center frequency	73.05MHz
Pass bandwidth	±7.5kHz or more at 3dB
Attenuation bandwidth	±30kHz or less at 40dB
Ripple	1.0dB or less
Insertion loss	3.0dB or less
Guaranteed attenuation	70dB or more at fo + (500 to 1000kHz) 70dB or more at fo – (200 to 1000kHz)
Center frequency deviation	Within ±1.5kHz at 3dB
Terminating impedance	2kΩ ± 10%

MCF (L71-0401-05) : RF unit XF1

Item	Rating
Nominal center frequency	8830kHz
Center frequency deviation	Within ±150Hz at 6dB
Pass bandwidth	±1.5kHz or more at 6dB
Attenuation bandwidth	±1.9kHz or less at 20dB ±2.75kHz or less at 60dB ±3.5kHz or less at 80dB
Ripple	2dB or less
Insertion loss	6dB or less
Guaranteed attenuation	80dB or more in the range ±3.5kHz to ±1MHz
Terminating impedance	600Ω / 15pF

MCF (L71-0235-05) : RF unit XF2

Item	Rating
Nominal center frequency	8830kHz
Pass bandwidth	±3.0kHz or more at 6dB
Attenuation bandwidth	±16.0kHz or less at 60dB ±13.0kHz or less at 50dB
Guaranteed attenuation	70dB or more with in fo ± 1MHz (Without spurious in the range fo to fo+500kHz)
Ripple	Within 1.0dB
Insertion loss	Within 1.5dB
Terminating impedance	1850kΩ / 2pF

MCF (L71-0266-05) : RF unit XF3

Item	Rating
Nominal center frequency	8.400MHz
3dB attenuation bandwidth	Within 180 ± 40kHz
20dB attenuation bandwidth	400kHz or less
Insertion loss	9.0dB or less Formula : 20 x log [E1÷ (2 x E2)]
Ripple	1.0dB or less (within 3dB band)
Spurious attenuation	25dB or more (6.0 to 10.0MHz)
Voltage capacity	50V DC (1 minute)
Insulating resistance	100MΩ or more (100V DC)
Input and output impedance	330Ω

Ceramic filter (L72-0343-05) : RF unit CF500, 501

Item	Rating
Nominal center frequency	455kHz
6dB bandwidth	±3kHz (455kHz)
50dB bandwidth	±9kHz (455kHz)
Ripple	2dB or less (within 455+2kHz)
Insertion loss	6dB or less
Guaranteed attenuation	60dB or more (within 455±100kHz)
Input and output impedance	2.0kΩ

Ceramic filter (L72-0319-05) : Final unit CF451

Item	Rating
Center frequency	455±0.20kHz
6dB bandwidth	2.9 to 3.2kHz
60dB bandwidth	4.7kHz or less
Guaranteed attenuation	60dB or more at 0.1 to 1MHz
Spurious	40dB or more at 600 to 700kHz
6dB band ripple	2dB or less
Insertion loss	6dB or less
Input and output impedance	2kΩ

Ceramic filter (L72-0333-05) : Final unit CF452

Item	Rating
Nominal center frequency	455kHz
6dB bandwidth	±7.5kHz or more (455kHz)
50dB bandwidth	±15kHz or less (455kHz)
Ripple	3dB or less (within 455+5kHz)
Insertion loss	6dB or less
Guaranteed attenuation	35dB or more (within 455±100kHz)
Input and output impedance	1.5kΩ

Ceramic filter (L72-0366-05) : Final unit CF453

CIRCUIT DESCRIPTION

Receiver Circuit

The basic configuration of the receiver circuit is quadruple conversion. After the frequency is converted to the 11.3kHz fourth IF, the DSP carries out AGC, filtering, detection, and signal processing. Figure 3 is a receiver block diagram.

The signal coming from the antenna connector is passed through the antenna switching relay (K301) in the final unit (E/5 relay section), the antenna tuner unit, and the transmit/receive changeover relay (K302) within the relay section, and then goes to the CN2 (RAT) of the RF unit (A/9 RF section).

The signal input to the RF unit is passed through protection lamp PL1 for strong signal input, external receiver power distribution circuit L1 and L2 and switching circuit K1, and is input to the ATT (–6dB, –12dB) circuit. This distribution circuit is switched when the EXT RX (function that distributes the signals from the antenna to the external receiver), which is set from menu No.53, is turned ON. When this function is ON, the signal from the antenna is attenuated by about 4dB and output to the receiver section in the subsequent stage and the EXT RX terminal on the rear. The signal to the EXT RX terminal is passed through lamp PL2 for protection during transmission. The lamp turns OFF when about 10W is input.

The signal is passed through the ATT switching circuit, then goes to the BC band attenuation circuit (L7 to L9, C19 to C22). The BC band signal is attenuated by 5 to 10dB to prevent power saturation of the band-pass filter switching diode resulting from interference from a proximate station. The band-pass filter consists of two low-pass filters and 10 band-pass filters, and passes signals during transmission. The pin diode (1SV128) is used to change the input to raise the signal saturation level when a HIGH signal is input.

The RF amplifier circuit functions as a low-gain amplifier using Q14 and Q15 : 2SK2218(5) x 2 when the frequency is 21.49MHz or lower, and it functions as a high-gain amplifier using Q13 : 3SK131(M) when the frequency is higher than 21.49MHz. It is bypassed when AIP is ON.

The 73.05MHz first IF signal is generated by quad mixer Q17 to Q20 : 2SK520(K44) x 4. It is passed through XF1 73.05MHz MCF, Q24 : 3SK131(M) first mixer amplifier, and Q26 and Q27 : 2SK520(K43) mixer to produce a 8.83MHz second IF signal. The second IF signal is divided into two signals, one of which is branched to the noise blanker, amplified by amplifier Q28, and then goes to the NB circuit. The other signal is input to the second IF signal amplifier, and serves as a blanking gate by the NB and RBK signals. The amplified second IF signal is passed through the 8.83MHz IF filter, and output to the final unit (C/5 connection section) from CN10. This signal is switched with the diode switch D62 and D68, and functions as a second IF signal output during reception and a third IF signal input during transmission.

The second IF signal input to CN412 in the final unit (C/5 connection section) is routed to the receiver circuit by D450, and input to the mixer Q460 and Q461 to generate a 455kHz third IF signal. It is passed through the 455kHz IF filter, amplified by third IF amplifier Q475, and output by CN411 to the TX-RX unit as RIF signal. The total gain of the receiver unit is adjusted by VR1 in the TX-RX unit.

CIRCUIT DESCRIPTION

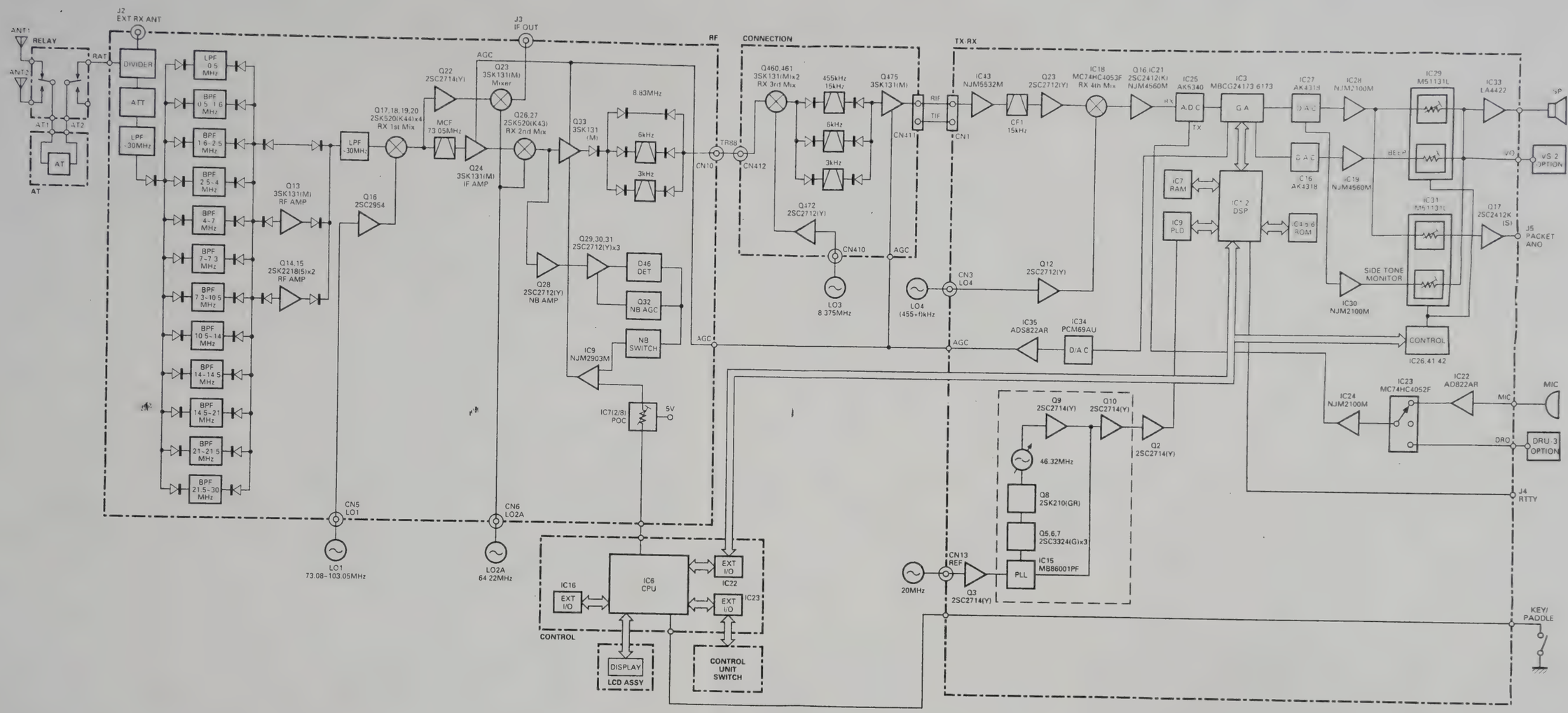

Fig. 3 Receiver block diagram

CIRCUIT DESCRIPTION

■ IF gain correction

The total gain changes when the AIP is turned ON or OFF or the band is 21.49MHz or higher. To limit the changes, the DSP corrects the IF gain. Table 2 lists the corrections. When the "AIP S-meter correction" on menu No.11 is turned ON, the S-meter is corrected when the AIP is turned ON. And since the IF gain is corrected greatly, the receiver internal noise output becomes large.

Frequency	Correction (dB)			Pre-amp gain (dB) reference
	AIP			
	OFF	ON1 (Menu 11 OFF)	ON2 (Menu 11 ON) SSB, CW, FSK only	
30kHz~ 21.49MHz	–2	0	+12	15
21.49MHz~ 30.MHz	–7	0	+12	21

Table 2 IF gain corrections

■ NB circuit

The noise blanker, like the conventional one, branches the signal before the narrow-band filter of the 8.83MHz second IF, and detects noise, and performs blanking using the second IF amplifier as a gate. The signal is amplified by Q28, detected by the AGC amplification and noise detection circuit consisting of Q29 to Q32 and D46, and then a blanking pulse is generated by the IC9 comparator. The noise detection circuit Q29 to Q32 and D46 is separated into segments by a jumper in the unit to prevent sneak path.

■ Slope tune

The operating principle of SSB-SLOPE-TUNE is explained first. When f_{LO1}, f_{LO3}, and f_{LO4} in Figure 4 are at their normal frequencies, the synthesized bandwidth is indicated by A. If the f_{LO1} frequency is increased by $\Delta f1$ and the f_{LO3} frequency is decreased by $\Delta f1$, the filter of the 8.83MHz band shifts to position B. The synthesized bandwidth is indicated by the section overlapped by A and B. When the frequencies of f_{LO1} and f_{LO3} are lowered by $\Delta f2$, only the 455kHz second IF filter shifts to position C. The synthesized bandwidth is indicated by the section overlapped by B and C.

Therefore, high frequencies are cut off by increasing the f_{LO1} frequency and decreasing the f_{LO3} frequency. Low frequencies are cut off by decreasing the f_{LO3} and f_{LO4} frequencies. The TS-870S enables these operations using the DSP filter.

In SSB mode, slope tune high cut/low cut is switched by using the filter select control : in CW mode, the WIDTH (bandwidth)/SHIFT (center frequency) is changed, and in FSK mode, the WIDTH (bandwidth) is changed. The microcomputer in the control unit sends filter select data to the DSP, and slope tuning is carried out by changing frequency data given to the PLL and DDS. The second IF (8.83MHz) and third IF (455kHz) filters are selected to carry out slope tuning effectively. Tables 3 and 4 list filter selections, slope tuning and analog filter high cut/low cut amounts. Slope tuning low cut/high cut can be switched in AM mode, and the WIDTH can be switched in FM mode by using DSP filters only, and the analog filter is fixed to 15kHz.

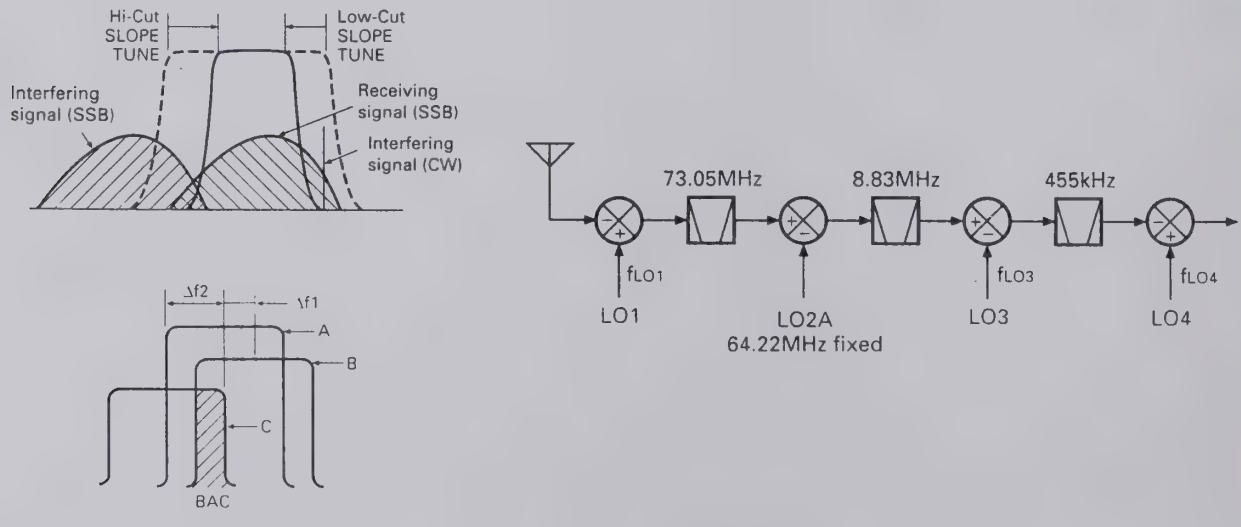

Fig. 4 SSB slope tune operating principle

CIRCUIT DESCRIPTION

	1.4k	1.6k	1.8k	2.0k	2.2k	2.4k	2.6k	2.8k	3.0k	3.4k	4.6k	6.0k
0 (Hz)	1.0k	0.8k	0.6k	0.4k	0.2k	0.0k	1.4k	1.2k	1.0k	0.6k	0.0k	0.0k
50	↑	↑	↑	↑	↑	↑	↑	↑	↑	↑	↑	↑
100	↑	↑	↑	↑	↑	↑	↑	↑	↑	↑	↑	↑
200	↑	↑	↑	↑	↑	↑	–0.2k	↑	↑	↑	↑	↑
300	↑	↑	↑	↑	↑	↑	↑	↑	↑	↑	↑	↑
400	↑	↑	↑	↑	↑	↑	↑	–0.4k	↑	↑	↑	↑
500	↑	↑	↑	↑	↑	↑	↑	↑	↑	↑	↑	↑
600	↑	↑	↑	↑	↑	↑	↑	↑	–0.6k	↑	↑	↑
800	↑	↑	↑	↑	↑	↑	↑	↑	↑	↑	–0.6k	↑
1000	↑	↑	↑	↑	↑	↑	↑	↑	↑	–1.0k	↑	↑

← High cut position

Filter selection
- 3kHz filter
- 6kHz filter
- 15kHz filter
- Default

↑ Low cut posotion (455kHz filter) Low cut amount

(8.83MHz filter) High cut amount

Table 3 SSB slop tuning and analog filter high/low cut (Hz)

	400	450	500	550	600	650	700	750	800	850	900	950	1000
50 (Hz)	375	425	475	525	575	625	675	725	775	825	875	925	975
100	350	400	450	500	550	600	650	700	750	800	850	900	950
200	300	350	400	450	500	550	600	650	700	750	800	850	900
400	200	250	300	350	400	450	500	550	600	650	700	750	800
600	100	150	200	250	300	350	400	450	500	550	600	650	700
1000	–100	–50	0	50	100	150	200	250	300	350	400	450	500

← Filter center position

Default

↑ Filter width

Table 4-1 CW WIDTH/SHIFT low cut amount (Hz)

	400	450	500	550	600	650	700	750	800	850	900	950	1000
50 (Hz)	1975	1925	1875	1825	1775	1725	1675	1625	1575	1525	1475	1425	1375
100	1950	1900	1850	1800	1750	1700	1650	1600	1550	1500	1450	1400	1350
200	1900	1850	1800	1750	1700	1650	1600	1550	1500	1450	1400	1350	1300
400	1800	1750	1700	1650	1600	1550	1500	1450	1400	1350	1300	1250	1200
600	1700	1650	1600	1550	1500	1450	1400	1350	1300	1250	1200	1150	1100
1000	1500	1450	1400	1350	1300	1250	1200	1150	1100	1050	1000	950	900

← Filter center position

Default

↑ Filter width

Table 4-2 CW WIDTH/SHIFT high cut amount (Hz)

■ IF filter

The IF filter consists of a DSP digital filter. If there is a HIGH signal outside the DSP filter band, the analog to digital converter input level may be saturated, and the filter does not work properly. Thus, an analog filter is inserted between the second IF (8.83MHz) and the third IF (455kHz) so that it does not impair the DSP filter properties. To operate each filter properly, there are three kinds of filters for each IF signal and also slope tuning is carried out.

1) Filters characteristics

Item	Rating
Nominal center frequency	73.05MHz
Pass bandwidth	±7.5kHz or more at 3dB
Attenuation bandwidth	±30kHz or less at 40dB
Ripple	1.0dB or less
Insertion loss	3.0dB or less
Guaranteed attenuation	70dB or more at fo + (500 to 1000kHz) 70dB or more at fo – (200 to 1000kHz)
Center frequency deviation	Within ±1.5kHz at 3dB
Terminating impedance	2kΩ ± 10%

MCF (L71-0401-05) : RF unit XF1

Item	Rating
Nominal center frequency	8830kHz
Center frequency deviation	Within ±150Hz at 6dB
Pass bandwidth	±1.5kHz or more at 6dB
Attenuation bandwidth	±1.9kHz or less at 20dB ±2.75kHz or less at 60dB ±3.5kHz or less at 80dB
Ripple	2dB or less
Insertion loss	6dB or less
Guaranteed attenuation	80dB or more in the range ±3.5kHz to ±1MHz
Terminating impedance	600Ω / 15pF

MCF (L71-0235-05) : RF unit XF2

Item	Rating
Nominal center frequency	8830kHz
Pass bandwidth	±3.0kHz or more at 6dB
Attenuation bandwidth	±16.0kHz or less at 60dB ±13.0kHz or less at 50dB
Guaranteed attenuation	70dB or more with in fo ± 1MHz (Without spurious in the range fo to fo+500kHz)
Ripple	Within 1.0dB
Insertion loss	Within 1.5dB
Terminating impedance	1850kΩ / 2pF

MCF (L71-0266-05) : RF unit XF3

Item	Rating
Nominal center frequency	8.400MHz
3dB attenuation bandwidth	Within 180 ± 40kHz
20dB attenuation bandwidth	400kHz or less
Insertion loss	9.0dB or less Formula : 20 x log [E1÷ (2 x E2)]
Ripple	1.0dB or less (within 3dB band)
Spurious attenuation	25dB or more (6.0 to 10.0MHz)
Voltage capacity	50V DC (1 minute)
Insulating resistance	100MΩ or more (100V DC)
Input and output impedance	330Ω

Ceramic filter (L72-0343-05) : RF unit CF500, 501

Item	Rating
Nominal center frequency	455kHz
6dB bandwidth	±3kHz (455kHz)
50dB bandwidth	±9kHz (455kHz)
Ripple	2dB or less (within 455+2kHz)
Insertion loss	6dB or less
Guaranteed attenuation	60dB or more (within 455±100kHz)
Input and output impedance	2.0kΩ

Ceramic filter (L72-0319-05) : Final unit CF451

Item	Rating
Center frequency	455±0.20kHz
6dB bandwidth	2.9 to 3.2kHz
60dB bandwidth	4.7kHz or less
Guaranteed attenuation	60dB or more at 0.1 to 1MHz
Spurious	40dB or more at 600 to 700kHz
6dB band ripple	2dB or less
Insertion loss	6dB or less
Input and output impedance	2kΩ

Ceramic filter (L72-0333-05) : Final unit CF452

Item	Rating
Nominal center frequency	455kHz
6dB bandwidth	±7.5kHz or more (455kHz)
50dB bandwidth	±15kHz or less (455kHz)
Ripple	3dB or less (within 455+5kHz)
Insertion loss	6dB or less
Guaranteed attenuation	35dB or more (within 455±100kHz)
Input and output impedance	1.5kΩ

Ceramic filter (L72-0366-05) : Final unit CF453

■ IF gain correction

The total gain changes when the AIP is turned ON or OFF or the band is 21.49MHz or higher. To limit the changes, the DSP corrects the IF gain. Table 2 lists the corrections. When the "AIP S-meter correction" on menu No.11 is turned ON, the S-meter is corrected when the AIP is turned ON. And since the IF gain is corrected greatly, the receiver internal noise output becomes large.

Frequency	Correction (dB)			Pre-amp gain (dB) reference
	AIP			
	OFF	ON1 (Menu 11 OFF)	ON2 (Menu 11 ON) SSB, CW, FSK only	
30kHz~ 21.49MHz	–2	0	+12	15
21.49MHz~ 30.MHz	–7	0	+12	21

Table 2 IF gain corrections

■ NB circuit

The noise blanker, like the conventional one, branches the signal before the narrow-band filter of the 8.83MHz second IF, and detects noise, and performs blanking using the second IF amplifier as a gate. The signal is amplified by Q28, detected by the AGC amplification and noise detection circuit consisting of Q29 to Q32 and D46, and then a blanking pulse is generated by the IC9 comparator. The noise detection circuit Q29 to Q32 and D46 is separated into segments by a jumper in the unit to prevent sneak path.

■ Slope tune

The operating principle of SSB-SLOPE-TUNE is explained first. When f_{LO1}, f_{LO3}, and f_{LO4} in Figure 4 are at their normal frequencies, the synthesized bandwidth is indicated by A. If the f_{LO1} frequency is increased by $\Delta f1$ and the f_{LO3} frequency is decreased by $\Delta f1$, the filter of the 8.83MHz band shifts to position B. The synthesized bandwidth is indicated by the section overlapped by A and B. When the frequencies of f_{LO1} and f_{LO3} are lowered by $\Delta f2$, only the 455kHz second IF filter shifts to position C. The synthesized bandwidth is indicated by the section overlapped by B and C.

Therefore, high frequencies are cut off by increasing the f_{LO1} frequency and decreasing the f_{LO3} frequency. Low frequencies are cut off by decreasing the f_{LO3} and f_{LO4} frequencies. The TS-870S enables these operations using the DSP filter.

In SSB mode, slope tune high cut/low cut is switched by using the filter select control : in CW mode, the WIDTH (bandwidth)/SHIFT (center frequency) is changed, and in FSK mode, the WIDTH (bandwidth) is changed. The microcomputer in the control unit sends filter select data to the DSP, and slope tuning is carried out by changing frequency data given to the PLL and DDS. The second IF (8.83MHz) and third IF (455kHz) filters are selected to carry out slope tuning effectively. Tables 3 and 4 list filter selections, slope tuning and analog filter high cut/low cut amounts. Slope tuning low cut/high cut can be switched in AM mode, and the WIDTH can be switched in FM mode by using DSP filters only, and the analog filter is fixed to 15kHz.

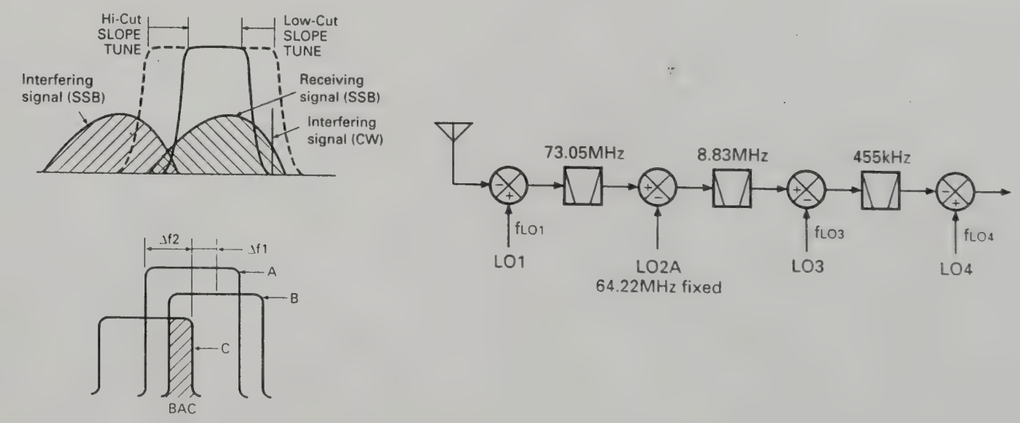

Fig. 4 SSB slope tune operating principle

CIRCUIT DESCRIPTION

	1.4k	1.6k	1.8k	2.0k	2.2k	2.4k	2.6k	2.8k	3.0k	3.4k	4.6k	6.0k
0 (Hz)	1.0k	0.8k	0.6k	0.4k	0.2k	0.0k	1.4k	1.2k	1.0k	0.6k	0.0k	0.0k
50	↑	↑	↑	↑	↑	↑	↑	↑	↑	↑	↑	↑
100	↑	↑	↑	↑	↑	↑	↑	↑	↑	↑	↑	↑
200	↑	↑	↑	↑	↑	↑	−0.2k	↑	↑	↑	↑	↑
300	↑	↑	↑	↑	↑	↑	↑	↑	↑	↑	↑	↑
400	↑	↑	↑	↑	↑	↑	↑	−0.4k	↑	↑	↑	↑
500	↑	↑	↑	↑	↑	↑	↑	↑	↑	↑	↑	↑
600	↑	↑	↑	↑	↑	↑	↑	↑	−0.6k	↑	↑	↑
800	↑	↑	↑	↑	↑	↑	↑	↑	↑	↑	−0.6k	↑
1000	↑	↑	↑	↑	↑	↑	↑	↑	↑	−1.0k	↑	↑

← High cut position

Filter selection
- 3kHz filter
- 6kHz filter
- 15kHz filter
- Default

↑
Low cut posotion
(455kHz filter) Low cut amount

(8.83MHz filter) High cut amount

Table 3 SSB slop tuning and analog filter high/low cut (Hz)

	400	450	500	550	600	650	700	750	800	850	900	950	1000
50 (Hz)	375	425	475	525	575	625	675	725	775	825	875	925	975
100	350	400	450	500	550	600	650	700	750	800	850	900	950
200	300	350	400	450	500	550	600	650	700	750	800	850	900
400	200	250	300	350	400	450	500	550	600	650	700	750	800
600	100	150	200	250	300	350	400	450	500	550	600	650	700
1000	−100	−50	0	50	100	150	200	250	300	350	400	450	500

← Filter center position

Default

↑
Filter width

Table 4-1 CW WIDTH/SHIFT low cut amount (Hz)

	400	450	500	550	600	650	700	750	800	850	900	950	1000
50 (Hz)	1975	1925	1875	1825	1775	1725	1675	1625	1575	1525	1475	1425	1375
100	1950	1900	1850	1800	1750	1700	1650	1600	1550	1500	1450	1400	1350
200	1900	1850	1800	1750	1700	1650	1600	1550	1500	1450	1400	1350	1300
400	1800	1750	1700	1650	1600	1550	1500	1450	1400	1350	1300	1250	1200
600	1700	1650	1600	1550	1500	1450	1400	1350	1300	1250	1200	1150	1100
1000	1500	1450	1400	1350	1300	1250	1200	1150	1100	1050	1000	950	900

← Filter center position

Default

↑
Filter width

Table 4-2 CW WIDTH/SHIFT high cut amount (Hz)

CIRCUIT DESCRIPTION

■ Local signals (LO1, LO3, LO4)

1) LO1

Table 5 lists LO1 frequency configuration.

DDS1 varies from 0.46 to 1.46MHz, and when the display frequency is multiple MHz (for example, 14.000MHz), 0.96MHz is output. When the display frequency is increased, the DDS1 frequency is reduced by the amount of change. When the DDS1 frequency is reduced to 0.46MHz, the frequency is switched to 1.46MHz, and when it is increased to 1MHz, the frequency returns to 0.96MHz (Figure 5). By changing the 1MHz band in synchronization with the display frequency, the 1MHz comparison PLL circuit is locked and LO1 is generated.

In Table 5, the 0.96MHz base indicates the DDS output when the frequency is multiple MHz. The frequency (UNV) indicates the decimal digits of the MHz frequency. (If the display frequency is 14.2MHz, (UNV) = 0.2MHz.) DDS is switched by 500kHz, so – 0.5MHz ≤ (UNV) < 0.5MHz.

As described in the slope tuning section, slope tuning high-cutting is corrected for LO1, so the correction is added to the DDS output. SSB H in Table 5 indicates the correction. Table 3 shows the actual correction of SSB H. (For example, when the high frequency is 2.2kHz, the correction SSB H is 0.2kHz.)

Since RIT and XIT change the receive and transmit frequencies by the preset amount, it needs to be corrected. They are D RIT and D XIT in Table 5.

The "8.83MHz window-joining" (D 883) in Table 5 is determined during adjustment. For example, the equation for calculating the DDS output frequency for 14.2MHz USB. The high-cut frequency is assumed to be 2.6kHz. (D 833 is zero.)

DDS1 : 0.96M – (UNV) – (OFS SSB) + (SSB H)
= 0.96M – 0.2M – 1.2k – 0.2k
= 758.6kHz
0.96M : Base
UNV : 14.2M – 14.0M = 0.2M
OFS SSB (Filter offset) : 1.2k
SSB H (Slope HI) : –0.2k (See table 3.)

The LO1 output frequency f_{LO1} is calculated from the frequency configuration in Figure 6.

$f_{LO1} = f_{PLL\ IN} + 60MHz - (4MHz + f_{DDS1})$
$= 32MHz + 60MHz - (4MHz + 758.6kHz)$
$= 87.2414MHz$

Where $f_{PLL\ IN}$ is the PLL input frequency and f_{DDS1} is the DDS1 output frequency.

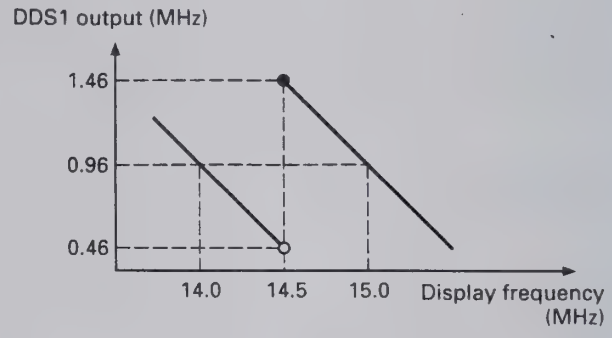

Fig. 5 Relationship between display frequency and DDS output frequency

2) LO3

Table 6 lists the LO3 frequency configuration.

The LO3 frequency is 8.375MHz, and is generated by the chopper circuit. The DDS2 output frequency is 1.625MHz. For LO3, slope tuning low-cut/high-cut is corrected. SSB H and SSB L in Table 6 indicate the corrections. D 833 and D 455 are values determined during filter window-joining and adjustment.

For example, if USB is 14.2MHz, high-cut frequency is 2.6kHz, and low-cut frequency is 300Hz, the LO3 frequency is calculated as follows. It is assumed that D 833 and D 455 are zero.

$f_{LO3} = 1.625MHz + (SSB\ H) + (SSB\ L)$
$= 1.625MHz + (-0.2kHz) + 300Hz$
$= 1625.1kHz$

CIRCUIT DESCRIPTION

3) LO4

Table 7 lists the LO4 frequency configuration.

For LO4, correction (OFS SSB) is carried out so that a signal passes through a filter according to the mode, and the slope tune low-cut (SSB L) is corrected. The mode offset is the frequency (11.30859375kHz) used for processing by the DSP, and its sign changes with the mode.

For example, if USB is 14.2MHz and the low-cut frequency is 300Hz, the LO4 output frequency is calculated as follows.

f_{LO4} = 455kHz + (mode offset) + (OFS SSB) + (SSB L)
= 455kHz + 11.30859375kHz + 300Hz
= 467.8085938kHz

The filter is corrected according to each mode by LO1 and LO4, slope tuning high-cut is corrected by LO1 and LO3, and low-cut is corrected by LO3 and LO4.

In other modes, each local frequency is determined by the calculation method as shown previously in Tables 5 to 7.

Component	DDS1 (1HZ)															
	LSB		USB		CW		CW-R		FSK		FSK-R		AM		FM	
	RX	TX	RX	TX	RX	TX	RX	TX	RX	TX	RX	TX	RX	TX	RX	TX
BASE	0.96MHz*6															
Frequency (100kHz or less)	– (UNV)															
Mode offset																
Filter offset*1	+ (OFS SSB)	+2k	- (OFS SSB)	–2k	–800		+800									
CW pitch					+ (PITCH)		– (PITCH)									
FSK tone (H/L)																
FSK shift (polarity)																
RIT	– (D RIT)		– (D RIT)		– (D RIT)		– (D RIT)		– (D RIT)		– (D RIT)		– (D RIT)		– (D RIT)	
XIT		– (D RIT)		– (D RIT)		– (D RIT)		– (D RIT)		– (D RIT)		– (D RIT)		– (D RIT)		– (D RIT)
Slope high*2, 3	– (SSB H)		+ (SSB H)		+ (CW H)		– (CW H)		– (FSK H)		+ (FSK H)					
Slope low																
8.83MHz window-joining*4, 5	– (D 883)			+ (D 883)												
455kHz window-joining																

*1 : Although receiver data has an independent value for each mode, the data area for calculation is D OFFSET.
Transmitter data is fixed because the 8.83MHz filter bandwidth is fixed.

*2 : Although it has an independent value for each mode, the data area for calculation is D SLOP L.

*3 : The slope low-cut is carried out at 455kHz and high-cut is carried out at 8.83MHz.

*4 : The LSB and USB may have the same value because the filter bandwidth is wide.

*5 : The positive direction for adjustment is the direction in which the receive carrier frequency increases.

*6 : The DDS1 variable frequency is 1.45MHz and is shifted by 500kHz.

Table 5 LO1 frequency configuration

CIRCUIT DESCRIPTION

Component	DDS2 (LO3)															
	LSB		USB		CW		CW-R		FSK		FSK-R		AM		FM	
	RX	TX	RX	TX	RX	TX	RX	TX	RX	TX	RX	TX	RX	TX	RX	TX
BASE	1.625MHz*6															
Mode offset																
Filter offset																
CW pitch																
FSK tone (H/L)																
FSK shift (polarity)																
RIT/XIT																
Slope high*1, 3	– (SSB H)		+ (SSB H)		+ (CW H)		– (CW H)		– (FSK H)		+ (FSK H)					
Slope low*2, 3	– (SSB L)		+ (SSB L)		+ (CW L)		– (CW L)		– (FSK L)		+ (FSK L)					
8.83MHz window-joining*4, 5	– (D 883)			+ (D 883)												
455kHz window-joining*4, 5	+ (D 455)			– (D 455)												

*1 : Although it has an independent value for each mode.

*2 : Although it has an independent value for each mode.

*3 : The slope low-cut is carried out at 455kHz and high-cut is carried out at 8.83MHz.

*4 : The LSB and USB may have the same value because the filter bandwidth is wide.

*5 : The positive direction for adjustment is the direction in which the receive carrier frequency increases.

*6 : Since the DDS2 output frequency is high, 1.625MHz (10MHz – output frequency (8.375MHz)) is output to the DDS.

Table 6 LO3 frequency configuration

Component	DDS3 (LO4)															
	LSB		USB		CW		CW-R		FSK		FSK-R		AM		FM	
	RX	TX	RX	TX	RX	TX	RX	TX	RX	TX	RX	TX	RX	TX	RX	TX
BASE	455kHz															
Mode offset (kHz)	–11.30859375		+11.30859375		+11.30859375		–11.30859375		–11.30859375		+11.30859375		+11.30859375		+11.30859375	
Filter offset*1	– (OFS SSB)	–2k	+ (OFS SSB)	+2k	+800		–800									
CW pitch																
FSK tone (H/L)									–2125 /–1275		+2125 /+1275					
FSK shift (polarity)											+ (FSK S)	+ (FSK S)				
RIT/XIT																
Slope high																
Slope low*2, 3	– (SSB L)		+ (SSB L)		+ (CW L)		– (CW L)		– (FSK L)		+ (FSK L)					
8.83MHz window-joining																
455kHz window-joining*4, 5	– (D 455)			+ (D 455)												

*1 : Although receiver data has an independent value for each mode.
Transmitter data is fixed because the 8.83MHz filter bandwidth is fixed.

*2 : Although it has an independent value for each mode.

*3 : The slope low-cut is carried out at 455kHz and high-cut is carried out at 8.83MHz.

*4 : The LSB and USB may have the same value because the filter bandwidth is wide.

*5 : The positive direction for adjustment is the direction in which the receive carrier frequency increases.

Table 7 LO4 frequency configuration

CIRCUIT DESCRIPTION

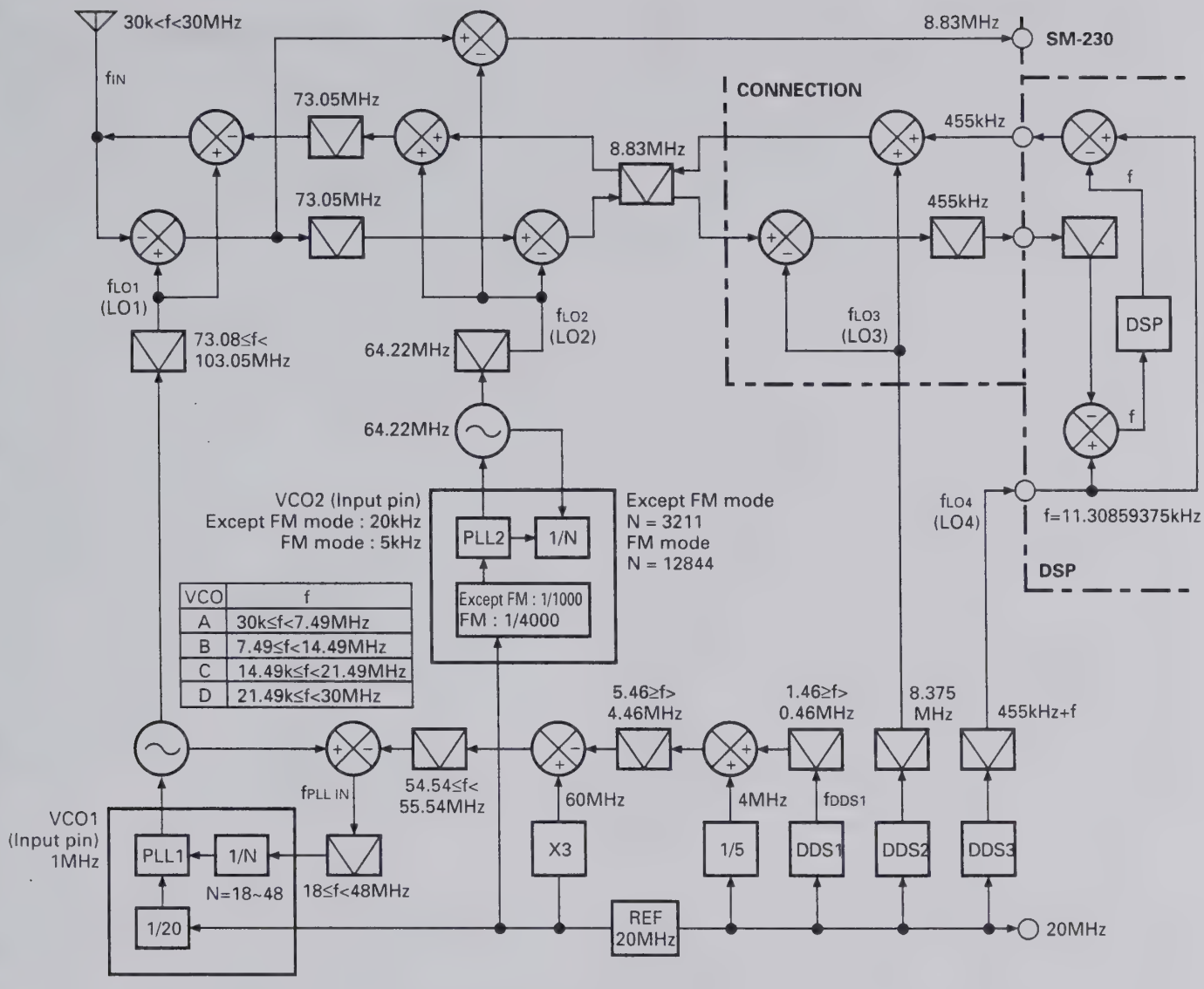

Fig. 6 Frequency configuration

CIRCUIT DESCRIPTION

Transmitter Circuit

The transmitter system block diagram is shown in Figure 7.

The TS-870S has the same frequency configuration as the TS-850 after the DSP generates the IF signal and converts it to 455kHz as a basic configuration.

A difference from the conventional model other than DSP modulation is that the TS-870S uses a digital-to-analog converter and a microcomputer for various controls. This allows for fine control and reduces the number of controls needed for adjustment.

The TIF (second IF) signal output from the TX-RX unit goes to the final unit (C/5 connection section). The signal is converted from 455kHz to 8.83MHz. The 8.83MHz third IF signal converted by the Q470 and Q471: 3SK131(M) mixer is switched to the transmitter by the D450 diode switch, and output from CN412 to the RF unit (A/9 RF section) as TR88 signal.

The signal input to CN10 of the RF unit is passed through the 8.83MHz IF filter used for both transmission and reception. During transmission, XF3 BW: 5kHz is selected by D69 and D67 and the filter attenuates the components outside the band. The transmit signal switched by D68 is amplified and ALC-controlled by the Q39 ALC amplifier, and the resulting signal goes to the D49 TX gain control circuit. This circuit controls the gain at the transmission stage according to the given voltage via a variable attenuator of a pin diode. The control voltage is controlled by a microprocessor, and is used to set the gain for each band or set the gain with the PWR knob and mode.

The third IF signal is then converted to the 73.05MHz fourth IF signal by the Q37 and Q38 : 3SK131(M) mixer. The signal is passed through the LC filter, and is converted to the target frequency by the final local oscillator LO1 at the Q35 and Q36 : 3SK184(R) mixer. The signal is passed through the radiation filter and the band-pass filter used by both the transmitter and receiver sections to attenuate the spurious outside the band. The band-pass filter output is amplified by Q5 : 2SC2954, and output to the final unit (A/5 final section) from CN4 as the drive signal.

■ TX-AGC

The DSP controls the input level until it starts modulation. It is like AGC applied to the microphone amplifier, and when the input level exceeds the certain level, the amplifier gain decreases to keep the modulator input level constant, i.e., to keep the IF output constant.

The MIC gain control in SSB and AM modes is used to adjust the maximum gain of the AGC amplifier in the 40dB range. Even if the control is set maximum, the input level to the modulator is kept constant. If the PROC is OFF in SSB mode, the CAR level (TIF output level) is fixed, and the ALC effect is limited. If the PROC is ON in SSB mode, the ALC effect is adjusted by the CAR control. The microphone amplifier gain is fixed, but the speech processor input level is controlled by the AGC and then becomes the level set by the PROC control.

In FM mode, the microphone amplifier sensitivity can be changed to high or low by using Menu No.61. Since the frequency deviation is limited by the TX-AGC, it is not distorted extremely like in the clipper method. In AM mode, the sensitivity is controlled so that modulation does not exceed 70%.

The TX-AGC is required to stabilize the DSP modulator operation. The modulator may operate without using the AGC by reduction of the gain and input level, but it cannot be completely turned OFF. Care must therefore be taken when measuring the ALC properties and frequency characteristics.

CIRCUIT DESCRIPTION

AT Unit (Auto Antenna Tuner)

When the AUTO/THROUGH switch is set to AUTO, ATA goes LOW, the AUTO/THROUGH switching relay K1 is executed, and AT is inserted to prepare for tuning. If "RX AT ON" is set in menu No.8, AT is inserted during reception. If the position of variable capacitor VC1 or VC2 is not the preset position of the band, presetting is performed. The AT tune and transmission do not occur until presetting ends.

When AT TUNE is turned on with this condition, ATS goes HIGH, the CW mode is set, and the transmission output becomes about 10W. If the SWR is lower than 1.2, the tuning is completed and auto antenna tuning ends. If the SWR is greater than 1.2, the motor control pulse duty (described later) is controlled according to the SWR.

The SWR can be set to 1.6 after AT tuning by turning menu No. 33 "TUNE WIDE" ON.

The motor speed is determined by a microcomputer. Its direction is controlled by phase comparator IC1 and amplitude comparator IC6 if the APRE is LOW, and controlled by the microcomputer if the APRE is HIGH.

■ Auto tuning mode

The transmission power from the final section via the filter section is passed through the current/voltage detection transformer L1 and L2, which use a troidal core. The current and voltage components detected here are rectified by the waveform rectification circuit consisting of D4, D7, Q1, and Q2, and then the phase is compared by IC1. The output signals ($\overline{Q}$ and Q) from pins 8 and 9 of IC1 are passed through the switch by IC2 and are applied to motor drive IC IC4. Variable capacitor VC1 is rotated by the motor M1 so that the phase difference of the voltage and current components decreases.

The voltage and current components detected by L1 and L2 are rectified by diodes D1 and D2 and are applied to the comparator of voltage comparison circuit IC6 as the amplitude component. The comparator output is passed through switch IC3. Motor M2 is driven by another motor drive IC IC5 and variable capacitor VC2 is rotated in the direction that decreases the amplitude difference of the voltage and current components.

Variable capacitor VC1 for capacity adjustment is therefore controlled so that the current and voltage phases match. Variable capacitor VC2 for resistance adjustment is controlled so that the current and voltage amplitude difference decreases. SWR becomes 1 when the phases match and the amplitude difference is zero.

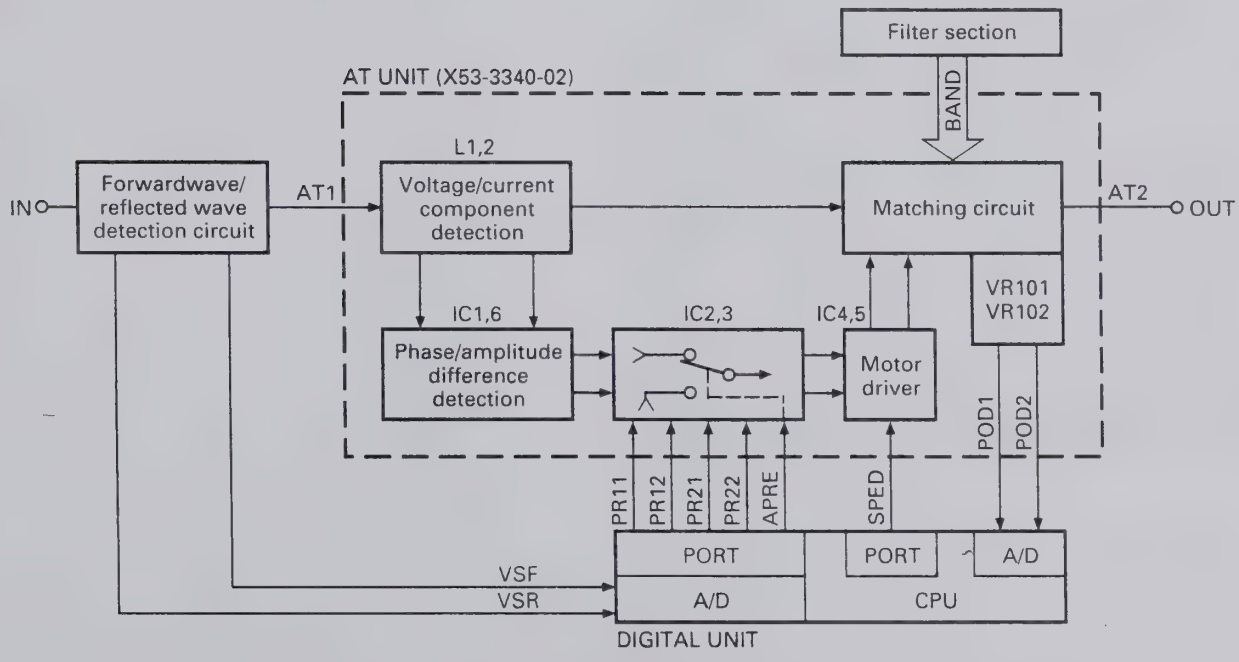

Fig. 9 AT unit block diagram

CIRCUIT DESCRIPTION

The speeds of motors M1 and M2 are determined by the duty cycle of the pulse input to control input pin 8 of IC4 and IC5, and controlled by the standing wave ratio (SWR) calculated by the control unit CPU.

Pulse signal SPED output from the control unit is passed through Q5 : DTC114EK, amplified by Q4, and input to IC4 and IC5 as a control pulse.

If the SWR is 2 or more, the duty cycle of the motor drive voltage pulse is 100%. If the SWR is 1.5 to 2, the duty cycle becomes approx. 80%. If the SWR is less than 1.5, the duty ratio becomes approx. 50% and the motor runs at low speed.

The matching circuit is T type, and the tap position from 1.8 to 30MHz is switched by seven relays K101 to K103 and K105 to K108.

Position detection volumes VR101 and VR102 are linked to the rotation axes of variable capacitors VC1 and VC2 with a gear ratio of 1 : 1. The voltages of 0 to 5V (POD1 and POD2) are generated according to the capacities of the variable capacitors. This position voltage data is sent to the microprocessor in the control unit through the analog to digital converter, and is used as the reference voltage in the feedback control system, such as for preset tuning. The same signal is also used for presetting data and end-detection.

The volume used by the TS-870S is a normal one, not an endless one. Since the rotation angle of this volume is limited, the rotation range is from the minimum capacity to the maximum capacity plus allowance.

By this control, like the preset tuning, which will be described later, POD1 and POD2 are monitored by the microprocessor. If the lower limit voltage of 0.6V or the upper limit voltage of 4.2V is reached, the microprocessor detects that the voltage is close to a limit. To return the voltage to the opposite side, APRE is made HIGH. If the variable capacitor is VC1, and the voltage is close to the lower limit in respect to POD1, the voltage near the upper limit is output. If the voltage is close to the upper limit in respect to POD1, the voltage near the lower limit is output.

The other variable capacitor VC2 outputs the voltage read by POD2 as it is. If the variable capacitor voltage exceeds the specified limit, it returns to the other limit. The other variable capacitor remains in the same position.

If the APRE is HIGH, the motor rotation direction is determined by the CPU unless auto tuning is performed.

The logic for PR11 to PR22 is the same as for IC4 and IC5 : BA6109U2. The signal output from the digital unit passes through IC2 and IC3 : TC4066BP and enters IC4 and IC5.

		PR11	PR12	PR21	PR22
Motor 1	Normal rotation	H	L	–	–
	Reverse rotation	L	H	–	–
Motor 2	Normal rotation	–	–	H	L
	Reverse rotation	–	–	L	H

■ Preset tuning

When tuning ends, the position of the variable capacitor is stored in memory by the microprocessor as preset data for that band.

When the band is changed after tuning is performed in another band, APRE goes HIGH, the motor is controlled by the microprocessor, and preset tuning is performed. During preset tuning, auto tuning or signal transmission is inhibited even if the AT TUNE switch is pressed or transmission becomes ready.

The initial preset-data when the microprocessor is reset includes standard data for a 50-ohm load on each band.

■ Preset memory band

30kHz ≤ f
1.850MHz ≤ f
2.010MHz ≤ f
3.525MHz ≤ f
3.575MHz ≤ f
3.725MHz ≤ f
4.490MHz ≤ f
7.030MHz ≤ f
7.100MHz ≤ f
7.490MHz ≤ f
10.490MHz ≤ f
14.100MHz ≤ f
14.490MHz ≤ f
20.990MHz ≤ f
21.150MHz ≤ f
21.990MHz ≤ f
25.490MHz ≤ f
29.000MHz ≤ f

CIRCUIT DESCRIPTION

Standby Control and Timing

Standby control and timing are carried out by using software for the main CPU in the control unit (X53-356X-XX). The control signals for the control unit are listed below. (See Figure 10 for each timing chart.)

SS : Standby switch input signal. Active LOW.
KEY : Keying input signal from the keyer. Active LOW.
TXC : Transmission output signal. Active HIGH. Same timing as TXB.
RXC : Reception output signal. Active HIGH. Same timing as RXB.
CKY : Output signal. Active HIGH.

With the SS line

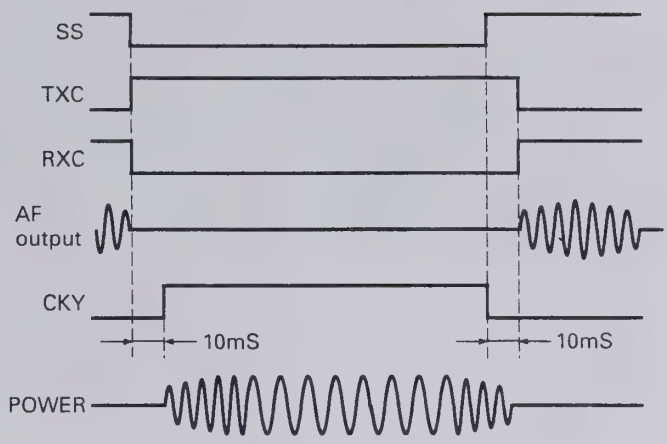

By full break-in

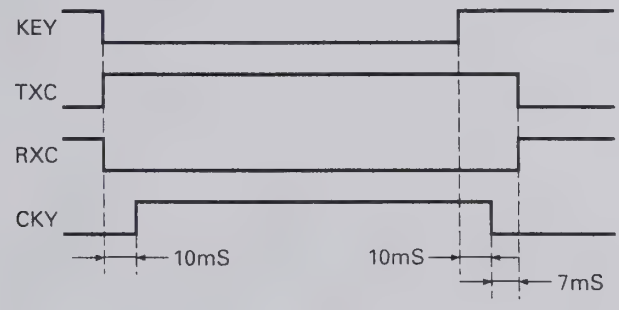

by semi break-in

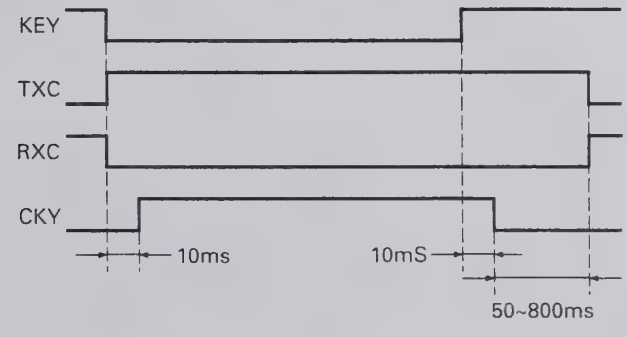

Fig. 10 Transmit/receive signal timing chart

CIRCUIT DESCRIPTION

Digital Control Unit

The TS-870S digital control circuit has a multiple chip configuration centered around the main CPU (IC6 : M37702S4BFP), and consists of a 64K ROM (IC12 : 27C512RJLVC), an 8K RAM (IC8 : LC3564QME-10), and an extended I/O (IC16, IC22, IC23 : CXD1095Q). This circuit controls about 60 different input and about 80 different output signals.

Figure 11 is a digital control block diagram.

■ Address control

The main CPU operates in the microprocessor mode in which the external ROM is used. The memory is configured as shown in the memory map, and the main CPU A12 to A15 and D0 signals and IC14, IC17, IC18, and IC19 are used to generate a chip select (CS) signal to select and access an IC. (Figure 12)

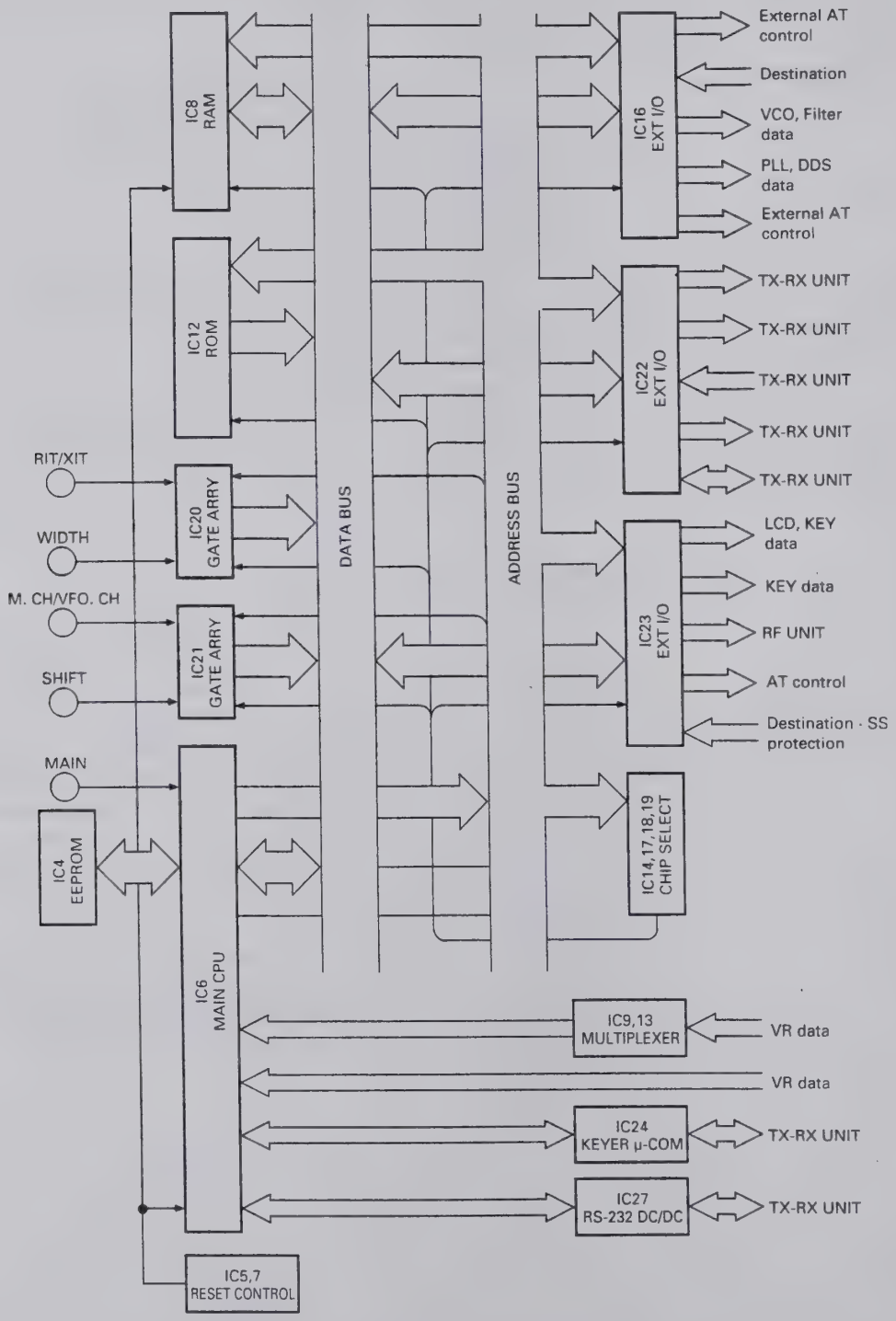

Fig. 11 Digital control block diagram

CIRCUIT DESCRIPTION

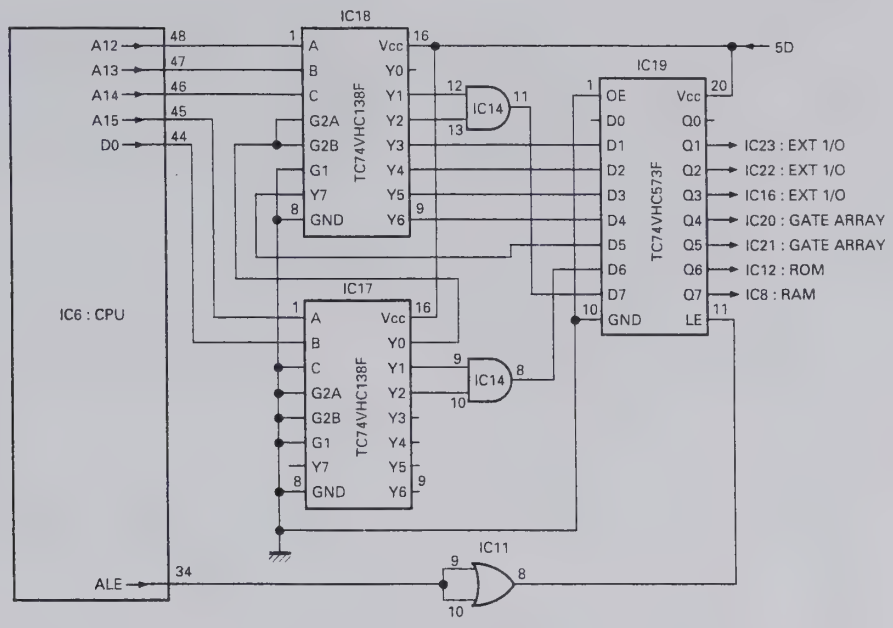

Fig. 12 Address control circuit

■ Encoder circuit

The main encoders are magnetic rotary encoders, and the click, RIT, SHIFT, and WIDTH encoders are contact-type rotary encoders.

The main encoder pulses are read directly by the main CPU.

The other encoder pulses enter the gate array (IC20 and IC21 : LZ92K371), and are read through the main CPU data bus. The gate array is selected by the latch (IC19 : TC74VHC573F) Q4 and Q5. The CK1, CK2 or CK3, CK4 encoder is selected by A0 of the gate array. Encoder data is output to D0 to D7 by making the read signal (RD) LOW when the chip select (CS) signal is LOW. IC25 and IC26 absorb encoder pulse chattering. (Figure 13)

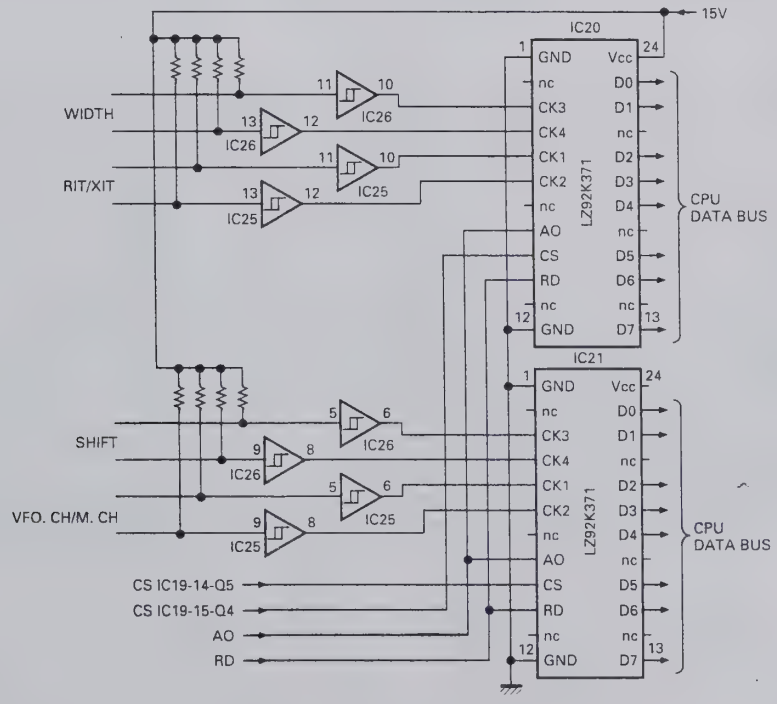

Fig. 13 Encoder circuit

CIRCUIT DESCRIPTION

■ System reset and RAM backup

The power monitor circuit (Q1, Q2, D4, D5, R6) monitors the power supply voltage. If the voltage is LOW, the circuit outputs a LOW signal to the INT1 port of the main CPU and the IRQ2 port of the microprocessor in order for the electronic keyer to stop operation. At the same time, the battery backup IC (IC5 : MB3780A) backs up the RAM with a lithium battery.

If the power supply voltage becomes normal, a HIGH signal is input to the INT1 port and the IRQ2 port, and the main CPU is initialized by the battery backup IC after the time constant set by C56 and C57. The operation resumes and power is supplied to the RAM from the outlet. (Figure 14)

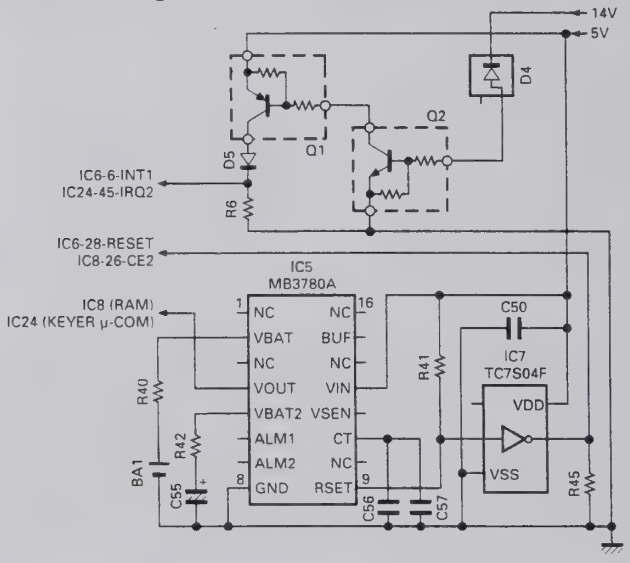

Fig. 14 System reset and RAM backup

■ Analog Signal Input

The main CPU incorporates an 8-channel analog-to-digital (A/D) converter, and in addition, has a multiplexer (IC9 and IC13 : TC4052BF) for entering 16-channel analog signals. Incoming analog signals are converted by the main CPU to digital values, which are used as digital data.

■ Display

Since the TS-870S uses a negative LCD and a fluorescent display tube.

The LCD is lighted with half a duty by the LCD driver, and the fluorescent display tube is lighted by an inverter.

The LCD driver data is set by the clock signal (UCK1), data signal (UDA1), and enable signals (ENL2, ENL3). The blanking signal (BLANK) turns the LCD driver OFF, and the dimmer signal (DIM) changes the inverter duty for dimmer.

■ Key scan

The PB0 and PB7 of IC23 and O2 to O8 of IC501 form a keyboard matrix. A key scan signal (a negative pulse) is output from the O2 to O8. One column corresponding to the PB0 and PB7 is selected, and the state of that switch is read. When the switch at the intersection of the matrix is pressed, the PBx port bit goes LOW. Thus, which switch is pressed can be detected. The key chattering is eliminated by software. (Figure 15)

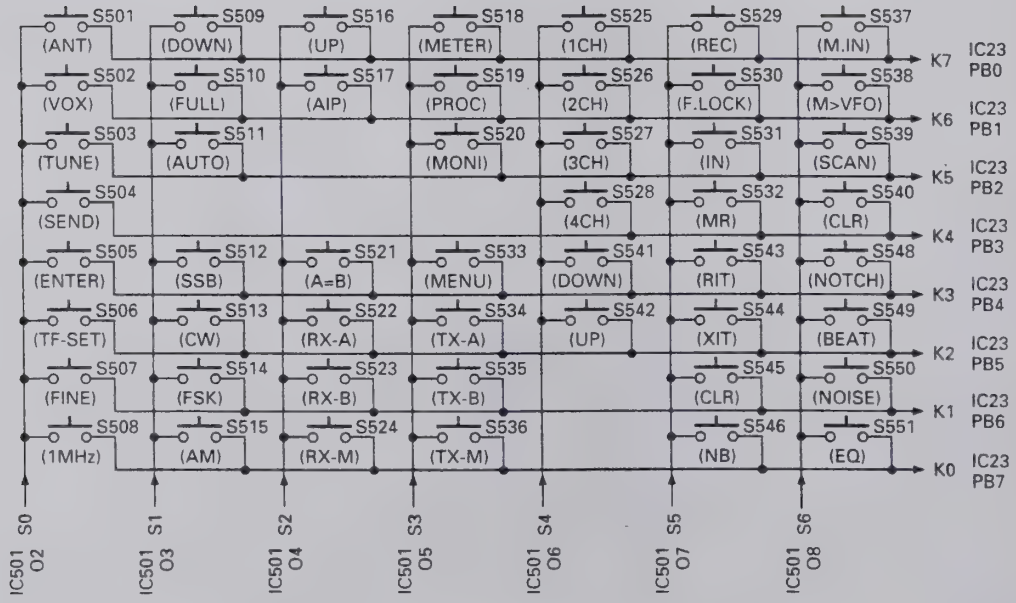

Fig. 15 Key scan circuit

CIRCUIT DESCRIPTION

■ PLL and DDS data

The TS-870S has three PLLs and three DDSs in the PLL section in the RF unit. The main CPU sends data to the PLL ICs and DDS ICs according to the displayed frequency. The PLL ICs provide unlock (UNL) signals. If one of the PLLs should unlock, the display indicates that the PLL is unlocked (Err-FE).

The TX-RX unit also has a PLL IC, to which the main CPU sends 46.32MHz data. The PLL IC also outputs an unlock signal (PLUL), and if a PLL is unlocked, an unlock message (Err-FD) is displayed.

■ AT control

The AT control inputs the variable capacitor position data (POD1, POD2, analog data input), forward wave voltage and reflected wave voltage (VSF, VSR, analog data input) for SWR calculation in the main CPU, and outputs the motor normal/reverse rotation control (PR11, PR12, PR21, PR22), motor speed control signal (SPED), and motor control switching signal (APRE).

SPED switches the motor rotation ON and OFF during AT tune and presetting by PWM with the duty cycle related to the SWR value.

APRE changes the motor normal/reverse rotation control to analog control for AT tune, and to digital control for presetting.

PR11 to PR22 control the motor normal/reverse rotations and stop when the motor normal/reverse control signal is controlled digitally. (Figure 16)

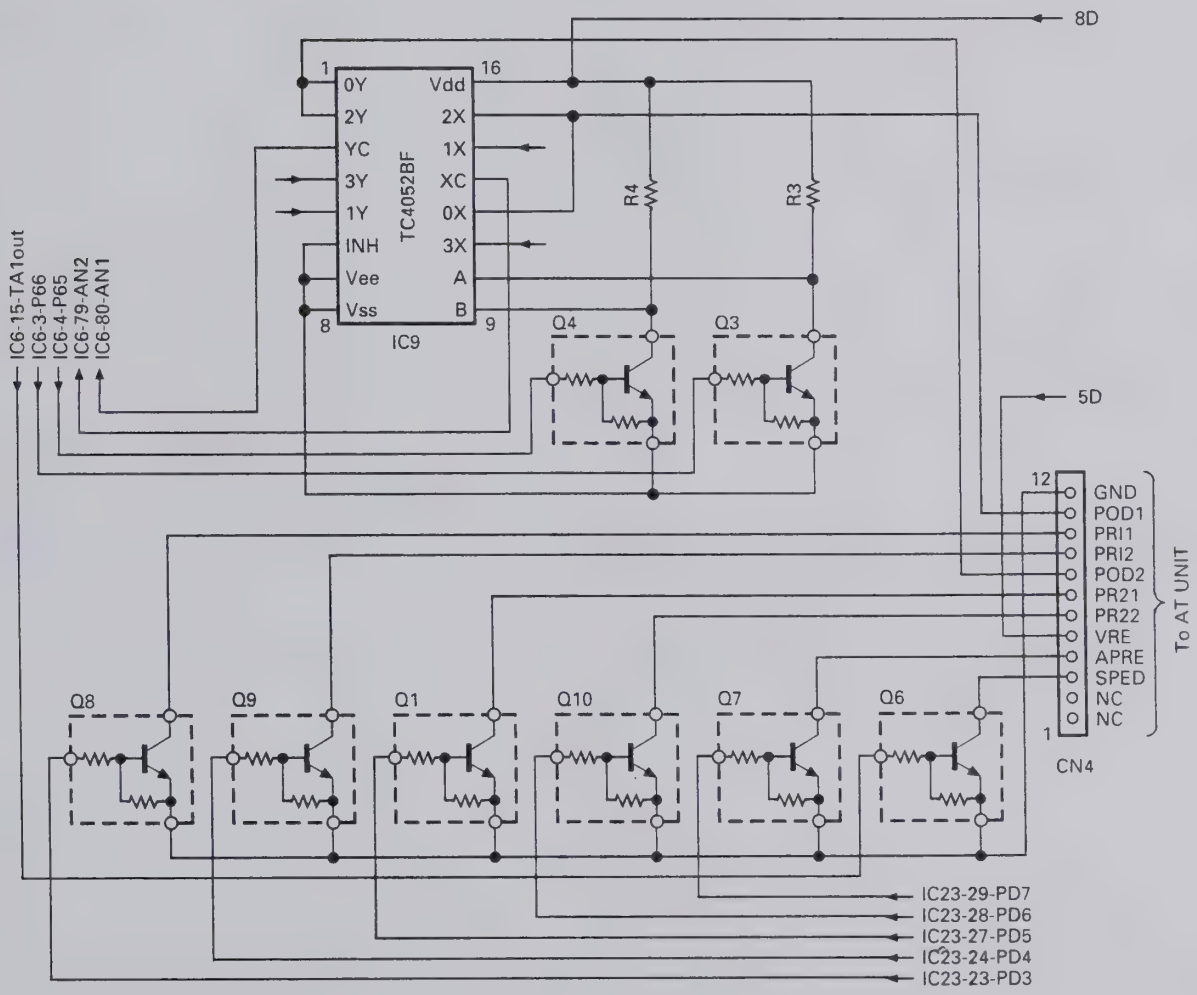

Fig. 16 AT control

CIRCUIT DESCRIPTION

■ IF filter switching

The IF filter switching signal from the control unit is controlled by PC0 to PC2 (pins 11 to 13) of IC23 and sent to the RF unit and final unit connection section.

The RF unit selects the 8.83MHz IF filter, and the final unit connection section selects the 455kHz IF filter.

The IF filter select signal is automatically interlocked with the WIDTH control.

SSB		CW		FSK		AM		FM	
WIDTH	IF FILTER	WIDTH	IF FILTER	WIDTH	IF FILTER	WIDTH	IF FILTER	WIDTH	IF FILTER
1.4k	3k	50	3k	250	3k	5.0k	6k	5.0k	15k
1.6k	↑	200	↑	500	↑	6.0k	15k	6.0k	↑
1.8k	↑	300	↑	1.0k	↑	8.0k	↑	8.0k	↑
2.0k	↑	400	↑	1.5k	↑	10.0k	↑	10.0k	↑
2.2k	↑	600	↑			12.0k	↑	12.0k	↑
2.4k	↑	1.0k	↑			14.0k	↑	14.0k	↑
2.6k	6k								
2.8k	↑								
3.0k	↑								
3.2k	↑								
3.4k	↑								
4.6k	↑								
6.0k	15k								

Table 9 IF filter selection

■ Receive band-pass filter selection

The RF BPF signal from the control unit is sent from PC6 (pin 17) of IC23 to the RF unit as serial data. The serial-to-parallel converter (TC9174F) in the RF unit converts serial data to parallel data and switches between band-pass filters.

■ Transmit low-pass filter selection

The LPF signal from the control unit is sent as serial data from PC1 (pin 12) of IC16 to the final unit filter section via the final unit connection section. The serial-to-parallel converter (TC9174F) in the final unit filter section converts serial data to parallel data and switches between low-pass filters.

■ PLL VCO data

The RF unit PLL section switches between VCOs according to the VCO band data (VB0 to VB3) output from PC4 to PC7 (pins 15 to 18) of IC16 in the control unit.

■ Electronic keyer

The TS-870S uses a dedicated IC (IC24 : 68HC05G2419553) to control the electronic keyer. The main CPU CH1 to CH4 signals switch operations to the electronic keyer IC (keyer microprocessor).

The keyer microprocessor controls the electronic keyer according to KEY SPEED VR data, DOT/DASH signal, and CH1 to CH4 signals switch operation signals from the main CPU.

The keyer microprocessor is normally at the standby mode (power save mode). Each control signal is connected to PB7 (pin 77). When this port is LOW, the standby mode is terminated.

When the standby mode is cancelled, PA7 (pin 30) outputs a HIGH signal. It is used to determine which control signal is active : CH1 to CH4, KEY SPEED VR data, or DOT/DASH signal.

PA2 (pin 25) is an input/output port that inputs KEY SPEED VR data and outputs control signal (HIGH) for VR data determination.

When a HIGH signal is output from PA2 (pin 25), C114 is charged. KEY SPEED VR data is calculated until C114 is discharged and the port goes LOW.

IRQ2 (pin 41) is an interrupt port that detects power supply voltage drop. When this port detects it, the standby mode is entered.

The keyer microprocessor outputs the key down and beep signals. The key down signal is input to IC22 (PC4 : pin 15), and the main CPU controls transmission and reception. The beep signal is input to IC29 (TC7S32F : OR gate) and output to the TX-RX unit as CKY.

The TX-RX unit determines the key jack ON/OFF and CKY level and outputs sidetone.

CIRCUIT DESCRIPTION

■ Band data

Frequency (MHz)		RF BPF (RB)		LPF	VCO				PLL
Lower limit	Upper limit	RX	TX		A	B	C	D	N
0.01	0.49	1	1	1	1	0	0	0	38
0.49	0.99	2	2						38
0.99	1.705								37
1.705	2.01	3	3						37
2.01	2.49			2					36
2.49	2.99	4	4						36
2.99	3.49								35
3.49	3.99								35
3.99	4.49	5	5						34
4.49	4.99			3					34
4.99	5.49								33
5.49	5.99								33
5.99	6.49								32
6.49	6.99								32
6.99	7.3	6	6						31
7.3	7.49	7	7						31
7.49	7.99			4	0	1	0	0	31
7.99	8.49								30
8.49	8.99								30
8.99	9.49								29
9.49	9.99								29
9.99	10.49								28
10.49	10.99	8	8	5					28
10.99	11.49								27
11.49	11.99								27
11.99	12.49								26
12.49	12.99								26
12.99	13.49								25
13.49	13.99								25
13.99	14.35	9	9						24
14.35	14.49	10	10						24
14.49	14.99			6	0	0	1	0	24
14.49	15.49								23

Frequency (MHz)		RF BPF (RB)		LPF	VCO				PLL
Lower limit	Upper limit	RX	TX		A	B	C	D	N
15.49	15.99	10	10	6	0	0	1	0	23
15.99	16.49								22
16.49	16.99								22
16.99	17.49								21
17.49	17.99								21
17.99	18.49								20
18.49	18.99								20
18.99	19.49								19
19.49	19.99								19
19.99	20.49								18
20.49	20.99								18
20.99	21.49	11	11						17
21.49	21.99	12	12		0	0	0	1	17
21.99	22.49			7					16
22.49	22.99								16
22.99	23.49								15
23.49	23.99								15
23.99	24.49								14
24.49	24.99								14
24.99	25.49								13
25.49	25.99			8					13
25.99	26.49								12
26.49	26.99								12
26.99	27.49								11
27.49	27.99								11
27.99	28.49								10
28.49	28.99								10
28.99	29.49								9
29.29	29.99								9
29.99	30								9

CIRCUIT DESCRIPTION

■ Function of IC pins

1) CPU : M37702S4BFP (Control unit IC6)

Pin No.	Port name	Pin name	I/O	Function	Active level	Initial state
1	AN0	ADR0	I	VPRC, VMON, VAGC signal		
2	P67	RES	O	Reset signal output	L	H
3, 4	P66, P65	CTB, CTA	O	Analog switch select control signal B, A	H	H
5	INT2	PSW	I	Power switch inhibit signal	H	
6	INT1	BOVR	I	14V voltage drop inhibit signal		
7	INT0		I	Unused		
8, 9	TA4IN, TA4OUT	EDP1, EDP2	I	Main encoder pulse input		
10, 11	TA3IN, TA3OUT		O	Unused		L
12, 13	TA2IN, TA2OUT		O	Unused		L
14	P53	AMUT	I	AF mute signal	L	H
15	TA1OUT	SPED	O	AT motor speed control	L	H
16	P51	LCD	O	LCD and LED serial data		H
17	P50	LCK	O	LCD and LED serial clock		H
18	P47	BLK	O	LCD all off control signal	H	L
19	P46	RBK	O	RF mute signal	L	L
20	P45	14VSW	O	Power on control signal	H	H
21	P44	ECS	O	EEPROM clock		H
22	P43	EED	I/O	EEPROM data		
23	PHI			Unused		
24	RDY		I	Bus wait cancel	H	
25	HORD		I	Hold state cancel	H	
26	BYTE		I	External data bus width 8 bit setting	H	
27	CNVss		I			
28	RESET		I	Reset signal input	L	
29, 30	Xin, Xout		I	Clock signal input		
31	E		O			
32	Vss		I			
33	HLDA					
34	ALE		O			
35	BHE					
36	R/W		O	Read/write signal		
37~44	D7~D0		I/O	Bus		
45~60	A15~A0		O	Address output		
61~64	P87~P84	PB0~PB3	O	Logic key CPU control 0~3	H	L
65	TXD0	TXD0	O	Personal computer interface serial output		H
66	RXD0	RXD0	I	Personal computer interface serial input		
67	P81	RTS0	O	Personal computer interface RTS	H	L
68	CTS0	CTS0	I	Personal computer interface CTS		
69	Vcc		I			
70	AVcc		I			
71	Vref		I			
72	AVss		I			
73	Vss		I			
74	AN7	ADR7	I	Forward wave voltage (VSF)		
75	AN6	ADR6	I	Reflected wave voltage (VSR)		
76	AN5	ADR5	I	ALC meter analog input		
77	AN4		I	Unused		
78	AN3	ADR3	I	VPWR, VMIC, VDLY, VCAR signal		
79	AN2	ADR2	I	POD2, VRF, POD2, VAF signal		
80	AN1	ADR1	I	POD1, VNB, POD1, VSQL signal		

CIRCUIT DESCRIPTION

2) CPU : 68HC05G2419553 (Control unit IC24)

Pin No.	Port name	Pin name	I/O	Function	Active level	Initial state
1	VDD		I			
2~5	PB3~PB0		I	CH4 to CH1 switch input signal from IC6		
6~13	AD0~AD7		I	Unused		
14	VrefH			Unconnected		
15	VrefL		I			
16	Vss		I			
17	VDD		I			
18, 19	XOSC1, XOSC2		I	Unconnected		
20	RES		I	Reset signal input		
21, 22	OSC1, OSC2		I	Clock input		
23	PA0	DOT	I	DOT input		
24	PA1	DASH	I	Dash input		
25	PA2	SPEED VR	I/O	KEY VR data determine port		
26~29	PA3~PA6		I	Unused		
30	PA7	int contro	O	Inhibit determine control signal	H	
31~33	PG0~PG2		I	Unused		
34	TCMP		I	Unconnected		
35	PG4		I	Unused		
36	PG5	EBSY	I	Unused		
37	PG6	MBSY	I	Unused		
38	PG7		I	Unused		
39~44	PC0~PC5		I	Unused		
45	IRQ2	sleep	I	14V voltage drop determine inhibit port		
46	PC7		I	Unused		
47	VDD		I			
48	PD0		I	Unused		
49	PD1	mbusy	O	Message busy signal		
50	PD2		I	Unused		
51	PD3	pbc	O	Beep output signal		
52	PD4		I	Unused		
53	PD5	KEY	O	Key signal output		
54	PD6		I	Unused		
55	PD7		I	Unconnected		
56~59	PE0~PE3		I	Unused		
60	Vss		I			
61~64	PE4~PE7		I	Unused		
65~72	PH0~PH7		I	Unused		
73~76	PJ0~PJ3		I	Unused		
77	PB7	WAKE UP	I	Wake up inhibit		
78~80	PB6~PB4		I	Unused		

CIRCUIT DESCRIPTION

3) Extended I/O : CXD1095Q (Control unit IC16)

Pin No.	Port name	Pin name	I/O	Function	Active level	Initial state
1, 2	NC					
3~7	PB1~PB5	SHIMO1~SHIMO5	I	Destination determine port	H	
8	PB6	50W	I	50W switch signal	L	
9	PB7	UNL	I	Unlock signal	H	
10	Vss		I			
11	PC0	ENF1	O	Serial/parallel convert enable	H	L
12	PC1	UDA23	O	Serial/parallel convert data		L
13	PC2	UCK23	O	Serial/parallel convert clock		L
14	PC3	NFMT	O	Control signal except FM transmit mode	L	H
15, 16	PC4, PC5	VB3, VB2	O	VCO band data	H	L
17	PC6	VB1	O	VCO band data	H	H
18	PC7	VB0	O	VCO band data	H	L
19	NC					
20	PD0	PLE2	O	VCO2 enable	H	L
21	PD1	PLE1	O	VCO1 enable	H	L
22	PD2	PCK	O	PLL clock		L
23	PD3	PDA	O	PLL data		L
24	PD4		O	Unused		L
25	Vss		I			
26	VDD		I			
27	PD5	DLE3	O	DDS3 enable	H	L
28	PD^	DLE2	O	DDS2 enable	H	L
29	PD7	DLE1	O	DDS1 enable	H	L
30~32	D0~D2		I/O	Bus		
33, 34	NC					
35~39	D3~D7		I/O	Bus		
40	CLR		I	Port E output register clear	L	
41	ODEN		I	Output disable	L	
42	Vss		I			
43	WR		I	Write signal	L	
44	RD		I	Read signal	L	
45	CS		I	Chip select signal	L	
46~48	A0~A2		I	Address signal		
49	PE0	P TTI	I	External AT TT input	H	
50	PE1	P TSI	I	External AT TS input	H	
51	NC					
52	PE2	MBSY	I	Electronic keyer busy signal		
53	PE3		I	Unused		
54	PA0	P TTO	O	External AT TT output	H	L
55	PA1	P TSO	O	External AT TS output	H	L
56	PA2		O	Unused		L
57	Vss		I			
58	VDD		I			
59~62	PA3~PA6		O	Unused		L
63	PA7	LOGKEY	O	Electronic keyer reset	H	L
64	PB0	SHIMO0	I	Destination determine port	H	

CIRCUIT DESCRIPTION

4) Extended I/O : CXD1095Q (Control unit IC22)

Pin No.	Port name	Pin name	I/O	Function	Active level	Initial state
1, 2	NC					
3~9	PB1~PB7		I/O	DSP bus		
10	Vss		I			
11	PC0		I	Unused		
12	PC1	KEYS	I	Electronic keyer connecting determine signal	L	
13	PC2	MD	I	Microphone UP switch signal	L	
14	PC3	MU	I	Microphone DOWN switch signal	L	
15	PC4	KEYI	I	Key input signal	L	
16	PC5	PLUL	I	PLL unlock in DSP	L	
17	PC6	EOM	I	DRU-3 EOM signal	H	
18	PC7	VBSY	I	VS-2 busy signal	L	
19	NC					
20	PD0	DRST	O	DSP reset signal Normally "H"	L	H
21	PD1	VCEN	O	Electronic volume DAC enable	L	H
22	PD2	UCK22	O	Serial/parallel convert clock signal		L
23	PD3	UDA22	O	Serial/parallel convert data signal		L
24	PD4	DREN	O	DRU-3 enable signal	L	H
25	Vss		I			
26	VDD		I			
27	PD5	PLEN	O	PLL enable in DSP	H	L
28	PD6	STR	O	VS-2 start signal	H	L
29	PD7		O	Unused		L
30~32	D0~D2		I/O	Bus		
33, 34	NC					
35~39	D3~D7		I/O	Bus		
40	CLR		I	Port E output register clear	L	
41	ODEN		I	Output disable	L	
42	Vss		I			
43	WR		I	Write signal	L	
44	RD		I	Read signal	L	
45	CS		I	Chip select signal	L	
46~48	A0~A2		I	Address signal		
49	PE0	HENA	O	DSP enable A	L	H
50	PE1	HENB	O	DSP enable B	L	H
51	NC					
52	PE2	HRW	O	DSP R/W signal		H
53	PE3		O	Unused		L
54~56	PA0~PA2		O	DSP address signal		L
57	Vss		I			
58	VDD		I			
59	PA3		O	Unused		L
60	PA4	P BEEP	O	Beep output signal	H	L
61	PA5	P CKY	O	Transmit output control signal	H	L
62	PA6	P RXC	O	Receive control signal	H	H
63	PA7	P TXC	O	Transmit control signal	H	L
64	PB0		I/O	DSP bus		

CIRCUIT DESCRIPTION

5) Extended I/O : CXD1095Q (Control unit IC23)

Pin No.	Port name	Pin name	I/O	Function	Active level	Initial state
1, 2	NC					
3~9	PB1~PB7	P K1~P K7	I	Key matrix input	L	
10	Vss		I			
11	PC0	6KFIL	O	Analog filter select signal	H	L
12	PC1	3KFIL	O	Analog filter select signal	H	H
13	PC2	15KFIL	O	analog filter select signal	H	L
14~16	PC3~PC5	P ENR3~P ENR1	O	RF serial/parallel convert enable	H	L
17	PC6	P UDA21	O	Serial/parallel convert data		L
18	PC7	P UCK21	O	Serial/parallel convert clock		L
19	NC					
20~22	PD0~PD2		O	Unused		L
23	PD3	P APRE	O	AT motor control signal		L
24	PD4	P PR22	O	AT motor 2 control signal		L
25	Vss		I			
26	VDD		I			
27	PD5	P PR21	O	AT motor 2 control signal		L
28	PD6	P PR12	O	AT motor 1 control signal		L
29	PD7	P PR11	O	AT motor 1 control signal		L
30~32	D0~D2		I/O	Bus		
33, 34	NC					
35~39	D3~D7		I/O	Bus		
40	CLR		I	Port E output register clear	L	
41	ODEN		I	Output disable	L	
42	Vss		I			
43	WR		I	Write signal	L	
44	RD		I	Read signal	L	
45	CS		I	Chip select signal	L	
46~48	A0~A2		I	Address signal		
49	PE0	P THP	I	Thermal protection signal	H	
50	PE1	P SS	I	Microphone PTT switch signal	L	
51	NC					
52	PE2		I			
53	PE3		O	Unused		L
54	PA0	P DIM	O	Dimmer control signal	H	H
55, 56	PA1, PA2	P ENL3, P ENL2	O	LCD driver enable signal	H	L
57	Vss		I			
58	VDD		I			
59	PA3	P LATC	O	AT LED	H	L
60, 61	PA4, PA5	P ENL1, P ENL4	O	Switch serial/parallel convert enable	H	L
62, 63	PA6, PA7		O	Unused		L
64	PB0	P K0	I	Key matrix input	L	

CIRCUIT DESCRIPTION

TX-RX Unit (DSP Operation)

■ Outline

The TS-870S uses the DSP to carry out various processing as compared with the conventional models. They include the following:

- Modulation and demodulation
- Filter processing
- AGC processing (S-meter data output)
- Mic amplifier AGC processing
- VOX processing
- Voice equalizing processing
- Noise processing (noise reduction, beat cancel, automatic notch)
- Speech processing (COMP meter data output)
- Squelch processing
- Sidetone and beep generation

The commands and data for the microprocessor are listed below (see page 42).

The TX-RX unit circuits are divided into the analog section that processes analog signals and digital section that processes digital data. The interface between the analog and digital sections is the analog-to-digital converter (IC25 : AK5340-VS) and digital to analog converter (IC16 and IC27 : AK4318-VS, IC34 : PCM69AU).

The unit has another digital to analog converter (IC26 : M62363FP) for VCA (electronic volume : M51131L) control. The volume is controlled directly by the microprocessor in the control unit (the volume is not controlled by the DSP).

■ Digital section

The digital section is explained below. Figure 17 is a digital section block diagram.

The digital section consists of two DSPs (IC1 and IC2 : DSP56002FC40), RAM (IC7 : MCM56824AFN2*), three ROMs (IC4, IC5, IC6 : 27C256PCJJ**), and gate array (IC3 : MBCG24173-6173) and PLD (IC9 : 7032LC44JLQ*). The TX-RX unit has a PLL, but it is included in the digital section for convenience. * indicates the version number.

The PLL in the TX-RX unit is controlled directly by the microprocessor in the control unit, and clocks of a fixed frequency of 46.32MHz are generated. This circuit forms a VCO consisting of Q8 : 2SK210(GR), Q9 and Q10 : 2SC2714(Y). Q8 is an oscillator and Q9 and Q10 are buffer amplifiers. Q5, Q6, and Q7 comprise an active low-pass filter. This low-pass filter converts the output from PLL IC IC15 : MB86001PF to DC voltage and sends it to the VCO.

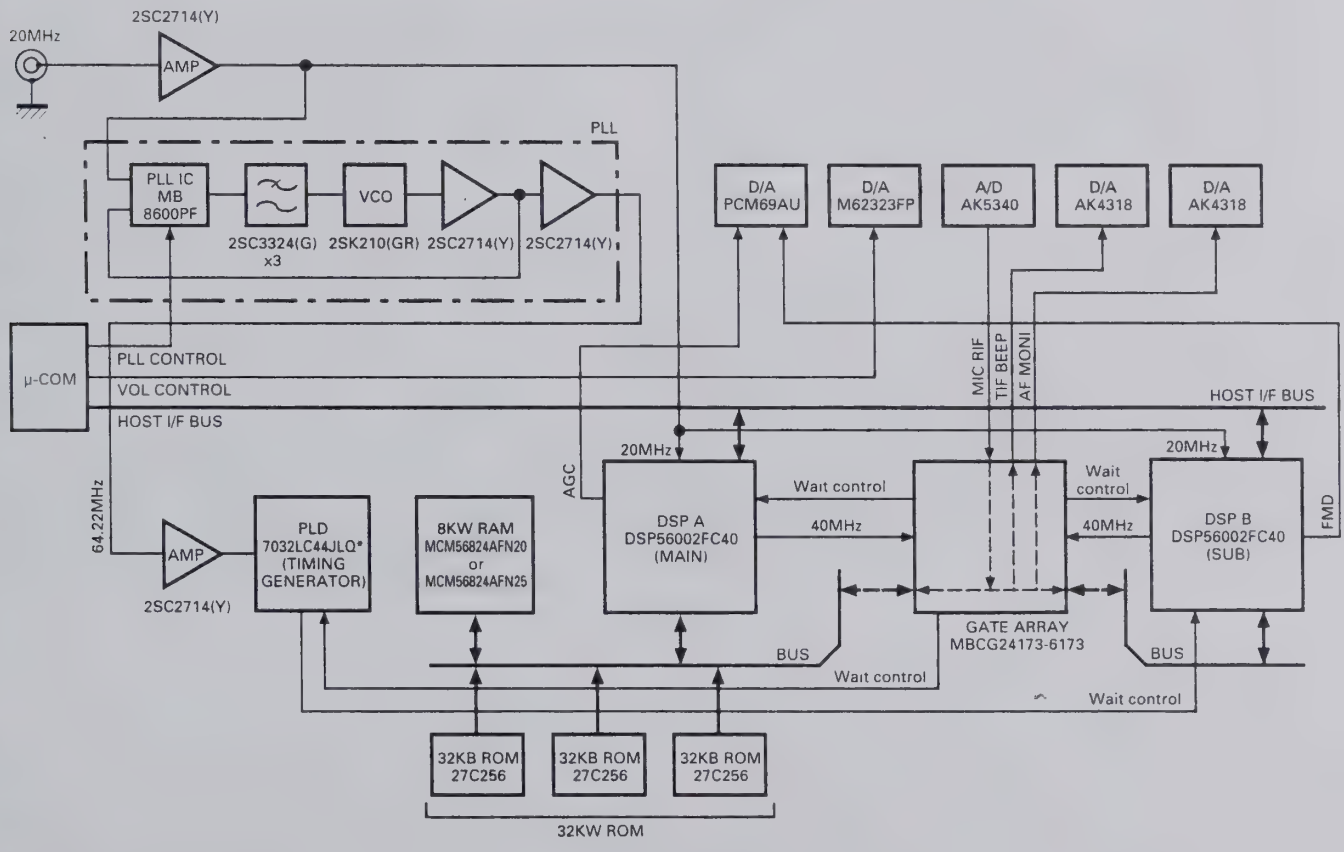

Fig. 17 Digital section block diagram

CIRCUIT DESCRIPTION

Figure 18 is a block diagram of the PLD (Programmable Logic Device). The clock with a sampling frequency fs (45.234375kHz) is generated from the 46.32MHz clock produced by the PLL in the TX-RX unit by the clock divider in the PLD. This clock is used for data transmission and reception between the analog-to-digital and digital to analog converters and gate array and data transmission and reception between the gate array, DSP, and the analog to digital and digital to analog converters. The PLD forms part of the bus control circuit for sharing the RAM and ROM with two DSPs and the circuit that accesses the ROM.

The gate array is used as the interface between the analog to digital and digital to analog converters and the DSP. Data is received from the analog to digital converter, or transmitted to the digital to analog converter, and each DSP is interrupted in the 1/fs sampling intervals. The gate array interfaces two DSPs for communication, and the two other DSPs control the bus for sharing the RAM and ROM.

The DSP has a 24 bit fixed-decimal DSP. It operates with the 40MHz clock, but the external 20MHz clock is given to the DSP. The DSP operates the 40MHz clock generated in the PLL in the IC. The clock is programmed to be output to pin 123 (CKOUT) of the DSP. Transfer of commands with the microprocessor is carried out through the host interface of the DSP.

The ROM and RAM are shared by two DSPs. When one of the DSPs is being accessed, the other DSP waits. It is carried out by the gate array and PLD. Three 8 bit ROMs are used to implement 24 bits.

The analog to digital converter (IC25 : AK5340-VS) is an 18 bit Δ-Σ type ADC for audio equipment. There are two channels, R and L. The R channel is used for the receive signal and the L channel is used for the microphone input signal. The digital to analog converter (IC16 and IC27 : AK4318-VS) is a 18 bit Δ-Σ type DAC for audio equipment. The digital to analog converter has two channels like the analog to digital converter : IC16 uses the R channel for the beep signal and the L channel for the transmit signal, and IC27 uses the R channel for the monitor signal and the L channel for the decode signal. Another digital to analog converter (IC34 : PCM69AU) is an 18 bit DAC for audio equipment, and uses the Rch for AGC and the L channel for audio signals in FM.

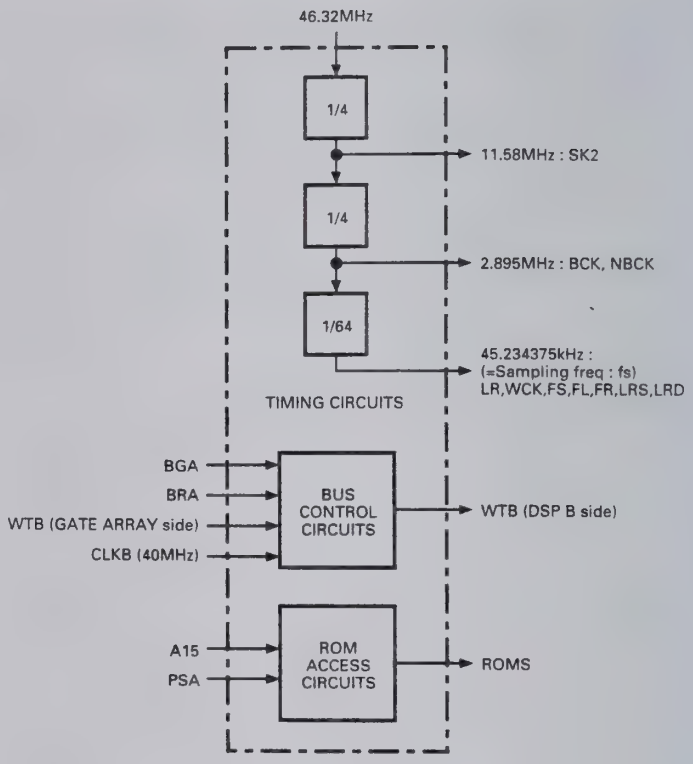

Fig. 18 PLD block diagram

■ Flow of transmit/receive signals

Flow of transmit/receive signals is explained below, together with the analog and digital sections. Flow of receive signals is explained first. See Figure 19.

The receive signal input from pin 3 (RIF) of CN1 is amplified by IC43 : NJM5532M. If a HIGH signal is input to RIF, its amplitude is limited to prevent any signal that exceeds the input range to the analog to digital converter (IC25 : AK5340-VS). The signal is passed through the band-pass filter and buffer amplifier, and its frequency is converted by the mixer (IC18 : MC74HC4053F). The frequency of the receive signal is about 1/4 of sampling frequency fs. The fs/4 frequency is the most stable frequency for digital signal processing. The receive signal of the fs/4 frequency is passed through the buffer amplifier, amplified by amplifier IC21 : NJM4560M, and converted to digital data by the analog to digital converter (IC25).

CIRCUIT DESCRIPTION

This data is read into the gate array (IC3 : MBCG 241873-6173) in sampling intervals 1/fs. The data read into the gate array is fed to the DSP in 1/fs for processing. DSP A (IC1 : DSP56002FC40) carries out auto notching, demodulation, noise processing, and squelch processing, and DSP B carries out AGC and filter processing.

AGC data, one of the DSP B operation results, is sent to the digital to analog converter (IC34 : PCM69AU) from pin 33 of DSP B (IC2: DSP56002 FC40) in 1/fs intervals. AGC data is converted to an analog current by IC34, and converted to an analog voltage by the I-V converter IC35 : AD822AR, and is output to the RF unit as the AGC voltage. The AGC voltage is reversed by the reversing amplifier IC35 : AD822AR, and the S-meter voltage used for packet communication is generated and output from the SMET terminal of ACC2 (J5).

The digital data demodulated by two DSPs is sent to the gate array in 1/fs intervals. The data is sent to the digital to analog converter (IC27 : AK4318-VS) from pin 68 of the gate array in 1/fs intervals and converted to an analog signal. The demodulate signal converted to an analog signal is passed through the third low-pass filter IC28 : NJM2100M. This low-pass filter eliminates the alias components. The demodulate signal then enters the VCA (IC29 : M51131L). The VCA attenuates and outputs the demodulate signal according to the voltage given to pin 8 of IC29. The voltage at pin 8 is the voltage corresponding to the rotational angle of the AF VOL, and is controlled by the microprocessor in the control unit. The demodulate signal is passed through the VCA, amplified by the AF amplifier (IC33 : LA4422), and output to the speaker and headphone.

Demodulation data used for packet communication is passed through low-pass filter IC28 : NJM2100M, then attenuated by the VCA IC31 : M51131L. The attenuation amount is determined by the value set on the menu. The signal is passed through the VCA and ACC2 (J5) through the buffer amplifier Q17 : 2SC 2412K(S), and output to the TNC.

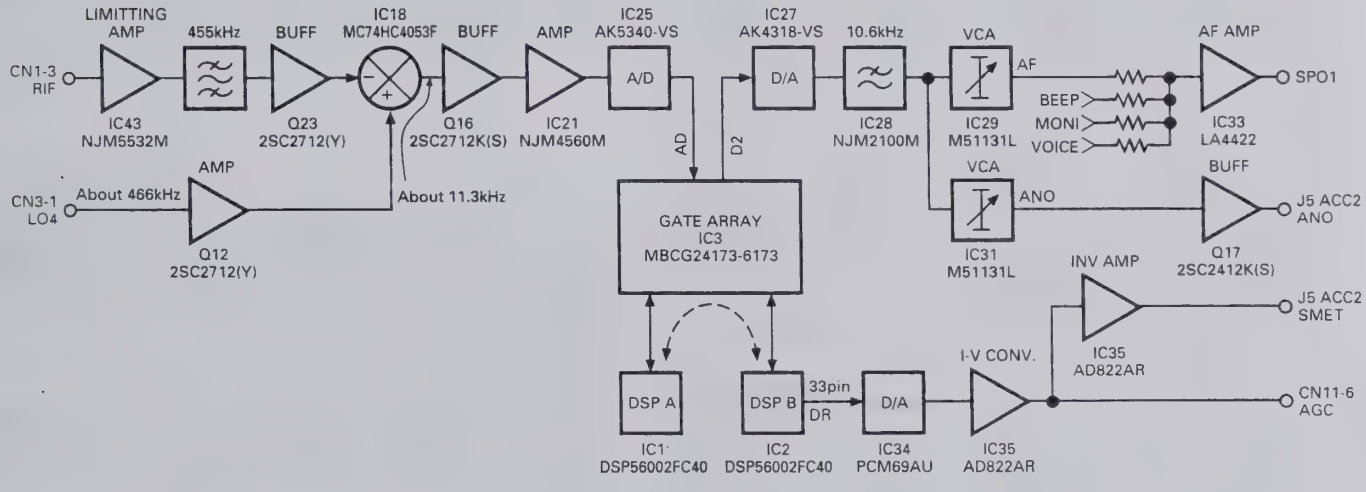

Fig. 19 Flow of receive signal

CIRCUIT DESCRIPTION

Then, flow of transmit signals is explained below. See Figure 20. If the mode is SSB, FM, or AM, the signal from the microphone is input. The signal enters the TX-RX unit through CN4. The signal is amplified by amplifier IC22 : AD822AR, and goes to the multiplexer (IC23 : MC74HC4052F). The multiplexer is used to switch between the microphone signal, the play signal from the DRU-3 (option), and packet signal. The signal passing through the multiplexer is amplified by amplifier IC24 : NJM2100M, and converted to digital data by the analog to digital converter (IC25 : AK5340-VS). The data is read into the two DSPs in the same way as for the receive signal. In transmit mode, DSP A carries out modulation, speech processing, and carrier signal generation in CW, FSK, and FM modes, while DSP B carries out VOX processing, voice equalizing processing, preemphasis processing (in FM mode), and microphone amplifier AGC processing.

The DSP does not perform modulation in FM mode. The DSP sends a 455kHz carrier signal from pin 1 (TIF) of CN1, adds subtone to the carrier signal, preemphasizes sounds, and limits the amplitude. Preemphasized audio data is sent from pin 33 of DSP A (IC1 : DSP56002FC40) to the digital-to-analog converter (IC34 : PCM69AU) in 1/fs intervals, and converted to an analog current. The analog current is converted to the audio signal of the analog voltage by the I-V converter IC36 : NJM4560M. IC36 also serves as the third low-pass filter that eliminates the alias components of the audio signal. The analog audio data signal is output from pin 3 (FMD) of CN3 to the PLL section.

The data modulated by the two DSPs (including FM carrier data) is sent to the gate array in the process as the demodulated signal. The signal is sent from pin 60 of the gate array to the digital to analog converter (IC16 : AK4318-VS) in 1/fs intervals, and converted to an analog signal. The frequency of this signal is fs/4. The analog modulated signal is passed through the third low-pass filter IC17 : NJM2100M to eliminate alias components. The signal is converted to the 455kHz IF signal by the mixer (IC18 : MC74HC4053F) and two ceramic filters (CF2 and CF3), and output from pin 1 (TIF) of CN1.

Monitor data, one of the DSP operation results, is sent to the gate array in the same process as the demodulate signal. Like the demodulate signal, the signal is sent from pin 68 of the gate array to the digital to analog converter (IC27 : AK4318-VS), and converted to an analog signal. The analog sidetone signal is passed through the third low-pass filter IC30 : NJM2100M and attenuated by VCA (IC31 : M51131L). The attenuation is determined by the rotational angle of MONI VOL. The flow of the signal after passing through the VCA is the same as for the demodulate signal.

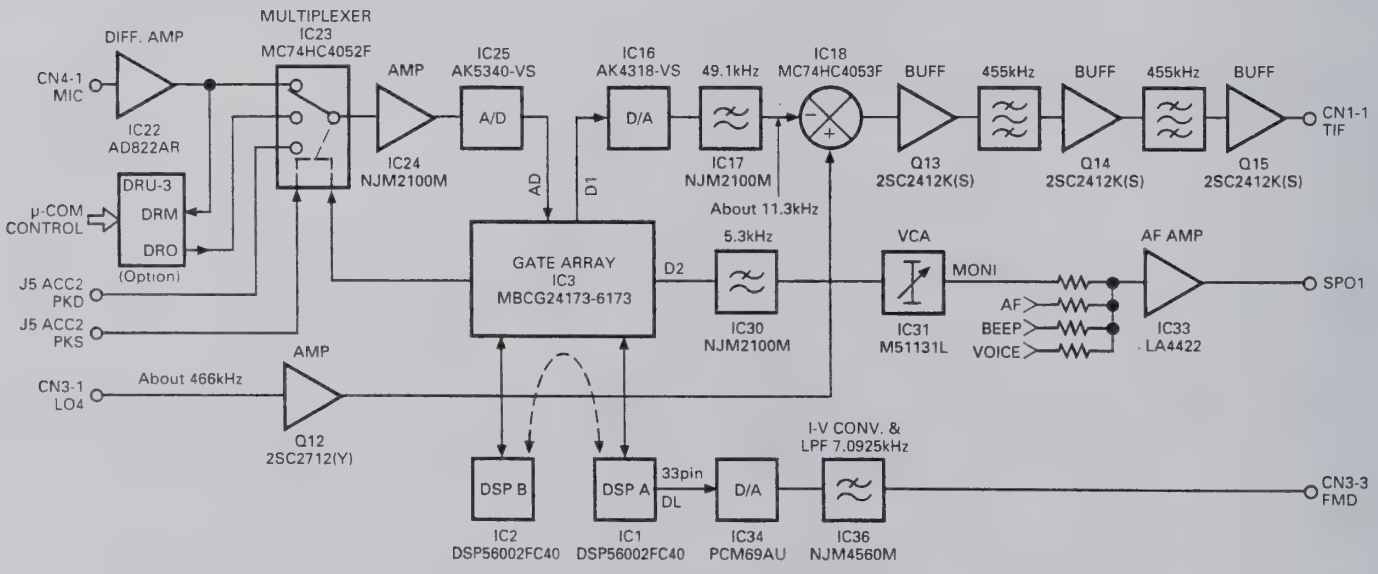

Fig. 20 Flow of transmit signal

CIRCUIT DESCRIPTION

■ Sidetone signal flow

When the electronic keyer is pressed, the sidetone is output. The sidetone is processed by DSP A. Sidetone data, a DSP A operation result, is output to the speaker or headphone in the same process as the monitor data. See Figure 21.

■ FSK tone signal flow

The flow of the FSK tone signal is the same as that of the sidetone. See Figure 21.

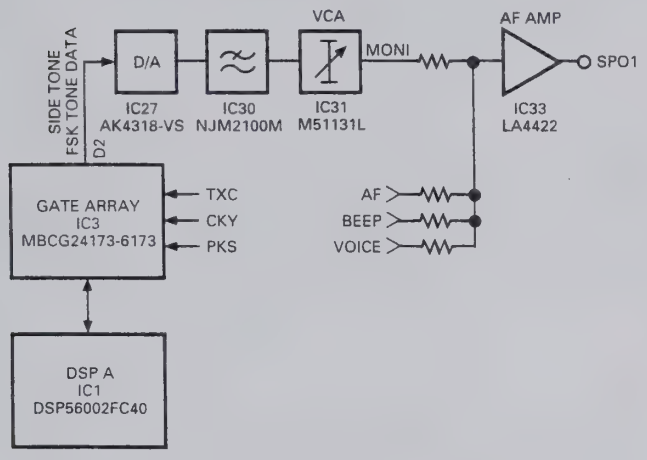

Fig. 21 Sidetone and FSK tone signal flow

■ Beep signal flow

When pin 6 (BEEP) of CN7 goes HIGH, DSP A sends beep data to the gate array in the same process as the demodulate signal. Like modulation data, the signal is sent from pin 60 of the gate array to the digital to analog converter (IC16 : AK4318-VS) in 1/fs intervals, and converted to an analog signal. The analog beep signal is passed through the primary low-pass filter IC19 : NJM4560M, and attenuated by VCA (IC29 : M51131L). The attenuation is determined by the value set on the menu. The flow of the signal after passing through the VCA is the same as for the demodulate signal.

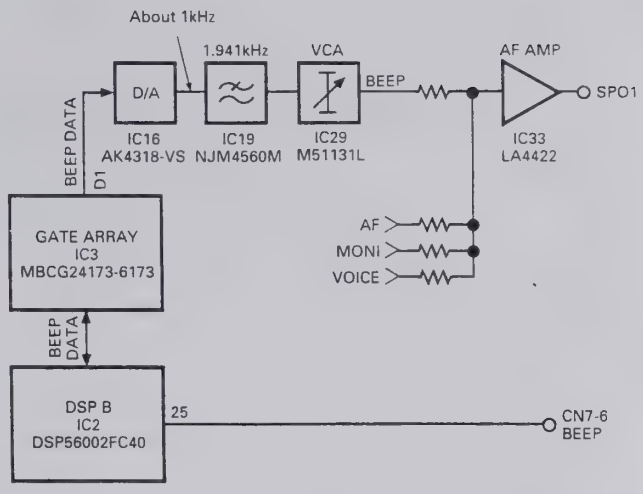

Fig. 22 Beep signal flow

■ DRU-3 recording and playback

The DRU-3 is controlled by the microprocessor in the control unit. During the DRU-3 recording, the MIC signal amplified by the differential amplifier (IC22 : AD822AR) is input to the DRU-3, and recorded. During DRU-3 playback, the playback signal is input to the analog-to-digital converter by switching the multiplexer (IC23 : MC74HC4052F). When the DSP receives a command "VOX ON and DRU playback" from the microcomputer, pin 38 of DSP B (IC2 : DSP56002FC40) goes HIGH and the SS line goes LOW. When the SS line goes LOW, the microprocessor sets the transceiver to transmit mode. This operation does not occur at the playback sound level of the DRU-3. Even if no sound is recorded, the transceiver enters the transmit mode when a DRU playback command arrives while VOX is ON. See Figure 20.

■ VS-2 audio signal flow

The audio signal output from the VS-2 is not processed by the DSP. The signal is amplified by the AF amplifier, and output to the speaker or headphone. The VS-2 is controlled by the microprocessor. See Figure 23.

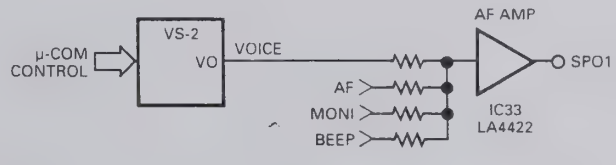

Fig. 23 VS-2 audio signal flow

CIRCUIT DESCRIPTION

■ Commands and data transferred to or from the microprocessor

To understand the DSP processing, the commands sent from the microcomputer to the DSP, and data sent from the DSP to the microcomputer are described below.

For details of error status, see the error list (Table 10).

1) Microprocessor → DSP

- Transmit mode
- Transmit filter
- CW rise (fall) time
- FSK shift width
- Squelch level
- Applicable filter follow speed
- SPAC interrelation time
- Check mode operation setting
- VOX delay time
- AGC release time
- TX AGC release time
- AGC correction
- TX equalizing
- FM modulation
- Processor compression level (LOW)
- Processor compression level (MID)
- Processor compression level (HIGH)
- RX AF AGC gain (AM/FM)
- RX AF AGC gain release time (AM/FM)
- TX AGC gain (packet input)
- Receive mode
- Receive filter
- CW pitch frequency
- FM subtone frequency
- Noise/interference elimination mode setting
- Auto notch follow speed
- Operation flag 1
- VOX gain
- RF gain (AGC)
- TX AGC gain
- AM modulation
- Carrier level
- Operation flag 2

2) DSP → Microprocessor

- S-meter data
- Compression level data
- Squelch status
- Microphone level data
- Error status
- Check mode status

Error No.	Error description
00	TX-RX unit is not connected.
01	Main DSP stack error
02	Main DSP trace error
03	Main DSP software interrupt
04	Main DSP SSI reception
05	Main DSP SSI exceptional reception
06	Main DSP SCI reception
07	Main DSP SCI exceptional reception
08	Main DSP SCI transmission
09	Main DSP SCI line idle detection
0A	Main DSP NMI
0B	Main DSP invalid command detection
0C	Command cannot be transferred from the main DSP to the sub DSP.
10	RAM check error 1
11	RAM check error 2
12	Gate array check error
21	Sub DSP stack error
22	Sub DSP trace error
23	Sub DSP software interrupt
24	Sub DSP SSI reception
25	Sub DSP SSI exceptional reception
26	Sub DSP SCI reception
27	Sub DSP SCI exceptional reception
28	Sub DSP SCI transmission
29	Sub DSP SCI line idle detection
2A	Sub DSP NMI
2B	Reserved
2C	Reserved
2D	Sub DSP invalid command detection
2E	Reserved
F0	Main DSP timeover error
F1	Sub DSP timeover error
FD	PLL unlock (TX-RX unit)
FE	PLL unlock (RF unit PLL section)
FF	Temperature protection error

Table 10 Error list

CIRCUIT DESCRIPTION

■ New function circuit

The TS-870S noise processing, auto notch, line enhancer, SPAC, and beat cancel functions are characteristics of the DSP digital signal processing. These functions and other features are described below.

1) Auto notch

The auto notch corresponds to the IF filter used in the previous models. It is an adaptive filter, and emphasizes weak signals by tracking interfering signals automatically in the AGC loop (the reception gain increases). The notch filter has very good damping and frequency characteristics in the receiving bandwidth.

2) Beat cancel

The "beat cancel" corresponds to the AF filter used in the previous models. It also is an adaptive filter, and finds and removes beat components from the received signal. Unlike the notch filter, this filter removes multiple beats, but it does not emphasize weak signals even if the beat is canceled.

3) Noise reduction

The TS-870S uses a line enhancer or SPAC to reduce noise. One of these two functions should be assigned to the N.R. key on the front panel.

The line enhancer is an adaptive filter which does not attenuate the target signal, but attenuates only noise. If the conditions are not very bad, the S/N ratio can be improved greatly.

. Select SPAC to improve the S/N ratio effectively. SPAC stands for "Speech Processing System by use of Auto Correlation function.". It takes the periodical signal (target reception signal) and suppresses noise using the Auto Correlation function. Since SPAC takes reception signals with a certain time width, the signals become discontinuous and cause noise.

Since the auto notch, beat cancel, and line enhancer are adaptive filters, their characteristics change according to the input signal. If the automatic tracking is set to OFF on the menu when the filter effect is good under good signal conditions, the effect does not change even if the conditions turn bad.

4) VOX

DSP processes the correlation between the received signal and signal from the microphone, and carries out the conventional anti-VOX processing. Therefore, TS-870S does not have anti-VOX.

5) SSB modulation/demodulation

TS-870S uses the PSN modulation/demodulation used for TS-950 and subsequent models. With the increase in the DSP operation precision, the side-band suppression has been improved in a very wide bandwidth from 25Hz to 6kHz (80dB or more for modulation and 90dB for demodulation). The PSN method does not eliminate all group-delay distortion because the Hilbert converter uses an IIR filter. The TS-870S uses a linear phase shifter with a Hilbert converter containing an FIR filter. As the FIR filter can keep group delay constant, it does not cause group-delay distortion. However, as the group-delay itself increases, if the linear phase shifter is set to ON via the menu, a signal is transmitted several ms after a voice enters the microphone.

■ Analog section and other circuits

The analog section and other circuits were described in the flow of transmission and reception signals. This section describes the circuits that were not explained in the flow of transmission and reception signals.

1) Reference voltage circuit

Since TS-870S does not have a negative power supply, a 2.5V reference voltage, which is half the power supply voltage, is supplied to the OP amplifier to process analog signals linearly. Fig. 24 shows this circuit. 2.5V are produced by dividing the power supply voltage by R129 and R132. This voltage is provided to the circuitry through buffer amplifier IC19 or IC20.

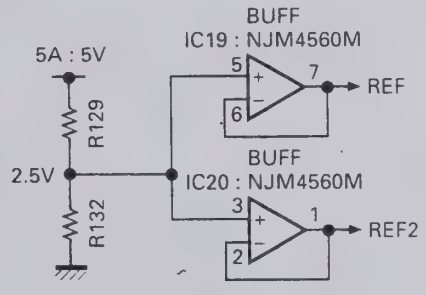

Fig. 24 Reference voltage circuit

CIRCUIT DESCRIPTION

2) Pop mute circuit

The mute circuit shown in Fig. 25 reduces the pop sound when the power is switched ON and OFF. If CN7 pin 16 AMUT is LOW, the mute circuit consisting of IC44 : TC7S04F and Q22 : DTC124EK mutes the AF amplifier (IC33 : LA4422) and suppresses the pop sound when the power is turned ON. A microprocessor controls AMUT and cancels muting at an appropriate time.

When the power is turned OFF, muting is also controlled by AMUT, but is done only if the power switch ON TS-870S is pressed. The circuit comprising Q25 : DTA143EK, Q26 : DTC124XK, and Q27 : DTC143EK suppresses the pop sound when the external power supply switch is turned OFF. When this switch is turned OFF, the voltage of the AF amplifier power supply 14A decreases. When the 14A voltage falls, Q25 becomes active (ON), and then Q26 becomes active (the collector goes LOW to mute the AF amplifier and suppress the pop sound. Q27 prevents muting when the voltage of the AF amplifier power supply 14A falls during transmission.

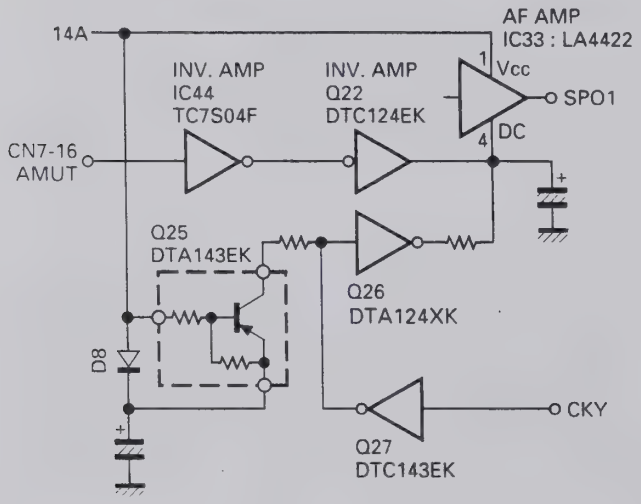

The TS-870S uses AF amplifier IC33: LA4422 pin 4 (DC) as the mute pin.

Fig. 25 Pop mute circuit

■ Transmit/receive frequency characteristics correction circuit

The transmission sound quality has a flat frequency characteristic due to DSP modulation. However, the low-frequency range is also flat to the cut-off frequency, so the model has less clarity compared to the conventional transceivers. A correction circuit is provided to suppress the low-frequency range. It consists of R141, R155, and C145 in the TX-RX unit, and it is –2dB at 300Hz for 1kHz.

To return to the flat frequency characteristic, remove C145 and replace R155 with a 1.8kΩ resistor. (See Figure 26.)

The receive frequency is also flat, as well as the hi-fi sound quality when the filter is widened. When the receive frequency is flat, the volume of the low-frequency range becomes insufficient, so a correction circuit that slightly emphasizes the low-frequency range is provided. It consists of R204, R205, R208, and C208 in the TX-RX unit, and it is +2dB at 1kHz for 3kHz.

To return to the flat frequency characteristic, remove R205. (See Figure 26.)

Transmit side

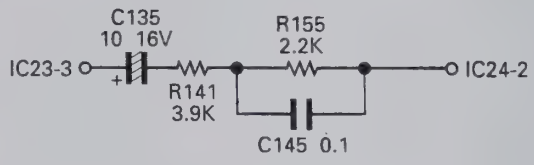

Receive side

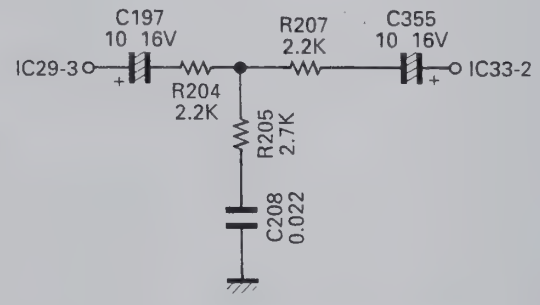

Fig. 26 Transmit/receive frequency characteristics correction circuit

DESCRIPTION OF COMPONENTS

RF UNIT (X44-3210-00) (A/9) : RF

Ref. No.	Use/Function	Operation/Condition
Q1	Switching	On when exit RX on
Q2	Switching	On when TX.
Q3	Switching	Off when ATT1 or ATT2 on.
Q5	TX RF amplifier	Drive output (TX frequency)
Q6	Switching	DATT on
Q7	Switching	1/2 : 30kHz~490kHz 2/2 : 490kHz~1.62MHz
Q8	Switching	1/2 : 1.62MHz~2.49MHz 2/2 : 2.49MHz~3.99MHz
Q9	Switching	1/2 : 3.99MHz~6.99MHz 2/2 : 7.30MHz~10.49MHz
Q10	Switching	1/2 : 6.99MHz~7.30MHz 2/2 : 13.99MHz~14.49MHz
Q11	Switching	1/2 : 20.99MHz~21.49MHz 2/2 : 21.49MHz~30.00MHz
Q12	Switching	1/2 : 14.49MHz~20.99MHz 2/2 : 10.49MHz~13.99MHz
Q13	RF amplifier	21.49MHz~30.00MHz
Q14, 15	RF amplifier	30kHz~21.49MHz
Q16	Amplifier	LO1 : 73.08MHz~103.05MHz
Q17~20	Mixer	$f_{LO1} - f_{RF} = 73.05MHz$
Q21	Ripple filter	14S
Q22	Amplifier	73.05MHz
Q23	Mixer	73.05MHz – 64.22MHz = 8.83MHz
Q24	Amplifier/AGC	73.05MHz
Q26, 27	Mixer	73.05MHz – 64.22MHz = 8.83MHz
Q28	Amplifier	8.83MHz
Q29~31	Amplifier/AGC	8.83MHz
Q32	AGC	NB (Noise blanker)
Q33	Amplifier/AGC	8.83MHz
Q35, 36	Mixer	73.05MHz → TX f
Q37, 38	Mixer	8.83MHz → 73.05MHz
Q39	Amplifier	TX IF
Q42	Switching	RF blanking
Q43, 44	DC amplifier	ALC
Q45, 46	Switching	On when AM mode.
Q47	DC amplifier	ALC
Q48	Switching	On when AM transmission mode.
Q49	Switching	
Q50	DC amplifier	ALC amplifier
Q51	Switching	Pulse generate when AM transmission mode.
Q52	DC amplifier	ALC amplifier
Q54	Switching	Off when NB.
Q55	Switching	Make relay for linear.
Q56	Switching	On when TX.
Q57, 59	Switching	TXB generate
Q58, 60	Switching	RXB generate
Q61	Switching	On when AIP off (0~21.49MHz).
Q62	Switching	On when AIP off (21.49~30MHz).
Q63	Switching	On when AIP off.
Q64	Switching	On when AIP on.
Q65	Switching	12V when RX.
Q66	Switching	On when RX.
Q70, 71	Switching	CKY
IC1	Serial/Parallel conversion	BPF selection
IC2	Serial/Parallel conversion	
IC6	OP amplifier	ALC meter
IC7	DAC	8 ch
IC8	Meter amplifier	VSF, VSR, ALC and Processor

DESCRIPTION OF COMPONENTS

Ref. No.	Use/Function	Operation/Condition
IC9	Comparator	NB pulse
IC10	AVR	8V → 5V
D1~3	Relay surge absorption	
D4~7	Large input protection	
D8	RF switch	On when RX.
D10	RF switch	On when TX.
D11~33, 35	RF switch	BPF switch
D36, 37	RF switch	On when AIP on.
D38, 39	RF switch	ON when 21.49MHz or more RF amplifier selection.
D40, 41	RF switch	On when 21.50MHz or less RF amplifier selection.
D42	RF switch	
D43	RF switch	LO2 (64.22MHz) switch
D46	RF switch	Noise detection
D47	RF switch	TGC voltage control
D49	RF switch	Gain control
D50	Zener diode	–6.2V stability
D51	LED	Voltage generate
D52	Zener diode	12V (ALC voltage for linear)
D53	Switch	Pulse generate
D54	Reverse current prevention	
D55	Zener diode	3V (Voltage shift)
D56	Switch	ALC
D57	LED	CKY
D58	Relay surge absorption	
D59	Reverse current prevention	RBK
D60	RF switch	On when 29MHz.
D61	RF switch	On when AIP on.
D62	RF switch	On when RX.
D63, 64	RF switch	8.83MHz filter changeover (15kHz).
D65, 66	RF switch	8.83MHz filter changeover (3kHz).
D67	RF switch	8.83MHz filter changeover (6kHz).
D68	RF switch	On when TX.
D69	RF switch	8.83MHz filter changeover (6kHz).
D70	Zener diode	6.2V (Voltage shift)
D71	Zener diode	4.7V (Voltage stability)
D72	Switch	CKY

RF UNIT (X44-3210-00) (B/9) : PLL

Ref. No.	Use/Function	Operation/Condition
Q500	Buffer	D/A buffer
Q501	Amplifier	20MHz (f_{STD})
Q502	Mixer IC506 input buffer	5.46~4.46MHz
Q503	Buffer	D/A buffer
Q504, 505	Switching	Chopper
Q506	Buffer	Output for chopper
Q507	Amplifier	LO3 (8.375MHz)
Q508	Buffer	For LO3 output
Q510	Buffer	D/A buffer
Q511	Buffer	For LO4 output
Q512	Amplifier	REF 20MHz
Q513	Tripled circuit	f_{SDT} x 3 = 60MHz
Q514, 515	Buffer	Reference oscillator 20MHz
Q516	VCO A changeover	
Q517	VCO B changeover	

DESCRIPTION OF COMPONENTS

Ref. No.	Use/Function	Operation/Condition
Q518	VCO C changeover	
Q519	VCO D changeover	
Q520	VCO A	73.08~80.54MHz
Q521	VCO B	80.54~87.54MHz
Q522	VCO C	87.54~94.54MHz
Q523	VCO D	94.54~103.05MHz
Q524	Buffer	VCO A~VCO D output (73.08~103.05MHz)
Q525	Mixer IC508 input buffer	73.08~103.05MHz
Q526	Buffer	For LO1 output
Q527	Active LPF	Comparison 1MHz
Q528, 529	Active LPF	
Q530	Amplifier	PLL IC IC507 input (18~48MHz)
Q531	Amplifier	18~48MHz
Q532	Amplifier	LO2A output (64.22MHz)
Q533	Switching	PLL unlock signal output ("H" : Unlock)
Q534~536	Active LPF	Comparison 20kHz (5kHz in FM mode)
Q537	Switching	FM modulation input on/off
Q539	Buffer	For LO2A outrput
Q800	Reference oscillator	Reference frequency 20MHz oscillation.
IC500	DDS	1.46~0.46MHz for LO1
IC501	DDS	1.625MHz for LO3
IC502	DDS	For LO4
IC503	Divider	20MHz x (1/5) = 4MHz
IC505	Mixer	1.46~0.46MHz → 5.46~4.46MHz
IC506	Mixer	5.46~4.46MHz → 54.54~55.54MHz
IC507	PLL	2~5 : Frequency division ratio input 6 : 18~48MHz input 9 : Lock voltage output 11 : Unlock output (Unlock : "L") 15 : 20MHz input
IC508	Mixer	73.05~103.05 + 54.54~55.54 = 18~48MHz
IC509	PLL	2~5 : Frequency division ratio input 6 : 64.22MHz input 9 : Lock voltage output 11 : Unlock output (Unlock : "L") 15 : 20MHz input
IC510	AVR	13.8V → +9V
IC511	AVR	13.8V → +9V low drop-out
D500	Vari-cap diode	VCO A
D501	Switching	VCO A output
D502	Vari-cap diode	VCO B
D503	Switching	VCO B output
D504	Vari-cap diode	VCO C
D505	Switching	VCO C output
D506	Vari-cap diode	VCO D
D507	Switching	VCO D output
D508	Reverse current prevention	Unlock signal detection

FINAL UNIT (X45-351X-XX) (A/5) : FINAL 0-00 : K,P,M,M2,X 2-71 : E,E2,E3,E9

Ref. No.	Use/Function	Operation/Condition
Q501	Pre-drive amplifier	Wide-band amplification of HF band
Q502, 503	Drive amplifier	Push-pull wide-band amplification of HF band
Q504	Drive bias supply	Temperature compensation of drive
Q505, 506	Final amplifier	Push-pull wide-band amplification of HF band
Q507	Final bias supply	Temperature compensation of final
D501	Temperature compensation	Temperature sensing of pre-drive
D502	Temperature compensation	Temperature sensing of drive
D503	Temperature compensation	Temperature sensing of final
D504	Reverse power connection protection	

DESCRIPTION OF COMPONENTS

FINAL UNIT (X45-351X-XX) (B/5) : FILTER

Ref. No.	Use/Function	Operation/Condition
Q1~5	Relay driver	
Q6	Switch	Antenna tuner through tune
Q10~16	Relay driver	
IC1	Band data decoder	
D1	High-frequency rectification	Reflected wave rectification
D2	High-frequency rectification	Forward wave rectification
D3	Voltage stabilization	5.1V
D4	Relay surge absorption	1.6~2.0MHz LPF relay
D5	Relay surge absorption	2.0~4.0MHz LPF relay
D6	Relay surge absorption	4.0~7.5MHz LPF relay
D7	Relay surge absorption	7.5~10.5MHz LPF relay
D8	Relay surge absorption	10.5~14.5MHz LPF relay
D9	Relay surge absorption	14.5~21.5MHz LPF relay
D10	Relay surge absorption	21.5~30.0MHz LPF relay
D11	Switching	

FINAL UNIT (X45-351X-XX) (C/5) : CONNECTION

Ref. No.	Use/Function	Operation/Condition
Q401~403	DC/DC	–6V
Q404	Ripple filter	14S → 14V
Q405	Ripple filter, AVR	
Q460, 461	Mixer	RX
Q470, 471	Mixer	TX
Q472, 475	Amplifier	TX IF
IC402	5V AVR	8V → 5V (For PLL)
D401	Rectification	
D402	Current stabilization	9V
D450	Reverse current prevention	
D451~456	RF switch	BPF switch
D457	Reverse current prevention	

FINAL UNIT (X45-351X-XX) (D/5) : AVR

Ref. No.	Use/Function	Operation/Condition
Q601	Switch	14S supply when power switch on.
Q701	Switch	On when fan operation
Q702, 703	Switch	Fan motor drive
IC601	8V AVR	13.8V → 8V (Analog 8V : 8A)
IC602	8V AVR	13.8V → 8V (Digital 8V : 8D)
IC701	Comparator	Fan control
D601	Relay surge absorption	
D701	Reverse current prevention	
D702	Surge absorption	

FINAL UNIT (X45-351X-XX) (E/5) : RELAY

Ref. No.	Use/Function	Operation/Condition
D301	Lightning surge protection	ANT1
D302	Lightning surge protection	ANT2
D303	Relay surge absorption	Antenna changeover relay
D304	Relay surge absorption	TX/RX changeover relay

DESCRIPTION OF COMPONENTS

AT UNIT (X53-3340-02)

Ref. No.	Use/Function	Operation/Condition
Q1, 2	Amplifier	Waveform shaping
Q3	Switching	On when APRE is "H".
Q4, 5	Switching	Motor speed control pulse
IC1	DFF	Phase difference detection 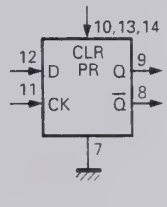 Function table: INPUTS (CLOCK, D) / OUTPUTS (Q, $\overline{Q}$): ↑, L, L, H; L, X, Qo, $\overline{Qo}$
IC2	Analog switch	For control changeover motor 1 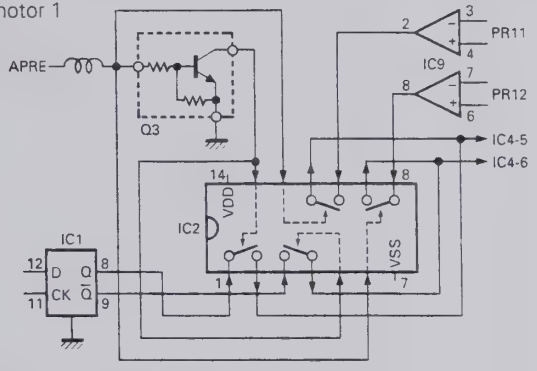
IC3	Analog switch	For control changeover motor 2 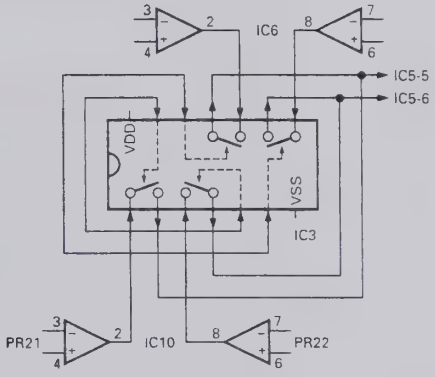
IC4	Motor drive	For motor 1 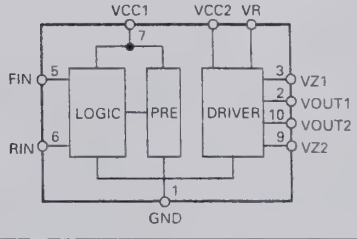
IC5	Motor drive	For motor 2
IC6	Comparator	Amplification difference detection
IC7	AVR	+5V
D1	Detector	Current component amplification detection
D2	Detector	Voltage component amplification detection
D3~8	Switching	Clipper
D10	Switching	Spike absorption
D101~103	Switching	Spike absorption
D105~108	Switching	Spike absorption
D109, 110	Switching	Band data

DESCRIPTION OF COMPONENTS

CONTROL UNIT (X53-356X-XX) (A/4) : CONTROL

0-11 : K,P 0-21 : M 0-22 : M2 0-71 : X 2-71 : E 2-72 : E2 2-73 : E3 2-74 : E9

Ref. No.	Use/Function	Operation/Condition
Q1, 2	Switching	Voltage drop changeover
Q3, 4	Switching	Multiplexer changeover
Q5	Switching	EEPROM write control changeover
Q6~11	Switching	AT control (PR11, PR12, PR21, PR22, APRE, SPED)
Q12, 13	Switching	AT-300 control and input (TS, TT)
Q14, 15	Switching	AT-300 control and output (TS, TT)
Q16	Switching	IC24 control (Reset)
Q17~19, 22	Switching	IC24 control (CH1, 2, 3, 4)
Q20, 24	Switching	IC24 control (DOT)
Q21, 23	Switching	IC24 control (DASH)
Q27	Switching	VBSY signal
Q28	Switching	KEY signal
Q29	Switching	Filter changeover (6kHz)
Q30	Switching	Filter changeover (3kHz)
Q31	Switching	Filter changeover (15kHz)
Q33	Switching	BLNK signal
IC1, 2	Regulator	5V output
IC3	Regulator	8V output
IC4	EEPROM	Adjustment data saving
IC5	Reset, Power supply changeover	System reset and Back-up power supply changeover
IC6	CPU	8 bit microcomputer (Main)
IC7, 10	Inverter	Reverse data
IC8	RAM	8K-byte
IC9, 13	Multiplexer	A/D data changeover
IC11	OR gate	RD/WR signal output
IC12	ROM	64K-byte
IC14	AND gate	Chip select combination for RAM and ROM
IC15	Bidirectional buffer	Data bus input/output changeover
IC16, 22, 23	Extended I/O	8 bit x 4, 4 bit x 1
IC17, 18	Decoder	Converts the address signal into a chip select signal for each IC.
IC19	Latch	Chip select signal latch
IC20, 21	Encoder gate array	Encoder pulse count
IC24	CPU	8 bit microcomputer (Electronic keyer)
IC25, 26	Schmitt trigger	Encoder chattering absorption
IC27	Level shift	RS-232 level shift
IC28	OP amplifier	Buffer
IC29	OR gate	CKY signal and BPC signal combination
D1~3	Protection diode	Power supply
D4	Voltage detector	Voltage drop detection (About 10V)
D5	Protection diode	Reverse current prevention
D6	Protection diode	KEYS line
D7	Protection diode	DASH line
D8	Protection diode	DOT line
D9	Protection diode	MD line
D10	Protection diode	MU line
D11	Protection diode	KEY line
D12	Protection diode	SS line

DESCRIPTION OF COMPONENTS

CONTROL UNIT (X53-356X-XX) (B/4) : SW

Ref. No.	Use/Function	Operation/Condition
Q501, 502	LED switch	
IC501~504	Serial/Parallel	Data conversion for tact switch and LED
D501, 502	LED	
D510~519	LED	

TX-RX UNIT (X57-4620-00)

Ref. No.	Use/Function	Operation/Condition
Q1	Switch	Change SS line to low when VOX active.
Q2	Amplifier	64.22MHz
Q3	Amplifier	REF 20MHz
Q4	Switch	On/Off when squelch open/close (For packet).
Q5, 7	Active LPF	
Q6	Active LPF	PLL loop filter
Q8	VCO	46.32MHz oscillation circuit
Q9, 10	VCO	Output buffer
Q12	Amplifier	LO4 466kHz
Q13, 15	Buffer	TX IF 455kHz
Q14	Amplifier	TX IF 455kHz
Q16	Buffer	Receive signal for DSP processing (11.3kHz)
Q17	Buffer	ACC2 audio output
Q22	Switch	Mute signal (Power on/off)
Q23	Buffer	RX IF 455kHz
Q25	Pulse generator	AF mute
Q26	Switch	Mute signal
Q27	Switch	Mute signal absorption (Mute inhibit when TX)
IC1	DSP A	Main DSP
IC2	DSP B	Sub DSP
IC3	Gate array	For interface
IC4	DSP ROM	Low (D0~D7) 32KB
IC5	DSP ROM	Mid (D8~D15) 32KB
IC6	DSP ROM	High (D16~D23) 32KB
IC7	DSP RAM	8K ward
IC9	PLD	Timing generator
IC15	PLL IC	46.32MHz clock generation
IC16	DAC	Rch : BEEP signal (About 1kHz) Lch : Transmission signal (11.3kHz)
IC17	Active filter	TX (fc = 49.1kHz) 3rd LPF
IC18	Mixer	RX : 455kHz → 11.3kHz TX : 11.3kHz → 455kHz
IC19	Voltage follower, Active LPF	Reference voltage buffer, BEEP LPF (fc = 1.9kHz)
IC20	Voltage follower	Reference voltage buffer
IC21	LPF, Buffer	RX IF 11.3kHz
IC22	Amplifier	Microphone amplifier, unbalanced/balanced modulation
IC23	Multiplexer	MIC, DATA, DRU-3 changeover
IC24	LPF, Buffer	TX microphone amplifier, unbalanced/balanced modulation
IC25	ADC	Rch : Reception signal Lch : Microphone input signal
IC26	DAC	VCA control
IC27	DAC	Rch : Monitor signal Lch : De-modulation signal
IC28	Active LPF	De-modulation signal (fc = 10.6kHz)
IC29	VCA (Electronic volume)	De-modulation signal, BEEP
IC30	Active LPF	Monitor signal (fc = 5.3kHz)
IC31	VCA (Electronic volume)	Packet AF, monitor
IC33	AF amplifier	Audio amplifier

DESCRIPTION OF COMPONENTS

Ref. No.	Use/Function	Operation/Condition
IC34	DAC	Rch : AGC signal Lch : FM modulation signal
IC35	I-V converter, Inverter	AGC and S-meter voltage
IC36	I-V converter, Active LPF	FM modulation signal (fc = 7.2kHz)
IC37	AVR	13.8V → Analog 5V
IC38	AVR	Digital 8V → Digital 5V
IC39	AVR	13.8V → 5V for PLL
IC40	AVR	13.8V → 8V for PLL
IC41, 42	Buffer	VCA control
IC43	Clipper amplifier	RX IF 455kHz
IC44	Inverter	Mute (Power on/off)
D1~4	Reverse current prevention	
D5	VCO bari-cap diode for DSP	64.32MHz oscillation
D7, 8	Reverse current prevention	

SEMICONDUCTOR DATA

PLL : MB86001PF (RF Unit IC507, 509, TX-RX Unit IC15)

■ Terminal connection diagram

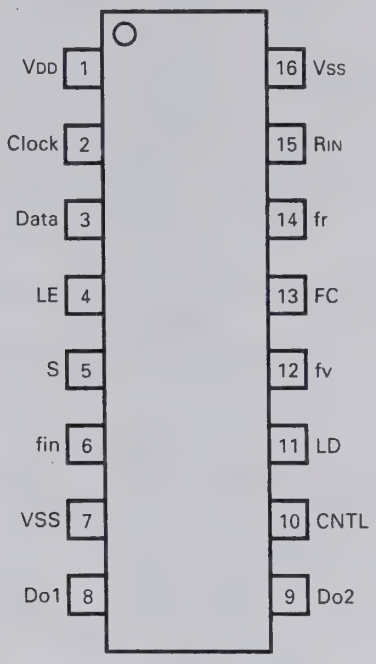

■ Terminal functions

Pin No.	Pin code	I/O	Function
1	VDD	–	Power supply pin.
2	Clock	I	Shift register clock input pin. Serial data is taken in at the rising edge of the clock signal. The input section contains a Schmitt trigger circuit.
3	Data	I	Serial data input pin for setting the divide ratio of each divider. The input section contains a Schmitt trigger circuit.
4	LE	I	Shift register load enable signal input pin. When LE is high, the divider ratio data is transferred to the latch specified by the control bit. This data is used as the divide ratio of each divider. The input section contains a Schmitt trigger circuit.
5	S	I	Switch pin for selecting the latch for setting the divide ratio of each divider. When the S pin is low, latch V1 is selected. When the S pin is high, latch V2 is selected. The divide ratio data is then sent to the divider.
6	fin	I	Divider input pin. The input section contains a bias circuit and an amplifier. Connect the voltage control oscillator (such as a VCO) by AC-coupling.
7	Vss	–	Ground pin.
8	Do1	O	Phase comparator output pin (charge pump). The Do1 output level can be reversed by FC. The reference divider output fr and divider output fv are related as follows. On when CNTL is low. fr > fv : High level (FC : Low), Low level (FC : High), fr = fv : High impedance, fr < fv : Low level (FC : Low), High level (FC : High)
9	Do2	O	Phase comparator output pin (charge pump). The relationships between the reference divider output fr and divider output fv are the same as for Do1. On when CNTL is high.
10	CNTL	I	Pin that controls charge pump outputs Do1 and Do2. The relationships between CNTL, Do1 and Do2 are as follows. When CNTL is low, Do1 : Output, Do2 : High impedance. When CNTL is high, Do1 : High impedance, Do2 : Output
11	LD	O	Phase comparator output pin When PLL is locked, LD is high. When PLL is unlocked, LD is low
12	fv	O	Divider division output monitor pin. A signal is output from the pin in monitor mode. Normally, this pin has high impedance.
13	FC	I	Phase comparator input switch pin.
14	fr	O	Reference divider division output monitor pin. A signal is output from this pin in monitor mode. Normally, this pin has high impedance.
15	RIN	I	Reference divider input pin. The input section contains a bias circuit and an amplifier. Connect the reference oscillator (such as TCXO) by AC-coupling.
16	Vss	–	Ground pin.

SEMICONDUCTOR DATA

Bidirectional buffer : TC74VHC245F (COntrol Unit IC15)

■ Terminal connection diagram

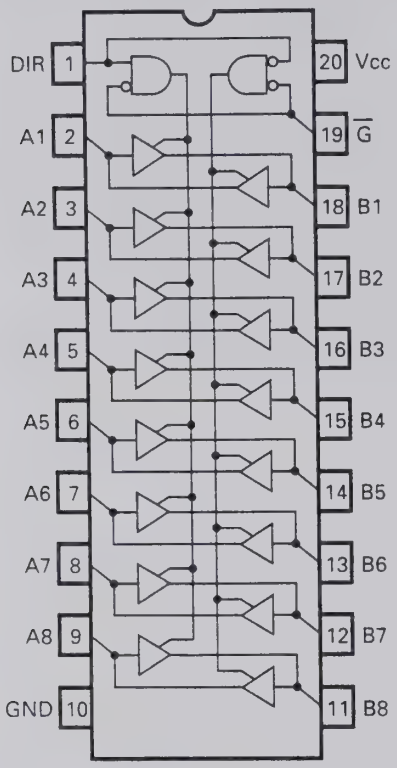

■ Logic diagram

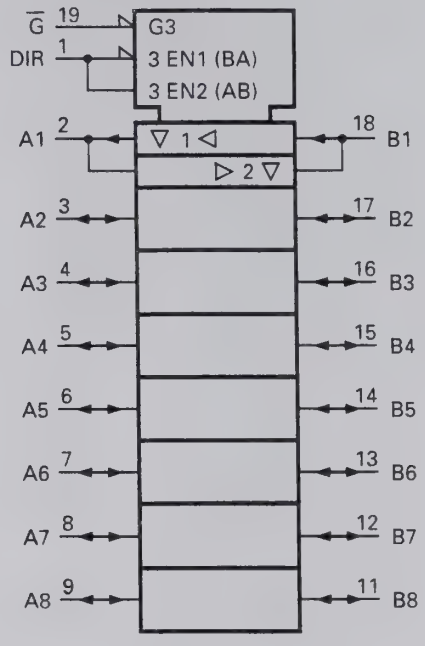

■ Truth table

Input		Function		Output
$\overline{G}$	DIR	A bus	B bus	state
L	L	Output	Input	A=B
L	H	Input	Output	B=A
H	X	High impedance		Z

X : Don't Care Z : High impedance

SEMICONDUCTOR DATA

DC/AC Converter : AK4318-VS (TX-RX Unit IC16, 27)

■ Terminal connection diagram

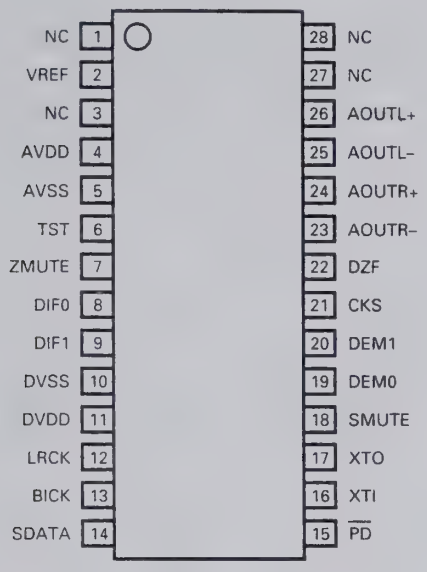

■ Block diagram

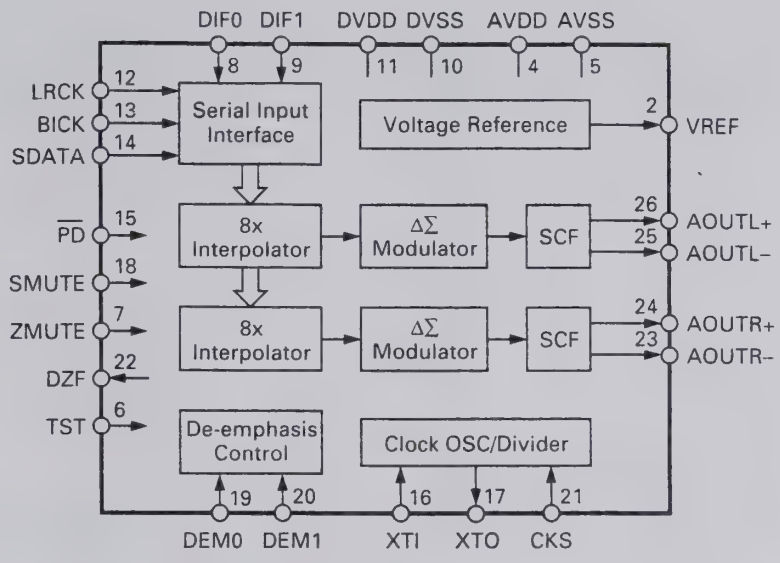

■ Terminal functions

Pin No.	Pin name	I/O	Function
1	NC	–	
2	VREF	O	Reference voltage output pin (AVDD) – 3.75V. The 10µF electrolytic capacitor and 0.1µF ceramic capacitor are connected between VREF and AVDD.
3	NC	–	
4	AVDD	–	Analog power supply pin (+5V).
5	AVSS	–	Analog ground pin.
6	TST	I	Test pin (pull down). Must be open or low.
7	ZMUTE	I	Zero mute pin (pull down). High : Detects zero and mutes output.
8, 9	DIF0, DIF1	I	Input format pin. Supports four modes.
10	DVSS	–	Digital ground pin.
11	DVDD	–	Digital power supply pin (+5V).
12	LRCK	I	L/R clock pin. Determines the input serial data channel.
13	BICK	I	Serial bit clock pin. The clock latches serial data.
14	SDATA	I	Serial data input pin. Number two's complement MSB first.
15	$\overline{PD}$	I	Reset pin. When this pin goes low, the filter and modulator are reset. Make this pin low to reset the filter and modulator when the power is turned on.
16	XTI	I	Clock input pin. Connect a crystal oscillator between XTI and XTO or input the external CMOS clock to XTI. The clock frequency can be selected with the CKS pin.
17	XTO	O	Crystal oscillator output pin. If the crystal oscillator is used, connect it between the XTO and XTI pins. If the external clock is used, open this pin.
18	SMUTE	I	Soft mute pin (pull down). High : Soft mute, Low : Cancel
19, 20	DEM0, DEM1	I	De-emphasis mode pin. Supports three frequencies.
21	CKS	I	Clock select pin. Low : CLK 256 fd, High : CLK 384 fs
22	DZF	O	Zero input detection pin. High when the data input to the SDATA pin for both channels becomes zero 8192 times consecutively.
23	AOUTR–	O	Right-channel analog negative output pin.
24	AOUTR+	O	Right-channel analog positive output pin.
25	AOUTL–	O	Left-channel analog negative output pin.
26	AOUTL+	O	Left-channel analog positive output pin.
27, 28	NC	–	

SEMICONDUCTOR DATA

AC/DC Converter : AK5340-VS (TX-RX Unit IC25)

■ Terminal connection diagram

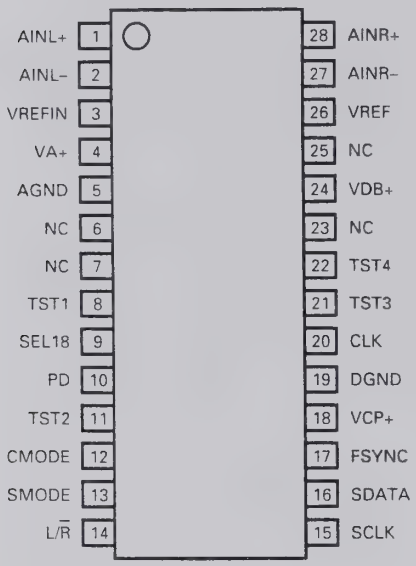

■ Block diagram

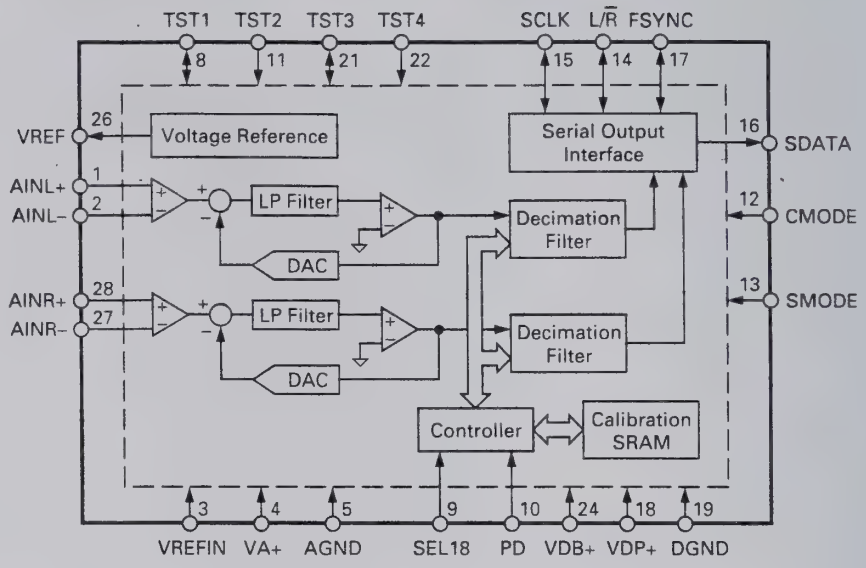

■ Terminal functions

Pin No.	Pin name	I/O	Function
1	AINL+	I	Left-channel analog non-inverted input pin.
2	AINL–	I	Left-channel analog inverted input pin.
3	VREFIN	I	Reference voltage input pin. Normally connect to the VREF pin. The input range is 1.6 times the difference between VA+ and the voltage input to this pin.
4	VA+	–	Analog section analog power supply pin (+5V).
5	AGND	–	Analog section analog ground pin.
6, 7	NC	–	
8	TST1	–	Test pin. Open or connect to DGND.
9	SEL18	I	Output data length select pin (with pull down resistor). Low : 16 bits, High : 18 bits
10	PD	I	Power down pin. High : Power down mode. Offset calibration starts at a falling edge. When the power is turned on or the clock frequency is changed, calibration must be carried out.
11	TST2	–	Test pin. Open or connect to DGND.
12	CMODE	I	Master clock select pin. Low : CLK 256 fs (12.288MHz @fs : 48kHz), High : CLK 384 fs (18.432MHz @fs : 48kHz)
13	SMODE	I	Interface clock select pin. Set the input/output of each of the L/R̄, SCLK, and FSYNC clock pins. Low : Save mode (all input pins), High : Master mode (all output pins)
14	L/R̄	I/O	Input channel select pin. Slave mode : The fs clock is input. Lch MSB data is output at a rising edge and Rch MSB data is output at a falling edge of the clock signal. Master mode : The fs clock is output. SDATA is output one clock after the L/R̄ edge. High when the power is down (PD : High).
15	SCLK	I/O	Serial data clock pin. One bit of data is output at a falling edge of the clock. Slave mode : Normally a 32 to 64 fs clock is input. Master mode : A 64 fs clock is output. Low when the power is down (PD : High).
16	SDATA	O	Serial data output pin. Data is number two's complement and the MSB is output first. Goes low after 16/18 bits are output. Low when the power is down (PD : High).
17	FSYNC	I/O	Frame synchronization clock pin. Slave mode : SDATA output is enabled when the pin is high. Master mode : The 2 fs clock is output. High when 16-bit data is output. The two low-order bits are low when 18-bit output is selected. Low when the power is down (PD : High).
18	VDP+	–	Digital section power supply pin (+5V).
19	DGND	–	Digital section ground pin.
20	CLK	I	Master clock input pin. When CMODE is high, CLK : 384 fs. When CMODE is low, CLK : 256 fs.
21, 22	TST3, TST4	–	Test pin. Open or connect to DGND.

SEMICONDUCTOR DATA

Pin No.	Pin name	I/O	Function
23	NC	–	
24	VDB+	–	Digital section power supply pin (+5V). (Silicon PCB potential)
25	NC	–	
26	VREF	O	Reference voltage output pin (VA+) – 2.6V. Output based on VA+. Normally connect this output to the VREFIN pin
27	AINR–	I	Right-channel analog inverted output pin.
28	AINR+	I	Right-channel analog non-inverted output pin.

DC/AC Converter : PCM69AU (TX-RX Unit IC34)

■ Terminal connection diagram

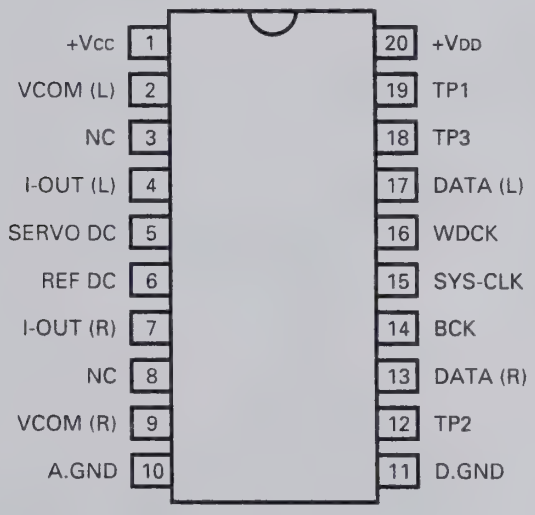

■ Terminal functions

Pin No.	Pin name	Function
1	+VCC	Analog Positive power supply
2	VCOM (L)	Lch V common
3	NC	
4	I-OUT (L)	Lch current output
5	SERVO DC	Servo filter
6	REF DC	Reference filter
7	I-OUT (R)	Rch current output
8	NC	
9	VCOM (R)	Rch V common
10	A. GND	Analog common
11	D. GND	digital common
12	TP2	Test pin 2
13	DATA (R)	Rch data input
14	BCK	Bit clock input
15	SYS-CLK	System clock input
16	WDCK	Word clock input
17	DATA (L)	Lch data input
18	TP3	Test pin 3
19	TP1	Test pin 1
20	+VDD	Digital positive power supply

PARTS LIST

CAPACITORS

CC 45 TH 1H 220 J
1 2 3 4 5 6

1 = Type ... ceramic, electrolytic, etc.
2 = Shape ... round, square, ect.
3 = Temp. coefficient
4 = Voltage rating
5 = Value
6 = Tolerance

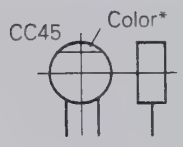

• Capacitor value

010 = 1pF
100 = 10pF
101 = 100pF
102 = 1000pF = 0.001μF
103 = 0.01μF

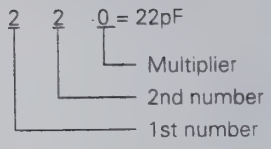

• Temperature coefficient

1st Word	C	L	P	R	S	T	U
Color*	Black	Red	Orange	Yellow	Green	Blue	Violet
ppm/°C	0	–80	–150	–220	–330	–470	–750

2nd Word	G	H	J	K	L
ppm/°C	±30	±60	±120	±250	±500

Example : CC45TH = –470 ± 60ppm/°C

• Tolerance

Code	C	D	G	J	K	M	X	Z	P	No code
(%)	±0.25	±0.5	±2	±5	±10	±20	+40	+80	+100	More than 10μF – 10 ~ +50
							–20	–20	–0	Less than 4.7μF –10 ~ +75

Less than 10pF

Code	B	C	D	F	G
(pF)	±0.1	±0.25	±0.5	±1	±2

• Voltage rating

1st word \ 2nd word	A	B	C	D	E	F	G	H	J	K	V
0	1.0	1.25	1.6	2.0	2.5	3.15	4.0	5.0	6.3	8.0	–
1	10	12.5	16	20	25	31.5	40	50	63	80	35
2	100	125	160	200	250	315	400	500	630	800	–
3	1000	1250	1600	2000	2500	3150	4000	5000	6300	8000	–

• Chip capacitors (Refer to the table above except dimension)

(EX) CC 73 F SL 1H 000 J
1 2 3 4 5 6 7
(Chip) (CH, RH, UJ, SL)

(EX) CK 73 F F 1H 000 Z
1 2 3 4 5 6 7
(Chip) (B, F)

RESISTORS

• Chip resistor (Carbon)

(EX) RD 73 E B 2B 000 J
1 2 3 4 5 6 7
(Chip) (B,F)

• Carbon resistor (Normal type)

(EX) RD 14 B B 2C 000 J
1 2 3 4 5 6 7

1 = Type ... ceramic, electrolytic, etc.
2 = Shape ... round, square, ect.
3 = Dimension
4 = Temp. coefficient
5 = Voltage rating
6 = Value
7 = Tolerance

Dimension

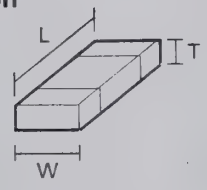

• Dimension (Chip capacitor)

Dimension code	L	W	T
Empty	5.6 ± 0.5	5.0 ± 0.5	Less than 2.0
E	3.2 ± 0.2	1.6 ± 0.2	Less than 1.25
F	2.0 ± 0.3	1.25 ± 0.2	Less than 1.25

• Dimension (Chip resistor)

Dimension code	L	W	T	Wattage
E	3.2 ± 0.2	1.6 ± 0.2	0.57	2B
F	2.0 ± 0.3	1.25 ± 0.2	0.45	2A

Rating wattage

Code	Wattage	Code	Wattage	Code	Wattage
2A	1/10W	2E	1/4W	3A	1W
2B	1/8W	2H	1/2W	3D	2W
2C	1/6W				

PARTS LIST

∗New Parts. ⚠ indicates safety critical components.
Parts without **Parts No.** are not supplied.
Les articles non mentionnes dans le **Parts No.** ne sont pas fournis.
Teile ohne **Parts No.** werden nicht geliefert.

L : Scandinavia **K**: USA **P** : Canada
Y: PX (Far East, Hawaii) **T**: England **E** : Europe
Y: AAFES (Europe) **X**: Australia **M**: Other Areas

TS-870S

Ref. No.	Address	New parts	Parts No.	Description	Destination
TS-870S					
1	1B	*	A01-2097-01	METALLIC CABINET (UPPER)	
2	3B	*	A01-2098-01	METALLIC CABINET (LOWER)	
33	3A,2D	*	A62-0382-02	PANEL ASSY	
3	2C	*	A62-0384-02	PANEL	
4	2D	*	B10-1227-03	FRONT GLASS	
5	2D	*	B11-1123-04	REFLECTOR	
6	1E	*	B38-0736-05	DISPLAY ASSY	
7	2B		B42-3343-04	S/NO LABBL	
8	3N		B42-5526-04	STICKER	K
9	2C		B43-1045-04	BADGE (KENWOOD)	
10	2C	*	B43-1101-04	BADGE (DSP)	
11	3N		B44-2163-04	UPC CORD LABEL	
12	1O		B46-0310-03	WARRNTY CARD	EE2E3E9
12	1O		B46-0410-40	WARRNTY CARD	K
12	1O		B46-0422-00	WARRNTY CARD	P
13	1O	*	B62-0542-00	INSTRUCTION MANUAL (ENGLISH)	
14	1O	*	B62-0543-00	INSTRUCTION MANUAL (SPANISH)	MM2E2E3
15	1O	*	B62-0544-00	INSTRUCTION MANUAL (NETHERLAND)	MM2E2E3
16	1O	*	B62-0545-00	INSTRUCTION MANUAL (FRENCH)	PMM2
16	1O	*	B62-0545-00	INSTRUCTION MANUAL (FRENCH)	E2E3E9
17	1O	*	B62-0546-00	INSTRUCTION MANUAL (GERMAN)	E
18	1O	*	B62-0547-00	INSTRUCTION MANUAL (ITALIAN)	E
19	2B	*	B72-0911-04	MODEL NAME PLATE	KMM2XP
19	2B	*	B72-0912-04	MODEL NAME PLATE	EE2E3E9
20	1H		E04-0167-05	RF COAXIAL CABLE RECEPTACLE (M)	
21	1N		E07-0751-05	DIN PLUG (7P) ACSY	
22	1N		E07-1351-05	DIN PLUG (13P) ACSY	
23	1H		E23-0992-04	EARTH LUG (ANT)	
24	1N	*	E30-3157-15	DC CORD ACSY	
W51	2K,3K		E31-3433-05	LEAD WIRE WITH MINIPIN PLUG	
W52	3I,4K		E37-0062-05	LEAD WIRE WITH MINIPIN PLUG	
W53	2I,4K	*	E37-0518-05	LEAD WIRE WITH MINIPIN PLUG	
W54	1I,2I	*	E37-0519-05	LEAD WIRE WITH MINIPIN PLUG	
W56	1J,2K	*	E37-0521-05	LEAD WIRE WITH MINIPIN PLUG	
W57	1I,4K	*	E37-0522-05	LEAD WIRE WITH MINIPIN PLUG	
W58	1I	*	E37-0523-05	FLAT CABLE	
W59	2I,1J	*	E37-0524-05	FLAT CABLE	
W60	2A	*	E37-0526-05	FLAT CABLE	
W61	2A	*	E37-0527-05	FLAT CABLE	
W62	3I	*	E37-0528-05	FLAT CABLE	
W63-1	4J	*	E37-0529-05	FLAT CABLE	
W63-2	3I,4I	*	E37-0529-05	FLAT CABLE	
W64	4J	*	E37-0530-05	FLAT CABLE	
W65	3I	*	E37-0531-05	FLAT CABLE	
W66	3I,4I	*	E37-0532-05	FLAT CABLE	
W67	2A	*	E37-0533-05	FLAT CABLE	
W68	2A	*	E37-0534-05	FLAT CABLE	
W69	2I,4I	*	E37-0535-05	LEAD WIRE WITH MINIPIN PLUG	
W70	2A	*	E37-0537-05	LEAD WIRE WITH CONNECTOR	
W71	1I,1J	*	E37-0538-05	LEAD WIRE WITH CONNECTOR	
W72	1I,4K	*	E37-0540-05	LEAD WIRE WITH CONNECTOR	
W73	1I,1J	*	E37-0541-15	LEAD WIRE WITH CONNECTOR	
W74	1K	*	E37-0542-05	LEAD WIRE WITH CONNECTOR	
W75	2J	*	E37-0543-05	LEAD WIRE WITH CONNECTOR	
W76	2A	*	E37-0547-15	LEAD WIRE WITH CONNECTOR (SP)	
W77	2J	*	E37-0548-05	LEAD WIRE WITH CONNECTOR	
W78	2I,4I	*	E37-0549-05	LEAD WIRE WITH CONNECTOR	
W79	2A	*	E37-0550-15	LEAD WIRE WITH CONNECTOR	
W80	2I,4J	*	E37-0551-05	LEAD WIRE WITH CONNECTOR	
W81	1I,4I	*	E37-0552-05	LEAD WIRE WITH CONNECTOR	
W82	2K,3K	*	E37-0569-05	LEAD WIRE WITH MINIPIN PLUG	
W83	–	*	E37-0570-05	LEAD WIRE WITH CONNECTOR (VS-2)	
26	1N		F05-2531-05	FUSE (25A/32V) ACSY	
27	1N		F06-4029-05	FUSE (4A/250V) ACSY	
28	2G	*	F09-0449-05	FAN MOTOR	
29	3G		F10-1206-04	SHIELDING COVER (EARTH SPRING)	
30	2B,1G		F10-1468-13	SHIELDING COVER (FINAL)	
31	1G		G02-0574-04	FLAT SPRING (AVR)	
32	2G	*	G02-0767-04	FLAT SPRING (THERMMISTOR)	
34	1A		G10-0697-04	FIBROUS SHEET (SP)	
35	1D		G10-0702-04	FIBROUS SHEET (SUB 2)	
36	1A		G10-0703-04	FIBROUS SHEET (CASE)	
39	1B		G13-0934-04	CUSHION (UPPER CASE)	
40	2G		G13-1310-04	CUSHION (FAN)	
41	4F	*	G13-1327-04	CUSHION (DRU-3)	
42	2D	*	G13-1480-04	CUSHION (KNOB)	
43	2D	*	G13-1481-04	CUSHION (KNOB)	
44	2D	*	G13-1482-04	CUSHION (KNOB)	
45	2D	*	G13-1483-04	CUSHION (KNOB)	
46	1A	*	G13-1498-04	CUSHION (SP)	
47	3B	*	G13-1511-04	CUSHION (LOWER CASE)	
50	2N	*	H10-2791-01	POLYSTYRENE FOAMED FIXTURE (F)	
51	2O	*	H10-2792-11	POLYSTYRENE FOAMED FIXTURE (R)	
52	1N	*	H13-0963-04	CARTON BOARD	
53	2O		H20-1437-03	PROTECTION COVER	
54	1N		H25-0029-04	BAG (FUSE)	
55	1N		H25-0079-04	BAG (MIC)	
56	1N		H25-0708-04	BAG (DC CORD)	
57	2O	*	H52-0730-02	ITEM CARTON CASE	
58	3O	*	H62-0641-03	OUTER PACKING CASE	
59	3B		J02-0049-14	FOOT (REAR)	
60	1A,3A		J02-0441-05	FOOT (SIDE)	
61	3A	*	J02-0474-05	FOOT (FRONT)	
62	2G		J21-4326-03	HARDWARE FIXTURE (FAN)	
63	1D	*	J21-4496-05	HARDWARE FIXTURE (PHONE JACK)	
64	2D		J31-0141-04	COLLAR (MIC)	
65	2H	*	J32-0923-04	HEXAGON BOSS	
–			J61-0307-05	BAND	
70	1B		K01-0416-05	HANDLE ASSY	
71	2C	*	K21-1102-04	KNOB (MAIN : WITH SCREW)	
72	2C	*	K29-4966-04	KNOB RING (MAIN)	
73	2D	*	K29-4967-03	KNOB (FILTER)	
74	2C	*	K29-4968-03	KNOB (M.CH,RIT : WITH SPRING)	
75	2C	*	K29-4969-03	KNOB (INSIDE)	
76	2C	*	K29-4970-03	KNOB (OUTSIDE)	
77	1C	*	K29-4978-03	KNOB (POWER)	
78	1D	*	K29-4979-03	KNOB (UP/DOWN)	

PARTS LSIT

TS-870S
RF UNIT (X44-3210-00)

Ref. No.	Address	New parts	Parts No.	Description	Destination
79	1C	*	K29-4980-03	KNOB (ANT, etc.)	
80	1D	*	K29-4981-03	KNOB (LED)	
81	1C,1D	*	K29-4982-03	KNOB (AT TUNE, etc.)	
82	1D	*	K29-4983-03	KNOB (LED)	
83	1C	*	K29-4984-03	KNOB (QUICK MEMO)	
84	1C	*	K29-4985-03	KNOB (LSB/USB)	
85	1C	*	K29-4986-03	KNOB (CW/-R)	
86	1C	*	K29-4987-03	KNOB (FSK/-R)	
87	1C	*	K29-4988-03	KNOB (FM/AM)	
88	1D	*	K29-4989-03	KNOB (AUTO NOTCH)	
89	1D	*	K29-4990-03	KNOB (BEAT CANCEL)	
90	1D	*	K29-4991-03	KNOB (N.R)	
91	1D	*	K29-4992-03	KNOB (TX EQ.)	
A	1H		N09-0372-04	SCREW (DC)	
B	1H		N09-0682-04	SCREW (GND)	
C	3F		N09-2051-05	SCREW	X
D	1H		N11-0040-46	FLANGE NUT (GND)	
E	1H		N14-0509-05	NUT (GND)	
F	1H		N15-1040-46	FLAT WASHER (GND)	
G	1D,1E		N32-2606-46	FLAT HEAD SCREW	
H	2A,3A		N32-3006-46	FLAT HEAD SCREW (SUB PANEL)	
I	1B,3B		N33-3006-41	OVAL HEAD SCREW (CASE)	
J	2A,2F		N87-2606-46	BRAZIER HEAD SCREW (UNIT,RL)	
K	1A,1H		N87-3006-46	BRAZIER HEAD SCREW (AT,FAN)	
L	2G,2H		N87-3008-46	BRAZIER HEAD SCREW	
M	2B,1G		N88-2608-46	FLAT HEAD SCREW (FINAL)	
N	2D		N90-3008-46	TP HEAD MACHIN SCREW (PANEL)	
P	3A,3B		N91-3010-46	TP HEAD TAPPING SCREW (FOOT)	
SP	1A		T07-0252-15	LOUDSPEAKER (8 ohm 1W)	
MIC	1N		T91-0352-15	MICROPHONE ACSY	
93	1E		W02-1836-05	ENCODER	
BATT	2A	*	W09-0873-05	LITHIUM CELL (3V 220MAh)	

RF UNIT (X44-3210-00)

C1			CK73FB1H103K	CHIP C	0.010UF	K
C2			CC73FCH1H121J	CHIP C	120PF	J
C3			CK73FF1C105Z	CHIP C	1.0UF	Z
C4,5			CK73FB1H103K	CHIP C	0.010UF	K
C6			CK73FB1E103K	CHIP C	0.010UF	K
C7			CK73FB1H103K	CHIP C	0.010UF	K
C8			CK73FB1H102K	CHIP C	1000PF	K
C10			CK73FB1H103K	CHIP C	0.010UF	K
C14			CK73FB1E103K	CHIP C	0.010UF	K
C15			CK73FF1C105Z	CHIP C	1.0UF	Z
C16			CK73FF1E104Z	CHIP C	0.10UF	Z
C17			CK73FF1C105Z	CHIP C	1.0UF	Z
C18			CK73FB1E103K	CHIP C	0.010UF	K
C19			CK73FB1H182K	CHIP C	1800PF	K
C21			CK73FB1H682K	CHIP C	6800PF	K
C22			CK73FB1H182K	CHIP C	1800PF	K
C23			CK73FF1E104Z	CHIP C	0.10UF	Z
C27			CK73FF1E104Z	CHIP C	0.10UF	Z
C28			CE04EW1C100M	ELECTRO	10UF	16WV
C29-31			CK73FF1E104Z	CHIP C	0.10UF	Z
C32			CE04EW1C100M	ELECTRO	10UF	16WV
C33			CK73FF1C105Z	CHIP C	1.0UF	Z

Ref. No.	Address	New parts	Parts No.	Description			Destination
C34			CK73FF1E104Z	CHIP C	0.10UF	Z	
C35			CC73FCH1H050C	CHIP C	5.0PF	C	
C36			CK73FB1H103K	CHIP C	0.010UF	K	
C39,40			CK73FB1E103K	CHIP C	0.010UF	K	
C47			CK73FB1H103K	CHIP C	0.010UF	K	
C48			CK73FB1H223K	CHIP C	0.022UF	K	
C49			CK73FB1H103K	CHIP C	0.010UF	K	
C50			CK73FF1E104Z	CHIP C	0.10UF	Z	
C51			CK73FF1C105Z	CHIP C	1.0UF	Z	
C52			CK73FB1H222K	CHIP C	2200PF	K	
C53			CK73FB1H682K	CHIP C	6800PF	K	
C54			CK73FB1H222K	CHIP C	2200PF	K	
C55			CK73FF1E104Z	CHIP C	0.10UF	Z	
C56			CK73FF1C105Z	CHIP C	1.0UF	Z	
C57			CK73FB1H472K	CHIP C	4700PF	K	
C58			CK73FF1E104Z	CHIP C	0.10UF	Z	
C59			CK73FF1C105Z	CHIP C	1.0UF	Z	
C60			CC73FSL1H821J	CHIP C	820PF	J	
C61			CK73FF1C105Z	CHIP C	1.0UF	Z	
C62			CK73FB1H472K	CHIP C	4700PF	K	
C63			CK73FF1E104Z	CHIP C	0.10UF	Z	
C64			CK73FB1H222K	CHIP C	2200PF	K	
C65			CK73FF1E104Z	CHIP C	0.10UF	Z	
C66			CK73FF1C105Z	CHIP C	1.0UF	Z	
C67			CK73FB1H561K	CHIP C	560PF	K	
C68			CK73FF1C105Z	CHIP C	1.0UF	Z	
C69			CK73FB1H222K	CHIP C	2200PF	K	
C70			CK73FF1E104Z	CHIP C	0.10UF	Z	
C71			CK73FB1H102K	CHIP C	1000PF	K	
C72			CK73FF1E104Z	CHIP C	0.10UF	Z	
C73			CK73FF1C105Z	CHIP C	1.0UF	Z	
C74			CC73FSL1H271J	CHIP C	270PF	J	
C75			CK73FF1C105Z	CHIP C	1.0UF	Z	
C76			CK73FB1H102K	CHIP C	1000PF	K	
C77,78			CK73FF1E104Z	CHIP C	0.10UF	Z	
C80			CK73FF1C105Z	CHIP C	1.0UF	Z	
C81			CC73FCH1H050C	CHIP C	5.0PF	C	
C83			CC73FCH1H050C	CHIP C	5.0PF	C	
C85			CC73FCH1H050C	CHIP C	5.0PF	C	
C87			CK73FF1C105Z	CHIP C	1.0UF	Z	
C88			CK73FF1E104Z	CHIP C	0.10UF	Z	
C89			CK73FB1H102K	CHIP C	1000PF	K	
C90			CK73FF1E104Z	CHIP C	0.10UF	Z	
C91			CK73FF1C105Z	CHIP C	1.0UF	Z	
C92			CC73FCH1H121J	CHIP C	120PF	J	
C93			CK73FF1C105Z	CHIP C	1.0UF	Z	
C94			CK73FB1H102K	CHIP C	1000PF	K	
C95			CK73FF1E104Z	CHIP C	0.10UF	Z	
C96			CK73FB1H102K	CHIP C	1000PF	K	
C97			CK73FF1E104Z	CHIP C	0.10UF	Z	
C98			CK73FF1C105Z	CHIP C	1.0UF	Z	
C99			CC73FCH1H820J	CHIP C	82PF	J	
C100			CK73FF1C105Z	CHIP C	1.0UF	Z	
C101			CK73FB1H102K	CHIP C	1000PF	K	
C102,103			CK73FF1E104Z	CHIP C	0.10UF	Z	
C105			CK73FF1C105Z	CHIP C	1.0UF	Z	
C106			CC73FCH1H040C	CHIP C	4.0PF	C	
C108			CC73FCH1H040C	CHIP C	4.0PF	C	
C110			CK73FF1C105Z	CHIP C	1.0UF	Z	

PARTS LIST

RF UNIT (X44-3210-00)

Ref. No.	Address	New parts	Parts No.	Description			Destination
C111			CK73FF1E104Z	CHIP C	0.10UF	Z	
C112			CC73FSL1H391J	CHIP C	390PF	J	
C113			CK73FF1E104Z	CHIP C	0.10UF	Z	
C114			CK73FF1C105Z	CHIP C	1.0UF	Z	
C115			CC73FCH1H680J	CHIP C	68PF	J	
C116			CK73FF1C105Z	CHIP C	1.0UF	Z	
C117			CC73FSL1H151J	CHIP C	150PF	J	
C118,119			CK73FF1E104Z	CHIP C	0.10UF	Z	
C121			CK73FF1C105Z	CHIP C	1.0UF	Z	
C122			CC73FCH1H050C	CHIP C	5.0PF	C	
C124			CC73FCH1H050C	CHIP C	5.0PF	C	
C126			CK73FF1C105Z	CHIP C	1.0UF	Z	
C127			CK73FF1E104Z	CHIP C	0.10UF	Z	
C128			CC73FCH1H221J	CHIP C	220PF	J	
C129			CK73FF1E104Z	CHIP C	0.10UF	Z	
C130			CK73FF1C105Z	CHIP C	1.0UF	Z	
C131			CC73FCH1H330J	CHIP C	33PF	J	
C132			CK73FF1C105Z	CHIP C	1.0UF	Z	
C133			CK73FF1E104Z	CHIP C	0.10UF	Z	
C134			CK73FB1H103K	CHIP C	0.010UF	K	
C135			CC73FCH1H121J	CHIP C	120PF	J	
C136			CK73FF1E104Z	CHIP C	0.10UF	Z	
C137			CC73FSL1H221J	CHIP C	220PF	J	
C138			CK73FB1E103K	CHIP C	0.010UF	K	
C139			CK73FF1E104Z	CHIP C	0.10UF	Z	
C140,141			CK73FB1E103K	CHIP C	0.010UF	K	
C142			CK73FF1E104Z	CHIP C	0.10UF	Z	
C143			CC73FCH1H390J	CHIP C	39PF	J	
C144,145			CK73FB1E103K	CHIP C	0.010UF	K	
C146,147			CK73FF1E104Z	CHIP C	0.10UF	Z	
C148			CK73FB1E103K	CHIP C	0.010UF	K	
C149			CK73FF1E104Z	CHIP C	0.10UF	Z	
C150,151			CK73FF1C105Z	CHIP C	1.0UF	Z	
C152,153			CK73FF1E104Z	CHIP C	0.10UF	Z	
C154			CC73FCH1H101J	CHIP C	100PF	J	
C155			CC73FCH1H150J	CHIP C	15PF	J	
C156			CK73FB1E103K	CHIP C	0.010UF	K	
C157			CC73FSL1H221J	CHIP C	220PF	J	
C158			CK73FB1H471K	CHIP C	470PF	K	
C159			CK73FB1H102K	CHIP C	1000PF	K	
C160			CC73FCH1H470J	CHIP C	47PF	J	
C161			CC73FCH1H820J	CHIP C	82PF	J	
C162			CK73FF1E104Z	CHIP C	0.10UF	Z	
C163			CK73FB1E103K	CHIP C	0.010UF	K	
C164			CC73FSL1H471J	CHIP C	470PF	J	
C165			CK73FB1E103K	CHIP C	0.010UF	K	
C166,167			CK73FF1E104Z	CHIP C	0.10UF	Z	
C168			CK73FB1E103K	CHIP C	0.010UF	K	
C169			CC73FCH1H680J	CHIP C	68PF	J	
C170			CK73FF1E104Z	CHIP C	0.10UF	Z	
C171			CC73FCH1H470J	CHIP C	47PF	J	
C172,173			CK73FB1E103K	CHIP C	0.010UF	K	
C174			CC73FSL1H471J	CHIP C	470PF	J	
C175			CC73FCH1H470J	CHIP C	47PF	J	
C176			CE04EW1C470M	ELECTRO	47UF	16WV	
C177			CC73FCH1H050C	CHIP C	5.0PF	C	
C178			CC73FCH1H680J	CHIP C	68PF	J	
C179			CK73FF1E104Z	CHIP C	0.10UF	Z	
C180			CC73FCH1H020C	CHIP C	2.0PF	C	

Ref. No.	Address	New parts	Parts No.	Description			Destination
C181			CC73FCH1H050C	CHIP C	5.0PF	C	
C182			CK73FB1E103K	CHIP C	0.010UF	K	
C184			CC73FCH1H050C	CHIP C	5.0PF	C	
C185			CC73FCH1H220J	CHIP C	22PF	J	
C186			CC73FCH1H050C	CHIP C	5.0PF	C	
C187			CC73FCH1H1R5C	CHIP C	1.5PF	C	
C188			CC73FCH1H220J	CHIP C	22PF	J	
C189			CC73FCH1H0R5C	CHIP C	0.5PF	C	
C190			CK73FB1E103K	CHIP C	0.010UF	K	
C191			CC73FSL1H681J	CHIP C	680PF	J	
C192,193			CK73FB1H102K	CHIP C	1000PF	K	
C194			CC73FSL1H331J	CHIP C	330PF	J	
C195			CC73FSL1H471J	CHIP C	470PF	J	
C196			CK73FB1H102K	CHIP C	1000PF	K	
C197			CK73FB1E103K	CHIP C	0.010UF	K	
C198			CC73FCH1H020C	CHIP C	2.0PF	C	
C199			CK73FB1E103K	CHIP C	0.010UF	K	
C201-206			CK73FB1E103K	CHIP C	0.010UF	K	
C207			CC73FCH1H470J	CHIP C	47PF	J	
C208			CK73FF1E104Z	CHIP C	0.10UF	Z	
C209			CK73FB1H102K	CHIP C	1000PF	K	
C211,212			CK73FF1E104Z	CHIP C	0.10UF	Z	
C214			CK73FB1E103K	CHIP C	0.010UF	K	
C215			CK73FF1E104Z	CHIP C	0.10UF	Z	
C216			CE04EW1C100M	ELECTRO	10UF	16WV	
C217			CK73FF1E104Z	CHIP C	0.10UF	Z	
C218			CC73FCH1H470J	CHIP C	47PF	J	
C219			CK73FF1E104Z	CHIP C	0.10UF	Z	
C220			CE04EW1H010M	ELECTRO	1.0UF	50WV	
C221-223			CK73FF1E104Z	CHIP C	0.10UF	Z	
C224			CK73FB1E103K	CHIP C	0.010UF	K	
C225			CK73FB1H102K	CHIP C	1000PF	K	
C226-228			CK73FB1E103K	CHIP C	0.010UF	K	
C229			CC73FCH1H050C	CHIP C	5.0PF	C	
C230			CK73FB1E103K	CHIP C	0.010UF	K	
C231			CC73FCH1H220J	CHIP C	22PF	J	
C232			CK73FF1E104Z	CHIP C	0.10UF	Z	
C233			CK73FB1H102K	CHIP C	1000PF	K	
C234			CK73FF1E104Z	CHIP C	0.10UF	Z	
C236			CK73FB1E103K	CHIP C	0.010UF	K	
C237			CC73FCH1H220J	CHIP C	22PF	J	
C238			CK73FB1E103K	CHIP C	0.010UF	K	
C239			CK73FB1H471K	CHIP C	470PF	K	
C240,241			CK73FB1E103K	CHIP C	0.010UF	K	
C242			CC73FSL1H471J	CHIP C	470PF	J	
C243,244			CK73FB1E103K	CHIP C	0.010UF	K	
C245			CC73FSL1H471J	CHIP C	470PF	J	
C246			CC73FCH1H010C	CHIP C	1.0PF	C	
C247			CC73FSL1H471J	CHIP C	470PF	J	
C248			CK73FB1E103K	CHIP C	0.010UF	K	
C249			CC73FCH1H0R5C	CHIP C	0.5PF	C	
C250			CC73FCH1H010C	CHIP C	1.0PF	C	
C251-253			CK73FB1E103K	CHIP C	0.010UF	K	
C254			CK73FF1E104Z	CHIP C	0.10UF	Z	
C256,257			CK73FB1E103K	CHIP C	0.010UF	K	
C260			CK73FB1E103K	CHIP C	0.010UF	K	
C262,263			CK73FB1E103K	CHIP C	0.010UF	K	
C265-273			CK73FB1E103K	CHIP C	0.010UF	K	
C274			CC73FCH1H180J	CHIP C	18PF	J	

PARTS LSIT

RF UNIT (X44-3210-00)

Ref. No.	Address	New parts	Parts No.	Description			Destination
C275			CC73FCH1H150J	CHIP C	15PF	J	
C276			CC73FCH1H180J	CHIP C	18PF	J	
C277-279			CK73FB1E103K	CHIP C	0.010UF	K	
C280			CC73FCH1H101J	CHIP C	100PF	J	
C281,282			CC73FCH1H220J	CHIP C	22PF	J	
C283			CC73FCH1H330J	CHIP C	33PF	J	
C285			CK73FB1E223K	CHIP C	0.022UF	K	
C286			CE04EW1H010M	ELECTRO	1.0UF	50WV	
C287			CE04EW1C100M	ELECTRO	10UF	16WV	
C288			CK73FB1H473K	CHIP C	0.047UF	K	
C289			CE04EW1C100M	ELECTRO	10UF	16WV	
C290			CK73FB1E103K	CHIP C	0.010UF	K	
C291			CE04EW1HR47M	ELECTRO	0.47UF	50WV	
C292			CK73FB1E103K	CHIP C	0.010UF	K	
C293			CC73FCH1H101J	CHIP C	100PF	J	
C294			CK73FF1E104Z	CHIP C	0.10UF	Z	
C295-298			CK73FB1E103K	CHIP C	0.010UF	K	
C299,300			CK73FB1H103K	CHIP C	0.010UF	K	
C301			CK73FB1H102K	CHIP C	1000PF	K	
C302			CK73FB1H103K	CHIP C	0.010UF	K	
C303			CK73FB1H102K	CHIP C	1000PF	K	
C304			CK45FE2H222P	CERAMIC	2200PF	P	
C305			CK73FB1H103K	CHIP C	0.010UF	K	
C306,307			CK73FB1H102K	CHIP C	1000PF	K	
C308			CK73FB1H103K	CHIP C	0.010UF	K	
C310			CK73FB1H103K	CHIP C	0.010UF	K	
C312			CE04EW1C100M	ELECTRO	10UF	16WV	
C313,314			CK73FB1H103K	CHIP C	0.010UF	K	
C315			CE04EW1C100M	ELECTRO	10UF	16WV	
C316-327			CK73FB1H102K	CHIP C	1000PF	K	
C328-331			CK73FB1E103K	CHIP C	0.010UF	K	
C332			CK73FB1H102K	CHIP C	1000PF	K	
C333			CK73FB1E103K	CHIP C	0.010UF	K	
C334			CC73FCH1H330J	CHIP C	33PF	J	
C335			CK73FB1E103K	CHIP C	0.010UF	K	
C338			CC73FSL1H221J	CHIP C	220PF	J	
C339,340			CC73FCH1H220J	CHIP C	22PF	J	
C341-346			CK73FB1E103K	CHIP C	0.010UF	K	
C347,348			CC73FCH1H100D	CHIP C	10PF	D	
C350			C92-0004-05	CHIP-TAN	1.0UF	16WV	
C500			CK73FB1E103K	CHIP C	0.010UF	K	
C501			CE04NW1C100M	ELECTRO	10UF	16WV	
C502			CK73FB1E103K	CHIP C	0.010UF	K	
C503			CE04NW1C100M	ELECTRO	10UF	16WV	
C504			CK73FB1E103K	CHIP C	0.010UF	K	
C505			CE04EW1C100M	ELECTRO	10UF	16WV	
C506			CK73FB1E103K	CHIP C	0.010UF	K	
C507			CE04NW1C100M	ELECTRO	10UF	16WV	
C508			CK73FB1E103K	CHIP C	0.010UF	K	
C509			CE04NW1C100M	ELECTRO	10UF	16WV	
C510			CK73FB1E103K	CHIP C	0.010UF	K	
C511			CE04EW1C100M	ELECTRO	10UF	16WV	
C512,513			CK73FB1E103K	CHIP C	0.010UF	K	
C514			C92-0516-05	CHIP-TAN	4.7UF	16WV	
C515			CC73FSL1H271J	CHIP C	270PF	J	
C516			CC73FSL1H561J	CHIP C	560PF	J	
C517			CK73FB1E103K	CHIP C	0.010UF	K	
C518			CC73FSL1H271J	CHIP C	270PF	J	
C519,520			CK73FB1E103K	CHIP C	0.010UF	K	

Ref. No.	Address	New parts	Parts No.	Description			Destination
C521			CE04EW1C100M	ELECTRO	10UF	16WV	
C522			CK73FB1E103K	CHIP C	0.010UF	K	
C523			CC73FCH1H121J	CHIP C	120PF	J	
C524			CC73FSL1H181J	CHIP C	180PF	J	
C525			CC73FCH1H121J	CHIP C	120PF	J	
C526-530			CK73FB1E103K	CHIP C	0.010UF	K	
C531			CC73FCH1H560J	CHIP C	56PF	J	
C532			CC73FSL1H391J	CHIP C	390PF	J	
C533			CC73FCH1H390J	CHIP C	39PF	J	
C534			CC73FCH1H680J	CHIP C	68PF	J	
C535			CC73FCH1H390J	CHIP C	39PF	J	
C536			CC73FCH1H101J	CHIP C	100PF	J	
C537			CC73FCH1H680J	CHIP C	68PF	J	
C538			CC73FCH1H390J	CHIP C	39PF	J	
C539			CC73FCH1H070D	CHIP C	7.0PF	D	
C540			CC73FCH1H680J	CHIP C	68PF	J	
C541			CC73FCH1H220J	CHIP C	22PF	J	
C542			CC73FCH1H330J	CHIP C	33PF	J	
C543-545			CK73FB1E103K	CHIP C	0.010UF	K	
C546			CC73FCH1H121J	CHIP C	120PF	J	
C547			CE04EW1C470M	ELECTRO	47UF	16WV	
C548-555			CK73FB1E103K	CHIP C	0.010UF	K	
C556			CK73FB1H102K	CHIP C	1000PF	K	
C557			CC73FCH1H330J	CHIP C	33PF	J	
C558			CC73FCH1H0R5C	CHIP C	0.5PF	C	
C560			CC73FCH1H0R5C	CHIP C	0.5PF	C	
C561			CC73FCH1H330J	CHIP C	33PF	J	
C562-564			CK73FB1E103K	CHIP C	0.010UF	K	
C565			C92-0516-05	CHIP-TAN	4.7UF	16WV	
C566,567			CC73FCH1H470J	CHIP C	47PF	J	
C568			CC73FCH1H101J	CHIP C	100PF	J	
C569			CE04EW1C100M	ELECTRO	10UF	16WV	
C570,571			CK73FB1E103K	CHIP C	0.010UF	K	
C572			CC73FCH1H100D	CHIP C	10PF	D	
C573			CC73FCH1H050C	CHIP C	5.0PF	C	
C574-576			CK73FB1E103K	CHIP C	0.010UF	K	
C577			CK73FB1H331K	CHIP C	330PF	K	
C578			CC73FCH1H620J	CHIP C	62PF	J	
C579			CK73FB1H331K	CHIP C	330PF	K	
C581			CC73FCH1H820J	CHIP C	82PF	J	
C583			CK73FB1H103K	CHIP C	0.010UF	K	
C584			CE04EW1C100M	ELECTRO	10UF	16WV	
C585			CK73FB1H103K	CHIP C	0.010UF	K	
C586			CK73FB1H682K	CHIP C	6800PF	K	
C587			CK73FB1H123K	CHIP C	0.012UF	K	
C588			CK73FB1H682K	CHIP C	6800PF	K	
C591			CK73FB1H103K	CHIP C	0.010UF	K	
C593			CK73FB1H102K	CHIP C	1000PF	K	
C594			CC73FSL1H221J	CHIP C	220PF	J	
C595			CK73FB1H103K	CHIP C	0.010UF	K	
C596			CC73FCH1H0R5C	CHIP C	0.5PF	C	
C597			CC73FCH1H270J	CHIP C	27PF	J	
C598-602			CK73FB1H103K	CHIP C	0.010UF	K	
C603			CK73FB1H102K	CHIP C	1000PF	K	
C604			CK73FB1H103K	CHIP C	0.010UF	K	
C606			CC73FCH1H270J	CHIP C	27PF	J	
C618			CE04EW1C101M	ELECTRO	100UF	16WV	
C619			C92-0001-05	CHIP-TAN	0.10UF	35WV	
C620-623			CK73FB1H102K	CHIP C	1000PF	K	

PARTS LIST

RF UNIT (X44-3210-00)

Ref. No.	Address	New parts	Parts No.	Description			Destination
C624			CK73FB1E103K	CHIP C	0.010UF	K	
C625-628			CK73FB1H102K	CHIP C	1000PF	K	
C629			CE04EW1C101M	ELECTRO	100UF	16WV	
C630,631			CK73FB1E103K	CHIP C	0.010UF	K	
C630,631			CK73FB1E103K	CHIP C	0.010UF	K	
C632			CE04EW1C101M	ELECTRO	100UF	16WV	
C633			CC73FCH1H101J	CHIP C	100PF	J	
C634			CC73FCH1H180J	CHIP C	18PF	J	
C635			CK73FB1H102K	CHIP C	1000PF	K	
C636			CC73FCH1H330J	CHIP C	33PF	J	
C637			CC73FCH1H080D	CHIP C	8.0PF	D	
C638			CC73FCH1H120J	CHIP C	12PF	J	
C639			CC73FCH1H560J	CHIP C	56PF	J	
C640			CK73FB1H183K	CHIP C	0.018UF	K	
C641			CC73FCH1H120J	CHIP C	12PF	J	
C642			CK73FB1H102K	CHIP C	1000PF	K	
C643			CC73FCH1H330J	CHIP C	33PF	J	
C644			CC73FCH1H120J	CHIP C	12PF	J	
C645			CC73FCH1H150J	CHIP C	15PF	J	
C646			CC73FCH1H390J	CHIP C	39PF	J	
C647			CC73FCH1H100D	CHIP C	10PF	D	
C648			CK73FB1H102K	CHIP C	1000PF	K	
C649			CC73FCH1H160J	CHIP C	16PF	J	
C650			CC73FCH1H240J	CHIP C	24PF	J	
C651			CC73FCH1H150J	CHIP C	15PF	J	
C652			CC73FCH1H390J	CHIP C	39PF	J	
C653			CK73FB1H183K	CHIP C	0.018UF	K	
C654			CC73FCH1H040C	CHIP C	4.0PF	C	
C655			CK73FB1H102K	CHIP C	1000PF	K	
C656			CC73FCH1H150J	CHIP C	15PF	J	
C657			CC73FCH1H200J	CHIP C	20PF	J	
C658			CC73FCH1H160J	CHIP C	16PF	J	
C659,660			CK73FB1H102K	CHIP C	1000PF	K	
C661-			CC73FCH1H100D	CHIP C	10PF	D	
C662			CC73FCH1H030C	CHIP C	3.0PF	C	
C663			CC73FCH1H020C	CHIP C	2.0PF	C	
C664			CC73FCH1H040C	CHIP C	4.0PF	C	
C665,666			CK73FB1H102K	CHIP C	1000PF	K	
C667			CK73FB1E103K	CHIP C	0.010UF	K	
C668			CK73FB1H102K	CHIP C	1000PF	K	
C669			CK73FB1E103K	CHIP C	0.010UF	K	
C670			CK73FB1H102K	CHIP C	1000PF	K	
C671			CC73FCH1H240J	CHIP C	24PF	J	
C672			CK73FB1H102K	CHIP C	1000PF	K	
C673			CC73FCH1H010C	CHIP C	1.0PF	C	
C674			CC73FCH1H240J	CHIP C	24PF	J	
C675			CK73FB1E103K	CHIP C	0.010UF	K	
C676			C92-0004-05	CHIP-TAN	1.0UF	16WV	
C677			CE04EW1C221M	ELECTRO	220UF	16WV	
C678			CK73FB1E103K	CHIP C	0.010UF	K	
C679			CQ92M1H822K	MYLAR	8200PF	K	
C680			C91-1083-05	FILM	0.47UF	63WV	
C681			CK73FB1H102K	CHIP C	1000PF	K	
C682,683			CK73FB1E103K	CHIP C	0.010UF	K	
C684			CK73FB1H103K	CHIP C	0.010UF	K	
C685,686			CK73FB1E103K	CHIP C	0.010UF	K	
C687			CC73FCH1H020C	CHIP C	2.0PF	C	
C688			CC73FCH1H1R5C	CHIP C	1.5PF	C	
C689			CC73FCH1H030C	CHIP C	3.0PF	C	

Ref. No.	Address	New parts	Parts No.	Description			Destination
C690			CC73FCH1H470J	CHIP C	47PF	J	
C691			CC73FCH1H270J	CHIP C	27PF	J	
C692-696			CK73FB1E103K	CHIP C	0.010UF	K	
C697			CE04EW1C100M	ELECTRO	10UF	16WV	
C698			CK73FB1H102K	CHIP C	1000PF	K	
C699			CK73FB1E103K	CHIP C	0.010UF	K	
C700			CK73FB1H102K	CHIP C	1000PF	K	
C701			CC73FCH1H330J	CHIP C	33PF	J	
C702			CC73FCH1H100D	CHIP C	10PF	D	
C703			CC73FCH1H680J	CHIP C	68PF	J	
C704,705			CK73FB1H103K	CHIP C	0.010UF	K	
C706			CE04EW1C470M	ELECTRO	47UF	16WV	
C707			CK73FB1H103K	CHIP C	0.010UF	K	
C708			CE04EW1C101M	ELECTRO	100UF	16WV	
C710			CK73FB1H102K	CHIP C	1000PF	K	
C711			CQ92M1H333K	MYLAR	0.033UF	K	
C712			C91-1083-05	FILM	0.47UF	63WV	
C713			CK73FB1H103K	CHIP C	0.010UF	K	
C714			C92-0516-05	CHIP-TAN	4.7UF	16WV	
C715,716			CK73FB1H102K	CHIP C	1000PF	K	
C717			CE04EW1C101M	ELECTRO	100UF	16WV	
C719			CC73FCH1H020C	CHIP C	2.0PF	C	
C721-726			CC73FCH1H270J	CHIP C	27PF	J	
C727,728			CC73FCH1H100D	CHIP C	10PF	D	
C729			CC73FCH1H020C	CHIP C	2.0PF	C	
C730-732			CK73FB1H102K	CHIP C	1000PF	K	
C744			CK73FB1H102K	CHIP C	1000PF	K	
C750-757			CC73FCH1H101J	CHIP C	100PF	J	
C758-761			CK73FB1H102K	CHIP C	1000PF	K	
C762			CC73FCH1H101J	CHIP C	100PF	J	
C770			CE04EW1C470M	ELECTRO	47UF	16WV	
C771			CK73FB1H103K	CHIP C	0.010UF	K	
C780			CE04EW1E470M	ELECTRO	47UF	25WV	
C781,782			CK73FF1E104Z	CHIP C	0.10UF	Z	
C783			CE04EW1C470M	ELECTRO	47UF	16WV	
C784			CE04EW1E470M	ELECTRO	47UF	25WV	
C785,786			CK73FF1E104Z	CHIP C	0.10UF	Z	
C787			CE04EW1C470M	ELECTRO	47UF	16WV	
C800			CC73FCH1H390J	CHIP C	39PF	J	
C801			CC73FCH1H151J	CHIP C	150PF	J	
C802			CC73FCH1H390J	CHIP C	39PF	J	
C803			CC73FCH1H050C	CHIP C	5.0PF	C	
C804			CK73FB1H103K	CHIP C	0.010UF	K	
C805			CC73FCH1H020C	CHIP C	2.0PF	C	
C806,807			CK73FB1H103K	CHIP C	0.010UF	K	
C808			C92-0004-05	CHIP-TAN	1.0UF	16WV	
C907-912			CK73FB1H102K	CHIP C	1000PF	K	
C914-926			CK73FB1H102K	CHIP C	1000PF	K	
TC506,507			C05-0377-05	TRIMMER CAPACITOR		10PF	
TC508,509			C05-0376-05	TRIMMER CAPACITOR		6PF	
TC800			C05-0344-05	TRIMMER CAPACITOR		30PF	
CN2			E04-0154-05	RF COAXIAL CABLE SOCKET			
CN4			E04-0154-05	RF COAXIAL CABLE SOCKET			
CN5,6			E04-0191-05	RF COAXIAL CABLE SOCKET			
CN7			E40-3238-05	PIN CONNECTOR (3P)			
CN10			E04-0154-05	RF COAXIAL CABLE SOCKET			
CN13		*	E40-5741-05	PIN CONNECTOR (8P)			
CN14		*	E40-5740-05	PIN CONNECTOR (20P)			

PARTS LSIT

RF UNIT (X44-3210-00)

Ref. No.	Address	New parts	Parts No.	Description	Destination
CN15-17			E04-0154-05	RF COAXIAL CABLE SOCKET	
CN500		*	E40-5740-05	PIN CONNECTOR (20P)	
CN501			E40-3237-05	PIN CONNECTOR (2P)	
CN502-505			E04-0154-05	RF COAXIAL CABLE SOCKET (2P)	
CN506			E40-3238-05	PIN CONNECTOR (3P)	
CN508			E40-5606-05	PIN CONNECTOR (3P)	
CN509			E40-5607-05	PIN CONNECTOR (4P)	
CN510			E23-0996-05	TERMINAL (TEST)	
CN800			E40-4463-05	PIN CONNECTOR	
CN801			E40-4464-05	PIN CONNECTOR	
CN901			E40-3300-05	PIN CONNECTOR (3P)	
CN903-907		*	E40-5743-05	FLAT CABLE CONNECTOR (6P)	
J1			E06-0752-05	DIN SOCKET	
J2,3			E13-0166-05	PIN JACK	
J901		*	E11-0462-05	PHONE JACK	
W1		*	E37-0546-05	LEAD WIRE WITH CONNECTOR	
W2		*	E37-0517-05	LEAD WIRE WITH MINIPIN PLUG	
101	2F		F11-1141-04	SHIELDING COVER	
A502	2F		F11-1140-04	SHIELDING CASE	
–			J30-0545-05	SPACER (TO XF1)	
–			J30-0563-05	SPACER (TO XF3, X800)	
CF500,501			L72-0343-05	CERAMIC FILTER (8.4MHZ)	
L1		*	L39-1254-05	COIL	
L2			L19-0324-05	TROIDAL COIL	
L3			L40-1021-14	SMALL FIXED INDUCTOR	
L7			L40-2701-14	SMALL FIXED INDUCTOR	
L8			L40-4791-14	SMALL FIXED INDUCTOR	
L9			L40-2701-14	SMALL FIXED INDUCTOR	
L10			L40-1015-48	SMALL FIXED INDUCTOR (100UH)	
L11			L19-0324-05	TROIDAL COIL	
L12			L40-1005-48	SMALL FIXED INDUCTOR (10UH)	
L13			L40-4705-48	SMALL FIXED INDUCTOR (47UH)	
L14,15			L40-1501-14	SMALL FIXED INDUCTOR	
L16			L40-1021-14	SMALL FIXED INDUCTOR	
L17,18			L40-5691-14	SMALL FIXED INDUCTOR	
L19			L40-1292-14	SMALL FIXED INDUCTOR	
L20			L40-8291-14	SMALL FIXED INDUCTOR	
L21,22			L40-1292-14	SMALL FIXED INDUCTOR	
L23			L40-5691-14	SMALL FIXED INDUCTOR	
L24			L40-1292-14	SMALL FIXED INDUCTOR	
L25			L40-1092-14	SMALL FIXED INDUCTOR	
L26			L40-3391-14	SMALL FIXED INDUCTOR	
L27			L40-1092-14	SMALL FIXED INDUCTOR	
L28-31			L34-4262-05	COIL	
L32			L40-3382-14	SMALL FIXED INDUCTOR	
L33			L40-2792-14	SMALL FIXED INDUCTOR	
L34			L40-3382-14	SMALL FIXED INDUCTOR	
L35			L40-2282-14	SMALL FIXED INDUCTOR	
L36			L40-2292-14	SMALL FIXED INDUCTOR	
L37			L40-2282-14	SMALL FIXED INDUCTOR	
L38-40			L34-4289-05	COIL	
L41			L40-2282-14	SMALL FIXED INDUCTOR	
L42			L40-1292-14	SMALL FIXED INDUCTOR	
L43			L40-2282-14	SMALL FIXED INDUCTOR	
L44-46		*	L34-4392-05	COIL	
L47			L40-2282-14	SMALL FIXED INDUCTOR	
L48			L40-1292-14	SMALL FIXED INDUCTOR	
L49			L40-2282-14	SMALL FIXED INDUCTOR	
L50			L34-4264-05	COIL	
L51			L40-1021-14	SMALL FIXED INDUCTOR	
L52			L34-4265-05	COIL	
L53			L19-0324-05	TROIDAL COIL	
L54			L40-4785-48	SMALL FIXED INDUCTOR (470NH)	
L55			L19-0324-05	TROIDAL COIL	
L56			L40-4705-48	SMALL FIXED INDUCTOR (47UH)	
L57			L40-2785-48	SMALL FIXED INDUCTOR (270NH)	
L58			L40-2285-48	SMALL FIXED INDUCTOR (220NH)	
L59			L19-0324-05	TROIDAL COIL	
L60			L39-1255-05	COIL	
L61			L40-1285-48	SMALL FIXED INDUCTOR (120NH)	
L62			L39-1255-05	COIL	
L63			L40-1015-48	SMALL FIXED INDUCTOR (100NH)	
L64			L39-1255-05	COIL	
L65			L34-4222-05	COIL	
L67		*	L34-4394-05	COIL	
L68			L40-1015-48	SMALL FIXED INDUCTOR (100UH)	
L69			L40-2285-48	SMALL FIXED INDUCTOR (220NH)	
L70		*	L34-4393-05	COIL	
L71			L40-3395-48	SMALL FIXED INDUCTOR (3.3UH)	
L72		*	L34-4394-05	COIL	
L73			L40-2295-48	SMALL FIXED INDUCTOR (2.2UH)	
L74			L40-2285-48	SMALL FIXED INDUCTOR (220NH)	
L75			L34-4209-05	COIL	
L76			L40-3395-48	SMALL FIXED INDUCTOR (3.3UH)	
L77			L34-0943-05	COIL	
L78			L40-4785-48	SMALL FIXED INDUCTOR (470NH)	
L79			L40-3395-48	SMALL FIXED INDUCTOR (3.3UH)	
L81			L34-0535-05	COIL	
L82			L34-0536-05	COIL	
L83,84			L40-1015-48	SMALL FIXED INDUCTOR (100UH)	
L86			L40-2285-48	SMALL FIXED INDUCTOR (220NH)	
L87			L40-4705-48	SMALL FIXED INDUCTOR (47UH)	
L88			L19-0324-05	TROIDAL COIL	
L89		*	L34-4395-05	COIL	
L90			L39-1255-05	COIL	
L91		*	L34-4395-05	COIL	
L92			L34-4211-05	COIL	
L93			L40-1015-48	SMALL FIXED INDUCTOR (100UH)	
L94		*	L34-4395-05	COIL	
L95			L34-4207-05	COIL	
L98			L34-0943-05	COIL	
L99			L34-0781-05	COIL	
L100			L34-0536-05	COIL	
L101			L40-4705-48	SMALL FIXED INDUCTOR (47UH)	
L102			L40-3395-48	SMALL FIXED INDUCTOR (3.3UH)	
L107			L40-1015-48	SMALL FIXED INDUCTOR (100UH)	
L108			L40-1005-48	SMALL FIXED INDUCTOR (10UH)	
L110,111		*	L40-1805-48	SMALL FIXED INDUCTOR (18UH)	
L112,113		*	L40-1081-42	SMALL FIXED INDUCTOR (0.1UH)	
L301		*	L40-1001-42	SMALL FIXED INDUCTOR (10UH)	
L304-310		*	L40-1001-42	SMALL FIXED INDUCTOR (10UH)	
L314-318		*	L40-1001-42	SMALL FIXED INDUCTOR (10UH)	
L500-505			L40-1005-48	SMALL FIXED INDUCTOR (10UH)	
L506,507		*	L40-6805-48	SMALL FIXED INDUCTOR (68UH)	
L508			L40-1005-48	SMALL FIXED INDUCTOR (10UH)	
L509,510		*	L40-2705-48	SMALL FIXED INDUCTOR (27UH)	

PARTS LIST

RF UNIT (X44-3210-00)

Ref. No.	Address	New parts	Parts No.	Description	Destination
L511		*	L40-1805-48	SMALL FIXED INDUCTOR (18UH)	
L512,513		*	L40-2705-48	SMALL FIXED INDUCTOR (27UH)	
L514			L40-2205-48	SMALL FIXED INDUCTOR (22UH)	
L515		*	L40-1805-48	SMALL FIXED INDUCTOR (18UH)	
L516			L40-5695-48	SMALL FIXED INDUCTOR (5.6UH)	
L517			L40-1005-48	SMALL FIXED INDUCTOR (10UH)	
L518			L34-4222-05	COIL	
L519		*	L34-4421-05	COIL	
L520			L34-4222-05	COIL	
L521,522			L40-2285-48	SMALL FIXED INDUCTOR (220NH)	
L523			L40-1005-48	SMALL FIXED INDUCTOR (10UH)	
L524			L40-1095-48	SMALL FIXED INDUCTOR (1UH)	
L525,526			L40-2205-48	SMALL FIXED INDUCTOR (22UH)	
L528		*	L34-4396-05	COIL	
L529,530			L34-4222-05	COIL	
L531-534			L40-1015-48	SMALL FIXED INDUCTOR (100UH)	
L535			L33-0664-05	CHOKE COIL	
L536			L34-2354-05	COIL	
L537			L40-4795-48	SMALL FIXED INDUCTOR (4.7UH)	
L538			L33-0664-05	CHOKE COIL	
L539			L34-2354-05	COIL	
L540			L40-4795-48	SMALL FIXED INDUCTOR (4.7UH)	
L541			L33-0664-05	CHOKE COIL	
L542			L34-2354-05	COIL	
L543			L40-4795-48	SMALL FIXED INDUCTOR (4.7UH)	
L544			L33-0664-05	CHOKE COIL	
L545			L34-2354-05	COIL	
L546			L40-4795-48	SMALL FIXED INDUCTOR (4.7UH)	
L547			L40-3385-48	SMALL FIXED INDUCTOR (330NH)	
L548			L40-1295-48	SMALL FIXED INDUCTOR (1.2UH)	
L549			L40-3385-48	SMALL FIXED INDUCTOR (330NH)	
L550			L40-2285-48	SMALL FIXED INDUCTOR (220NH)	
L551			L40-1015-48	SMALL FIXED INDUCTOR (100NH)	
L552		*	L40-2795-48	SMALL FIXED INDUCTOR (2.7UH)	
L553			L40-1595-48	SMALL FIXED INDUCTOR (1.5UH)	
L554			L40-2295-48	SMALL FIXED INDUCTOR (2.2UH)	
L555			L40-3395-48	SMALL FIXED INDUCTOR (3.3UH)	
L556			L40-2285-48	SMALL FIXED INDUCTOR (220NH)	
L557-559			L40-1015-48	SMALL FIXED INDUCTOR (100UH)	
L580,581			L40-1005-48	SMALL FIXED INDUCTOR (10UH)	
L601			L40-3395-48	SMALL FIXED INDUCTOR (3.3UH)	
L603			L40-2785-48	SMALL FIXED INDUCTOR (270NH)	
L604			L40-1015-48	SMALL FIXED INDUCTOR (100UH)	
X800			L77-1521-15	CRYSTAL RESONATOR (20MHZ)	
XF1			L71-0401-05	CRYSTAL FILTER (73.05MHZ)	
XF2			L71-0235-05	CRYSTAL FILTER	
XF3	—		L71-0266-05	CRYSTAL FILTER (8830KHZ)	
Q	2F		N38-2640-46	PAN HEAD MACHINE SCREW	
CP500-505			R90-0721-05	MULTI-COMP 4.7K X 16	
R1			RD14BB2E470J	RD 47 J 1/4W	
R2			RD14BB2E151J	RD 150 J 1/4W	
R3			RK73FB2A101J	CHIP R 100 J 1/10W	
R5			RD14BB2E101J	RD 100 J 1/4W	
R7			RD14BB2E820J	RD 82 J 1/4W	
R9			RK73FB2A221J	CHIP R 220 J 1/10W	
R10			RK73FB2A181J	CHIP R 180 J 1/10W	
R11,12			RK73FB2A331J	CHIP R 330 J 1/10W	
R13			RK73FB2A470J	CHIP R 47 J 1/10W	

Ref. No.	Address	New parts	Parts No.	Description	Destination
R14			RK73FB2A222J	CHIP R 2.2K J 1/10W	
R18			RK73FB2A103J	CHIP R 10K J 1/10W	
R19			RK73FB2A330J	CHIP R 33 J 1/10W	
R20			RK73FB2A102J	CHIP R 1.0K J 1/10W	
R21,22			RK73FB2A330J	CHIP R 33 J 1/10W	
R23			RK73FB2A101J	CHIP R 100 J 1/10W	
R24			RK73FB2A222J	CHIP R 2.2K J 1/10W	
R25			RK73FB2A561J	CHIP R 560 J 1/10W	
R27			RK73FB2A181J	CHIP R 180 J 1/10W	
R28			RK73FB2A680J	CHIP R 68 J 1/10W	
R31			RK73FB2A103J	CHIP R 10K J 1/10W	
R44-55			RK73FB2A223J	CHIP R 22K J 1/10W	
R56			RK73FB2A121J	CHIP R 120 J 1/10W	
R58			RK73FB2A680J	CHIP R 68 J 1/10W	
R59,60			RK73FB2A560J	CHIP R 56 J 1/10W	
R61			RK73FB2A680J	CHIP R 68 J 1/10W	
R62			RK73FB2A220J	CHIP R 22 J 1/10W	
R63			RK73FB2A121J	CHIP R 120 J 1/10W	
R65			RK73FB2A220J	CHIP R 22 J 1/10W	
R66			RK73FB2A121J	CHIP R 120 J 1/10W	
R68			RK73FB2A220J	CHIP R 22 J 1/10W	
R69			RK73FB2A121J	CHIP R 120 J 1/10W	
R71			RK73FB2A220J	CHIP R 22 J 1/10W	
R72			RK73FB2A121J	CHIP R 120 J 1/10W	
R74			RK73FB2A220J	CHIP R 22 J 1/10W	
R75			RK73FB2A121J	CHIP R 120 J 1/10W	
R77			RK73FB2A220J	CHIP R 22 J 1/10W	
R78			RK73FB2A121J	CHIP R 120 J 1/10W	
R80			RK73FB2A220J	CHIP R 22 J 1/10W	
R81			RK73FB2A121J	CHIP R 120 J 1/10W	
R83			RK73FB2A220J	CHIP R 22 J 1/10W	
R84			RK73FB2A121J	CHIP R 120 J 1/10W	
R86			RK73FB2A220J	CHIP R 22 J 1/10W	
R87			RK73FB2A121J	CHIP R 120 J 1/10W	
R89			RK73FB2A220J	CHIP R 22 J 1/10W	
R90			RK73FB2A121J	CHIP R 120 J 1/10W	
R92			RK73FB2A151J	CHIP R 150 J 1/10W	
R93			RK73FB2A223J	CHIP R 22K J 1/10W	
R94			RK73FB2A104J	CHIP R 100K J 1/10W	
R95			RK73FB2A393J	CHIP R 39K J 1/10W	
R96,97			RK73FB2A330J	CHIP R 33 J 1/10W	
R98			RK73FB2A473J	CHIP R 47K J 1/10W	
R99			RK73FB2A151J	CHIP R 150 J 1/10W	
R100			RK73FB2A331J	CHIP R 330 J 1/10W	
R101			RK73FB2A221J	CHIP R 220 J 1/10W	
R102			RK73FB2A101J	CHIP R 100 J 1/10W	
R103			RK73FB2A473J	CHIP R 47K J 1/10W	
R104,105			RK73FB2A151J	CHIP R 150 J 1/10W	
R106			RK73FB2A152J	CHIP R 1.5K J 1/10W	
R107			RK73FB2A680J	CHIP R 68 J 1/10W	
R108			RK73FB2A220J	CHIP R 22 J 1/10W	
R109			RK73FB2A100J	CHIP R 10 J 1/10W	
R110			RK73FB2A151J	CHIP R 150 J 1/10W	
R111			RK73FB2A471J	CHIP R 470 J 1/10W	
R112			RK73FB2A102J	CHIP R 1.0K J 1/10W	
R113			RK73FB2A471J	CHIP R 470 J 1/10W	
R114			RK73FB2A562J	CHIP R 5.6K J 1/10W	
R115			RK73FB2A220J	CHIP R 22 J 1/10W	
R116			RK73FB2A150J	CHIP R 15 J 1/10W	

PARTS LSIT

RF UNIT (X44-3210-00)

Ref. No.	Address	New parts	Parts No.	Description			Destination
R117			RK73FB2A471J	CHIP R	470	J 1/10W	
R118			RK73FB2A680J	CHIP R	68	J 1/10W	
R119,120			RK73FB2A331J	CHIP R	330	J 1/10W	
R121			RK73FB2A102J	CHIP R	1.0K	J 1/10W	
R122,123			RK73FB2A100J	CHIP R	10	J 1/10W	
R124			RK73FB2A471J	CHIP R	470	J 1/10W	
R125,126			RK73FB2A100J	CHIP R	10	J 1/10W	
R127			RK73FB2A180J	CHIP R	18	J 1/10W	
R128			RK73FB2A331J	CHIP R	330	J 1/10W	
R130			RK73FB2A331J	CHIP R	330	J 1/10W	
R131			RK73FB2A101J	CHIP R	100	J 1/10W	
R132			RK73FB2A223J	CHIP R	22K	J 1/10W	
R133			RK73FB2A333J	CHIP R	33K	J 1/10W	
R134			RK73FB2A122J	CHIP R	1.2K	J 1/10W	
R139			RK73FB2A104J	CHIP R	100K	J 1/10W	
R140			RK73FB2A473J	CHIP R	47K	J 1/10W	
R142			RK73FB2A473J	CHIP R	47K	J 1/10W	
R143			RK73FB2A471J	CHIP R	470	J 1/10W	
R144			RK73FB2A221J	CHIP R	220	J 1/10W	
R145			RK73FB2A330J	CHIP R	33	J 1/10W	
R146			RK73FB2A471J	CHIP R	470	J 1/10W	
R147			RK73FB2A562J	CHIP R	5.6K	J 1/10W	
R148			RK73FB2A223J	CHIP R	22K	J 1/10W	
R150			RK73FB2A181J	CHIP R	180	J 1/10W	
R154			RK73FB2A471J	CHIP R	470	J 1/10W	
R156			RK73FB2A330J	CHIP R	33	J 1/10W	
R157			RK73FB2A182J	CHIP R	1.8K	J 1/10W	
R158			RK73FB2A330J	CHIP R	33	J 1/10W	
R159			RK73FB2A101J	CHIP R	100	J 1/10W	
R160,161			RK73FB2A222J	CHIP R	2.2K	J 1/10W	
R162			RK73FB2A101J	CHIP R	100	J 1/10W	
R163			RK73FB2A332J	CHIP R	3.3K	J 1/10W	
R164			RK73FB2A152J	CHIP R	1.5K	J 1/10W	
R165			RK73FB2A473J	CHIP R	47K	J 1/10W	
R166			RK73FB2A222J	CHIP R	2.2K	J 1/10W	
R167			RK73FB2A101J	CHIP R	100	J 1/10W	
R168			RK73FB2A393J	CHIP R	39K	J 1/10W	
R169			RK73FB2A102J	CHIP R	1.0K	J 1/10W	
R170			RK73FB2A223J	CHIP R	22K	J 1/10W	
R171,172			RK73FB2A101J	CHIP R	100	J 1/10W	
R173			RK73FB2A393J	CHIP R	39K	J 1/10W	
R174			RK73FB2A223J	CHIP R	22K	J 1/10W	
R175			RK73FB2A102J	CHIP R	1.0K	J 1/10W	
R176			RK73FB2A103J	CHIP R	10K	J 1/10W	
R177			RK73FB2A153J	CHIP R	15K	J 1/10W	
R178			RK73FB2A563J	CHIP R	56K	J 1/10W	
R179			RK73FB2A103J	CHIP R	10K	J 1/10W	
R180			RK73FB2A104J	CHIP R	100K	J 1/10W	
R181			RK73FB2A222J	CHIP R	2.2K	J 1/10W	
R182			RK73FB2A103J	CHIP R	10K	J 1/10W	
R183			RK73FB2A470J	CHIP R	47	J 1/10W	
R184			RK73FB2A121J	CHIP R	120	J 1/10W	
R185			RK73FB2A103J	CHIP R	10K	J 1/10W	
R186			RK73FB2A562J	CHIP R	5.6K	J 1/10W	
R188			RK73FB2A470J	CHIP R	47	J 1/10W	
R189			RK73FB2A152J	CHIP R	1.5K	J 1/10W	
R190			RK73FB2A103J	CHIP R	10K	J 1/10W	
R191			RK73FB2A151J	CHIP R	150	J 1/10W	
R192			RK73FB2A102J	CHIP R	1.0K	J 1/10W	

Ref. No.	Address	New parts	Parts No.	Description			Destination
R195,196			RK73FB2A330J	CHIP R	33	J 1/10W	
R197			RK73FB2A273J	CHIP R	27K	J 1/10W	
R198			RK73FB2A103J	CHIP R	10K	J 1/10W	
R199,200			RK73FB2A221J	CHIP R	220	J 1/10W	
R201			RK73FB2A473J	CHIP R	47K	J 1/10W	
R202,203			RK73FB2A680J	CHIP R	68	J 1/10W	
R204			RK73FB2A101J	CHIP R	100	J 1/10W	
R205,206			RK73FB2A471J	CHIP R	470	J 1/10W	
R207,208			RK73FB2A330J	CHIP R	33	J 1/10W	
R209			RK73FB2A471J	CHIP R	470	J 1/10W	
R210			RK73FB2A102J	CHIP R	1.0K	J 1/10W	
R211			RK73FB2A472J	CHIP R	4.7K	J 1/10W	
R212,213			RK73FB2A330J	CHIP R	33	J 1/10W	
R214			RK73FB2A103J	CHIP R	10K	J 1/10W	
R215			RK73FB2A823J	CHIP R	82K	J 1/10W	
R216			RK73FB2A681J	CHIP R	680	J 1/10W	
R217			RK73FB2A151J	CHIP R	150	J 1/10W	
R218			RK73FB2A332J	CHIP R	3.3K	J 1/10W	
R219			RK73FB2A103J	CHIP R	10K	J 1/10W	
R220			RK73FB2A101J	CHIP R	100	J 1/10W	
R221			RK73FB2A102J	CHIP R	1.0K	J 1/10W	
R222			RK73FB2A103J	CHIP R	10K	J 1/10W	
R223			RK73FB2A392J	CHIP R	3.9K	J 1/10W	
R224			RK73FB2A332J	CHIP R	3.3K	J 1/10W	
R225			RK73FB2A223J	CHIP R	22K	J 1/10W	
R226			RK73FB2A562J	CHIP R	5.6K	J 1/10W	
R229			RK73FB2A103J	CHIP R	10K	J 1/10W	
R230			RK73FB2A152J	CHIP R	1.5K	J 1/10W	
R231,232			RK73FB2A221J	CHIP R	220	J 1/10W	
R233			RK73FB2A152J	CHIP R	1.5K	J 1/10W	
R234			RK73FB2A101J	CHIP R	100	J 1/10W	
R235			RK73FB2A152J	CHIP R	1.5K	J 1/10W	
R236,237			RK73FB2A101J	CHIP R	100	J 1/10W	
R238			RK73FB2A152J	CHIP R	1.5K	J 1/10W	
R239			RK73FB2A101J	CHIP R	100	J 1/10W	
R240			RK73FB2A152J	CHIP R	1.5K	J 1/10W	
R241,242			RK73FB2A331J	CHIP R	330	J 1/10W	
R243			RK73FB2A152J	CHIP R	1.5K	J 1/10W	
R244			RK73FB2A101J	CHIP R	100	J 1/10W	
R245			RK73FB2A152J	CHIP R	1.5K	J 1/10W	
R246			RK73FB2A221J	CHIP R	220	J 1/10W	
R248			RK73FB2A822J	CHIP R	8.2K	J 1/10W	
R249			RK73FB2A222J	CHIP R	2.2K	J 1/10W	
R250			RK73FB2A103J	CHIP R	10K	J 1/10W	
R251			RK73FB2A153J	CHIP R	15K	J 1/10W	
R252			RK73FB2A102J	CHIP R	1.0K	J 1/10W	
R253			RK73FB2A472J	CHIP R	4.7K	J 1/10W	
R256			RK73FB2A472J	CHIP R	4.7K	J 1/10W	
R257			RK73FB2A101J	CHIP R	100	J 1/10W	
R258			RK73FB2A331J	CHIP R	330	J 1/10W	
R259			RK73FB2A104J	CHIP R	100K	J 1/10W	
R260			RK73FB2A102J	CHIP R	1.0K	J 1/10W	
R261			RK73FB2A331J	CHIP R	330	J 1/10W	
R262			RK73FB2A102J	CHIP R	1.0K	J 1/10W	
R263			RK73FB2A332J	CHIP R	3.3K	J 1/10W	
R264			RK73FB2A222J	CHIP R	2.2K	J 1/10W	
R265			RK73FB2A272J	CHIP R	2.7K	J 1/10W	
R266			RK73FB2A332J	CHIP R	3.3K	J 1/10W	
R267			RK73FB2A822J	CHIP R	8.2K	J 1/10W	

PARTS LIST

RF UNIT (X44-3210-00)

Ref. No.	Address	New parts	Parts No.	Description				Destination
R268			RK73FB2A273J	CHIP R	27K	J	1/10W	
R269			RK73FB2A103J	CHIP R	10K	J	1/10W	
R271			RK73FB2A224J	CHIP R	220K	J	1/10W	
R272			RK73FB2A104J	CHIP R	100K	J	1/10W	
R276			RK73FB2A474J	CHIP R	470K	J	1/10W	
R277			RK73FB2A103J	CHIP R	10K	J	1/10W	
R278			RK73FB2A224J	CHIP R	220K	J	1/10W	
R279			RK73FB2A473J	CHIP R	47K	J	1/10W	
R280			RK73FB2A223J	CHIP R	22K	J	1/10W	
R281			RK73FB2A222J	CHIP R	2.2K	J	1/10W	
R284			RK73FB2A224J	CHIP R	220K	J	1/10W	
R285			RK73FB2A103J	CHIP R	10K	J	1/10W	
R286			RK73FB2A101J	CHIP R	100	J	1/10W	
R287			RK73FB2A103J	CHIP R	10K	J	1/10W	
R288			RK73FB2A472J	CHIP R	4.7K	J	1/10W	
R289			RK73FB2A103J	CHIP R	10K	J	1/10W	
R290,291			RK73FB2A472J	CHIP R	4.7K	J	1/10W	
R292,293			RK73FB2A681J	CHIP R	680	J	1/10W	
R294-297			RK73FB2A224J	CHIP R	220K	J	1/10W	
R298			RK73FB2A472J	CHIP R	4.7K	J	1/10W	
R320			RK73FB2A472J	CHIP R	4.7K	J	1/10W	
R322,323			RK73FB2A223J	CHIP R	22K	J	1/10W	
R324			RK73FB2A101J	CHIP R	100	J	1/10W	
R325			RK73FB2A102J	CHIP R	1.0K	J	1/10W	
R329			RK73FB2A224J	CHIP R	220K	J	1/10W	
R330			RK73FB2A104J	CHIP R	100K	J	1/10W	
R331			RK73FB2A684J	CHIP R	680K	J	1/10W	
R332			RK73FB2A103J	CHIP R	10K	J	1/10W	
R333			RK73FB2A680J	CHIP R	68	J	1/10W	
R334			RK73FB2A391J	CHIP R	390	J	1/10W	
R335			RK73FB2A272J	CHIP R	2.7K	J	1/10W	
R336,337			RK73FB2A104J	CHIP R	100K	J	1/10W	
R338			RK73FB2A154J	CHIP R	150K	J	1/10W	
R339			RK73FB2A224J	CHIP R	220K	J	1/10W	
R340			RK73FB2A101J	CHIP R	100	J	1/10W	
R351-362			RK73FB2A103J	CHIP R	10K	J	1/10W	
R363			R92-0670-05	CHIP R	0 OHM			
R380			RK73FB2A682J	CHIP R	6.8K	J	1/10W	
R381			RK73FB2A183J	CHIP R	18K	J	1/10W	
R382			RK73FB2A181J	CHIP R	180	J	1/10W	
R383-385			R92-0670-05	CHIP R	0 OHM			
R386			RK73FB2A330J	CHIP R	33	J	1/10W	
R500			RK73FB2A103J	CHIP R	10K	J	1/10W	
R501			RK73FB2A470J	CHIP R	47	J	1/10W	
R502			RK73FB2A331J	CHIP R	330	J	1/10W	
R503			RK73FB2A472J	CHIP R	4.7K	J	1/10W	
R504			RK73FB2A681J	CHIP R	680	J	1/10W	
R505			RK73FB2A561J	CHIP R	560	J	1/10W	
R506			RK73FB2A333J	CHIP R	33K	J	1/10W	
R507			RK73FB2A101J	CHIP R	100	J	1/10W	
R508			RK73FB2A272J	CHIP R	2.7K	J	1/10W	
R509			RK73FB2A681J	CHIP R	680	J	1/10W	
R510			RK73FB2A470J	CHIP R	47	J	1/10W	
R511			RK73FB2A122J	CHIP R	1.2K	J	1/10W	
R512			RK73FB2A472J	CHIP R	4.7K	J	1/10W	
R513			RK73FB2A103J	CHIP R	10K	J	1/10W	
R514			RK73FB2A220J	CHIP R	22	J	1/10W	
R515			RK73FB2A331J	CHIP R	330	J	1/10W	
R516			RK73FB2A560J	CHIP R	56	J	1/10W	

Ref. No.	Address	New parts	Parts No.	Description				Destination
R517-519			RK73FB2A470J	CHIP R	47	J	1/10W	
R520			RK73FB2A101J	CHIP R	100	J	1/10W	
R521			RK73FB2A223J	CHIP R	22K	J	1/10W	
R522			RK73FB2A331J	CHIP R	330	J	1/10W	
R523			RK73FB2A470J	CHIP R	47	J	1/10W	
R524,525			RK73FB2A102J	CHIP R	1.0K	J	1/10W	
R526			RK73FB2A331J	CHIP R	330	J	1/10W	
R527			RK73FB2A680J	CHIP R	68	J	1/10W	
R528			RK73FB2A391J	CHIP R	390	J	1/10W	
R529			RK73FB2A680J	CHIP R	68	J	1/10W	
R530			RK73FB2A103J	CHIP R	10K	J	1/10W	
R531			RK73FB2A222J	CHIP R	2.2K	J	1/10W	
R532			RK73FB2A151J	CHIP R	150	J	1/10W	
R533			RK73FB2A680J	CHIP R	68	J	1/10W	
R534			RK73FB2A101J	CHIP R	100	J	1/10W	
R535			RK73FB2A471J	CHIP R	470	J	1/10W	
R536			RK73FB2A470J	CHIP R	47	J	1/10W	
R537			RK73FB2A220J	CHIP R	22	J	1/10W	
R545			RK73FB2A103J	CHIP R	10K	J	1/10W	
R546			RK73FB2A821J	CHIP R	820	J	1/10W	
R547			RK73FB2A331J	CHIP R	330	J	1/10W	
R548,549			RK73FB2A470J	CHIP R	47	J	1/10W	
R550			RK73FB2A181J	CHIP R	180	J	1/10W	
R551			RK73FB2A221J	CHIP R	220	J	1/10W	
R552			RK73FB2A101J	CHIP R	100	J	1/10W	
R553			RK73FB2A333J	CHIP R	33K	J	1/10W	
R554			RK73FB2A682J	CHIP R	6.8K	J	1/10W	
R555,556			RK73FB2A101J	CHIP R	100	J	1/10W	
R557			RK73FB2A221J	CHIP R	220	J	1/10W	
R558			RK73FB2A101J	CHIP R	100	J	1/10W	
R559,560			RK73FB2A473J	CHIP R	47K	J	1/10W	
R561,562			RK73FB2A101J	CHIP R	100	J	1/10W	
R563			RK73FB2A102J	CHIP R	1.0K	J	1/10W	
R564			RK73FB2A681J	CHIP R	680	J	1/10W	
R565			RK73FB2A101J	CHIP R	100	J	1/10W	
R566			RK73FB2A471J	CHIP R	470	J	1/10W	
R567			RK73FB2A221J	CHIP R	220	J	1/10W	
R570,571			RK73FB2A222J	CHIP R	2.2K	J	1/10W	
R572			RK73FB2A272J	CHIP R	2.7K	J	1/10W	
R580-583			RK73FB2A223J	CHIP R	22K	J	1/10W	
R584			RK73FB2A101J	CHIP R	100	J	1/10W	
R586			RK73FB2A682J	CHIP R	6.8K	J	1/10W	
R587			RK73FB2A473J	CHIP R	47K	J	1/10W	
R588,589			RK73FB2A101J	CHIP R	100	J	1/10W	
R591			RK73FB2A682J	CHIP R	6.8K	J	1/10W	
R592			RK73FB2A473J	CHIP R	47K	J	1/10W	
R593,594			RK73FB2A101J	CHIP R	100	J	1/10W	
R596			RK73FB2A682J	CHIP R	6.8K	J	1/10W	
R597			RK73FB2A473J	CHIP R	47K	J	1/10W	
R598,599			RK73FB2A101J	CHIP R	100	J	1/10W	
R601			RK73FB2A682J	CHIP R	6.8K	J	1/10W	
R602			RK73FB2A473J	CHIP R	47K	J	1/10W	
R603			RK73FB2A101J	CHIP R	100	J	1/10W	
R604			RK73FB2A470J	CHIP R	47	J	1/10W	
R605			RK73FB2A392J	CHIP R	3.9K	J	1/10W	
R606			RK73FB2A103J	CHIP R	10K	J	1/10W	
R608			RK73FB2A471J	CHIP R	470	J	1/10W	
R609,610			RK73FB2A103J	CHIP R	10K	J	1/10W	
R611			RK73FB2A102J	CHIP R	1.0K	J	1/10W	

PARTS LSIT

RF UNIT (X44-3210-00)

Ref. No.	Address	New parts	Parts No.	Description	Destination
R612			RK73FB2A821J	CHIP R 820 J 1/10W	
R613			RK73FB2A271J	CHIP R 270 J 1/10W	
R614			RK73FB2A101J	CHIP R 100 J 1/10W	
R615			RK73FB2A220J	CHIP R 22 J 1/10W	
R616			RK73FB2A470J	CHIP R 47 J 1/10W	
R617			RK73FB2A392J	CHIP R 3.9K J 1/10W	
R618			RK73FB2A103J	CHIP R 10K J 1/10W	
R619			RK73FB2A220J	CHIP R 22 J 1/10W	
R620			RK73FB2A471J	CHIP R 470 J 1/10W	
R621			RK73FB2A183J	CHIP R 18K J 1/10W	
R622			RK73FB2A122J	CHIP R 1.2K J 1/10W	
R623			RK73FB2A102J	CHIP R 1.0K J 1/10W	
R624			RK73FB2A334J	CHIP R 330K J 1/10W	
R625			RK73FB2A182J	CHIP R 1.8K J 1/10W	
R626			RK73FB2A331J	CHIP R 330 J 1/10W	
R627			RK73FB2A102J	CHIP R 1.0K J 1/10W	
R628			RK73FB2A101J	CHIP R 100 J 1/10W	
R629			RK73FB2A821J	CHIP R 820 J 1/10W	
R630			RK73FB2A822J	CHIP R 8.2K J 1/10W	
R631			RK73FB2A103J	CHIP R 10K J 1/10W	
R632			RK73FB2A102J	CHIP R 1.0K J 1/10W	
R633			RK73FB2A181J	CHIP R 180 J 1/10W	
R634			RK73FB2A331J	CHIP R 330 J 1/10W	
R635			RK73FB2A823J	CHIP R 82K J 1/10W	
R636			RK73FB2A333J	CHIP R 33K J 1/10W	
R637			RK73FB2A101J	CHIP R 100 J 1/10W	
R638			RK73FB2A470J	CHIP R 47 J 1/10W	
R639			RK73FB2A682J	CHIP R 6.8K J 1/10W	
R640			RK73FB2A102J	CHIP R 1.0K J 1/10W	
R641			RK73FB2A151J	CHIP R 150 J 1/10W	
R642			RK73FB2A150J	CHIP R 15 J 1/10W	
R643			RK73FB2A471J	CHIP R 470 J 1/10W	
R644			RK73FB2A103J	CHIP R 10K J 1/10W	
R645			RK73FB2A392J	CHIP R 3.9K J 1/10W	
R646			RK73FB2A822J	CHIP R 8.2K J 1/10W	
R647			RK73FB2A102J	CHIP R 1.0K J 1/10W	
R648			RK73FB2A684J	CHIP R 680K J 1/10W	
R649			RK73FB2A182J	CHIP R 1.8K J 1/10W	
R650			RK73FB2A103J	CHIP R 10K J 1/10W	
R651			RK73FB2A472J	CHIP R 4.7K J 1/10W	
R652			RK73FB2A103J	CHIP R 10K J 1/10W	
R653			RK73FB2A104J	CHIP R 100K J 1/10W	
R655-656			RK73FB2A103J	CHIP R 10K J 1/10W	
R657			RK73FB2A471J	CHIP R 470 J 1/10W	
R658			RK73FB2A101J	CHIP R 100 J 1/10W	
R659			RK73FB2A470J	CHIP R 47 J 1/10W	
R690-697			RK73FB2A221J	CHIP R 220 J 1/10W	
R699			RK73FB2A102J	CHIP R 1.0K J 1/10W	
R710-712			RK73FB2A103J	CHIP R 10K J 1/10W	
R800			RK73FB2A223J	CHIP R 22K J 1/10W	
R801			RK73FB2A103J	CHIP R 10K J 1/10W	
R802			RK73FB2A222J	CHIP R 2.2K J 1/10W	
R803			RK73FB2A271J	CHIP R 270 J 1/10W	
R804			RK73FB2A101J	CHIP R 100 J 1/10W	
R901-902			RK73FB2A101J	CHIP R 100 J 1/10W	
R903-906			RK73FB2A101J	CHIP R 100 J 1/10W	
R908-920			RK73FB2A101J	CHIP R 100 J 1/10W	
R925-928			RK73EB2B221J	CHIP R 220 J 1/8W	
VR2			R12-6417-05	TRIMMING POT. 1K	

Ref. No.	Address	New parts	Parts No.	Description	Destination
VR3			R12-6427-05	TRIMMING POT. 47K	
VR901-904		*	R31-0605-05	VARIABLE RESISTOR 100K	
VR905,906		*	R31-0606-05	VARIABLE RESISTOR 10K	
K1-3			S51-1428-05	RELAY	
K4			S51-1420-05	RELAY	
S800			S31-2420-05	SLIDE SWITCH	
D1-3			LFB01	DIODE	
D4-7			RLS245	DIODE	
D8			1SV128	DIODE	
D10			LFB01	DIODE	
D11			1SV128	DIODE	
D12			RLS135	DIODE	
D13			1SV128	DIODE	
D14			RLS135	DIODE	
D15			1SV128	DIODE	
D16			RLS135	DIODE	
D17			1SV128	DIODE	
D18			RLS135	DIODE	
D19			1SV128	DIODE	
D20			RLS135	DIODE	
D21			1SV128	DIODE	
D22			RLS135	DIODE	
D23			1SV128	DIODE	
D24			RLS135	DIODE	
D25			1SV128	DIODE	
D26			RLS135	DIODE	
D27			1SV128	DIODE	
D28			RLS135	DIODE	
D29			1SV128	DIODE	
D30			RLS135	DIODE	
D31			1SV128	DIODE	
D32			RLS135	DIODE	
D33			1SV128	DIODE	
D35			RLS135	DIODE	
D36			1SV128	DIODE	
D37			RLS135	DIODE	
D38,39			1SV128	DIODE	
D40			RLS135	DIODE	
D41			1SV128	DIODE	
D42,43			DAN235K	DIODE	
D46			HSM88ASR	DIODE	
D47			LFB01	DIODE	
D49			1SV172	DIODE	
D50			RD6.2M(B1)	ZENER DIODE	
D51			B30-2004-05	LED	
D52			RD12M(B2)	ZENER DIODE	
D53,54			1SS355	DIODE	
D55			RD3.0M(B2)	ZENER DIODE	
D56			1SS355	DIODE	
D57			B30-2004-05	LED	
D58			LFB01	DIODE	
D59			1SS355	DIODE	
D60,61			DAN202K	DIODE	
D62-69			1SV128	DIODE	
D70			RD6.2M(B1)	ZENER DIODE	
D71			RD4.7M(B2)	ZENER DIODE	
D72			1SS355	DIODE	
D500			1SV166	DIODE	

PARTS LIST

RF UNIT (X44-3210-00)
FINAL UNIT (X45-351X-XX)

Ref. No.	Address	New parts	Parts No.	Description	Destination
D501			RLS73	DIODE	
D502			1SV166	DIODE	
D503			RLS73	DIODE	
D504			1SV166	DIODE	
D505			RLS73	DIODE	
D506			1SV166	DIODE	
D507			RLS73	DIODE	
D508			1SS181	DIODE	
IC1,2			TC9174F	IC (CMOS I/O EXTENSION)	
IC6			NJM2904M	IC (OP AMP X2)	
IC7			M62363FP	IC (8bit D/A CONVERTER)	
IC8			NJM2902M	IC (OP AMP X4)	
IC9			NJM2903M	IC (COMPARATOR X2)	
IC10			NJM78L05UA	IC (VOLTAGE REGULATOR/ +5V)	
IC500-502			F71022	IC (DDS)	
IC503			UPD74HC390G	IC (DUAL DECADE COUNTER)	
IC505,506			SN16913P	IC (DUBLE BALANCED MIXERS)	
IC507			MB86001PF	IC	
IC508			SN76514N	IC (MIXER)	
IC509			MB86001PF	IC	
IC510			TA78L09F	IC (VOLTAGE REGULATOR/ +9V)	
IC511		*	TA78DS09F	IC	
PL1,2		*	B30-2134-05	LAMP	
Q1			DTA124EK	DIGITAL TRANSISTOR	
Q2			DTC124EK	DIGITAL TRANSISTOR	
Q3			FMA1	TRANSISTOR	
Q5			2SC2954	TRANSISTOR	
Q6			2SC2712(Y)	TRANSISTOR	
Q7-12			FMG4	TRANSISTOR	
Q13			3SK131(M)	FET	
Q14,15		*	2SK2218(5)	FET	
Q16			2SC2954	TRANSISTOR	
Q17-20			2SK520(K44)	FET	
Q21			2SD1624(S)	TRANSISTOR	
Q22			2SC2714(Y)	TRANSISTOR	
Q23,24			3SK131(M)	FET	
Q26,27			2SK520(K43)	FET	
Q28-32			2SC2712(Y)	TRANSISTOR	
Q33			3SK131(M)	FET	
Q35,36			3SK184(R)	FET	
Q37-39			3SK131(M)	FET	
Q42			DTC124EK	DIGITAL TRANSISTOR	
Q43,44			2SC2712(Y)	TRANSISTOR	
Q45,46			DTC143TK	DIGITAL TRANSISTOR	
Q47			2SC2712(Y)	TRANSISTOR	
Q48			DTA124EK	DIGITAL TRANSISTOR	
Q49			2SC2712(Y)	TRANSISTOR	
Q50			2SK208(Y)	FET	
Q51			DTC124EK	DIGITAL TRANSISTOR	
Q52			2SC2712(Y)	TRANSISTOR	
Q54			2SC2712(Y)	TRANSISTOR	
Q55			2SB1188(Q,R)	TRANSISTOR	
Q56			DTC124EK	DIGITAL TRANSISTOR	
Q57,58			2SB1188(Q,R)	TRANSISTOR	
Q59,60			DTC143EK	DIGITAL TRANSISTOR	
Q61			FMC3	TRANSISTOR	
Q62			DTA143EK	DIGITAL TRANSISTOR	
Q63			FMC3	TRANSISTOR	
Q64			DTA143EK	DIGITAL TRANSISTOR	

Ref. No.	Address	New parts	Parts No.	Description	Destination
Q65			2SA1162(Y)	TRANSISTOR	
Q66			DTC114EK	DIGITAL TRANSISTOR	
Q70			DTC114EK	DIGITAL TRANSISTOR	
Q71			DTA114EK	DIGITAL TRANSISTOR	
Q500-503			2SC2712(Y)	TRANSISTOR	
Q504,505			2SK508NV(K53)	FET	
Q506-508			2SC2712(Y)	TRANSISTOR	
Q510,511			2SC2712(Y)	TRANSISTOR	
Q512-514			2SC2714(Y)	TRANSISTOR	
Q515			2SC2712(Y)	TRANSISTOR	
Q516-519			DTC114EK	DIGITAL TRANSISTOR	
Q520-523			2SK508NV(K53)	FET	
Q524,525			2SC2714(Y)	TRANSISTOR	
Q526			2SC2996(Y,O)	TRANSISTOR	
Q527-529			2SC3722K(R)	TRANSISTOR	
Q530			2SC2712(Y)	TRANSISTOR	
Q531			2SC2714(Y)	TRANSISTOR	
Q532			2SC2954	TRANSISTOR	
Q533			DTA124EK	DIGITAL TRANSISTOR	
Q534-536			2SC3722K(R)	TRANSISTOR	
Q537			2SD1757K	TRANSISTOR	
Q539			2SC2714(Y)	TRANSISTOR	
Q800			2SC2714(Y)	TRANSISTOR	
TH1			157-101-53019	THERMISTOR 100	
TH2			157-302-53008	THERMISTOR 3K	
TH3			157-101-53019	THERMISTOR 100	
TH4			157-302-53008	THERMISTOR 3K	
S901,902			W02-1687-15	ENCODER (FILTER)	
S903		*	W02-1861-05	ENCODER (RIT/XIT)	
S904			W02-1660-15	ENCODER (M.CH/VFO.CH)	
A501	2F		X58-3390-03	SUB UNIT (VCO2)	

FINAL UNIT (X45-351X-XX) 0-00 : K,P,M,M2,X 2-71 : E,E2,E3,E9

C1			CK73FF1H473Z	CHIP C	0.047UF	Z
C2			CC73FCH1H101J	CHIP C	100PF	J
C3			CC45FCH2H030C	CERAMIC	3.0PF	C
C4			CC73FCH1H560J	CHIP C	56PF	J
C5			CK73FF1H473Z	CHIP C	0.047UF	Z
C6			CE04EW1H010M	ELECTRO	1.0UF	50WV
C7			CK73FB1H103K	CHIP C	0.010UF	K
C8-18			CK73FB1H102K	CHIP C	1000PF	K
C19-33			CK73FB1H103K	CHIP C	0.010UF	K
C101			CM93D2H102J	MICA	1000PF	J
C102			CC45FSL2H331J	CERAMIC	330PF	J
C103			CC45FSL2H271J	CERAMIC	270PF	J
C104,105			CM93D2H102J	MICA	1000PF	J
C106			CC45FSL2H151J	CERAMIC	150PF	J
C107			CM93D2H222J	MICA	2200PF	J
C108		*	CC45FSL2H181J	CERAMIC	180PF	J
C109			CC45FSL2H101J	CERAMIC	100PF	J
C110			CM93D2H102J	MICA	1000PF	J
C111			CM93D2H561J	MICA	560PF	J
C112			CC45FSL2H471J	CERAMIC	470PF	J
C113,114		*	CC45FSL2H181J	CERAMIC	180PF	J
C115			CC45FSL2H391J	CERAMIC	390PF	J
C116			CC45FSL2H471J	CERAMIC	470PF	J

PARTS LSIT

FINAL UNIT (X45-351X-XX)

Ref. No.	Address	New parts	Parts No.	Description			Destination
C117			CC45FSL2H271J	CERAMIC	270PF	J	
C118			CC45FSL2H391J	CERAMIC	390PF	J	
C119			CC45FSL2H471J	CERAMIC	470PF	J	
C120		*	CC45FSL2H181J	CERAMIC	180PF	J	
C121			CC45FSL2H331J	CERAMIC	330PF	J	
C122			CC45FSL2H820J	CERAMIC	82PF	J	
C123			CC45FSL2H331J	CERAMIC	330PF	J	
C124			CC45FSL2H121J	CERAMIC	120PF	J	
C125			CC45FSL2H270J	CERAMIC	27PF	J	
C126			CC45FSL2H151J	CERAMIC	150PF	J	
C127			CC45FSL2H471J	CERAMIC	470PF	J	
C128			CC45FSL2H270J	CERAMIC	27PF	J	
C129			CC45FSL2H220J	CERAMIC	22PF	J	
C130			CC45FSL2H331J	CERAMIC	330PF	J	
C131			CC45FSL2H471J	CERAMIC	470PF	J	
C132			CC45FSL2H680J	CERAMIC	68PF	J	
C133			CC45FSL2H560J	CERAMIC	56PF	J	
C134			CC45FSL2H151J	CERAMIC	150PF	J	
C135			CC45FSL2H471J	CERAMIC	470PF	J	
C136			CC45FSL2H560J	CERAMIC	56PF	J	
C137			CC45FSL2H151J	CERAMIC	150PF	J	
C138			CC45FSL2H331J	CERAMIC	330PF	J	
C139			CC45FSL2H330J	CERAMIC	33PF	J	
C140,141			CC45FSL2H221J	CERAMIC	220PF	J	
C142			CC45FSL2H101J	CERAMIC	100PF	J	
C143,144			CC45FSL2H151J	CERAMIC	150PF	J	
C145			CC45FSL2H120J	CERAMIC	12PF	J	
C146			CC45FSL2H271J	CERAMIC	270PF	J	
C147			CC45FSL2H390J	CERAMIC	39PF	J	
C148,149			CC45FSL2H820J	CERAMIC	82PF	J	
C150			CC45FSL2H100D	CERAMIC	10PF	D	
C151			CC45FSL2H121J	CERAMIC	120PF	J	
C152			CC45FSL2H470J	CERAMIC	47PF	J	
C153			CC45FSL2H330J	CERAMIC	33PF	J	
C154			CC45FSL2H820J	CERAMIC	82PF	J	
C161			CC45FSL2H100D	CERAMIC	10PF	D	
C162		*	CC45FSL2H090D	CERAMIC	9.0PF	D	
C163			CC45FSL2H270J	CERAMIC	27PF	J	
C301,302			CK73FB1H103K	CHIP C	0.010UF	K	
C304			CC73FCH1H101J	CHIP C	100PF	J	
C305			CC73FCH1H181J	CHIP C	180PF	J	
C306			CC73FCH1H390J	CHIP C	39PF	J	
C401			CE04EW1C470M	ELECTRO	47UF	16WV	
C402			CE04EW1C100M	ELECTRO	10UF	16WV	
C405			CE04EW1E470M	ELECTRO	47UF	25WV	
C406,407			CK73FB1E104K	CHIP C	0.10UF	K	
C408			CE04EW1E470M	ELECTRO	47UF	25WV	
C409			CK73FB1E104K	CHIP C	0.10UF	K	
C410			CE04EW1C470M	ELECTRO	47UF	16WV	
C411			CK73FB1H103K	CHIP C	0.010UF	K	
C412,413			CK73FB1H222K	CHIP C	2200PF	K	
C414			CE04EW1C330M	ELECTRO	33UF	16WV	
C415,416			CE04EW1C101M	ELECTRO	100UF	16WV	
C417			CK73FB1H103K	CHIP C	0.010UF	K	
C418-420			CK73FB1H102K	CHIP C	1000PF	K	
C421			CK73FB1H103K	CHIP C	0.010UF	K	
C422			CE04EW1E470M	ELECTRO	47UF	25WV	
C431-433			CK73FB1H103K	CHIP C	0.010UF	K	
C435			CK73FB1E104K	CHIP C	0.10UF	K	

Ref. No.	Address	New parts	Parts No.	Description			Destination
C436			CK73FB1H102K	CHIP C	1000PF	K	
C437			CK73FB1H103K	CHIP C	0.010UF	K	
C438			CE04EW1H010M	ELECTRO	1.0UF	50WV	
C439			CK73FB1H103K	CHIP C	0.010UF	K	
C450			CK73FB1H103K	CHIP C	0.010UF	K	
C452-454			CK73FB1H103K	CHIP C	0.010UF	K	
C455			CK73FB1H102K	CHIP C	1000PF	K	
C456-458			CK73FB1H103K	CHIP C	0.010UF	K	
C461			CC73FSL1H221J	CHIP C	220PF	J	
C465			CK73FB1E104K	CHIP C	0.10UF	K	
C466-471			CK73FF1C105Z	CHIP C	1.0UF	Z	
C472,473			CK73FB1E104K	CHIP C	0.10UF	K	
C479			CE04EW1H010M	ELECTRO	1.0UF	50WV	
C480-485			CK73FB1H103K	CHIP C	0.010UF	K	
C486-488			CK73FB1E104K	CHIP C	0.10UF	K	
C489			CC73FCH1H470J	CHIP C	47PF	J	
C490,491			CK73FB1H103K	CHIP C	0.010UF	K	
C492			CK73FB1E104K	CHIP C	0.10UF	K	
C493			CK73FB1H103K	CHIP C	0.010UF	K	
C494-496			CK73FB1E104K	CHIP C	0.10UF	K	
C497-499			CK73FB1H103K	CHIP C	0.010UF	K	
C502			CK73FB1E473K	CHIP C	0.047UF	K	
C503			CK73FB1H102K	CHIP C	1000PF	K	
C504,505			CK73FB1E473K	CHIP C	0.047UF	K	
C506			CK73FB1E223K	CHIP C	0.022UF	K	
C507			CK73FB1H681K	CHIP C	680PF	K	
C508,509			CK73FB1E473K	CHIP C	0.047UF	K	
C510,511			CK73FB1E223K	CHIP C	0.022UF	K	
C512			CE04EW1C100M	ELECTRO	10UF	16WV	
C513			CC45FSL2H151J	CERAMIC	150PF	J	
C514,515			CK73FB1E223K	CHIP C	0.022UF	K	
C516			CE04EW1E101M	ELECTRO	100UF	25WV	
C517			CM93D2H681J	MICA	680PF	J	
C518,519			C91-1004-05	CHIP C	6800PF	J	
C520			CK73FB1H102K	CHIP C	1000PF	K	
C521			CK73FB1E473K	CHIP C	0.047UF	K	
C522			CE04EW1C100M	ELECTRO	10UF	16WV	
C523			CK73FB1E223K	CHIP C	0.022UF	K	
C524			CE04EW1E470M	ELECTRO	47UF	25WV	
C525			CM73F2H122J	CHIP C	1200PF	J	
C526			CC45FSL2H151J	CERAMIC	150PF	J	
C527			CE04EW1E101M	ELECTRO	100UF	25WV	
C528,529			CK73FB1E104K	CHIP C	0.10UF	K	
C533			CM73F2H561J	CHIP C	560PF	J	
C550			CK73FB1E104K	CHIP C	0.10UF	K	
C551			CK73FB1H103K	CHIP C	0.010UF	K	
C552,553			CK73FB1H102K	CHIP C	1000PF	K	
C554			CK73FB1H223K	CHIP C	0.022UF	K	
C557			CK73FB1H102K	CHIP C	1000PF	K	
C558			CK73FB1H103K	CHIP C	0.010UF	K	
C559			CK73FB1E104K	CHIP C	0.10UF	K	
C560-563		*	C91-1171-05	HV C	0.01UF	1KWV	
C601			CK73FB1H103K	CHIP C	0.010UF	K	
C602			CE04EW1E102M	ELECTRO	1000UF	25WV	
C603			CK73FB1H103K	CHIP C	0.010UF	K	
C605,606			CK73FB1H103K	CHIP C	0.010UF	K	
C608,609			CK73FB1E104K	CHIP C	0.10UF	K	
C610,611			CK73FB1E473K	CHIP C	0.047UF	K	
C612,613			CE04EW1E470M	ELECTRO	47UF	25WV	

PARTS LIST

FINAL UNIT (X45-351X-XX)

Ref. No.	Address	New parts	Parts No.	Description	Destination
C614			CE04EW1E102M	ELECTRO 1000UF 25WV	
C620			CK73FF1E104Z	CHIP C 0.10UF Z	
C621,622			CE04EW1E470M	ELECTRO 47UF 25WV	
C623			CK73FF1E104Z	CHIP C 0.10UF Z	
C701-711			CK73FB1H103K	CHIP C 0.010UF K	
C712			CE04EW1C471M	ELECTRO 470UF 16WV	
C713			CK73FB1E103K	CHIP C 0.010UF K	
C901			CK73FB1H103K	CHIP C 0.010UF K	
C903			CE04EW1H2R2M	ELECTRO 2.2UF 50WV	
TC1			C05-0030-15	TRIMMER CAPACITOR 20PF	
CN1,2			E04-0191-05	RF COAXIAL CABLE SOCKET	
CN3			E40-5469-05	FLAT CABLE CONNECTOR (12P)	
CN4			E40-5068-05	PIN CONNECTOR (11P)	
CN5			E23-0996-05	TERMINAL (TEST)	
CN301			E40-3238-05	PIN CONNECTOR (3P)	
CN302-305			E04-0191-05	RF COAXIAL CABLE SOCKET	
CN306,307			E23-0996-05	TERMINAL (TEST)	
CN401			E23-5745-05	FLAT CABLE CONNECTOR (20P)	
CN402			E40-5469-05	FLAT CABLE CONNECTOR (12P)	
CN403			E40-3242-05	PIN CONNECTOR (7P)	
CN404			E40-3237-05	PIN CONNECTOR (2P)	
CN405			E40-3239-05	PIN CONNECTOR (4P)	
CN406			E40-5470-05	FLAT CABLE CONNECTOR (13P)	
CN407			E40-3240-05	PIN CONNECTOR (5P)	
CN410			E04-0154-05	RF COAXIAL CABLE SOCKET	
CN411			E40-3239-05	PIN CONNECTOR (4P)	
CN412			E04-0154-05	RF COAXIAL CABLE SOCKET	
CN413			E40-3238-05	PIN CONNECTOR (3P)	
CN501,502			E04-0191-05	RF COAXIAL CABLE SOCKET	
CN503			E40-3240-05	PIN CONNECTOR (5P)	
CN504			E40-3238-05	PIN CONNECTOR (3P)	
CN505-507			E23-0996-05	TERMINAL (TEST)	
CN601			E40-3238-05	PIN CONNECTOR (3P)	
CN602			E40-3239-05	PIN CONNECTOR (4P)	
CN603			E40-5470-05	FLAT CABLE CONNECTOR (13P)	
CN604			E40-3240-05	PIN CONNECTOR (5P)	
CN605			E40-3237-05	PIN CONNECTOR (2P)	
W1	1J,2K	*	E37-0539-05	LEAD WIRE WITH CONNECTOR	
W501	1J,2J	*	E37-0525-05	LEAD WIRE WITH TERMINALR	
W502	2J		E37-0067-05	LEAD WIRE WITH MINIPIN PLUG	
202	2G		F29-0014-05	INSULATING BUSH	
F401			F06-4029-05	FUSE (4A 250V) : C/5	
F601			F53-0093-05	FUSE (5A 125V) : D/5	
A401,402			J13-0075-05	FUSE CLIP : C/5	
CF451			L72-0319-05	CERAMIC FILTER (455KHZ)	
CF452			L72-0333-05	CERAMIC FILTER (455KHZ)	
CF453			L72-0366-05	CERAMIC FILTER (455KHZ)	
L1			L40-2221-33	SMALL FIXED INDUCTOR	
L2			L39-0480-15	TROIDAL COIL	
L3			L40-2221-33	SMALL FIXED INDUCTOR	
L4-10			L40-1015-48	SMALL FIXED INDUCTOR (100UH)	
L101			L39-0491-05	TROIDAL COIL (CORE : L92-0107-05)	
L102			L39-0492-05	TROIDAL COIL (CORE : L92-0107-05)	
L103			L39-0493-05	TROIDAL COIL (CORE : L92-0107-05)	
L104			L39-1223-05	TROIDAL COIL (CORE : L92-0107-05)	
L105			L39-1224-05	TROIDAL COIL (CORE : L92-0107-05)	
L106			L39-1225-05	TROIDAL COIL (CORE : L92-0107-05)	
L107			L39-1222-05	TROIDAL COIL (CORE : L92-0107-05)	

Ref. No.	Address	New parts	Parts No.	Description	Destination
L108			L39-1223-05	TROIDAL COIL (CORE : L92-0107-05)	
L109,110			L39-1221-05	TROIDAL COIL (CORE : L92-0108-05)	
L111			L34-1279-05	COIL	
L112			L34-1281-05	COIL	
L113			L34-1279-05	COIL	
L114			L34-1280-05	COIL	
L115			L34-1281-05	COIL	
L116			L34-1282-05	COIL	
L301,302			L40-1015-48	SMALL FIXED INDUCTOR (100UH)	
L303,304			L34-1035-05	COIL	
L401			L40-1015-48	SMALL FIXED INDUCTOR (100UH)	
L450			L40-2215-48	SMALL FIXED INDUCTOR (220UH)	
L451			L34-0943-05	COIL	
L452			L34-4255-05	COIL	
L453		*	L40-4711-15	SMALL FIXED INDUCTOR	
L454			L40-2221-33	SMALL FIXED INDUCTOR	
L455,456			L34-4254-05	COIL	
L457,458			L34-4255-05	COIL	
L460			L40-3395-48	SMALL FIXED INDUCTOR (3.3UH)	
L461-465			L40-1092-12	SMALL FIXED INDUCTOR	
L466			L40-1592-15	SMALL FIXED INDUCTOR	
L501		*	L40-1505-48	SMALL FIXED INDUCTOR (15UH)	
L502			L40-3395-48	SMALL FIXED INDUCTOR (3.3UH)	
L503			L39-0481-05	TROIDAL COIL	
L504			L33-0617-15	CHOKE COIL	
L505,506			L33-0699-05	CHOKE COIL	
L507			L39-1257-05	TROIDAL COIL	
L508,509			L33-0617-15	CHOKE COIL	
L510			L39-0482-05	TROIDAL COIL	
L511			L33-0651-05	CHOKE COIL	
L512			L33-0617-15	CHOKE COIL	
L513			L39-1209-25	TROIDAL COIL	
L514		*	L40-1505-48	SMALL FIXED INDUCTOR (15UH)	
L515,516		*	L92-0150-05	TROIDAL CORE (W501)	
L520			L40-3985-48	SMALL FIXED INDUCTOR (390NH)	
L601			L40-1005-48	SMALL FIXED INDUCTOR (10UH)	
L602			L40-1092-12	SMALL FIXED INDUCTOR	
R	2G,2H		N67-3010-46	PAN HEAD SEMS SCREW	
K	2G,2H		N87-3006-46	BRAZIER HEAD TAPTITE SCREW	
R1			RK73FB2A100J	CHIP R 10 J 1/10W	
R2-5			RK73FB2A330J	CHIP R 33 J 1/10W	
R6-9			RK73FB2A270J	CHIP R 27 J 1/10W	
R10			RK73FB2A181J	CHIP R 180 J 1/10W	
R11-13			RK73FB2A101J	CHIP R 100 J 1/10W	
R14			RK73FB2A473J	CHIP R 47K J 1/10W	
R15			RK73FB2A103J	CHIP R 10K J 1/10W	
R20			RK73FB2A393J	CHIP R 39K J 1/10W	
R21			RK73FB2A223J	CHIP R 22K J 1/10W	
R22			RK73FB2A104J	CHIP R 100K J 1/10W	
R301-304			RK73FB2A104J	CHIP R 100K J 1/10W	
R305			RK73FB2A473J	CHIP R 47K J 1/10W	
R401			RK73FB2A100J	CHIP R 10 J 1/10W	
R402			RK73FB2A272J	CHIP R 2.7K J 1/10W	
R403,404			RK73FB2A273J	CHIP R 27K J 1/10W	
R405			RK73FB2A473J	CHIP R 47K J 1/10W	
R406			RK73FB2A150J	CHIP R 15 J 1/10W	
R407			RK73FB2A221J	CHIP R 220 J 1/10W	
R408			RK73FB2A101J	CHIP R 100 J 1/10W	

PARTS LSIT

FINAL UNIT (X45-351X-XX)

Ref. No.	Address	New parts	Parts No.	Description	Destination
R409,410			R92-1332-05	CHIP R 160 J 1W	
R411			RK73FB2A182J	CHIP R 1.8K J 1/10W	
R415			RK73FB2A101J	CHIP R 100 J 1/10W	
R416			RK73FB2A220J	CHIP R 22 J 1/10W	
R417			RK73FB2A101J	CHIP R 100 J 1/10W	
R418			RK73FB2A102J	CHIP R 1.0K J 1/10W	
R419			RK73FB2A104J	CHIP R 100K J 1/10W	
R420			RK73FB2A102J	CHIP R 1.0K J 1/10W	
R421			RK73FB2A393J	CHIP R 39K J 1/10W	
R422			RK73FB2A220J	CHIP R 22 J 1/10W	
R423,424			RK73FB2A331J	CHIP R 330 J 1/10W	
R425			RK73FB2A220J	CHIP R 22 J 1/10W	
R426			RK73FB2A103J	CHIP R 10K J 1/10W	
R427			RK73FB2A102J	CHIP R 1.0K J 1/10W	
R428			RK73FB2A222J	CHIP R 2.2K J 1/10W	
R429			RK73FB2A102J	CHIP R 1.0K J 1/10W	
R439			RK73FB2A470J	CHIP R 47 J 1/10W	
R440			RK73FB2A152J	CHIP R 1.5K J 1/10W	
R441,442			RK73FB2A332J	CHIP R 3.3K J 1/10W	
R443,444			RK73FB2A101J	CHIP R 100 J 1/10W	
R445,446			RK73FB2A472J	CHIP R 4.7K J 1/10W	
R447,448			RK73FB2A101J	CHIP R 100 J 1/10W	
R449,450			RK73FB2A222J	CHIP R 2.2K J 1/10W	
R451,452			RK73FB2A101J	CHIP R 100 J 1/10W	
R453			RK73FB2A152J	CHIP R 1.5K J 1/10W	
R454,455			RK73FB2A332J	CHIP R 3.3K J 1/10W	
R456			RK73FB2A333J	CHIP R 33K J 1/10W	
R457,458			RK73FB2A104J	CHIP R 100K J 1/10W	
R459			RK73FB2A471J	CHIP R 470 J 1/10W	
R460			RK73FB2A220J	CHIP R 22 J 1/10W	
R461			RK73FB2A102J	CHIP R 1.0K J 1/10W	
R462			RK73FB2A101J	CHIP R 100 J 1/10W	
R463,464			RK73FB2A151J	CHIP R 150 J 1/10W	
R465,466			RK73FB2A471J	CHIP R 470 J 1/10W	
R467-470			RK73FB2A330J	CHIP R 33 J 1/10W	
R471			RK73FB2A102J	CHIP R 1.0K J 1/10W	
R472			RK73FB2A104J	CHIP R 100K J 1/10W	
R473			RK73FB2A473J	CHIP R 47K J 1/10W	
R474			RK73FB2A104J	CHIP R 100K J 1/10W	
R475			RK73FB2A473J	CHIP R 47K J 1/10W	
R476			RK73FB2A472J	CHIP R 4.7K J 1/10W	
R480			RK73FB2A470J	CHIP R 47 J 1/10W	
R481			RK73FB2A471J	CHIP R 470 J 1/10W	
R482			RK73FB2A330J	CHIP R 33 J 1/10W	
R483			RK73FB2A221J	CHIP R 220 J 1/10W	
R484			RK73FB2A223J	CHIP R 22K J 1/10W	
R485			RK73FB2A822J	CHIP R 8.2K J 1/10W	
R486			RK73FB2A560J	CHIP R 56 J 1/10W	
R487-489			RK73FB2A223J	CHIP R 22K J 1/10W	
R490			RK73FB2A681J	CHIP R 680 J 1/10W	
R491,492			RK73FB2A471J	CHIP R 470 J 1/10W	
R501			RK73FB2A101J	CHIP R 100 J 1/10W	
R502			RK73FB2A331J	CHIP R 330 J 1/10W	
R503			RK73FB2A681J	CHIP R 680 J 1/10W	
R504			RK73FB2A331J	CHIP R 330 J 1/10W	
R505,506			RK73FB2A6R8J	CHIP R 6.8 J 1/10W	
R507			RK73FB2A681J	CHIP R 680 J 1/10W	
R508,509			R92-0696-05	CHIP R 33 J 1/4W	
R510			RK73FB2A331J	CHIP R 330 J 1/10W	

Ref. No.	Address	New parts	Parts No.	Description	Destination
R511			RK73FB2A151J	CHIP R 150 J 1/10W	
R512,513			R92-1318-05	CHIP R 100 J 1W	
R514-517			RS14DB3A5R6J	FL-PROOF RS 5.6 J 1W	
R518,519			RS14DB3A150J	FL-PROOF RS 15 J 1W	
R520			RK73FB2A561J	CHIP R 560 J 1/10W	
R521,522			RS14DB3A5R6J	FL-PROOF RS 5.6 J 1W	
R530		*	R92-2543-05	FIXED RESISTOR 6.8 1/2W	
R601			RK73FB2A472J	CHIP R 4.7K J 1/10W	
R701			RK73FB2A103J	CHIP R 10K J 1/10W	
R702			RK73FB2A101J	CHIP R 100 J 1/10W	
R703-705			RK73FB2A562J	CHIP R 5.6K J 1/10W	
R706			RK73FB2A472J	CHIP R 4.7K J 1/10W	
R707			RK73FB2A821J	CHIP R 820 J 1/10W	
R708			RK73FB2A272J	CHIP R 2.7K J 1/10W	
R709			RK73FB2A333J	CHIP R 33K J 1/10W	
R710			R92-1282-05	CHIP R 10 J 1W	
R712			R92-1316-05	CHIP R 39 J 1W	
R713			RK73FB2A471J	CHIP R 470 J 1/10W	
R714			RK73FB2A153J	CHIP R 15K J 1/10W	
VR1			R12-6730-05	TRIMMING POT. 220	
VR501,502			R12-6734-05	TRIMMING POT. 1K	
W301			R92-0150-05	JUMPER REST 0 OHM (ANT1)	
W303			R92-0150-05	JUMPER REST 0 OHM (ANT2)	
K1-14			S51-1420-05	RELAY	
K301			S51-2417-05	RELAY	
K302			S51-1429-05	RELAY	
K601			S51-2423-05	RELAY	
D1,2			1SS101	DIODE	
D3			RLZJ5.1B	ZENER DIODE	
D4-10			LFB01	DIODE	
D11			DAP202K	DIODE	
D301,302			DSA301LA	DIODE	
D303,304			LFB01	DIODE	
D401			1SS226	DIODE	
D402		*	RD9.1M(B2)	ZENER DIODE	
D450			DAN235K	DIODE	
D451-456			1SV128	DIODE	
D457			DAN235K	DIODE	
D501			MA27T-B	DIODE	
D502,503			SV03YS	DIODE	
D504			SG-5L(R)	DIODE	
D601			LFB01	DIODE	
D701			DAN202K	DIODE	
D702			LFB01	DIODE	
IC1			TC9174F	IC (CMOS I/O EXTENSION)	
IC402			UPC7805H	IC (VOLTAGE REGULATOR/ +5V)	
IC601,602			UPC7808H	IC (VOLTAGE REGULATOR/ +8V)	
IC701			NJM2904M	IC (OP AMP X2)	
Q1-4			FMA7	TRANSISTOR	
Q5			DTC114EK	DIGITAL TRANSISTOR	
Q6			FMC2	TRANSISTOR	
Q10-16			DTB143EK	DIGITAL TRANSISTOR	
Q401			2SA1162(Y)	TRANSISTOR	
Q402,403			2SC2712(Y)	TRANSISTOR	
Q404			2SD1624(S)	TRANSISTOR	
Q405			2SD1406(Y)	TRANSISTOR	
Q460,461			3SK131(M)	FET	
Q470,471			3SK131(M)	FET	

PARTS LIST

FINAL UNIT (X45-351X-XX)
AT UNIT (X53-3340-02)

Ref. No.	Address	New parts	Parts No.	Description	Destination
Q472			2SC2712(Y)	TRANSISTOR	
Q475			3SK131(M)	FET	
Q501			2SC1971	TRANSISTOR	
Q502,503			2SC3133	TRANSISTOR	
Q504			2SD1406(Y)	TRANSISTOR	
Q505,506			2SC2879	TRANSISTOR	
Q507			2SD1406(Y)	TRANSISTOR	
Q601			DTC143TK	DIGITAL TRANSISTOR	
Q701			DTC114TK	DIGITAL TRANSISTOR	
Q702,703			DTD114EK	DIGITAL TRANSISTOR	
TH452			157-502-53002	THERMISTOR 5K	
TH701			5TP-41S	THERMISTOR	
AT UNIT (X53-3340-02)					
C1			CC45FSL2H330J	CERAMIC 33PF J	
C2-8			CK73FB1E103K	CHIP C 0.010UF K	
C9,10			CK73FB1H102K	CHIP C 1000PF K	
C11			CK73FB1E103K	CHIP C 0.010UF K	
C12			CE04EW1C470M	ELECTRO 47UF 16WV	
C13-15			CK73FB1E103K	CHIP C 0.010UF K	
C16			CK73EF1E474Z	CHIP C 0.47UF Z	
C17-19			CK73FB1E103K	CHIP C 0.010UF K	
C20			CE04EW1C101M	ELECTRO 100UF 16WV	
C21-23			CK73FB1E103K	CHIP C 0.010UF K	
C24			CK73EF1E474Z	CHIP C 0.47UF Z	
C25			CK73FB1E103K	CHIP C 0.010UF K	
C26			CE04EW1C101M	ELECTRO 100UF 16WV	
C27-37			CK73FB1E103K	CHIP C 0.010UF K	
C38			CK73FB1H103K	CHIP C 0.010UF K	
C101-103			CK73FB1H103K	CHIP C 0.010UF K	
C105-108			CK73FB1H103K	CHIP C 0.010UF K	
TC1			C05-0031-15	TRIMMER CAPACITOR 10PF	
VC1,2	2L		C02-0023-05	VARIABLE CAPACITOR 300PF	
A5	3L		D40-0633-15	GEAR ASSY	
CN1,2			E04-0157-05	RF COAXIAL CABLE SOCKET	
CN3			E40-3239-05	PIN CONNECTOR (4P)	
CN4			E40-3240-05	PIN CONNECTOR (5P)	
CN5			E40-3238-05	PIN CONNECTOR (3P)	
CN6			E40-3237-05	PIN CONNECTOR (2P)	
CN7			E40-5068-05	PIN CONNECTOR (11P)	
CN101			E40-5066-05	PIN CONNECTOR (9P)	
–			F20-1081-04	INSULATING SHEET	
A1	2M		F11-1142-22	SHIELDING CASE	
A2	2M		F10-1401-23	SHIELDING PLATE	
A3	1M		F11-1143-14	SHIELDING COVER	
A4	2M		F11-1144-14	SHIELDING COVER	
A6	1M	*	F10-2192-04	SHIELDING COVER	
–			J61-0307-05	BAND	
L1			L39-0496-05	COIL	
L2			L39-0415-25	COIL	
L3-6			L40-1011-13	SMALL FIXED INDUCTOR	
L7-11			L40-1011-14	SMALL FIXED INDUCTOR	
L12-14			L40-1011-13	SMALL FIXED INDUCTOR	
L101-103			L40-1011-14	SMALL FIXED INDUCTOR	

Ref. No.	Address	New parts	Parts No.	Description	Destination
L105-108			L40-1011-14	SMALL FIXED INDUCTOR	
L109			L34-1276-15	COIL	
L110			L39-0479-05	COIL	
L111			L39-0495-05	COIL	
L112			L39-0494-15	COIL	
T110-112			L92-0117-05	TROIDAL CORE	
K	1M,2M		N87-3006-46	BRAZIER HEAD TAPTITE SCREW	
S	1M,2M		N88-3006-46	FLAT HEAD TAPTITE SCREW	
R1,2			RD14BB2E101J	RD 100 J 1/4W	
R3			RK73FB2A102J	CHIP R 1.0K J 1/10W	
R4			RD14BB2E560J	RD 56 J 1/4W	
R5,6			RK73FB2A181J	CHIP R 180 J 1/10W	
R7-10			RK73FB2A103J	CHIP R 10K J 1/10W	
R11			RK73FB2A563J	CHIP R 56K J 1/10W	
R12			RK73FB2A121J	CHIP R 120 J 1/10W	
R13			RK73FB2A101J	CHIP R 100 J 1/10W	
R14			RK73FB2A563J	CHIP R 56K J 1/10W	
R15			RK73FB2A121J	CHIP R 120 J 1/10W	
R16			RK73FB2A101J	CHIP R 100 J 1/10W	
R17			RK73FB2A330J	CHIP R 33 J 1/10W	
R18			RK73FB2A103J	CHIP R 10K J 1/10W	
R19			RK73FB2A330J	CHIP R 33 J 1/10W	
R20-23			RK73FB2A103J	CHIP R 10K J 1/10W	
R24,25			RD14BB2E100J	RD 10 J 1/4W	
R26-30			RK73FB2A103J	CHIP R 10K J 1/10W	
R31			RK73FB2A472J	CHIP R 4.7K J 1/10W	
R32			RK73FB2A103J	CHIP R 10K J 1/10W	
R33			RD14BB2E101J	RD 100 J 1/4W	
R34			RK73FB2A472J	CHIP R 4.7K J 1/10W	
VR101,102	3L		R01-3435-05	POTENTIOMETER 10K	
W12-17			R92-0679-05	CHIP R 0 OHM	
W18-28			R92-0670-05	CHIP R 0 OHM	
W29-31			R92-0679-05	CHIP R 0 OHM	
W32			R92-0670-05	CHIP R 0 OHM	
W34			R92-0670-05	CHIP R 0 OHM	
W35,36			R92-0679-05	CHIP R 0 OHM	
W37			R92-0670-05	CHIP R 0 OHM	
W40	2B	*	E33-1984-05	PROCESSED WIRE KIT (to FIL:CN4)	
W40	2B	*	E33-1984-05	PROCESSED WIRE KIT (to CONT:CN4)	
W40	2B	*	E33-1984-05	PROCESSED WIRE KIT (to RL:AT1)	
W40	2B	*	E33-1984-05	PROCESSED WIRE KIT (to RL:AT2)	
K1			S51-2407-05	RELAY	
K101-103			S76-0401-05	RELAY	
K105-108			S76-0401-05	RELAY	
M1,2	3L		T42-0453-05	DC MOTOR	
D1,2			1SS101	DIODE	
D3-8			1SS226	DIODE	
D10			1S1555	DIODE	
D101-103			1S1555	DIODE	
D105-108			1S1555	DIODE	
D109,110			RLS73	DIODE	
IC1			SN74S74N	IC (ONE SHOT MULTI)	
IC2,3			TC4066BP	IC (ANALOG/ DIGITAL SW)	
IC4,5			BA6109U2	IC (MOTOR DRIVER)	
IC6			NJM2903S	IC (DUAL COMPALATOR)	
IC7			MC78L05M	IC (VOLTAGE REGULATOR/ +5V)	

PARTS LSIT

AT UNIT (X53-3340-02)
CONTROL UNIT (X53-356X-XX)

Ref. No.	Address	New parts	Parts No.	Description			Destination
Q1,2			2SC2714(Y)	TRANSISTOR			
Q3			DTC114EK	DIGITAL TRANSISTOR			
Q4			2SA1204(Y)	TRANSISTOR			
Q5			DTC114EK	DIGITAL TRANSISTOR			
CONTROL UNIT (X53-356X-XX) 0-11 : K,P 0-21 : M 0-22 : M2 0-71 : X 2-71 : E 2-72 : E2 2-73 : E3 2-74 : E9							
C1,2			CK73GB1H102K	CHIP C	1000PF	K	
C3			C92-0044-05	CHIP-ELE	47UF	10WV	
C4			CK73GB1H102K	CHIP C	1000PF	K	
C5			C92-0032-05	CHIP-ELE	4.7UF	25WV	
C6,7			CK73GF1E104Z	CHIP C	0.10UF	Z	
C8			C92-0037-05	CHIP-ELE	10UF	16WV	
C9			C92-0032-05	CHIP-ELE	4.7UF	25WV	
C10,11			CK73GF1E104Z	CHIP C	0.10UF	Z	
C12			C92-0037-05	CHIP-ELE	10UF	16WV	
C13			C92-0032-05	CHIP-ELE	4.7UF	25WV	
C14,15			CK73GF1E104Z	CHIP C	0.10UF	Z	
C16			C92-0037-05	CHIP-ELE	10UF	16WV	
C17-41			CK73GB1H102K	CHIP C	1000PF	K	
C42			CK73GB1H103K	CHIP C	0.010UF	K	
C43,44			CK73GB1H102K	CHIP C	1000PF	K	
C45			C92-0044-05	CHIP-ELE	47UF	10WV	
C46,47			CK73GB1H103K	CHIP C	0.010UF	K	
C48,49			CC73GCH1H330J	CHIP C	33PF	J	
C50-54			CK73GB1H103K	CHIP C	0.010UF	K	
C55			C92-0044-05	CHIP-ELE	47UF	10WV	
C56,57			CK73GF1E104Z	CHIP C	0.10UF	Z	
C58			CK73GB1H103K	CHIP C	0.010UF	K	
C59			C92-0044-05	CHIP-ELE	47UF	10WV	
C60			CK73GB1H103K	CHIP C	0.010UF	K	
C61			C92-0044-05	CHIP-ELE	47UF	10WV	
C62-77			CC73GCH1H101J	CHIP C	100PF	J	
C78-80			CK73GB1H103K	CHIP C	0.010UF	K	
C81-88			CC73GCH1H101J	CHIP C	100PF	J	
C89-93			CK73GB1H103K	CHIP C	0.010UF	K	
C94-96			C92-0037-05	CHIP-ELE	10UF	16WV	
C97			C92-0044-05	CHIP-ELE	47UF	10WV	
C98-102			CK73GB1H103K	CHIP C	0.010UF	K	
C103,104			CC73GCH1H220J	CHIP C	22PF	J	
C105-107			CK73GB1H103K	CHIP C	0.010UF	K	
C108			C92-0044-05	CHIP-ELE	47UF	10WV	
C109,110			CK73GB1H103K	CHIP C	0.010UF	K	
C111-113			C92-0023-05	CHIP-ELE	1.0UF	50WV	
C114			CK73GB1H103K	CHIP C	0.010UF	K	
C115			C92-0023-05	CHIP-ELE	1.0UF	50WV	
C116,117			CK73GB1H103K	CHIP C	0.010UF	K	
C118-124			CK73GB1H102K	CHIP C	1000PF	K	
C125,126			CK73GB1H103K	CHIP C	0.010UF	K	
C127-141			CC73GCH1H101J	CHIP C	100PF	J	
C142-147			CK73GB1H102K	CHIP C	1000PF	K	
C148-150			CC73GCH1H101J	CHIP C	100PF	J	
C152			CC73GCH1H101J	CHIP C	100PF	J	
C153-175			CK73GB1H102K	CHIP C	1000PF	K	
C177-183			CK73GB1H102K	CHIP C	1000PF	K	
C184-187			CK73GB1H103K	CHIP C	0.010UF	K	
C188-223			CK73GB1H102K	CHIP C	1000PF	K	
C224,225			CC73GSL1H471J	CHIP C	470PF	J	

Ref. No.	Address	New parts	Parts No.	Description				Destination
C226,227			CK73GB1H103K	CHIP C	0.010UF	K		
C228,229			CK73GB1H102K	CHIP C	1000PF	K		
C230			CK73GB1H103K	CHIP C	0.010UF	K		
C231-233			CK73GB1H102K	CHIP C	1000PF	K		
C501-509			CK73GB1H103K	CHIP C	0.010UF	K		
C511-521			CK73GB1H103K	CHIP C	0.010UF	K		
C522			CK73GB1H102K	CHIP C	1000PF	K		
C523			CK73GF1E104Z	CHIP C	0.10UF	Z		
C601-604			CK73GB1H103K	CHIP C	0.010UF	K		
C605			CK73GF1E104Z	CHIP C	0.10UF	Z		
C606			CK73GB1H102K	CHIP C	1000PF	K		
401	1D		E23-0623-04	EARTH LUG				
CN1,2		*	E40-5744-05	FLAT CABLE CONNECTOR (20P)				
CN3			E40-3239-05	PIN CONNECTOR (4P)				
CN4		*	E40-5763-05	PIN CONNECTOR (12P)				
CN5		*	E40-5744-05	FLAT CABLE CONNECTOR (20P)				
CN6			E40-5761-05	FLAT CABLE CONNECTOR (26P)				
CN7		*	E40-5742-05	FLAT CABLE CONNECTOR (13P)				
CN8		*	E40-5739-05	FLAT CABLE CONNECTOR (10P)				
CN9,10		*	E40-5740-05	FLAT CABLE CONNECTOR (20P)				
CN11		*	E40-5744-05	FLAT CABLE CONNECTOR (20P)				
CN12			E02-2015-05	SOCKET FOR IC				
CN501		*	E40-5740-05	FLAT CABLE CONNECTOR (20P)				
CN601			E40-3251-05	PIN CONNECTOR (7P)				
J601			E06-0858-15	CYLINDRICAL RECEPTACLE (8P MIC)				
A1	3G	*	F01-1007-04	HEAT SINK				
402	3G		G02-0574-04	FLAT SPRING				
403	2A	*	J19-1570-05	HOLDER (BATT)				
L1-3			L40-4705-48	SMALL FIXED INDUCTOR (47UH)				
L4,5			L40-1292-18	SMALL FIXED INDUCTOR				
L6,7			L40-4705-48	SMALL FIXED INDUCTOR (47UH)				
L8			L40-1292-18	SMALL FIXED INDUCTOR				
L11-25			L40-4705-48	SMALL FIXED INDUCTOR (47UH)				
L26,27			L40-1005-48	SMALL FIXED INDUCTOR (10UH)				
L28			L40-4705-48	SMALL FIXED INDUCTOR (47UH)				
X1		*	L77-1589-05	CRYSTAL RESONATOR (11.0592MHZ)				
X2			L78-0325-05	RESONATOR (2.0MHZ)				
G	3G		N32-2606-46	FLAT HEAD MACHIN SCREW				
R1,2			RK73GB1J101J	CHIP R	100	J	1/16W	
R3,4			RK73GB1J102J	CHIP R	1.0K	J	1/16W	
R5			RK73GB1J101J	CHIP R	100	J	1/16W	
R6			RK73GB1J473J	CHIP R	47K	J	1/16W	
R7-9			RK73GB1J102J	CHIP R	1.0K	J	1/16W	
R10-28			RK73GB1J101J	CHIP R	100	J	1/16W	
R29			RK73GB1J105J	CHIP R	1.0M	J	1/16W	
R30-37			RK73GB1J101J	CHIP R	100	J	1/16W	
R39			RK73GB1J102J	CHIP R	1.0K	J	1/16W	
R40			RK73GB1J471J	CHIP R	470	J	1/16W	
R41			RK73GB1J103J	CHIP R	10K	J	1/16W	
R42			RK73GB1J222J	CHIP R	2.2K	J	1/16W	
R43,44			RK73GB1J104J	CHIP R	100K	J	1/16W	
R45			RK73GB1J472J	CHIP R	4.7K	J	1/16W	
R46			RK73GB1J102J	CHIP R	1.0K	J	1/16W	
R47			RK73GB1J473J	CHIP R	47K	J	1/16W	
R48			RK73GB1J102J	CHIP R	1.0K	J	1/16W	X

PARTS LIST

CONTROL UNIT (X53-356X-XX)

Ref. No.	Address	New parts	Parts No.	Description	Desti-nation
R49			RK73GB1J473J	CHIP R 47K J 1/16W	
R51			RK73GB1J473J	CHIP R 47K J 1/16W	
R52			RK73GB1J103J	CHIP R 10K J 1/16W	
R53			RK73GB1J102J	CHIP R 1.0K J 1/16W	E3E9M
R54			RK73GB1J473J	CHIP R 47K J 1/16W	
R55,56			RK73GB1J103J	CHIP R 10K J 1/16W	
R57			RK73GB1J102J	CHIP R 1.0K J 1/16W	EE2E3E9
R58			RK73GB1J473J	CHIP R 47K J 1/16W	
R59-68			RK73GB1J103J	CHIP R 10K J 1/16W	
R69			RK73GB1J102J	CHIP R 1.0K J 1/16W	E2MM2
R70			RK73GB1J473J	CHIP R 47K J 1/16W	
R71,72			RK73GB1J103J	CHIP R 10K J 1/16W	
R73			RK73GB1J102J	CHIP R 1.0K J 1/16W	E
R74			RK73GB1J473J	CHIP R 47K J 1/16W	
R75-85			RK73GB1J103J	CHIP R 10K J 1/16W	
R86,87			RK73GB1J472J	CHIP R 4.7K J 1/16W	
R88			RK73GB1J153J	CHIP R 15K J 1/16W	
R89			RK73GB1J334J	CHIP R 330K J 1/16W	
R90-92			RK73GB1J153J	CHIP R 15K J 1/16W	
R93			RK73GB1J103J	CHIP R 10K J 1/16W	
R94,95			RK73GB1J153J	CHIP R 15K J 1/16W	
R96			RK73GB1J105J	CHIP R 1.0M J 1/16W	
R97			RK73GB1J102J	CHIP R 1.0K J 1/16W	
R98			RK73GB1J473J	CHIP R 47K J 1/16W	
R99			RK73GB1J102J	CHIP R 1.0K J 1/16W	
R100-105			RK73GB1J105J	CHIP R 1.0M J 1/16W	
R107			RK73GB1J105J	CHIP R 1.0M J 1/16W	
R108-119			RK73GB1J104J	CHIP R 100K J 1/16W	
R120-130			RK73GB1J101J	CHIP R 100 J 1/16W	
R131			RK73GB1J102J	CHIP R 1.0K J 1/16W	
R132,133			RK73GB1J103J	CHIP R 10K J 1/16W	
R134-137			RK73GB1J101J	CHIP R 100 J 1/16W	
R138-140			RK73GB1J101J	CHIP R 100 J 1/16W	
R141-144			RK73GB1J102J	CHIP R 1.0K J 1/16W	
R145			RK73GB1J223J	CHIP R 22K J 1/16W	
R146,147			RK73GB1J473J	CHIP R 47K J 1/16W	
R148-150			RK73GB1J101J	CHIP R 100 J 1/16W	
R152-169			RK73GB1J101J	CHIP R 100 J 1/16W	
R170			RK73GB1J474J	CHIP R 470K J 1/16W	
R171			RK73GB1J102J	CHIP R 1.0K J 1/16W	
R172-177			RK73GB1J101J	CHIP R 100 J 1/16W	
R179-201			RK73GB1J101J	CHIP R 100 J 1/16W	
R202			RK73GB1J473J	CHIP R 47K J 1/16W	
R203-214			RK73GB1J101J	CHIP R 100 J 1/16W	
R215			RK73GB1J473J	CHIP R 47K J 1/16W	
R216-222			RK73GB1J101J	CHIP R 100 J 1/16W	
R223			RK73GB1J333J	CHIP R 33K J 1/16W	
R224			RK73GB1J101J	CHIP R 100 J 1/16W	
R225			RK73GB1J473J	CHIP R 47K J 1/16W	
R226			RK73GB1J104J	CHIP R 100K J 1/16W	
R227-234			RK73GB1J103J	CHIP R 10K J 1/16W	
R235-237			RK73GB1J102J	CHIP R 1.0K J 1/16W	
R238-240			RK73GB1J101J	CHIP R 100 J 1/16W	
R241			RK73GB1J473J	CHIP R 47K J 1/16W	
R242,243			RK73GB1J102J	CHIP R 1.0K J 1/16W	
R244			RK73GB1J101J	CHIP R 100 J 1/16W	KPMXE
R244			RK73GB1J101J	CHIP R 100 J 1/16W	E2E3E9
R245			RK73GB1J473J	CHIP R 47K J 1/16W	
R501-504			RK73GB1J473J	CHIP R 47K J 1/16W	

Ref. No.	Address	New parts	Parts No.	Description	Desti-nation
R505			RK73GB1J391J	CHIP R 390 J 1/16W	
R506			RK73GB1J271J	CHIP R 270 J 1/16W	
R507			RK73GB1J473J	CHIP R 47K J 1/16W	
R508			RK73GB1J391J	CHIP R 390 J 1/16W	
R509			RK73GB1J271J	CHIP R 270 J 1/16W	
R510			RK73GB1J391J	CHIP R 390 J 1/16W	
R511			RK73GB1J271J	CHIP R 270 J 1/16W	
R512			RK73GB1J391J	CHIP R 390 J 1/16W	
R513			RK73GB1J271J	CHIP R 270 J 1/16W	
R514			RK73GB1J473J	CHIP R 47K J 1/16W	
R515			RK73GB1J391J	CHIP R 390 J 1/16W	
R516			RK73GB1J271J	CHIP R 270 J 1/16W	
R517			RK73GB1J391J	CHIP R 390 J 1/16W	
R518			RK73GB1J271J	CHIP R 270 J 1/16W	
R519			RK73GB1J391J	CHIP R 390 J 1/16W	
R520			RK73GB1J271J	CHIP R 270 J 1/16W	
R521-523			RK73GB1J473J	CHIP R 47K J 1/16W	
R524			RK73GB1J102J	CHIP R 1.0K J 1/16W	
R525			RK73GB1J473J	CHIP R 47K J 1/16W	
R526-527			RK73GB1J101J	CHIP R 100 J 1/16W	
R528			RK73GB1J391J	CHIP R 390 J 1/16W	
R529			RK73GB1J271J	CHIP R 270 J 1/16W	
R530			RK73GB1J391J	CHIP R 390 J 1/16W	
R531			RK73GB1J271J	CHIP R 270 J 1/16W	
R532			RK73GB1J391J	CHIP R 390 J 1/16W	
R533			RK73GB1J271J	CHIP R 270 J 1/16W	
R534			RK73GB1J391J	CHIP R 390 J 1/16W	
R535			RK73GB1J271J	CHIP R 270 J 1/16W	
R536-539			RK73GB1J101J	CHIP R 100 J 1/16W	
R540			RK73GB1J473J	CHIP R 47K J 1/16W	
R541,542			RK73GB1J101J	CHIP R 100 J 1/16W	
R543-546			RK73GB1J473J	CHIP R 47K J 1/16W	
R547,548			RK73GB1J103J	CHIP R 10K J 1/16W	
R549-555			RK73GB1J473J	CHIP R 47K J 1/16W	
R556			RK73GB1J103J	CHIP R 10K J 1/16W	
S1			S62-0412-05	SLIDE SWITCH	
S501-545		*	S70-0439-05	TACT SWITCH	
S546-551		*	S70-0439-05	TACT SWITCH	
D1-3			1SS355	DIODE	
D4		*	RD7.5M(B3)	ZENER DIODE	
D5-12			1SS355	DIODE	
D501			B30-2036-05	LED (RED)	
D502		*	B30-2146-05	LED (ORANGE)	
D510-519		*	B30-2146-05	LED (ORANGE)	
IC1,2			UPC7805H	IC (VOLTAGE REGULATOR/ +5V)	
IC3			TA78L08F	IC (VOLTAGE REGULATOR)	
IC4			AT2402N10SI2.7	IC (2kbit SERIAL EEPROMM)	
IC5			MB3780A	IC (BATTERY BACKUP)	
IC6		*	M37702S4BFP	IC	
IC7			TC7S04F	IC (2CH NAND GATE)	
IC8			LC3564QMF-10	IC	
IC9			TC4052BF	IC (4CH MPX/DE-MPX)	
IC10			TC7S04F	IC (2CH NAND GATE)	
IC11		*	TC74VHC32F	IC	
IC12		*	27C512RJLVC	IC	
IC13			TC4052BF	IC (4CH MPX/DE-MPX)	
IC14		*	TC74VHC08F	IC	
IC15		*	TC74VHC245F	IC	

PARTS LSIT

CONTROL UNIT (X53-356X-XX)
TX-RX UNIT (X57-4620-00)

Ref. No.	Address	New parts	Parts No.	Description	Destination
IC16			CXD1095Q	IC (I/O EXPANDER)	
IC17,18		*	TC74VHC138F	IC	
IC19		*	TC74VHC573F	IC	
IC20,21			LZ92K371	IC (ENCODER PROCESSOR)	
IC22,23			CXD1095Q	IC (I/O EXPANDER)	
IC24		*	68HC05G2419553	IC	
IC25,26			TC4584BF	IC (BUFF)	
IC27		*	ADM232LAR	IC	
IC28			NJM2904M	IC (OP AMP X2)	
IC29			TC7S32F	IC (2CH NAND GATE)	
IC501-504			UPD6345GS	IC	
Q1			DTA143EK	DIGITAL TRANSISTOR	
Q2			DTC143EK	DIGITAL TRANSISTOR	
Q3,4			DTC114EK	DIGITAL TRANSISTOR	
Q5			DTC143EK	DIGITAL TRANSISTOR	
Q6-11			DTC114EK	DIGITAL TRANSISTOR	
Q12,13			DTA143EK	DIGITAL TRANSISTOR	
Q14-22			DTC143EK	DIGITAL TRANSISTOR	
Q23,24			DTA143EK	DIGITAL TRANSISTOR	
Q27,28			DTC114EK	DIGITAL TRANSISTOR	
Q29-31			DTC143TK	DIGITAL TRANSISTOR	
Q33			DTC143EK	DIGITAL TRANSISTOR	
Q501,502			DTC114EK	DIGITAL TRANSISTOR	

TX-RX UNIT (X57-4620-00)

C1			C90-2045-05	ELECTRO	2.2UF	25WV
C2,3			CK73FF1E104Z	CHIP C	0.10UF	Z
C4,5			CC73FCH1H330J	CHIP C	33PF	J
C6			C90-2045-05	ELECTRO	2.2UF	25WV
C7,8			CK73FF1E104Z	CHIP C	0.10UF	Z
C9-14			CC73FCH1H330J	CHIP C	33PF	J
C15			CC73FSL1H152J	CHIP C	1500PF	J
C16			CC73FCH1H101J	CHIP C	100PF	J
C17			CC73FSL1H152J	CHIP C	1500PF	J
C18			CC73FCH1H101J	CHIP C	100PF	J
C19-22			CK73FF1E104Z	CHIP C	0.10UF	Z
C23			C90-2045-05	ELECTRO	2.2UF	25WV
C24			CK73FB1H223K	CHIP C	0.022UF	K
C25			CK73FF1E104Z	CHIP C	0.10UF	Z
C26,27			CK73FB1H223K	CHIP C	0.022UF	K
C28			C90-2045-05	ELECTRO	2.2UF	25WV
C29			CK73FF1E104Z	CHIP C	0.10UF	Z
C30			CK73GB1H102K	CHIP C	1000PF	K
C31			CK73FB1H471K	CHIP C	470PF	K
C32			CK73FF1E104Z	CHIP C	0.10UF	Z
C33			CK73GB1H102K	CHIP C	1000PF	K
C34			C90-2045-05	ELECTRO	2.2UF	25WV
C36			CC73GCH1H330J	CHIP C	33PF	J
C37			CK73GB1H102K	CHIP C	1000PF	K
C38			CK73GB1H103K	CHIP C	0.010UF	K
C39,40			CK73FB1H102K	CHIP C	1000PF	K
C41			C90-2045-05	ELECTRO	2.2UF	25WV
C42			CK73FB1H103K	CHIP C	0.010UF	K
C44			CK73GB1H102K	CHIP C	1000PF	K
C45			CC73FCH1H121J	CHIP C	120PF	J
C46			CK73GB1H102K	CHIP C	1000PF	K
C50			CK73GB1H102K	CHIP C	1000PF	K

Ref. No.	Address	New parts	Parts No.	Description			Destination
C52			CE04EW1C470M	ELECTRO	47UF	16WV	
C53			CK73GB1E223K	CHIP C	0.022UF	K	
C54			CQ92M1H154K	MYLAR	0.15UF	K	
C55			CK73FB1H102K	CHIP C	1000PF	K	
C56			CE04EW1C101M	ELECTRO	100UF	16WV	
C57			CC73ECH1H202J	CHIP C	2000PF	J	
C58			CK73FB1H103K	CHIP C	0.010UF	K	
C59			CC73GCH1H680J	CHIP C	68PF	J	
C60			CC73GCH1H180J	CHIP C	18PF	J	
C61			CC73GCH1H060D	CHIP C	6.0PF	D	
C62			CC73GCH1H470J	CHIP C	47PF	J	
C63			CK73GB1H103K	CHIP C	0.010UF	K	
C64			CE04EW1C101M	ELECTRO	100UF	16WV	
C65,66			CK73GB1H102K	CHIP C	1000PF	K	
C67			CE04EW1C470M	ELECTRO	47UF	16WV	
C68,69			CK73GB1H102K	CHIP C	1000PF	K	
C100			CE04EW1C100M	ELECTRO	10UF	16WV	
C101			CK73FF1E104Z	CHIP C	0.10UF	Z	
C103			CE04EW1H010M	ELECTRO	1.0UF	50WV	
C104			CE04EW1C100M	ELECTRO	10UF	16WV	
C105			CK73GB1H102K	CHIP C	1000PF	K	
C106			CC73FCH1H102J	CHIP C	1000PF	J	
C107			CK73FF1E104Z	CHIP C	0.10UF	Z	
C108			CE04EW1C100M	ELECTRO	10UF	16WV	
C109			CK73FF1E104Z	CHIP C	0.10UF	Z	
C112			CC73FCH1H102J	CHIP C	1000PF	J	
C113,114			CQ92FM1H223K	MYLAR	0.022UF	K	
C116			CC73FCH1H102J	CHIP C	1000PF	J	
C118,119			CC73GCH1H271J	CHIP C	270PF	J	
C120			CE04EW1C100M	ELECTRO	10UF	16WV	
C121			CE04EW1H010M	ELECTRO	1.0UF	50WV	
C122			CC73FSL1H152J	CHIP C	1500PF	J	
C123			CC73GCH1H101J	CHIP C	100PF	J	
C124			CC73GCH1H221J	CHIP C	220PF	J	
C125			CK73GB1E223K	CHIP C	0.022UF	K	
C126			CE04EW1C100M	ELECTRO	10UF	16WV	
C127			CK73GB1H103K	CHIP C	0.010UF	K	
C128			CC73FSL1H221J	CHIP C	220PF	J	
C129			CC73FCH1H101J	CHIP C	100PF	J	
C130			CE04EW1C100M	ELECTRO	10UF	16WV	
C131			CK73FF1E104Z	CHIP C	0.10UF	Z	
C132			CE04EW1C100M	ELECTRO	10UF	16WV	
C133			CC73GCH1H101J	CHIP C	100PF	J	
C134			CK73GB1E223K	CHIP C	0.022UF	K	
C135			CE04EW1C100M	ELECTRO	10UF	16WV	
C136			CK73GB1E223K	CHIP C	0.022UF	K	
C137			CC73FCH1H102J	CHIP C	1000PF	J	
C138			CC73GCH1H221J	CHIP C	220PF	J	
C139			CC73GCH1H271J	CHIP C	270PF	J	
C140,141			CK73GB1E223K	CHIP C	0.022UF	K	
C142			CE04EW1C100M	ELECTRO	10UF	16WV	
C143			CK73GB1E223K	CHIP C	0.022UF	K	
C144		*	CQ92FM1H683K	MYLAR	0.068UF	K	
C145			CK73FB1E104K	CHIP C	0.10UF	K	
C146,147			CC73FCH1H102J	CHIP C	1000PF	J	
C150			CK73GB1E223K	CHIP C	0.022UF	K	
C151			CE04EW1C100M	ELECTRO	10UF	16WV	
C152			CC73FCH1H102J	CHIP C	1000PF	J	
C153			CC73GCH1H271J	CHIP C	270PF	J	

PARTS LIST

TX-RX UNIT (X57-4620-00)

Ref. No.	Address	New parts	Parts No.	Description			Destination
C154			CK73GB1E223K	CHIP C	0.022UF	K	
C155			CE04EW1C100M	ELECTRO	10UF	16WV	
C156			CK73FF1E104Z	CHIP C	0.10UF	Z	
C157			CK73GB1E223K	CHIP C	0.022UF	K	
C158			C90-2045-05	ELECTRO	2.2UF	25WV	
C159,160			CK73FF1E104Z	CHIP C	0.10UF	Z	
C161			CK73GB1E223K	CHIP C	0.022UF	K	
C162			CE04EW1C100M	ELECTRO	10UF	16WV	
C163			CK73FF1E104Z	CHIP C	0.10UF	Z	
C164			CE04EW1C100M	ELECTRO	10UF	16WV	
C165			CK73FF1E104Z	CHIP C	0.10UF	Z	
C166,167			CE04EW1C100M	ELECTRO	10UF	16WV	
C168,169			CK73FF1E104Z	CHIP C	0.10UF	Z	
C170			CK73GB1H103K	CHIP C	0.010UF	K	
C171-176			CE04EW1C100M	ELECTRO	10UF	16WV	
C177			CQ92M1H103K	MYLAR	0.010UF	K	
C178,179			CC73FSL1H152J	CHIP C	1500PF	J	
C180,181			CC73ECH1H202J	CHIP C	2000PF	J	
C182			CC73GCH1H331J	CHIP C	330PF	J	
C183-185			CC73FSL1H152J	CHIP C	1500PF	J	
C186			CE04EW1C100M	ELECTRO	10UF	16WV	
C187			CC73GCH1H331J	CHIP C	330PF	J	
C188			CK73GB1H562K	CHIP C	5600PF	K	
C189			CE04EW1C100M	ELECTRO	10UF	16WV	
C190			CC73GCH1H331J	CHIP C	330PF	J	
C191,192			CE04NW1C100M	ELECTRO	10UF	16WV	
C193			CK73GB1H103K	CHIP C	0.010UF	K	
C194			CE04NW1C100M	ELECTRO	10UF	16WV	
C195			CE04EW1H010M	ELECTRO	1.0UF	50WV	
C196,197			CE04NW1C100M	ELECTRO	10UF	16WV	
C198			CE04EW1C100M	ELECTRO	10UF	16WV	
C199,200			CE04NW1C220M	ELECTRO	22UF	16WV	
C201,202			CK73GF1E104Z	CHIP C	0.10UF	Z	
C203,204			CE04NW1E4R7M	ELECTRO	4.7UF	25WV	
C205			CE04EW1C100M	ELECTRO	10UF	16WV	
C206,207			CK73GF1E104Z	CHIP C	0.10UF	Z	
C208			CK73GB1E223K	CHIP C	0.022UF	K	
C209,210			CE04NW1C100M	ELECTRO	10UF	16WV	
C212,213			CE04NW1H010M	ELECTRO	1.0UF	50WV	
C214			CK73GB1H472K	CHIP C	4700PF	K	
C215,216			CE04EW1C100M	ELECTRO	10UF	16WV	
C218,219			CK73EF1E474Z	CHIP C	0.47UF	Z	
C221,222			CK73FB1H102K	CHIP C	1000PF	K	
C223			CE04EW1C471M	ELECTRO	470UF	16WV	
C224			CE04EW1C100M	ELECTRO	10UF	16WV	
C225			CE04EW1C470M	ELECTRO	47UF	16WV	
C226			CE04EW1C101M	ELECTRO	100UF	16WV	
C227			CE04EW1C100M	ELECTRO	10UF	16WV	
C228			CE04EW1C101M	ELECTRO	100UF	16WV	
C229			CE04EW1C100M	ELECTRO	10UF	16WV	
C230			CE04EW1C471M	ELECTRO	470UF	16WV	
C231,232			CK73EF1E474Z	CHIP C	0.47UF	Z	
C233			CQ92M1H154K	MYLAR	0.15UF	K	
C235,236			CK73FB1H102K	CHIP C	1000PF	K	
C237			CE04EW1E471M	ELECTRO	470UF	25WV	
C240			CC73FSL1H152J	CHIP C	1500PF	J	
C241			CE04EW1H010M	ELECTRO	1.0UF	50WV	
C300,301			CC73FCH1H101J	CHIP C	100PF	J	
C302			CC73GCH1H101J	CHIP C	100PF	J	

Ref. No.	Address	New parts	Parts No.	Description			Destination
C303,304			CC73FCH1H101J	CHIP C	100PF	J	
C305			CC73GCH1H101J	CHIP C	100PF	J	
C306,307			CC73FCH1H101J	CHIP C	100PF	J	
C308			CC73GCH1H101J	CHIP C	100PF	J	
C309,310			CC73FCH1H101J	CHIP C	100PF	J	
C312,313			CC73FCH1H101J	CHIP C	100PF	J	
C314			CC73GCH1H101J	CHIP C	100PF	J	
C315			CC73FCH1H101J	CHIP C	100PF	J	
C316-320			CK73FB1H102K	CHIP C	1000PF	K	
C321			CC73FSL1H471J	CHIP C	470PF	J	
C326,327			CK73GB1H102K	CHIP C	1000PF	K	
C330-333			CK73FB1H102K	CHIP C	1000PF	K	
C334			CK73GB1E223K	CHIP C	0.022UF	K	
C335			CC73GCH1H331J	CHIP C	330PF	J	
C336-340			CK73GB1E223K	CHIP C	0.022UF	K	
C341			CK73FF1E104Z	CHIP C	0.10UF	Z	
C342			CC73FSL1H152J	CHIP C	1500PF	J	
C343			CK73FB1H562K	CHIP C	5600PF	K	
C344			CK73GB1H472K	CHIP C	4700PF	K	
C345			CK73GB1E223K	CHIP C	0.022UF	K	
C346-348			CC73FCH1H101J	CHIP C	100PF	J	
C349,350			CK73FF1E104Z	CHIP C	0.10UF	Z	
C351			CK73GB1E223K	CHIP C	0.022UF	K	
C355			CE04NW1C100M	ELECTRO	10UF	16WV	
C356			CE04EW1HR47M	ELECTRO	0.47UF	50WV	
C357			CE04EW1C100M	ELECTRO	10UF	16WV	
C358-361			CK73FB1H103K	CHIP C	0.010UF	K	
C363			CK73GB1H103K	CHIP C	0.010UF	K	
C364			C90-2045-05	ELECTRO	2.2UF	25WV	
C365-375			CK73FB1H471K	CHIP C	470PF	K	
C376			CK73GB1E223K	CHIP C	0.022UF	K	
C377-379			CK73FB1H471K	CHIP C	470PF	K	
C381,382			CK73FB1H103K	CHIP C	0.010UF	K	
C383			CK73GB1H102K	CHIP C	1000PF	K	
C384			CK73FB1H102K	CHIP C	1000PF	K	
C385			CK73GB1H103K	CHIP C	0.010UF	K	
C386			CK73FB1H103K	CHIP C	0.010UF	K	
C387			CK73GB1H103K	CHIP C	0.010UF	K	
C388			CK73FB1H471K	CHIP C	470PF	K	
C389,390			CK73GB1H471K	CHIP C	470PF	K	
C391-394			CK73FB1H103K	CHIP C	0.010UF	K	
C395			CK73GB1H103K	CHIP C	0.010UF	K	
C400			CC73FSL1H471J	CHIP C	470PF	J	
C401			CK73FB1H103K	CHIP C	0.010UF	K	
C402			C90-2167-05	ELECTRO	100UF	16WV	
CN1			E40-3239-05	PIN CONNECTOR (4P)			
CN3			E40-3239-05	PIN CONNECTOR (4P)			
CN4			E40-3242-05	PIN CONNECTOR (7P)			
CN5		*	E40-5747-05	PIN CONNECTOR (11P)			
CN6			E40-3243-05	PIN CONNECTOR (8P)			
CN7			E40-5736-05	FLAT CABLE CONNECTOR (26P)			
CN8		*	E40-5740-05	FLAT CABLE CONNECTOR (20P)			
CN9			E40-3240-05	PIN CONNECTOR (5P)			
CN10			E40-3238-05	PIN CONNECTOR (3P)			
CN11		*	E40-5741-05	FLAT CABLE CONNECTOR (8P)			
CN12			E40-3237-05	PIN CONNECTOR (2P)			
CN13			E04-0191-05	RF COAXIAL CABLE SOCKET			
CN14-16			E02-2015-05	SOCKET FOR IC			
CN17			E40-5067-05	PIN CONNECTOR (10P)			

PARTS LSIT

TX-RX UNIT (X57-4620-00)

Ref. No.	Address	New parts	Parts No.	Description	Destination
J1			E11-0455-05	PHONE JACK (3.5D)	
J2			E11-0431-05	PHONE JACK	
J4			E63-0401-05	PHONO JACK	
J5			E06-1352-05	DIN SOCKET	
J6			E11-0455-05	PHONE JACK (3.5D)	
J7		*	E58-0428-05	SUB PLUG (D) 9P	
W1		*	E37-0536-05	LEAD WIRE WITH MINIPIN PLUG	
A1	4G	*	F01-1005-04	HEAT SINK	
A2	4F		F11-1127-04	SHIELDING CASE	
A3,4	4G		G02-0574-04	FLAT SPRING	
A5	4G		G02-0719-04	FLAT SPRING	
CF1,2			L72-0374-05	CERAMIC FILTER (455KHZ)	
CF3			L72-0366-05	CERAMIC FILTER (455KHZ)	
L1			L40-2285-48	SMALL FIXED INDUCTOR (220NH)	
L2			L40-4785-48	SMALL FIXED INDUCTOR	
L3			L40-1011-15	SMALL FIXED INDUCTOR	
L4		*	L34-4397-05	COIL	
L5			L40-1011-15	SMALL FIXED INDUCTOR	
L8		*	L40-4711-15	SMALL FIXED INDUCTOR	
L9			L40-1011-15	SMALL FIXED INDUCTOR	
L10			L40-1092-12	SMALL FIXED INDUCTOR	
L11,17			L40-1011-15	SMALL FIXED INDUCTOR	
L18			L40-1001-15	SMALL FIXED INDUCTOR	
L19,20		*	L39-1245-05	COIL	
L21		*	L40-2711-33	SMALL FIXED INDUCTOR	
L22,23			L40-2201-12	SMALL FIXED INDUCTOR	
L24,25			L40-1092-12	SMALL FIXED INDUCTOR	
L26			L40-1001-15	SMALL FIXED INDUCTOR	
R1			RK73FB2A103J	CHIP R 10K J 1/10W	
R2,3			RK73GB1J103J	CHIP R 10K J 1/16W	
R4,6			RK73GB1J101J	CHIP R 100 J 1/16W	
R7			RK73FB2A103J	CHIP R 10K J 1/10W	
R8			RK73GB1J682J	CHIP R 6.8K J 1/16W	
R9			RK73GB1J222J	CHIP R 2.2K J 1/16W	
R10			RK73GB1J330J	CHIP R 33 J 1/16W	
R11			RK73GB1J183J	CHIP R 18K J 1/16W	
R12			RK73FB2A103J	CHIP R 10K J 1/10W	
R13			RK73GB1J101J	CHIP R 100 J 1/16W	
R16			RK73GB1J680J	CHIP R 68 J 1/16W	
R14,15			RK73FB2A222J	CHIP R 2.2K J 1/10W	
R17			RK73GB1J101J	CHIP R 100 J 1/16W	
R21-24			RK73FB2A103J	CHIP R 10K J 1/10W	
R50			RK73GB1J682J	CHIP R 6.8K J 1/16W	
R51			RK73FB2A104J	CHIP R 100K J 1/10W	
R52			RK73GB1J392J	CHIP R 3.9K J 1/16W	
R53			RK73GB1J221J	CHIP R 220 J 1/16W	
R54			RK73GB1J152J	CHIP R 1.5K J 1/16W	
R55,56			RK73GB1J103J	CHIP R 10K J 1/16W	
R57			RK73GB1J334J	CHIP R 330K J 1/16W	
R58			RK73GB1J470J	CHIP R 47 J 1/16W	
R59			RK73GB1J151J	CHIP R 150 J 1/16W	
R60			RK73GB1J152J	CHIP R 1.5K J 1/16W	
R61			RK73GB1J333J	CHIP R 33K J 1/16W	
R62			RK73GB1J223J	CHIP R 22K J 1/16W	
R63			RK73GB1J102J	CHIP R 1.0K J 1/16W	
R64,65			RK73GB1J470J	CHIP R 47 J 1/16W	
R66			RK73GB1J221J	CHIP R 220 J 1/16W	

Ref. No.	Address	New parts	Parts No.	Description	Destination
R100			RK73FB2A100J	CHIP R 10 J 1/10W	
R101			RK73GB1J472J	CHIP R 4.7K J 1/16W	
R103			RK73GB1J102J	CHIP R 1.0K J 1/16W	
R104			RK73GB1J472J	CHIP R 4.7K J 1/16W	
R105			RK73GB1J102J	CHIP R 1.0K J 1/16W	
R106			RK73GB1J154J	CHIP R 150K J 1/16W	
R109			RK73GB1J102J	CHIP R 1.0K J 1/16W	
R110			RK73GB1J223J	CHIP R 22K J 1/16W	
R111			RK73GB1J222J	CHIP R 2.2K J 1/16W	
R113			RK73GB1J104J	CHIP R 100K J 1/16W	
R114			RK73GB1J472J	CHIP R 4.7K J 1/16W	
R117			RK73GB1J823J	CHIP R 82K J 1/16W	
R118			RK73GB1J222J	CHIP R 2.2K J 1/16W	
R119,120			RK73GB1J223J	CHIP R 22K J 1/16W	
R121,122			RK73GB1J123J	CHIP R 12K J 1/16W	
R123			RK73GB1J223J	CHIP R 22K J 1/16W	
R124			RK73GB1J103J	CHIP R 10K J 1/16W	
R126			RK73GB1J183J	CHIP R 18K J 1/16W	
R127,128			RK73GB1J103J	CHIP R 10K J 1/16W	
R129			RK73GB1J472J	CHIP R 4.7K J 1/16W	
R130			RK73GB1J223J	CHIP R 22K J 1/16W	
R131			RK73GB1J101J	CHIP R 100 J 1/16W	
R132			RK73GB1J472J	CHIP R 4.7K J 1/16W	
R133			RK73GB1J103J	CHIP R 10K J 1/16W	
R134,135			RK73GB1J152J	CHIP R 1.5K J 1/16W	
R136			RK73GB1J331J	CHIP R 330 J 1/16W	
R137			RK73FB2A102J	CHIP R 1.0K J 1/10W	
R138			RK73GB1J152J	CHIP R 1.5K J 1/16W	
R139			RK73GB1J223J	CHIP R 22K J 1/16W	
R140			RK73GB1J470J	CHIP R 47 J 1/16W	
R141			RK73GB1J392J	CHIP R 3.9K J 1/16W	
R142,143			RK73GB1J222J	CHIP R 2.2K J 1/16W	
R144			RK73GB1J101J	CHIP R 100 J 1/16W	
R145			RK73GB1J472J	CHIP R 4.7K J 1/16W	
R146,147			RK73GB1J101J	CHIP R 100 J 1/16W	
R148			RK73GB1J471J	CHIP R 470 J 1/16W	
R149			RK73GB1J101J	CHIP R 100 J 1/16W	
R150			RK73GB1J471J	CHIP R 470 J 1/16W	
R151			RK73GB1J472J	CHIP R 4.7K J 1/16W	
R152			RK73GB1J152J	CHIP R 1.5K J 1/16W	
R153,154			RK73GB1J331J	CHIP R 330 J 1/16W	
R155			RK73GB1J222J	CHIP R 2.2K J 1/16W	
R156			RK73GB1J332J	CHIP R 3.3K J 1/16W	
R157			RK73GB1J222J	CHIP R 2.2K J 1/16W	
R158,159			RK73GB1J472J	CHIP R 4.7K J 1/16W	
R160			RK73GB1J103J	CHIP R 10K J 1/16W	
R161			RK73GB1J222J	CHIP R 2.2K J 1/16W	
R162,163			RK73GB1J331J	CHIP R 330 J 1/16W	
R164			RK73GB1J222J	CHIP R 2.2K J 1/16W	
R165			RK73GB1J331J	CHIP R 330 J 1/16W	
R166			RK73GB1J392J	CHIP R 3.9K J 1/16W	
R167			RK73GB1J472J	CHIP R 4.7K J 1/16W	
R168			RK73GB1J100J	CHIP R 10 J 1/16W	
R169			RK73GB1J471J	CHIP R 470 J 1/16W	
R170			RK73GB1J101J	CHIP R 100 J 1/16W	
R171,172			RK73FB2A100J	CHIP R 10 J 1/10W	
R173			RK73GB1J101J	CHIP R 100 J 1/16W	
R174			RK73GB1J123J	CHIP R 12K J 1/16W	
R175			RK73FB2A123J	CHIP R 12K J 1/10W	

PARTS LIST

TX-RX UNIT (X57-4620-00)

Ref. No.	Address	New parts	Parts No.	Description	Destination
R176			RK73FB2A183J	CHIP R 18K J 1/10W	
R177			RK73GB1J183J	CHIP R 18K J 1/16W	
R178			RK73FB2A153J	CHIP R 15K J 1/10W	
R179			RK73GB1J103J	CHIP R 10K J 1/16W	
R180			RK73GB1J821J	CHIP R 820 J 1/16W	
R181			RK73GB1J222J	CHIP R 2.2K J 1/16W	
R182			RK73GB1J103J	CHIP R 10K J 1/16W	
R183			RK73FB2A153J	CHIP R 15K J 1/10W	
R184			RK73GB1J272J	CHIP R 2.7K J 1/16W	
R185			RK73GB1J153J	CHIP R 15K J 1/16W	
R186			RK73FB2A222J	CHIP R 2.2K J 1/10W	
R187			RK73GB1J223J	CHIP R 22K J 1/16W	
R188			RK73GB1J101J	CHIP R 100 J 1/16W	
R189,190			RK73GB1J153J	CHIP R 15K J 1/16W	
R191,192			RK73GB1J222J	CHIP R 2.2K J 1/16W	
R193,194			RK73GB1J223J	CHIP R 22K J 1/16W	
R196			RK73FB2A472J	CHIP R 4.7K J 1/10W	
R197			RK73GB1J103J	CHIP R 10K J 1/16W	
R198,199			RK73GB1J104J	CHIP R 100K J 1/16W	
R200			RK73FB2A101J	CHIP R 100 J 1/10W	
R201			RK73GB1J221J	CHIP R 220 J 1/16W	
R202,203			RK73GB1J104J	CHIP R 100K J 1/16W	
R204			RK73GB1J222J	CHIP R 2.2K J 1/16W	
R205			RK73GB1J272J	CHIP R 2.7K J 1/16W	
R206			RK73GB1J224J	CHIP R 220K J 1/16W	
R207			RK73GB1J222J	CHIP R 2.2K J 1/16W	
R208			RK73GB1J123J	CHIP R 12K J 1/16W	
R209			RK73GB1J563J	CHIP R 56K J 1/16W	
R215			RK73GB1J681J	CHIP R 680 J 1/16W	
R220			RK73GB1J103J	CHIP R 10K J 1/16W	
R300			RK73FB2A100J	CHIP R 10 J 1/10W	
R301			RK73GB1J101J	CHIP R 100 J 1/16W	
R303-319			RK73GB1J101J	CHIP R 100 J 1/16W	
R320			RK73GB1J102J	CHIP R 1.0K J 1/16W	
R323			RK73GB1J101J	CHIP R 100 J 1/16W	
R325			RK73FB2A473J	CHIP R 47K J 1/10W	
R330			RK73GB1J470J	CHIP R 47 J 1/16W	
R331			RK73GB1J102J	CHIP R 1.0K J 1/16W	
R332			RK73GB1J222J	CHIP R 2.2K J 1/16W	
R334			RK73GB1J331J	CHIP R 330 J 1/16W	
R335			RK73GB1J101J	CHIP R 100 J 1/16W	
R336			RK73GB1J102J	CHIP R 1.0K J 1/16W	
R337,338			RK73GB1J124J	CHIP R 120K J 1/16W	
R339,340			RK73GB1J334J	CHIP R 330K J 1/16W	
R343			RK73GB1J471J	CHIP R 470 J 1/16W	
R344			RK73FB2A2R2J	CHIP R 2.2 J 1/10W	
R345-347			RK73GB1J101J	CHIP R 100 J 1/16W	
R348,349			RK73GB1J473J	CHIP R 47K J 1/16W	
R350,351			RK73FB2A473J	CHIP R 47K J 1/10W	
R352-354			RK73GB1J473J	CHIP R 47K J 1/16W	
R355			RK73GB1J103J	CHIP R 10K J 1/16W	
R356			RK73GB1J473J	CHIP R 47K J 1/16W	
R357			RK73GB1J103J	CHIP R 10K J 1/16W	
R358			RK73GB1J473J	CHIP R 47K J 1/16W	
R359			RK73GB1J101J	CHIP R 100 J 1/16W	
R364,365			RK73GB1J222J	CHIP R 2.2K J 1/16W	
R366			R92-1252-05	CHIP R 0 OHM	
R367,368			RK73FB2A473J	CHIP R 47K J 1/10W	
R369			RK73GB1J473J	CHIP R 47K J 1/16W	

Ref. No.	Address	New parts	Parts No.	Description	Destination
R371-374			RK73GB1J473J	CHIP R 47K J 1/16W	
R376			RK73GB1J473J	CHIP R 47K J 1/16W	
R377,378			RK73FB2A473J	CHIP R 47K J 1/10W	
R379			RK73GB1J473J	CHIP R 47K J 1/16W	
R380-418			RK73FB2A103J	CHIP R 10K J 1/10W	
R419-428			RK73GB1J101J	CHIP R 100 J 1/16W	
R429			RK73FB2A103J	CHIP R 10K J 1/10W	
R430			RK73GB1J472J	CHIP R 4.7K J 1/16W	
R431,432			RK73GB1J103J	CHIP R 10K J 1/16W	
R433			RK73GB1J102J	CHIP R 1.0K J 1/16W	
R434			RK73GB1J470J	CHIP R 47 J 1/16W	
R435,436			RK73GB1J472J	CHIP R 4.7K J 1/16W	
VR1,2			R12-6732-05	TRIMMING POT. 470	
VR3			R12-6742-05	TRIMMING POT. 22K	
D1-4			RLS73	DIODE	
D5			1SV166	DIODE	
D7			DAP202K	DIODE	
D8			RLS73	DIODE	
IC1,2		*	DSP56002FC40	IC	
IC3		*	MBCG24173-6173	IC (GATE ARRAY)	
IC4		*	27C256PCJJTC-K	IC	
IC5		*	27C256PCJJUC-K	IC	
IC6		*	27C256PCJJVC-K	IC	
IC7		*	MCM56824AFN20	IC	
IC7		*	MCM56824AFN25	IC	
IC9		*	7032LC44JLQA	IC	
IC15			MB86001PF	IC	
IC16			AK4318-VS	IC	
IC17			NJM2100M	IC (OP AMPLIFIER)	
IC18			MC74HC4053F	IC (ANALOG SW)	
IC19-21			NJM4560M	IC (OP AMP X2)	
IC22		*	AD822AR	IC	
IC23			MC74HC4052F	IC (HPF)	
IC24			NJM2100M	IC (OP AMPLIFIER)	
IC25			AK5340-VS	IC (AD CONVERTER (18 Bit))	
IC26			M62363FP	IC (8bit D/A CONVERTER)	
IC27			AK4318-VS	IC	
IC28			NJM2100M	IC (OP AMPLIFIER)	
IC29			M51131L	IC (ELECTRO VOLUME)	
IC30			NJM2100M	IC (OP AMPLIFIER)	
IC31			M51131L	IC (ELECTRO VOLUME)	
IC33			LA4422	IC (AF POWER AMP/ 5.8W)	
IC34			PCM69AU	IC (18bit D/A CONVERTOR)	
IC35		*	AD822AR	IC	
IC36			NJM4560M	IC (OP AMP X2)	
IC37,38			UPC7805H	IC (VOLTAGE REGULATOR/ +5V)	
IC39			NJM78L05UA	IC (VOLTAGE REGULATOR/ +5V)	
IC40			NJM78L08UA	IC (VOLTAGE REGULATOR/ +8V)	
IC41,42			NJM3404AM	IC (OP AMP X2)	
IC43			NJM5532M	IC (OP AMP)	
IC44			TC7S04F	IC (2CH NAND GATE)	
Q1			DTC124EK	DIGITAL TRANSISTOR	
Q2,3			2SC2714(Y)	TRANSISTOR	
Q4			DTC124EK	DIGITAL TRANSISTOR	
Q5-7			2SC3324(G)	TRANSISTOR	
Q8			2SK210(GR)	FET	
Q9,10			2SC2714(Y)	TRANSISTOR	
Q12			2SC2712(Y)	TRANSISTOR	
Q13-17			2SC2412K(S)	TRANSISTOR	

PARTS LSIT

TX-RX UNIT (X57-4620-00)
VCO2 (X58-3390-03)

Ref. No.	Address	New parts	Parts No.	Description	Destination
Q22			DTC124EK	DIGITAL TRANSISTOR	
Q23			2SC2712(Y)	TRANSISTOR	
Q25			DTA143EK	DIGITAL TRANSISTOR	
Q26			DTC124XK	DIGITAL TRANSISTOR	
Q27			DTC143EK	DIGITAL TRANSISTOR	
VCO2 (X58-3390-03)					
-			B42-2437-04	S/NO LABEL	
C1			CK73FB1H102K	CHIP C 1000PF K	
C2			CC73FSL1H101J	CHIP C 100PF J	
C3			CC73FCH1H070D	CHIP C 7.0PF D	
C4			CC73FCH1H070D	CHIP C 7.0PF D	
C4			CC73FCH1H220J	CHIP C 22PF J	
C6			CC73FCH1H180J	CHIP C 18PF J	
C7			CC73FCH1H120J	CHIP C 12PF J	
C8,9			CK73FB1H102K	CHIP C 1000PF K	
C10			CC73FCH1H010C	CHIP C 1.0PF C	
C11			CK73FB1H102K	CHIP C 1000PF K	
TC1			C05-0331-15	TRIMMER CAPACITOR 10PF	
TP1-3			E23-0464-05	TERMINAL	
-			F11-1085-04	SHIELDING CASE	
			F11-1086-14	SHIELDING COVER	
-			G13-0904-04	CUSHION (COVER)	
L1			L33-0690-05	CHOKE COIL (3.3UH)	
L2			L34-2353-05	COIL	
T	2F		N30-2604-41	PAN HEAD MACHIN SCREW	
R1			RK73FB2A682J	CHIP R 6.8K J 1/10W	
R2			RK73FB2A271J	CHIP R 270 J 1/10W	
R3			RK73FB2A330J	CHIP R 33 J 1/10W	
R4,5			RK73FB2A472J	CHIP R 4.7K J 1/10W	
R6			RK73FB2A471J	CHIP R 470 J 1/10W	
R7			RK73FB2A560J	CHIP R 56 J 1/10W	
D1			1SV164	DIODE	
Q1			2SK508NV(K52)	FET	
Q2			2SC2714(Y)	TRANSISTOR	

EXPLODED VIEW

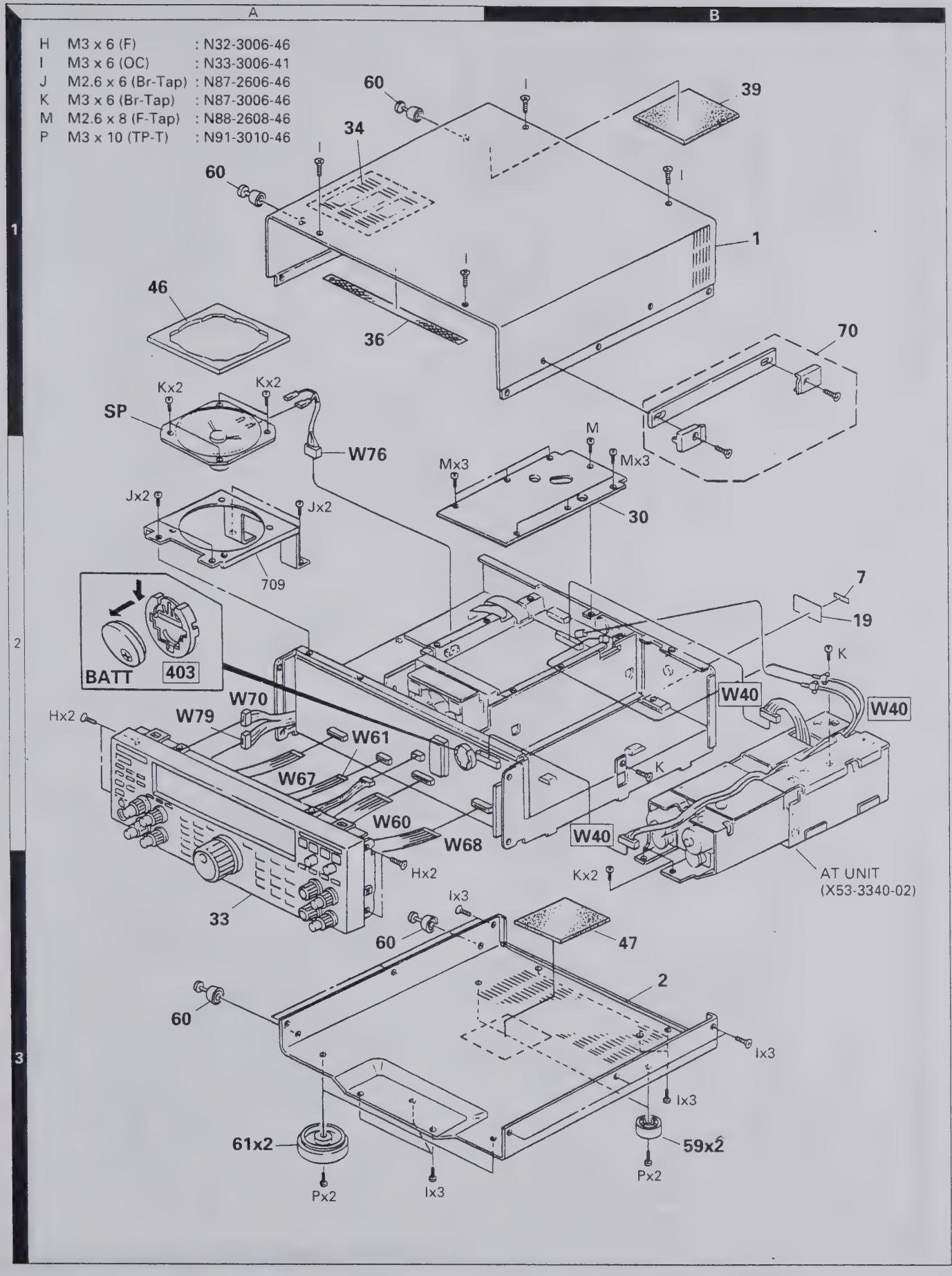

Parts with the exploded numbers larger than 700 are not supplied.

EXPLODED VIEW

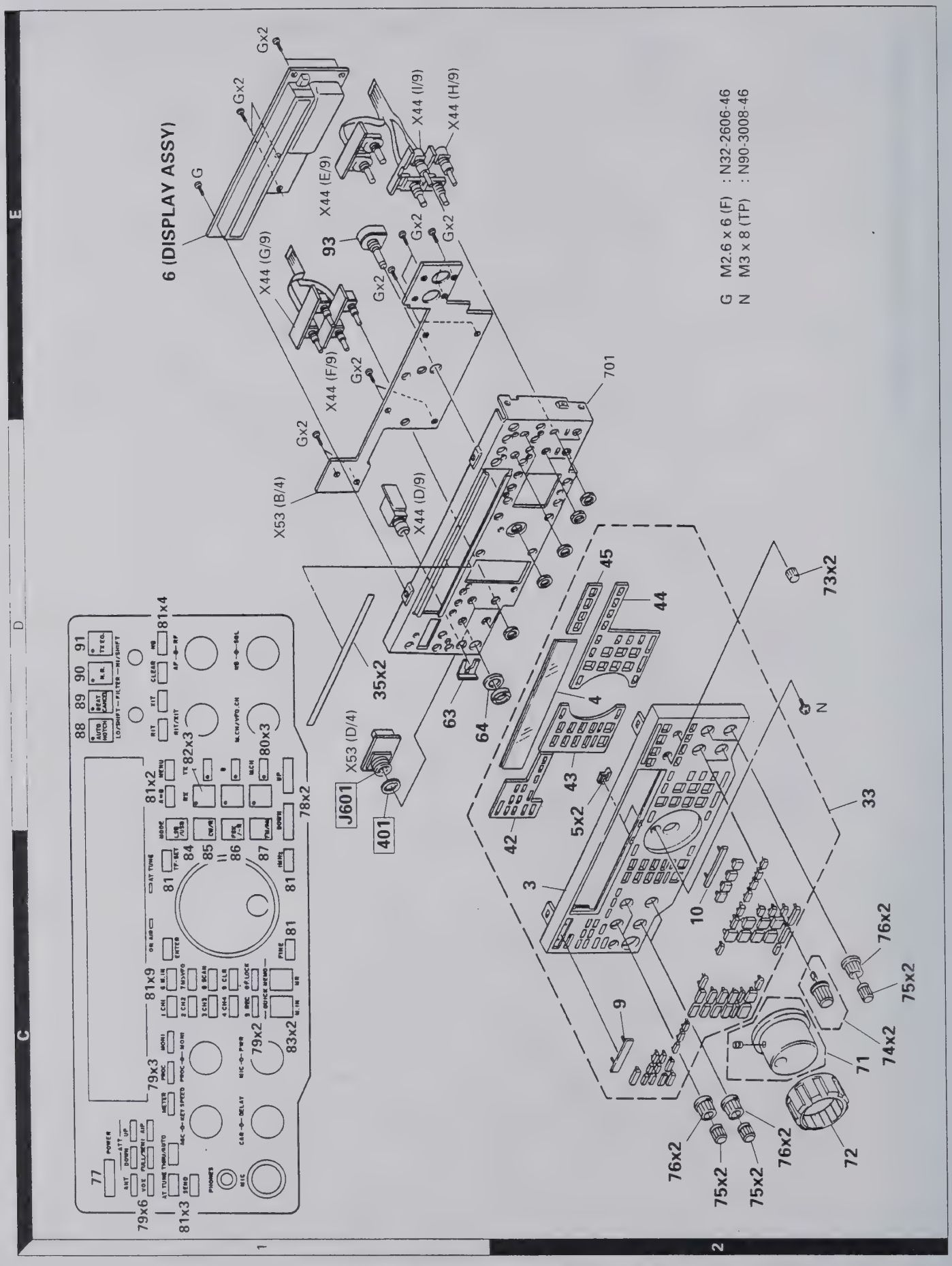

Parts with the exploded numbers larger than 700 are not supplied.

EXPLODED VIEW

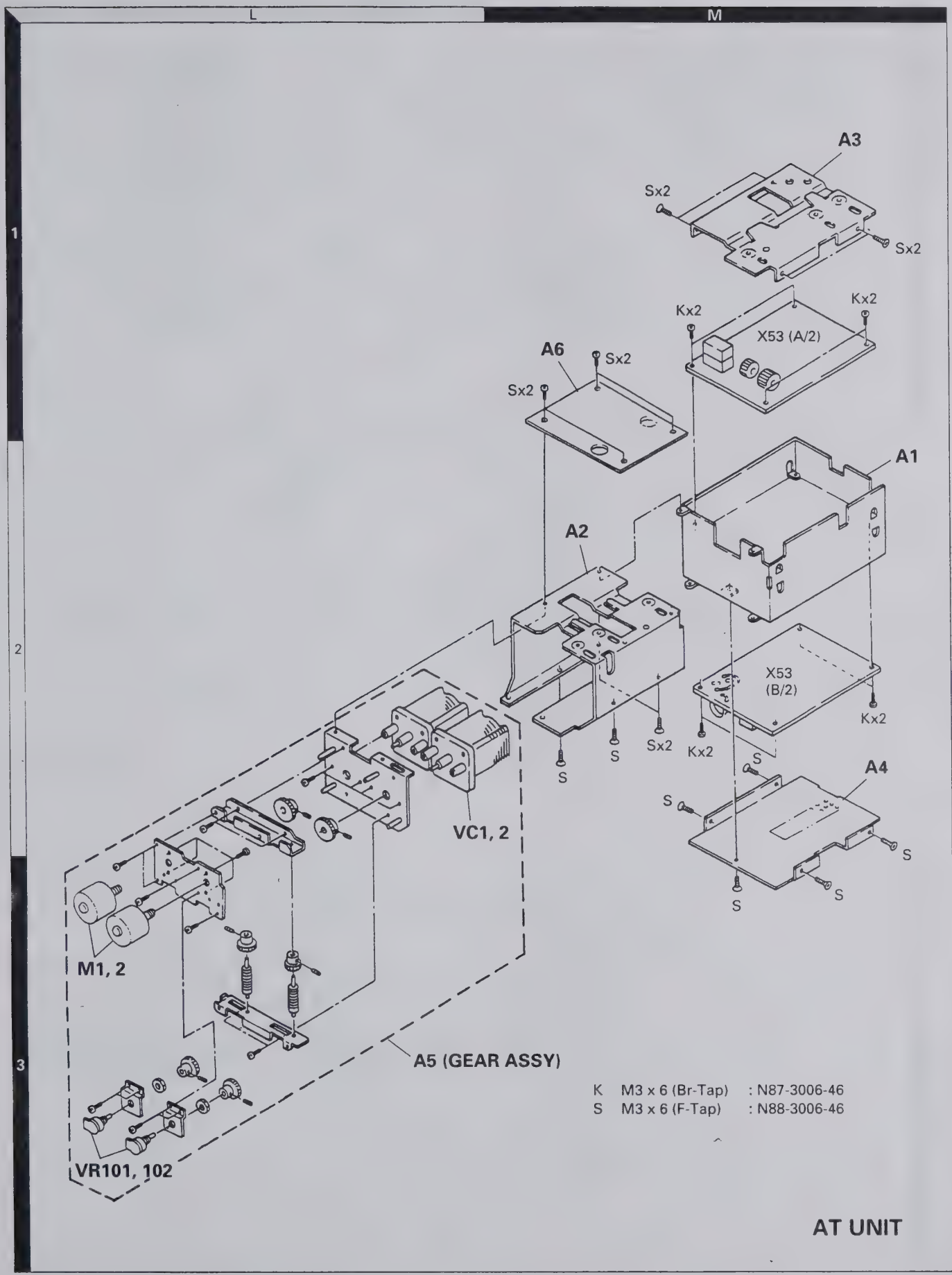

PACKING

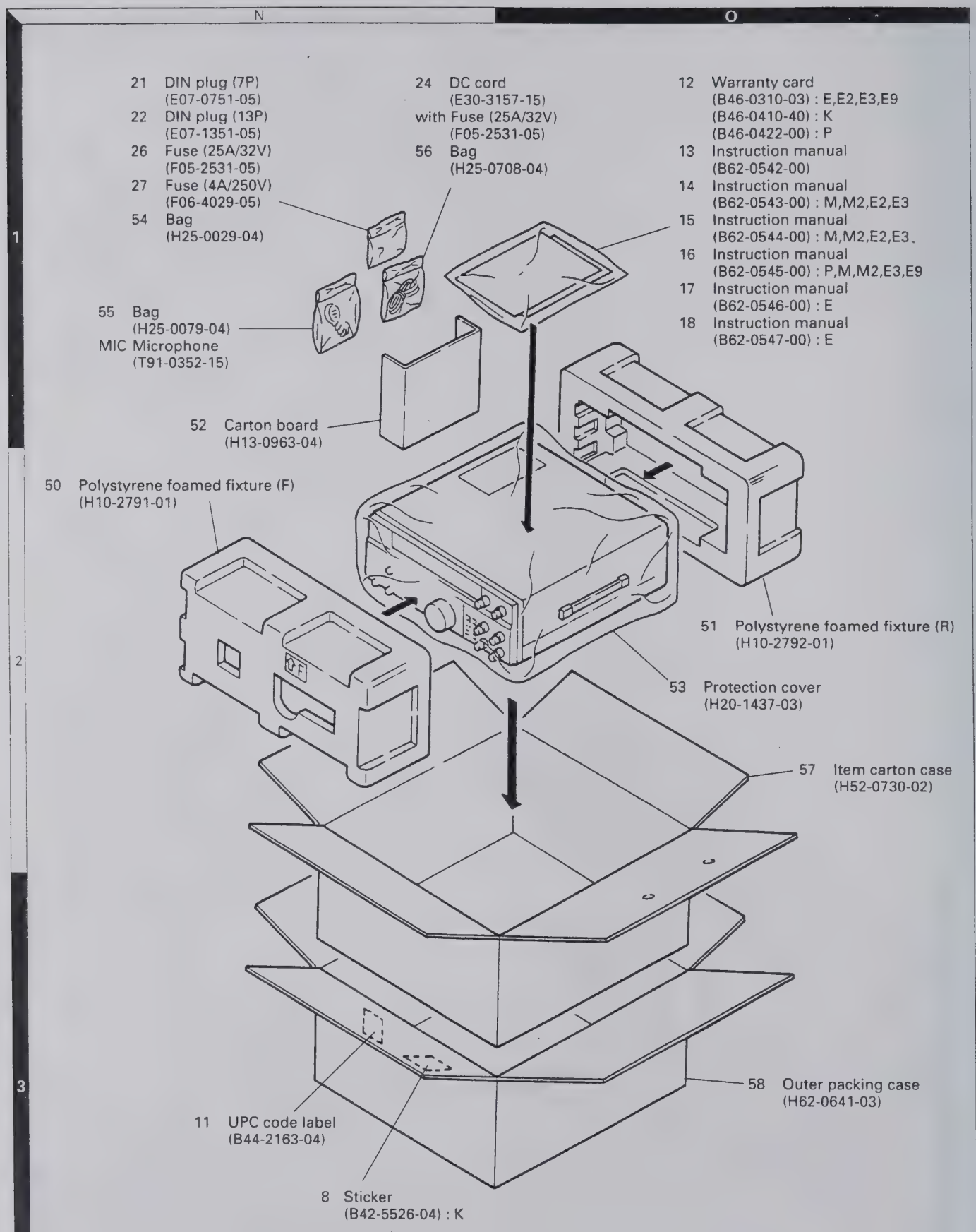
N
O
21 DIN plug (7P)
(E07-0751-05)
22 DIN plug (13P)
(E07-1351-05)
26 Fuse (25A/32V)
(F05-2531-05)
27 Fuse (4A/250V)
(F06-4029-05)
54 Bag
(H25-0029-04)
24 DC cord
(E30-3157-15)
with Fuse (25A/32V)
(F05-2531-05)
56 Bag
(H25-0708-04)
12 Warranty card
(B46-0310-03) : E,E2,E3,E9
(B46-0410-40) : K
(B46-0422-00) : P
13 Instruction manual
(B62-0542-00)
14 Instruction manual
(B62-0543-00) : M,M2,E2,E3
15 Instruction manual
(B62-0544-00) : M,M2,E2,E3
16 Instruction manual
(B62-0545-00) : P,M,M2,E3,E9
17 Instruction manual
(B62-0546-00) : E
18 Instruction manual
(B62-0547-00) : E
55 Bag
(H25-0079-04)
MIC Microphone
(T91-0352-15)
52 Carton board
(H13-0963-04)
50 Polystyrene foamed fixture (F)
(H10-2791-01)
51 Polystyrene foamed fixture (R)
(H10-2792-01)
53 Protection cover
(H20-1437-03)
57 Item carton case
(H52-0730-02)
58 Outer packing case
(H62-0641-03)
11 UPC code label
(B44-2163-04)
8 Sticker
(B42-5526-04) : K

ADJUSTMENT

Required Test Equipment

1. DC Voltmeter (DC V.M)
1) Input resistance : More than 1MΩ
2) Voltage range : 1.5 to 1000V AC/DC
Note : A high-recision multimeter may be used. However, accurate readings can not be obtained for high-impedance circuits.

2. DC Ammeter
1) Current range : 100mA, 1.5A, 15A, high-precision ammeter may be used.

3. RF VTVM (RF V.M)
1) Input impedance : 1MΩ and less than 3pF, min.
2) Voltage range : 10mV to 300V
3) Frequency range : 10kHz to 500MHz

4. AF Voltmeter (AF V.M)
1) Frequency range : 50Hz to 10kHz
2) Input resistance : 1MΩ or greater
3) Voltage range : 10mV to 30V

5. AF Generator (AG)
1) Frequency range : 200Hz to 5kHz
2) Output : 1mV or less to 1V, low distortion

6. AF Dummy Load (DM. SP)
1) Impedance : 8Ω
2) Dissipation : 3W or greater

7. Oscilloscope
Requires high sensitivity, and external synchronization capability (150MHz or greater).

8. Sweep Generator (Sweep G.)
1) Center frequency : 50kHz to 90MHz
2) Frequency deviation : Maximum ±35kHz
3) Output voltage : 100mV or greater

9. Standard Signal Generator (SSG)
1) Frequency range : 50kHz to 50MHz
2) Output : –133dBm/0.05μV to 7dBm/500mV
3) Output impedance : 50Ω
4) AM and FM modulation can be possible
Note : Generator must be frequency stable.

10. Frequency Counter (f. counter)
1) Minimum input voltage : 50mV
2) Frequency range : 150MHz or greater

11. Noise Generator (Noise G.)
Must generate ignition noise containing harmonics beyond 30MHz.

12. RF Dummy Load
1) Impedance : 150Ω and 50Ω
2) Dissipation : 150W or greater

13. Linear Detector
1) Frequency range : 30MHz

14. Power Meter
1) Impedance : 50Ω
2) Dissipation : 300W continuous or greater
3) Frequency limits : 60MHz or greater

15. Spectrum Analyzer
1) Frequency range : 100kHz to 110MHz or greater
2) Bandwidth : 1kHz to 3MHz

16. Detector
1) For adjustment of BPF

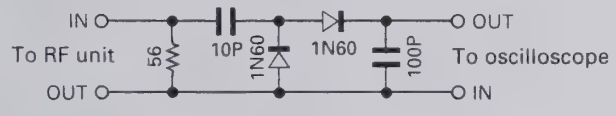

2) For adjustment of PLL/VCO BPF

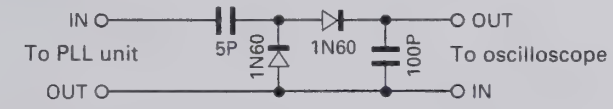

17. Directional Coupler

18. Monitor Receiver
R-1000 class

19. Microphone
MC-43S or MC-60S8

20. Tracking Generator

21. Distortion Meter

22. Double Signal Pad (50Ω)

ADJUSTMENT

Preparation

Unless otherwise specified, knobs and switches should be set as follows.

POWER	ON	PROCESSOR	Center
ATT	0	MIC	Center
AGC	Center	PWR	MAX
NB LEVEL	Center	CAR	Center
SQL	0		
AF	0		
RF	MAX		

Front Panel

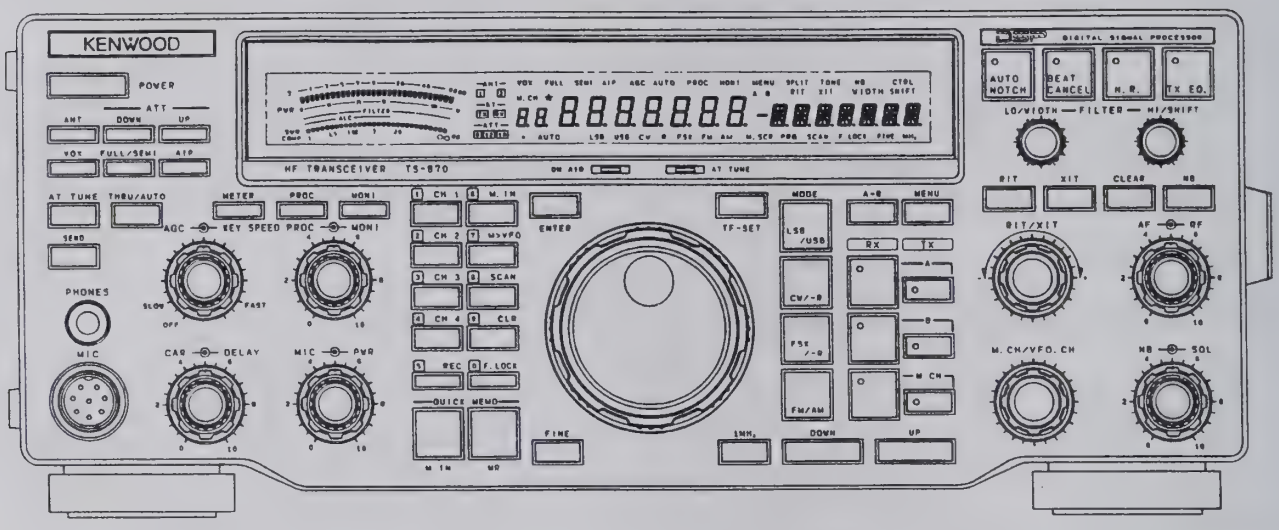

Rear Panel

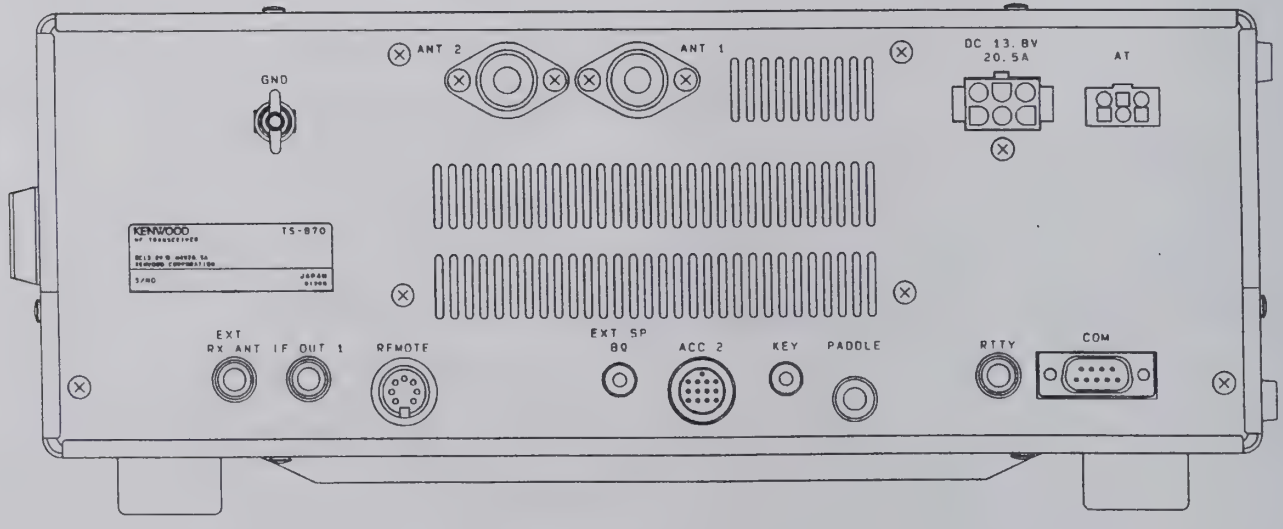

ADJUSTMENT

Service Jig

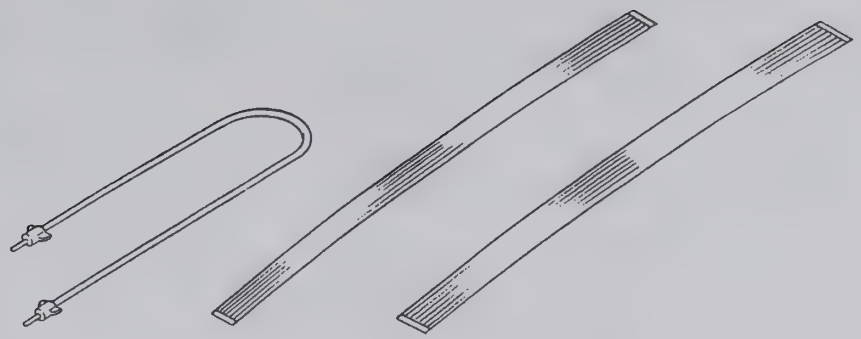

A. Lead wire with minipin plug
(E37-0064-05)
About 27cm

B . Flat cable (8P)
(E37-0581-05)
About 25cm

C. Flat cable (12P)
(E37-0580-05)
About 25cm

How to Use

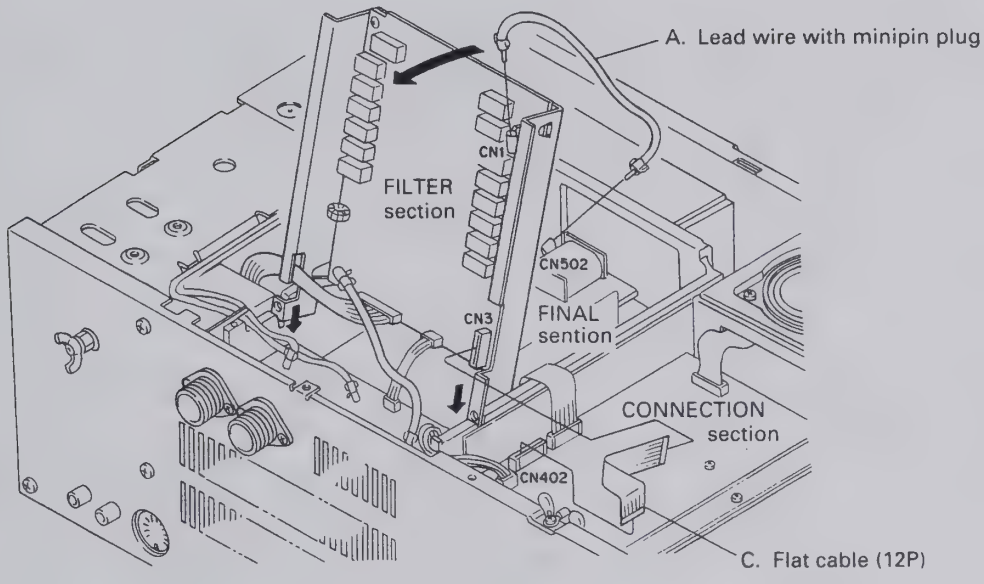

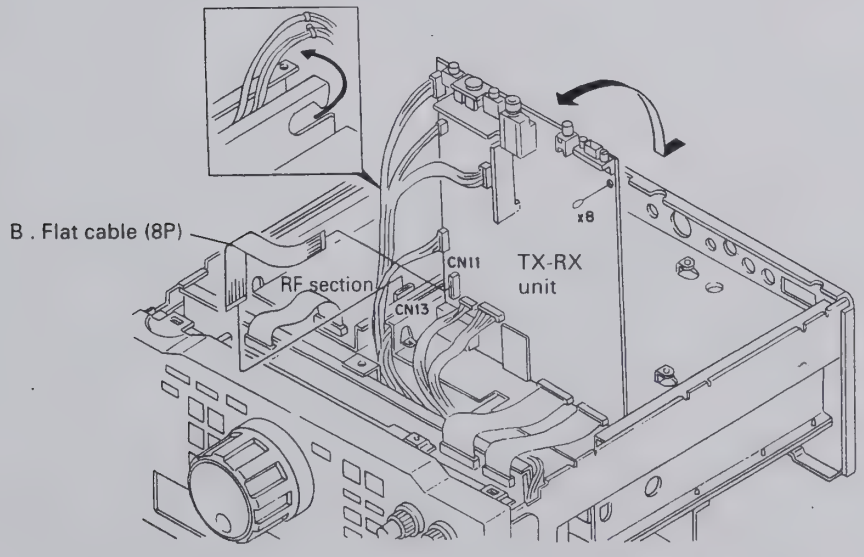

ADJUSTMENT

Service Adjustment Mode

■ Outline

- The TS-870S is adjusted by the normal method and by another method using the service adjustment mode.
- In the adjustment mode, there are 28 menu numbers A0 to BB. All adjustment data items are saved in the EEPROM.
- When the service adjustment mode is entered, data is read from the EEPROM and placed in the CPU RAM so that settings can be modified.
- The EEPROM is updated only when data is written in Menu No. BA.

Note : Transmission is possible in reception-related adjustment modes.

■ Operation procedure

1. Adjustment mode start
   Hold down the [N.R.] key and [LSB/USB] key, and turn the [POWER] switch ON to enter the adjustment mode. The menu number will appear in M. CH on the display.
2. Adjustment mode menu number selection
   When the [M. CH/VFO. CH] control is turned, the menu number changes.
3. Adjustment mode data writing
   Press the [UP]/[DOWN] key or the microphone [UP]/[DOWN] key in MENU No. BA.
4. Adjustment mode cancel
   When the [CLR] key is pressed, the normal memory-channel display returns.

Note : If the power is switched OFF in the adjustment mode, it is canceled.

Service Adjustment Mode Menu

Menu No.	Adjustment function	Description
A0	System	Checksum display (Program version confirmation)
A1	ALC	ALC reference voltage adjustment
A2	S-meter (SSB)	Start level setting
A3		S9 level setting
A4		Full-scale level setting
A5	Filter	8.83MHz IF filter center frequency correction
A6		455kHz IF filter center frequency correction
A7	Power adjustment	100W adjustment (With power meter curve)
A8		50W adjustment (With power meter curve)
A9		25W adjustment (With power meter curve)
AA		10W adjustment (With power meter curve)
AB	TX gain	1.9MHz band
AC		3.5MHz band
AD		7MHz band
AE		10MHz band
AF		14MHz band
B0		18MHz band
B1		21MHz band
B2		24.5MHz band
B3		29MHz band
B4	ALC meter	Stare level setting
B5		Maximum zone level setting
B6		Full-scale level setting
B7	SWR protection	Protection operation setting
B8	SWR meter	VSWR=3 level setting
B9	FM	FM deviation setting
BA	System	Writing into EEPROM
BB	Display	All LCD segments light (Not light ON AIR lamp)

ADJUSTMENT

Display Check

Item	Condition	Measurement			Adjustment			Specifications/Remarks
		Test-equipment	Unit	Terminal	Unit	Parts	Method	
1. All reset	1) DC IN : DC 13.8V Pushing [A=B] key down, [POWER] : ON.				Front panel	Display	After displaying HELLO, the display is reset as follows: DISP f. : 14.000.00 MODE : USB METER : ALC ANT : 1 AGC	Display should be normal Should be at the reset frequency.
2. All LCD segments light	1) Menu No. : BB						Check	All LCD segments light.

PLL Section

Item	Condition	Measurement			Adjustment			Specifications/Remarks
		Test-equipment	Unit	Terminal	Unit	Parts	Method	
1. 20MHz frequency adj.	1) [POWER] : ON MODE : FM Receive	f. counter	PLL	CN510 (TP)	PLL	TC800	Frequency adjust.	20.000MHz ± 20Hz
2. 20MHz peak adj.	1) Display f. : 14.000MHz MODE : USB Receive	RF V.M		CN503		L528	MAX.	
3. 60MHz BPF adj.	1) MODE : FM Receive			IC506 2 pin		L529 L530	Repeat for MAX.	
4. 55MHz BPF adj. and frequency check	1) Display f. : 14.000MHz MODE : FM Receive			IC508 11 pin		L518 L519 L520	Repeat for MAX.	
	2) Display f. : 14.000MHz	f. counter					Frequency check	55.299~55.301MHz
5. Lock voltage adj. & check VCO1	1) Display f. : 30kHz	DC V.M		TP501	PLL	TC506	1.8V	1.8 ± 0.03V
	2) Display f. : 7.489MHz						Voltage check	4.5~7.0V
6. Lock voltage adj. & check VCO2	1) Display f. : 7.500MHz				PLL	TC507	1.8V	1.8 ± 0.03V
	2) Display f. : 14.489MHz						Voltage check	4.5~7.0V
7. Lock voltage adj. & check VCO3	1) Display f. : 14.490MHz				PLL	TC508	1.8V	1.8 ± 0.03V
	2) Display f. : 21.489MHz						Voltage check	4.5~7.0V
8. Lock voltage adj. & check VCO4	1) Display f. : 21.490MHz				PLL	TC509	1.8V	1.8 ± 0.03V
	2) Display f. : 30.000MHz						Voltage check	4.5~7.0V
9. Lock voltage adj. LO2A (VCO2) X58-3390-03	1) Display f. : 30.000MHz			TP502	VCO2 X58-3390	TC1	5.0V	5.0 ± 0.03V

ADJUSTMENT

Item	Condition	Measurement			Adjustment			Specifications/Remarks
		Test-equipment	Unit	Terminal	Unit	Parts	Method	
10. Output level check LO1 (CN504)	1) Display f. : 14.000MHz MODE : USB Receive			CN504			Output level check	–5~+2dBm
LO2A (CN505)	Meaturement condition : 50Ω terminated			CN505				–1~+6dBm (64.220MHz)
LO3 (CN502)				CN502				–6~+0dBm (8.375MHz)
20MHz (CN503)				CN503				–10~+0dBm (20.0000MHz)
LO4 (CN501)		Oscilloscope		CN501				–10~+0dBm (10.0kHz)
11. 20MHz frequency (Final check)	1) MODE : USB Receive	f. counter		CN510 (TP)	PLL	TC800	Check	20.000MHz ± 20Hz

Receiver Section

Item	Condition	Measurement			Adjustment			Specifications/Remarks
		Test-equipment	Unit	Terminal	Unit	Parts	Method	
1. DSP PLL lock voltage adj.	1) Display f. : 14.000MHz MODE : USB	DC V.M	TX-RX	TP1	TX-RX	L4	3.50V	±0.1V
2. AGC voltage adj.	1) Display f. : 14.000MHz MODE : CW [RF] GAIN : MAX [AGC] : OFF			TP2		VR2	3.00V	±0.1V
3. MCF adj.	1) Display f. : 14.000MHz MODE : USB [AGC] : OFF Spectrum analyzer setting Center f. : 73.050MHz Frequency span : 50kHz ATT : –10dBm VBW, RBW : 1kHz V.REF : 2dB/DIV	Spectrum analyzer Tracking generator	RF	CN16 CN17	RF	L65 L67 L70 L72	Adjust so that gain is max. and band shown at right becomes flat.	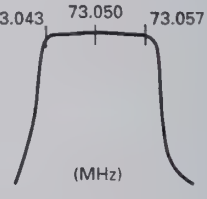
4. BPF adj.	1) Display f. : 7.000MHz MODE : USB [AGC] : OFF [AIP] : OFF Spectrum analyzer setting Center f. : 7.100MHz Frequency span : 2MHz	Spectrum analyser Tracking generator	Rear panel RF	ANT CN15	RF	L28 L29 L30 L31	Waveform is as shown in the figure at the right.	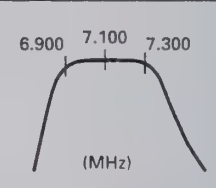
	2) Display f. : 14.000MHz Spectrum analyzer setting Center f. : 14.000MHz Frequency span : 5MHz					L38 L39 L40		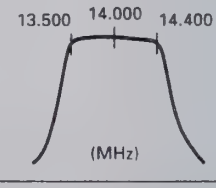
	3) Display f. : 21.000MHz Spectrum analyzer setting Center f. : 21.200MHz Frequency span : 10MHz					L44 L45 L46		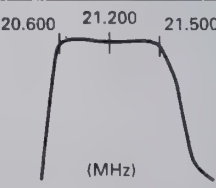

ADJUSTMENT

Item	Condition	Measurement			Adjustment			Specifications/Remarks
		Test-equipment	Unit	Terminal	Unit	Parts	Method	
(28MHz BPF adj.)	1) Display f. : 29.800MHz MODE : USB [AGC] : FAST SSG frequency : 22.101MHz SSG output : –113dBm	SSG AF V.M Oscilloscope DM. SP	Rear panel	ANT EXT. SP	RF	L50 L52	Adjust so that the gain is MAX.	MAX.
5. RX IF AMP adj.	1) Display f. : 14.100MHz MODE : USB [AGC] : OFF [AIP] : OFF AF output : 0.63V/8Ω SSG frequency : 14.101MHz SSG output : –119dBm	SSG AF V.M Oscilloscope DM. SP	Rear panel	ANT EXT. SP	RF Connec-tion	L75 L77 L451 L452 L458	Repeat 2~3 times for MAX AF output reading.	
• Item 6 to 10 below are adjusted in the adjustment mode. To terminate the adjustment menu in the middle, save your settings with Menu No. BA.								
6. Checksum check	1) Menu No. : A0				Front panel	Display	Check	Display : E7b9
7. ALC voltage adj.	1) Menu No. : A1	DC V.M	RF	TP2	Front panel	[RIT/XIT] knob	2.70V	±0.02V
8. S-meter adj.	1) Menu No. : A2 SSG frequency : 14.101MHz SSG output : –110dBm	SSG AF V.M Oscilloscope DM. SP	Rear panel	ANT EXT. SP	TX-RX	VR1	Display : 05	±02
S1	2) Menu No. : A2 SSG output : –107dBm				Front panel	[UP] key	[UP] key : Push once time	Reference display : 12±06
S9	3) Menu No. : A3 SSG output : –81dBm							Reference display : 45±10
Full-scale	4) Menu No. : A4 SSG output : –23dBm							Reference display : 80±20
9. 8.83MHz IF filter adj.	1) Menu No. : A5 SSG1 f. : 1.79980MHz SSG1 output : –60dBm SSG2 f. : 1.80260MHz SSG2 output : –60dBm	SSG1 SSG2 Double signal pad Oscilloscope (10:1 probe)	Rear panel Connec-tion	ANT TP401	Front panel	[RIT/XIT] knob	The waveforms must cross.	OK 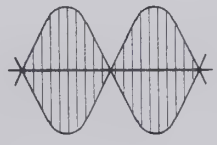
10. 455kHz IF filter adj.	1) Menu No. : A6			TP402				NG 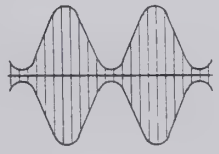
• Writing data : After items 6 to 10 have been adjusted: 1) Menu No. : BA 2) [UP] key : Push once time Display "rEAdy" → "good" (If "nG" is displayed, enter data again.) 3) [CLR] key : Push once time (Adjustment mode terminated)								

ADJUSTMENT

Item	Condition	Measurement			Adjustment			Specifications/Remarks
		Test-equipment	Unit	Terminal	Unit	Parts	Method	
11. ATT check	1) Display f. : 14.100MHz SSG frequency : 14.101MHz SSG output : –107dBm [AGC] : OFF [AIP] : OFF AF output : 1V/8Ω	SSG AF V.M Oscilloscope DM. SP	Rear panel	ANT EXT. SP	Front panel	ATT SW (UP/ DOWN)	AF output should be lowered 6dB at time.	AF output ± 3dB
	a. ATT : 0dB						1.0V	ATT display : None
	b. ATT [UP] key : 6dB						0.5V	ATT display : 6
	c. ATT [UP] key : 12dB						0.25V	ATT display : 12
	d. ATT [UP] key : 18dB						0.125V	ATT display : 18
	e. ATT [DOWN] key : 12dB						0.25V	ATT display : 12
	f. ATT [DOWN] key : 6dB						0.5V	ATT display : 6
	g. ATT [DOWN] key : 0dB						1.0V	ATT display : None
12. S/N check	1) Display f. : Indicated below AF VR : 0.63V/8Ω SSG f. : Indicated below However, USB : +1kHz LSB : –1kHz	SSG AF V.M Oscilloscope Distortion meter DM. SP	Rear panel	ANT EXT. SP				Note : If the frequency is 7.5MHz or less, AIP turns ON automatically. Turn AIP OFF with the AIP switch before starting measurement.
	Frequency / MODE / SSG output / SSG MOD / DEV							
	100kHz AM –87dBm 1kHz 60%						S/N measurement	10dB or more.
	1 500MHz AM –77dBm 1kHz 60%							
	1.8MHz LSB –119dBm OFF OFF						MAX sensitivity measurement	0.7V/8Ω or more.
	3.5MHz LSB –119dBm OFF OFF							
	5.5MHz LSB –119dBm OFF OFF							
	7.1MHz LSB –119dBm OFF OFF							
	10.1MHz USB –119dBm OFF OFF							
	12.5MHz USB –119dBm OFF OFF							
	14.1MHz USB –119dBm OFF OFF ←						[AIP] : ON	Sensitivity down 5~15dB.
	18.1MHz USB –119dBm OFF OFF							
	21.1MHz USB –119dBm OFF OFF							
	24.8MHz USB –123dBm OFF OFF							
	29.8MHz USB –123dBm OFF OFF							
	29.8MHz FM –119dBm 1kHz 3kHz ←						SINAD sentitivity measurement	12dB SINAD or more.
13. SSB squelch check	1) Display f. : 14.100MHz MODE : USB [AGC] : OFF SSG frequency : 14.101MHz SSG output : OFF	SSG AF V.M Oscilloscope DM. SP	Rear panel	ANT EXT. SP	Front panel	[SQL] VR	Set to the point noise disappeared.	Knob position 10 : 00~14 : 00
	2) SSG output : –101dBm						Check	Squelch should open.
	3) [SQL] VR : Fully clockwise							Squelch should close.
	4) SSG output : –83dBm							Squelch should open.
14. FM squelch check	1) Display f. : 29.8MHz MODE : FM SSG output : OFF				Front panel	[SQL] VR	Set o the point noise disappeared.	Knob position 8 : 00~12 : 00
	2) SSG output : –119dBm SSG MOD : 1kHz SSG DEV : 3kHz						Check	Squelch should open.
	3) [SQL] VR : Fully clockwise							Squelch should close.
	4) SSG output : –100dBm							Squelch should open.

ADJUSTMENT

Item	Condition	Measurement			Adjustment			Specifications/Remarks
		Test-equipment	Unit	Terminal	Unit	Parts	Method	
15. NB adj.	1) Display f. : 14.100MHz MODE : USB SSG frequency : 14.101MHz SSG output : –90dBm	SSG AF V.M Oscilloscope DM. SP DC V.M	Rear panel RF	ANT EXT. SP TP1	RF	L81 L82	Voltage minimum	
	2) [NB] key : ON [NB] VR : Center	Noise G.	Rear panel	ANT			Adjust output of noise generator to small input (S1) and large input (S9) and check each.	Noise should disappear.
16. S-meter check	1) Display f. : 14.175MHz MODE : USB [AGC] : FAST [RF] GAIN : MAX SSG frequency : 14.176MHz SSG output : –107dBm	SSG AF V.M Oscilloscope DM. SP	Rear panel	ANT EXT. SP	Front panel	Display	S-meter level : S1	–111~–101dBm
	2) SSG output : –83dBm						S-meter level : S9	–89~–77dBm
	3) [NB] key : ON						S-meter level check	Same as when [NB] key off.
17. Auto notch check	1) Display f. : 14.175MHz MODE : USB SSG frequency : 14.1765MHz SSG output : –73dBm [AUTO NOTCH] key : Push (ON)	SSG	Rear panel	ANT	Front panel	Display	S-meter level check	S-meter off.
18. Voice check (equipped on VS-2)	1) [AF] VR : Arbitrary [MENU] key : Push (ON) [M.CH/VFO.CH] knob : Menu No. 48 [UP] key : Step 73 [MENU] key : Push (OFF) [FINE] key : Push (ON)						Check	The displayed frequency can be heard vocally.

Transmitter Section

Item	Condition	Measurement			Adjustment			Specifications/Remarks
		Test-equipment	Unit	Terminal	Unit	Parts	Method	
1. TX MCF adj.	1) Display f. : 14.200MHz MODE : USB Transmit Spectrum analyzer setting TG output : –10dBm Center f. : 8.83MHz Span : 10kHz V.REF : 2dB/DIV	Tracking generator Spectrum analyzer	RF	CN10 TP3	RF	L100	MAX.	
2. TX IF AMP adj.	1) Display f. : 14.200MHz MODE : CW [CAR] VR : Center Disconnect CN4 from the RF unit and connect a 50Ω dummy load. Transmit	50Ω dummy Oscilloscope	RF	CN4	RF Connection	L99,98 L95,94 L92,91 L89 VR3 L457 L456 L455	Repeat 2 or 3 times for MAX.	Reference value 2.5Vp-p or more
	2) After adjustment, set [CAR] VR to MAX for confirmation.							

ADJUSTMENT

Item	Condition	Measurement			Adjustment			Specifications/Remarks
		Test-equipment	Unit	Terminal	Unit	Parts	Method	
3. Final base current	1) Display f. : 14.200MHz MODE : USB [MIC] VR : MIN [CAR] VR : MIN Final unit VR501,502 : MIN Connect ammeter + : External power supply – : Power connector Adjust to minimum current with VR501 and VR502 in the final unit. Transmit	Ammeter			Final	VR501	Current drain (Minimum current) +250mA	First adjust VR501 and VR502 for minimum. Adjust VR501 for an increase of 250mA when switched to TX. Then adjust VR502 for 250mA over this reading.
						VR502	Current drain (Minimum current) + driver current (250mA) + 250mA.	
• Item 4 to 13 below are adjusted in the adjustment mode. To terminate the adjustment menu in the middle, save your settings with Menu No. BA.								
4. ALC adj.	1) Menu No. : A7 Transmit	Power meter	Rear panel	ANT	Front panel	[RIT/XIT] knob	100W	±5.0W
5. NULL adj.	1) Menu No. : A7 Transmit	Power meter DC V.M	Rear panel Filter	ANT CN5	Filter	TC1	MIN.	Reference value 0.5V or less
6. ALC frequency response adj.	1) TX [M.CH] key : Push Display f. : 29.700MHz MODE : CW Transmit	Power meter	Front panel	ANT	Filter	VR1	95W	±5.0W
	2) TX [M.CH] key : Push Menu No. : A7 Transmit						100W power check	100W ± 5W When unable to be set within the range, ALC and frequency response to be adjusted.
7. TX power adj. The power meter on the display is also calibrat--ed at the same time.	1) 50W Menu No. : A8 Transmit After adjustment, [UP] key : Push	Power meter	Rear panel	ANT	Front panel	[RIT/XIT] knob	50W	±3.0W
	2) 25W Menu No. : A9 Transmit After adjustment, [UP] key : Push						25W	±2.0W
	3) 10W Menu No. : AA Transmit After adjustment, [UP] key : Push						11W	±2.0W
8. TX gain adj.	1) 1.9MHz band Menu No. : AB Transmit	Power meter	Rear panel	ANT	Front panel	[UP] key	Press the [UP] key after the beep sounds for two or three seconds.	
	2) 3.5MHz band Menu No. : AC Transmit							
	3) 7.0MHz band Menu No. : AD Transmit							
	4) 10.1MHz band Menu No. : AE Transmit							
	5) 14.1MHz band Menu No. : AF Transmit							

ADJUSTMENT

Item	Condition	Measurement			Adjustment			Specifications/Remarks
		Test-equipment	Unit	Terminal	Unit	Parts	Method	
	6) 18.0MHz band Menu No. : B0 Transmit	Power meter	Rear panel	ANT	Front panel	[UP] key	Press the [UP] key after the beep sounds for two or three seconds.	
	7) 21.0MHz band Menu No. : B1 Transmit							
	8) 24.9MHz band Menu No. : B2 Transmit							
	9) 29.7MHz band Menu No. : B3 Transmit							
9. ALC meter adj.	1) 1 dot Menu No. : B4 Transmit	Power meter	Rear panel	ANT	Front panel	[UP] key	[UP] key : Push	
	2) Zone MAX Menu No. : B5 Transmit							
	3) Full Menu No. : B6 Transmit							
10. SWR protection adj.	1) Nenu No. : B7 Transmit After adjustment, [UP] key : Push	Through type power meter 150Ωdummy	Rear panel	ANT	Front panel	[RIT/XIT] knob	40W	±3.0W
11. SWR meter adj.	1) Menu No. : B8 Transmit					[UP] key	[UP] key : Push	
12. FM DEV adj.	1) Menu No. : B9 AG output : 1kHz/30mV Transmit	Power meter Linear detector AG	Rear panel	ANT	Front panel	[RIT/XIT] knob	4.6kHz	±0.1kHz
13. FM MIC sense check	1) Menu No. : B9 AG output : 1kHz/3mV **E,X** AG output : 1kHz/5mV **K,P,M**		Front panel	MIC			Check	3.0kHz ± 0.5kHz
• Writing data : After items 4 to 13 have been adjusted: 1) Menu No. : BA 2) [UP] key : Push once time Display "rEAdy" → "good" (If "nG" is displayed, enter data again.) 3) [CLR] key : Push once time (Adjustment mode terminated)								
14. Spurious adj.	1) Display f. : 24.900MHz MODE : CW Transmit	Power meter Spectrum analyzer	Rear panel	ANT	RF	VR2	±1.65MHz spurious level MIN.	–60dB or less
15. Monitor level check	1) Display f. : 21.100MHz MODE : USB [MONI] key : ON [MONI] VR : Center [MIC] VR : Center [AF] VR : MIN AG output : 1kHz/10mV Transmit	Power meter AF V.M Oscilloscope DM. SP AG AF V.M	Rear panel Front panel	ANT EXT. SP MIC	Front panel	Display	Check	0.2V ± 0.05V

ADJUSTMENT

Item	Condition	Measurement			Adjustment			Specifications/Remarks
		Test-equipment	Unit	Terminal	Unit	Parts	Method	
16 Processor check	1) Display f. : 14.200MHz MODE : USB [MIC] VR : Center [PROC] key : ON [METER] : COMP AG output : 1kHz/10mV	Power meter AG AF V.M	Rear panel Front panel	ANT MIC	Front panel	Display	Check	COMP meter : 15~25dB
	2) AG output : 1kHz/1mV							COMP meter : 1dot light
17. Sidetone check	1) Display f. : 14.200MHz MODE : CW [MONI] VR : Center Key down	AF V.M Oscilloscope DM. SP Electronic keyer jig	Rear panel	EXT. SP KEY			Check	0.63V ± 0.3V
18. CW break-in check	1) Display f. : 14.200MHz MODE : CW [VOX] key : ON [FULL/SEMI] key : FULL	Power meter Oscilloscope Electronic keyer jig	Rear panel	ANT KEY			Electronic keyer jig : Key down	Full break-in operation (When the key is turned OFF, the receive mode returns immediately.)
	2) [FULL/SEMI] key : SEMI [DELAY] knob : Center							Semi break-in operation (When the key is turned OFF, the receive mode returns after a while.)
19. DRU check (equipped on DRU-3)	1) Connect a microphone to the MIC jack. MODE : USB/LSB [MIC] VR : Center [REC] key : Push						Hold down the [CH1], and talk into the microphone.	Can be recorded for about 15 seconds.
							Release and press the [CH1] key again.	The recorded voice must be played back.
20 Sub tone check	1) Display f. : 29.100MHz MODE : FM MIC jack : 600Ω terminated [A=B], [TX-B] key : Push [M.IN] key : Push two times [RX-M.CH] : Push Transmit	Power meter Linear detector Oscilloscope f. counter Microphone	Rear panel Front panel	ANT MIC			Check	DEV : ±0.5~1.0kHz Tone f. : 88.2~88.7Hz
21 TX frequency check	1) Display f. : 29.100MHz MODE : CW Transmit							29.100.000MHz ± 145Hz
22. TX frequency characteristic check	1) Display f. : 14.200MHz MODE : USB/LSB MIC jack : Connect to AG AG output : 1kHz/5mV 400Hz/5mV 2.6kHz/5mV Transmit	Power meter Oscilloscope AG AF V.M	Rear panel Front panel	ANT MIC			a. Set AG to 1.0kHz and turn the [MIC] VR to set to 100W. b. Change the AG frequency and measure the difference between the power levels at 1.0kHz and at another frequency. c. Take a measurement for each USB and LSB.	Within 6dB

ADJUSTMENT

Item	Condition	Measurement			Adjustment			Specifications/Remarks
		Test-equipment	Unit	Terminal	Unit	Parts	Method	
23. Processor check	1) Display f. : 14.200MHz MODE : USB [PROC] key : ON [METER] key : Push [PROC] VR : MIN MIC jack : Connect to AG AG output : 1.0kHz/1mV Transmit						Change [PROC] VR so that the first segment on the COMP meter lights.	
	2) AG output : 1.0kHz /10mV (20dB UP) Transmit						Check	COMP meter : within 15~25dB
24. AT	1) Display f. : Indicated below MODE : CW [METER] : SWR [THRU/AUTO] : AUTO Transmit After checked retuen to receive mode.	Through type power meter 150Ωdummy	Rear panel	ANT	Front panel	Display	Check	ON AIR LED light. AT TUNE LED light. When tuning completed, LEDs off.
	2) [AT TUNE] key : ON	Frequency 1.910MHz 3.500 3.700 7.000 10.100 14.000 18.100 21.000 24.900 29.700			AT	TC1	Note : When 29.700MHz and SWR 1.0 to 1.3, variiable capacitor has flutters so that it does not stop, adjust the TC1 at which SWR 1.2 or less is acceptable.	Begins AT tuning after entering the transmission state. This should stop within roughly 6 seconds. SWR : 1.2 or less Power : 70W or more

Adjustment Points

■ **Side view**

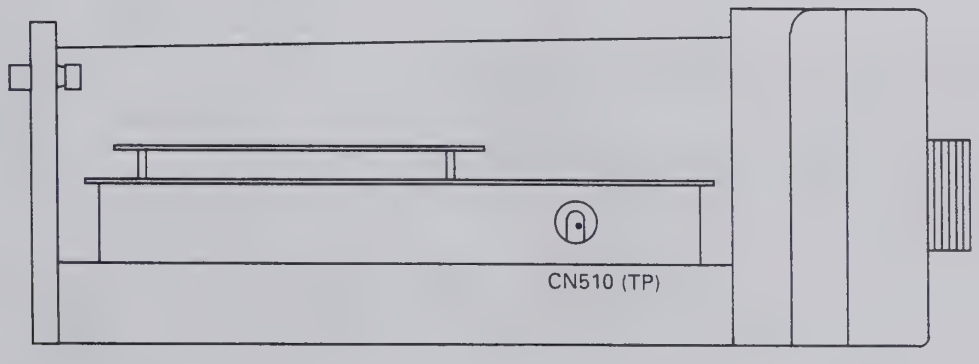

ADJUSTMENT

■ Upper view

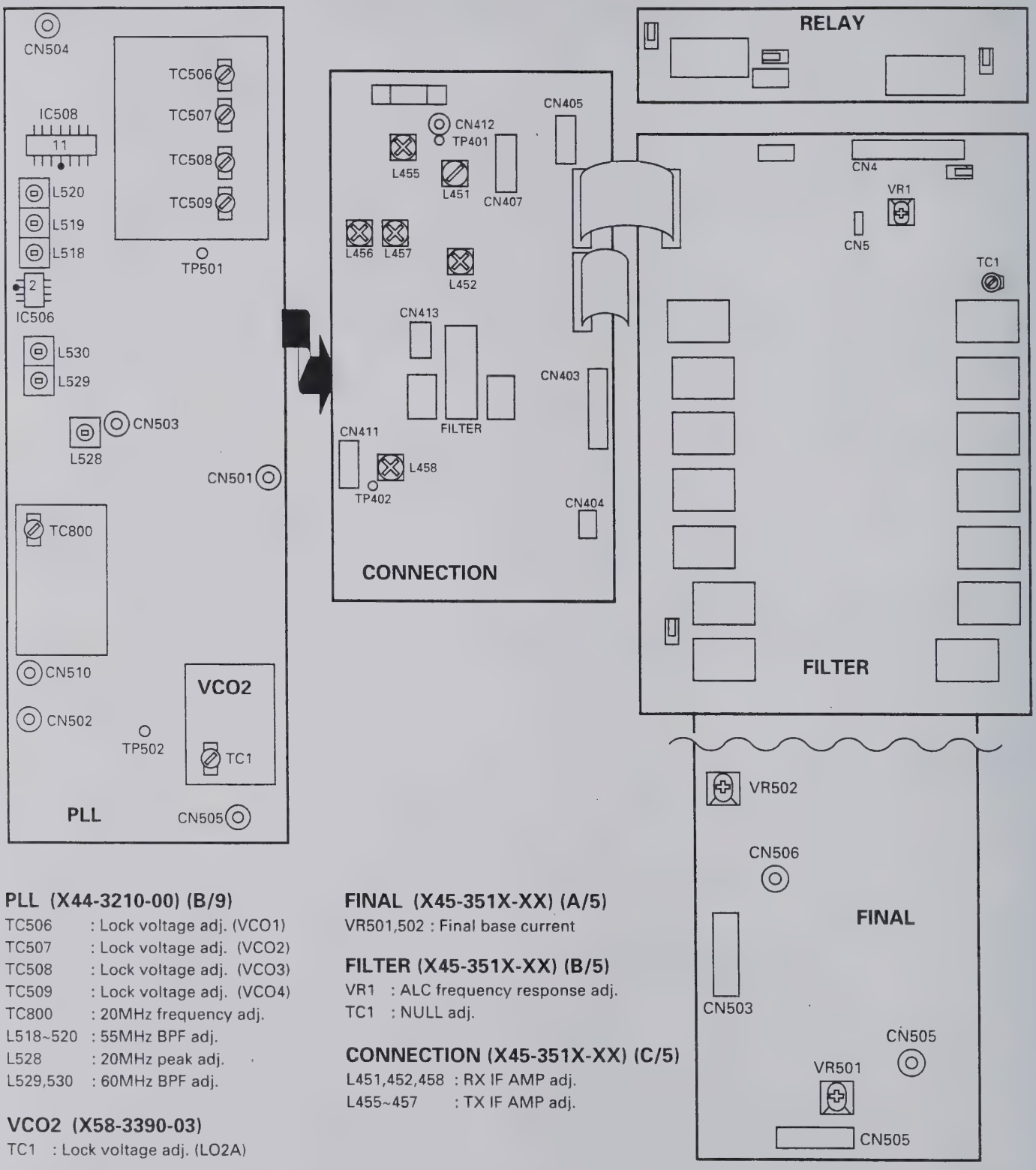

PLL (X44-3210-00) (B/9)

TC506 : Lock voltage adj. (VCO1)
TC507 : Lock voltage adj. (VCO2)
TC508 : Lock voltage adj. (VCO3)
TC509 : Lock voltage adj. (VCO4)
TC800 : 20MHz frequency adj.
L518~520 : 55MHz BPF adj.
L528 : 20MHz peak adj.
L529,530 : 60MHz BPF adj.

VCO2 (X58-3390-03)

TC1 : Lock voltage adj. (LO2A)

FINAL (X45-351X-XX) (A/5)

VR501,502 : Final base current

FILTER (X45-351X-XX) (B/5)

VR1 : ALC frequency response adj.
TC1 : NULL adj.

CONNECTION (X45-351X-XX) (C/5)

L451,452,458 : RX IF AMP adj.
L455~457 : TX IF AMP adj.

ADJUSTMENT

■ **Lower view**

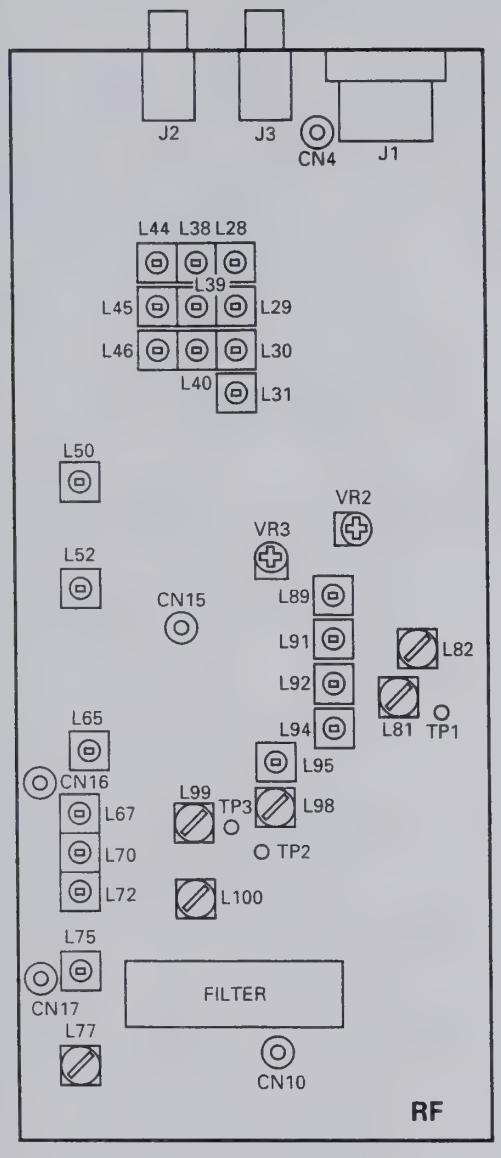

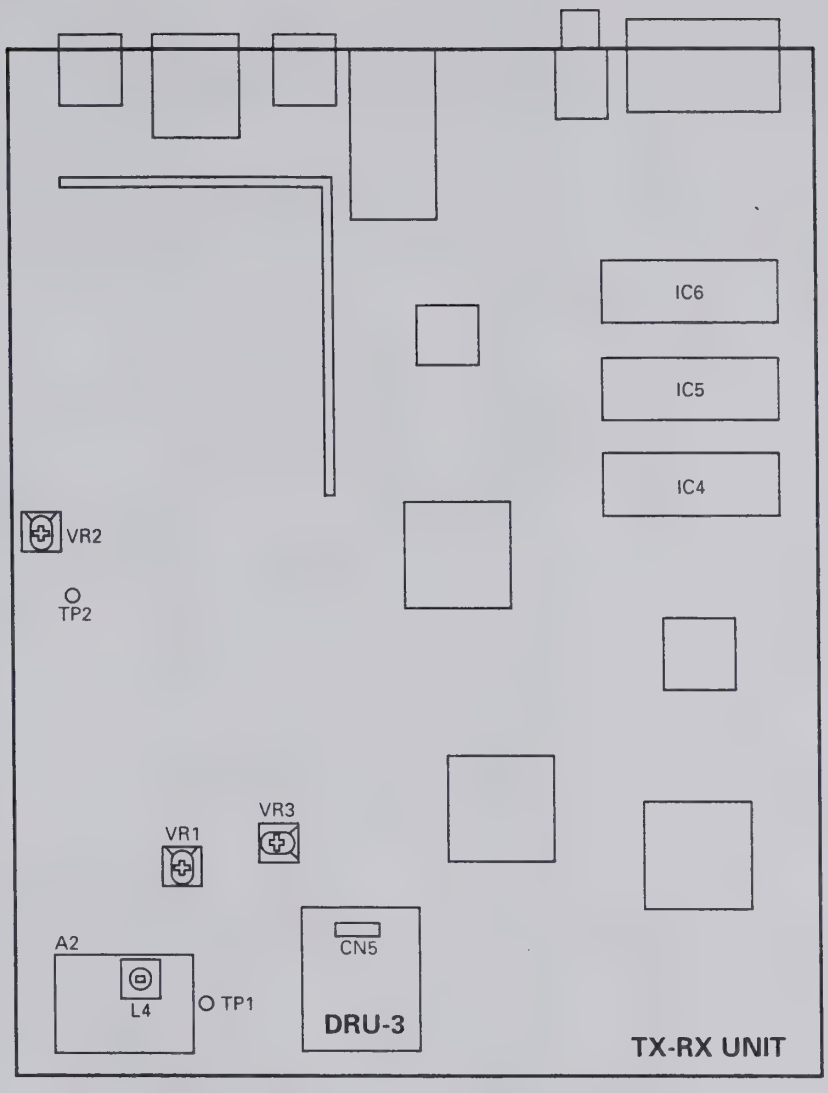

RF (X44-3210-00) (A/9)

VR2	: Spurious adj.
VR3,L89,91,92,94,95,98,99	: TX IF AMP adj.
L28~31,38~40,44~46,50,52	: BPF adj.
L65,67,70,72	: MCF adj.
L75,77	: RX IF AMP adj.
L81,82	: NB adj.
L100	: TX MCF adj.

TX-RX UNIT (X57-4620-00)

VR1	: S-meter adj.
VR2	: AGC voltage adj.
VR3	: DRU-3 recording level adj. (Adjusted to the mechanical center)
L4	: DSP PLL lock voltage adj.

TERMINAL FUNCTION

CN No.	Pin No.	Name	Function
RF UNIT (X44-3210-00) (A/9) : RF			
CN2	Coaxial	RAT	RX signal
CN4	Coaxial	DRV	TX drive signal
CN5	Coaxial	LO1	1st local oscillation 73.08~103.05MHz
CN6	Coaxial	LO2A	2nd local oscillation 64.22MHz
CN7	1	TXB	TX 8V
	2	RXB	RX 8V
	3	AGC	AGC voltage
CN10	Coaxial	TR88	RX IF output/TX IF input 8.83MHz
CN13	1	SPO	Speaker signal
	2	CKY	Keying signal
	3	AGC	AGC voltage
	4	TXC	TX : "H"
	5	RXC	RX : "H"
	6	8A	Analog 8V
	7	14S	14V-switched
	8	GND	GND
CN14	1	15K	Filter selection 15kHz
	2	3K	Filter selection 3kHz
	3	6K	Filter selection 6kHz
	4	VSF	Forward wave detection voltage
	5	VSF	Reflected wave detection voltage
	6	ALM	ALC meter output
	7	THP	Thermal protection
	8	NC	
	9	UCK2	RF serial/parallel convert clock
	10	UDA2	RF serial/parallel convert data
	11	ENR1	RF serial/parallel convertor IC1 enable
	12	ENR2	RF serial/parallel convertor IC2 enable
	13	ENR3	DAC enable
	14	NC	
	15	RBK	RF blank signal
	16	–6	–6V
	17	GND	GND
	18	NC	
	19	SS	TX/RX control signal TX : "L"
	20	NC	
J1	1	SPO	Speaker signal
	2	COM	Relay common terminal
	3	SS	TX/RX control signal
	4	MKE	TX relay close
	5	BRK	TX relay open
	6	ALC	ALC input
	7	RL	13V output when TX
J2		EXT RX	External receiver output
J3		IF OUT	SM-230
RF UNIT (X44-3210-00) (B/9) : PLL			
CN500	1	GND	GND
	2	NFMT	FM modulation on/off signal (FM TX : "L")
	3	VB3	21.489~30MHz } VCO select signal Active "H"
	4	VB2	14.489~21.489MHz
	5	VB1	7.489~14.489MHz
	6	VB0	0~7.489MHz
	7	UNL	Unlock detection output (Unlock : "H")
	8	GND	GND
	9	PLE2	PLL2 enable signal (LO2A)
	10	PLE1	PLL1 enable signal (LO1)
	11	PCK	Clock
	12	PDA	PLL, DDS data
	13	14D	14V
	14	DLE3	DDS3 enable signal (LO4)
	15	DLE2	DDS2 enable signal (LO3)
	16	DLE1	DDS1 enable signal (LO1)
	17	TXC	PLL DDS latch select signal (TX : "H")
	18	GND	GND
	19	9P	9V
	20	5P	5V
CN501	1	GND	GND
	2	LO4	DDS3 output
CN502	Coaxial	LO3	DDS2 output (8.375MHz)
CN503	Coaxial	REF	Reference signal output for TX-RX unit (20MHz)
CN504	Coaxial	LO1	LO1 output (73.08~103.05MHz)
CN505	Coaxial	LO2A	LO2A output (64.22MHz)
CN506	1	FMD	FM modulation signal
	2	GND	GND
	3	GND	GND
RF UNIT (X44-3210-00) (D/9) : PHONE			
CN901	1	SPI1	Phone jack through
	2	SPG	GND
	3	SPO1	Phone jack output
RF UNIT (X44-3210-00) (E, F, G, H, I/9) : VR			
CN903	1	DGND	Digital GND
	2	VPWR	MIC/PWR VR 1
	3	VMIC	MIC/PWR VR 2
	4	VDLY	CAR/DELAY VR 1
	5	VCAR	CAR/DELAY VR 2
	6	5D	5V
CN904	1	DGND	Digital GND
	2	VMON	PROC/MONI VR 1
	3	VPRC	PROC/MONI VR 2
	4	VKEY	AGC/KEY VR 1
	5	VAGC	AGC/KEY VR 2
	6	5D	5V
CN905	1	NC	
	2	WENB	Width encoder B
	3	WENA	Width encoder A
	4	SENB	Shift encoder B
	5	SENA	Shift encoder A
	6	GND	GND
CN906	1	GND	GND
	2	VRF	AF/RF VR 1
	3	VAF	AF/RF VR 2
	4	RENA	RIT encoder A
	5	RENB	RIT encoder B
	6	5D	5V
CN907	1	GND	GND
	2	VSQL	NB/SQL VR 1
	3	VNB	NB/SQL VR 2
	4	CENA	M.CH encoder A
	5	CENB	M.CH encoder B
	6	5D	5V
FINAL UNIT (X45-351X-XX) (A/5) : FINAL			
CN501	Coaxial	DRV	Drive input (From RF)
CN502	Coaxial	PO	TX signal output (To FILTER)
CN503	1	14S	13.8V
	2	14S	13.8V
	3	TXB	TX 13.8V
	4	GND	GND
	5	GND	GND
CN504	1	14V	13.8V
	2	14V	13.8V
	3	GND	GND

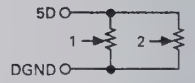

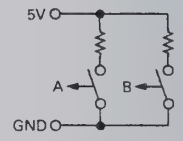

TERMINAL FUNCTION

CN No.	Pin No.	Name	Function
W501	Board	14F	Power supply 13.8V connecting harness
	in	14F	Power supply 13.8V connecting harness
		GND	Power supply 13.8V connecting harness
		GND	Power supply 13.8V connect ing harness
FIANL UNIT (X45-351X-XX) (B/5) : FILTER			
CN1	Coaxial	PO	Filter input signal
CN2	Coaxial	ATO	TX output signal (To AT)
CN3	1	8A	8V
	2	GND	GND
	3	GND	GND
	4	14S	14V
	5	14S	14V
	6	UCK2	Shift register clock
	7	UDA2	Shift register data
	8	ENF1	Shift register enable
	9	DGND	Digital GND
	10	TXB	TX power 8V
	11	VSF	Forward wave detection voltage
	12	VSR	Reflected wave detection voltage
CN4	1	ATA	Make for AT through/on relay
	2	28AT	24.5~30MHz
	3	25AT	21.5~24.5MHz
	4	18AT	18.5~21.5MHz
	5	14AT	14.5~18.5MHz
	6	10AT	10.5~14.5MHz
	7	7AT	4.0~7.5MHz
	8	4AT	2.5~4.0MHz
	9	GND	GND
	10	14S	14V
	11	GND	GND
W1	1	RL	TX/RX select signal output
	2	ANTS	ANT 1/2 select signal output
	3	GND	GND
FINAL UNIT (X45-351X-XX) (C/5) : CONNECTION			
CN401	1	15K	455kHz filter select "L" : Filter on
	2	3K	455kHz filter select "L" : Filter on
	3	6K	455kHz filter select "L" : Filter on
	4	TT	External AT tuning control (Pass through)
	5	TS	External AT tuning control (Pass through)
	6	UCK2	Pass through
	7	UDA2	Pass through
	8	ENF1	Pass through
	9	VSF	Pass through
	10	VSR	Pass through
	11	THP	Pass through
	12	14D	14V
	13	14D	14V
	14	14V	14V
	15	14V	14V
	16	PWS	Power switch on : "H"
	17	9P	PLL power 9V
	18	5P	PLL power 5V
	19	–6	–6V output
	20	GND	GND
CN402	1	8A	8V
	2	GND	GND
	3	GND	GND
	4	14S	13.8V
	5	14S	13.8V
	6	UCK2	Pass through
	7	UDA2	Pass through
	8	ENF1	Pass through
	9	DGND	Digital GND
	10	TXB	TX power 8V
	11	VSF	Pass through
	12	VSR	Pass through
CN403	1	14A	13.8V
	2	14S	13.8V
	3	8D	Digital 8V
	4	8A	Analog 8V
	5	APG	GND
	6	SPO3	Speaker output signal input
	7	SPG	Speaker GND
CN404	1	SPG	Speaker GND
	2	SP	Speaker output signal
CN405	1	14S	13.8V
	2	14S	13.8V
	3	AGND	Analog GND
	4	AGND	Analog GND
CN406	1	THP	Pass through
	2	TXB	Pass through
	3	14D	13.8V
	4	8D	Digital 8V
	5	14D	13.8V
	6	8A	Analog 8V
	7	GND	GND
	8	GND	GND
	9	14S	13.8V
	10	14S	13.8V
	11	14S	13.8V
	12	PSW	Power switch on : "H"
	13	14V	13.8V
CN407	1	14S	13.8V
	2	AGND	Analog GND
	3	TT	Pass through
	4	TS	Pass through
	5	GND	GND
CN410	Coaxial	LO3	Local LO3 8.375MHz (From PLL)
CN411	1	TIF	TX IF input
	2	GND	GND
	3	RIF	RX IF output
	4	GND	GND
CN412	Coaxial	TR88	8.83MHz
CN413	1	TXB	TX power 8V
	2	RXB	RX power 8V
	3	AGC	AGC line
FINAL UNIT (X45-351X-XX) (D/5) : AVR			
CN601	1	14V	13.8V
	2	14V	13.8V
	3	GND	GND
CN602	1	14S	13.8V
	2	14S	13.8V
	3	AGND	Analog GND
	4	AGND	Analog GND
CN603	1	THP	Thermal protection on : "H"
	2	TXB	TX 13.8V
	3	14D	13.8V
	4	8D	Digital 8V
	5	14D	Digital 13.8V
	6	8A	Analog 8V
	7	GND	GND
	8	GND	GND
	9	14S	13.8V
	10	14S	13.8V

AT coil tap band data

TERMINAL FUNCTION

CN No.	Pin No.	Name	Function
	11	14S	13.8V
	12	PSW	Power switch on : "H"
	13	14V	13.8V
CN604	1	14S	13.8V
	2	14S	13.8V
	3	TXB	TX 13.8V
	4	GND	GND
	5	GND	GND
CN605	1	MOT+	Moter drive +
	2	MOT –	Motor drive –
FINAL UNIT (X45-351X-XX) (E/5) : RELAY			
CN301	1	RL	TX/RX select signal input
	2	ANTS	ANT 1/2 select signal input
	3	GND	GND
CN302	Coaxial	ATO	TX signal input (From FILTER)
CN303	Coaxial	RAT	RX signal output (To RF)
CN304	Coaxial	AT1	Input/output to AT (RX : Output, TX : Input)
CN305	Coaxial	AT2	Input/output to AT (RX : Input, TX : Output)
CN306	TP		ANT1 GND
CN307	TP		ANT2 GND
W301	TP		ANT1 signal line
W303	TP		ANT2 signal line
AT UNIT (X53-3340-02)			
CN1	Coaxial	AT1	AT input
CN2	Coaxial	AT2	AT output
CN3	1	VRE	+5V reference voltage for A/D
	2	POD2	VC2 position detection, VR101 output
	3	GND	GND
	4	POD1	VC1 position detection, VR102 output
CN4	1	NC	
	2	M2–	Motor 2 drive –
	3	M2+	Motor 2 drive +
	4	M1–	Motor 1 drive –
	5	M1+	Motor 1 drive +
CN5	1	NC	
	2	F15	Power line 11~14V
	3	GND	GND
CN6	1	ATA	Make for AT through/on relay "L" : On
	2	NC	
CN7	1	ATG	GND for discriminating that is connected to microcomputer
	2	SPED	Motor speed control pulse
	3	APRE	Control selection "H" : Preset type, "L" : Auto tuning type
	4	VRE	+5V reference voltage for A/D
	5	PR22	Motor 2 control signal
	6	PR21	Motor 2 control signal
	7	POD2	VC2 position detection
	8	PR12	Motor 1 control signal
	9	PR11	Motor 1 control signal
	10	POD1	VC1 position detection
	11	GND	GND
CN101	1	28AT	24.5~30MHz
	2	15AT	21.5~24.5MHz
	3	NC	
	4	18AT	18.5~21.5MHz
	5	14AT	14.5~18.5MHz
	6	10AT	10.5~14.5MHz
	7	7AT	4.0~7.5MHz
	8	4AT	2.5~4.0MHz

AT coil tap band data

CN No.	Pin No.	Name	Function
	9	GND	GND
CONTROL UNIT (X53-356X-XX) (A/4) : CONTROL			
CN1	1	GND	GND
	2	NFMT	Not FM TX signal
	3	VB3	VCO selest signal
	4	VB2	VCO select signal
	5	VB1	VCO select signal
	6	VB0	VCO select signal
	7	UNL	PLL unlock signal
	8	GND	GND
	9	PLE2	PLL2 enable signal
	10	PLE1	PLL1 enable signal
	11	PCK	PLL serial clock
	12	PDA	PLL serial data
	13	14D	Digital 13.8V
	14	DLE3	DDS3 enable signal
	15	DLE2	DDS2 enable signal
	16	DLE1	DDS1 enable signal
	17	TXC	TX control signal
	18	GND	GND
	19	9P	PLL power 9V (Pass through)
	20	5P	PLL power 5V (Pass through)
CN2	1	GND	GND
	2	–6	–6V (Pass through)
	3	5P	PLL power 5V (Pass through)
	4	9P	PLL power 9V (Pass through)
	5	PSW	Power control signal
	6	14V	13.8V
	7	14V	13.8V
	8	14D	Digital 13.8V
	9	14D	Digital 13.8V
	10	THP	Thermal protection
	11	VSR	Reflected wave analog voltage
	12	VSF	Forward wave analog voltage
	13	ENF1	Enable for IC1 on FILTER board
	14	UDA2	Serial data for IC1 on FILTER board
	15	UCK2	Serial clock for IC1 on FILTER board
	16	TS	AT-300 control signal
	17	TT	AT-300 control signal
	18	6K	6kHz filter select signal
	19	3K	3kHz filter select signal
	20	15K	15kHz filter select signal
CN3	1	5D	Digital 5V
	2	MENA	Main encoder pulse A
	3	MENB	Main encoder pulse B
	4	DGND	Digital GND
CN4	1	NC	
	2	NC	
	3	SPED	Internal AT speed control signal
	4	APRE	Internal AT control select signal
	5	VRE	Reference voltage for A/D convertor
	6	PR22	Motor 2 control signal
	7	PR21	Motor 2 control signal
	8	POD2	Motor 2 position voltage
	9	PR12	Motor 1 control signal
	10	PR11	Motor 1 control signal
	11	POD1	Motor 1 position voltage
	12	GND	GND
CN5	1	GND	GND
	2	CTS	Communication inhibit signal from TS-870S
	3	RTS	Communication inhibit signal from personal computer
	4	RXD	TX data from TS-870S
	5	TXD	RX data from personal computer

TERMINAL FUNCTION

CN No.	Pin No.	Name	Function
	6	KEYS	Key jack sensing signal
	7	DASH	Electronic keyer dash signal
	8	DOT	Electronic keyer dot signal
	9	GND	GND
	10	H0	DSP control data bus
	11	H1	DSP control data bus
	12	H2	DSP control data bus
	13	H3	DSP control data bus
	14	H4	DSP control data bus
	15	H5	DSP control data bus
	16	H6	DSP control data bus
	17	H7	DSP control data bus
	18	HENA	DSP A enable signal
	19	HENB	DSP B enable signal
	20	HRW	DSP read/write control signal
CN6	1	GND	GND
	2	HA0	DSP control address bus
	3	HA1	DSP control address bus
	4	HA2	DSP control address bus
	5	GND	GND
	6	BEEP	Beep control signal
	7	MD	Microphone down signal
	8	MU	Microphone up signal
	9	SS	Standby switch
	10	GND	GND
	11	KEY	Key down signal
	12	DRST	DSP reset signal
	13	CKY	TX wave control signal
	14	RXC	RX control signal
	15	TXC	TX control signal
	16	AMUT	AF mute signal
	17	VCEN	TX-RX unit IC26 enable
	18	UCK2	TX-RX unit serial clock
	19	UDA2	TX-RX unit serial data
	20	DREN	DRU-3 control enable signal
	21	PLUL	TX-RX unit PLL unlock signal
	22	PLEN	TX-RX unit PLL control enable signal
	23	EOM	DRU-3 end of message
	24	VBSY	VS-2 busy signal
	25	STR	VS-2 synthesize control signal
	26	GND	GND
CN7	1	5D	Digital 5V
	2	VAGC	AGC VR analog voltage
	3	VKEY	KEY VR analog voltage
	4	VPRC	PROC VR analog voltage
	5	VMON	MONI VR analog voltage
	6	DGND	Digital GND
	7	NC	
	8	5D	Digital 5V
	9	VCAR	CAR VR analog voltage
	10	VDLY	DELAY VR analog voltage
	11	VMIC	MIC VR analog voltage
	12	VPWR	PWR VR analog voltage
	13	DGND	Digital GND
CN8	1	5D	Digital 5V
	2	14D	Digital 13.8V
	3	14D	Digital 13.8V
	4	ENL2	LCD driver control enable signal
	5	ENL3	LCD driver control enable signal
	6	UDA1	LCD driver control serial data
	7	UCK1	LCD driver control serial clock
	8	BLANK	LCD goes off control signal
	9	DIM	LCD dimmer control signal
	10	GND	GND

CN No.	Pin No.	Name	Function
CN9	1	BLNK	LED goes off control signal
	2	K0	Key input 0
	3	K1	Key input 1
	4	K2	Key input 2
	5	K3	Key input 3
	6	K4	Key input 4
	7	K5	Key input 5
	8	K6	key input 6
	9	K7	Key input 7
	10	PSW	Power switch input signal
	11	ENL4	Enable for IC501 on SW board
	12	ENL1	Enable for IC502~504 on SW board
	13	UDA1	Serial data for SW board
	14	UCK1	Serial clock for SW board
	15	LATC	AT tune LED control signal
	16	TXC	TX control signal (TX LED control)
	17	RES	IC501~504 reset signal
	18	5V	5V
	19	5D	Digital 5V
	20	DGND	Digital GND
CN10	1	NC	
	2	WENB	Width encoder pulse B
	3	WEBA	Width encoder pulse A
	4	SENB	Shift encoder pulse B
	5	SENA	Shift encoder pulse A
	6	GND	GND
	7	NC	
	8	5D	Digital 5V
	9	RENB	RIT encoder pulse B
	10	RENA	RIT encoder pulse A
	11	VAF	AF VR analog voltage
	12	VRF	RF VR analog voltage
	13	GND	GND
	14	NC	
	15	5D	Digital 5V
	16	CENB	Click encoder pulse B
	17	CENA	Click encoder pulse A
	18	VNB	NB VR analog voltage
	19	VSQL	SQL VR analog voltage
	20	GND	GND
CN11	1	NC	
	2	SS	Standby switch
	3	NC	
	4	GND	GND
	5	–6	–6V
	6	RBK	RF mute signal
	7	NC	
	8	ENR3	Enable for IC7 on RF board
	9	ENR2	Enable for IC2 on RF board
	10	ENR1	Enable for IC1 on RF board
	11	UDA2	Serial data for RF board
	12	UCK2	Serial clock for RF board
	13	NC	
	14	THP	Thermal protection
	15	ALM	ALC meter analog voltage
	16	VSR	Reflected wave analog voltage
	17	VSF	Forward wave analog voltage
	18	6K	6kHz filter select signal
	19	3K	3kHz filter select signal
	20	15K	15kHz filter select signal

CONTROL UNIT (X53-356X-XX) (B/4) : SW

CN501	1	DGND	Digital GND
	2	5D	Digital 5V

TERMINAL FUNCTION

CN No.	Pin No.	Name	Function
	3	5V	5V
	4	RES	IC501~504 reset signal
	5	TXC	TX control signal (TX LED control)
	6	LATC	AT tune LED control signal
	7	UCK1	Serial clock
	8	UDA1	Serial data
	9	ENL1	IC502~504 enable
	10	ENL4	IC501 enalbe
	11	PSW	Power switch output signal
	12	K7	Key output 7
	13	K6	Key output 6
	14	K5	Key output 5
	15	K4	Key output 4
	16	K3	Key output 3
	17	K2	Key output 2
	18	K1	Key output 1
	19	K0	Key output 0
	20	BLNK	LED goes off control signal
CONTROL UNIT (X53-356X-XX) (D/4) : MIC			
CN902	1	SS	Standby switch
	2	MD	Microphone down signal
	3	MU	Microphone up signal
	4	8M	8V for microphone
	5	MCG	GND
	6	MSG	MIC GND
	7	MIC	Microphone signal output
TX-RX UNIT (X57-4620-00)			
CN1	1	TIF	TX IF output (455kHz)
	2	GND	TIF GND
	3	RIF	RX IF input (455kHz)
	4	GND	RIF GND
CN3	1	LO4	Local 4 input (466kHz)
	2	GND	LO4 GND
	3	FMD	FM modulation output (To PLL)
	4	GND	FMD GND
CN4	1	MIC	Microphone signal input
	2	MSG	MIC GND
	3	MCG	GND
	4	SS	Microphone standby switch
	5	MU	Microphone up
	6	MD	Microphone down
	7	8M	8V for microphone
CN5	1	GND	GND
	2	DRMG	MIC GND
	3	DRM	Microphone signal output
	4	DRO	DRU-3 playback signal input
	5	5D	Digital 5V for DRU-3
	6	GND	GND
	7	EOM	End of message (End : "H")
	8	OVF	Over flow signal (Over flow : "L")
	9	DREN	DRU-3 enable
	10	SD	DRU-3 serial data
	11	SCK	DRU-3 clock
CN6	1	VO	Audio signal
	2	GND	GND
	3	SD	VS-2 control data
	4	SCK	VS-2 control data clock
	5	BSY	VS-2 busy
	6	STR	VS-2 synthesize control
	7	5C	5V for VS-2
	8	GND	GND
CN7	1	GND	GND

CN No.	Pin No.	Name	Function
	2	HA0	DSP data address
	3	HA1	DSP data address
	4	HA2	DSP data address
	5	GND	GND
	6	BEEP	Beep control signal
	7	MD	Microphone down signal
	8	MU	Microphone up signal
	9	SS	Standby switch
	10	GND	GND
	11	KEY	Key down signal
	12	DRST	DSP reset signal
	13	CKY	TX wave control signal
	14	RXC	RX control signal
	15	TXC	TX control signal
	16	AMUT	AF mute signal
	17	VCEN	IC26 enable
	18	UCK2	Serial clock for TX-RX unit
	19	UDA2	Serial data for TX-RX unit
	20	DREN	DRU-3 enable
	21	PLUL	TX-RX unit PLL unlock signal output
	22	PLEN	TX-RX unit PLL enable
	23	EOM	DRU-3 end of message signal output
	24	VBSY	VS-2 busy signal
	25	STR	VS-2 synthesize control signal
	26	GND	GND
CN8	1	GND	GND
	2	CTS	TX inhibit signal from TS-870S
	3	RTS	TX inhibit signal from personal computer
	4	RXD	TX data from TS-870S
	5	TXD	RX data from personal computer
	6	KEYS	Key jack sensing signal
	7	DASH	Electronic keyer dash signal
	8	DOT	Electronic keyer dot signal
	9	GND	GND
	10	H0	DSP data bus
	11	H1	DSP data bus
	12	H2	DSP data bus
	13	H3	DSP data bus
	14	H4	DSP data bus
	15	H5	DSP data bus
	16	H6	DSP data bus
	17	H7	DSP data bus
	18	HENA	DSP A enable signal
	19	HENB	DSP B enable signal
	20	HRW	DSP read/write control signal
CN9	1	14A	Analog 13.8V
	2	8D	Digital 8V
	3	14S	13.8V
	4	8A	Analog 8V
	5	APG	GND
CN10	1	SPI1	AF input when headphone through
	2	SPG	GND
	3	SPO1	Headphone AF output
CN11	1	GND	GND
	2	14S	13.8V
	3	8A	Analog 8V
	4	RXC	RX : "L"
	5	TXC	TX : "H"
	6	AGC	AGC voltage
	7	CKY	Keying signal
	8	SPO1	Speaker signal output
CN12	1	SPO3	Internal speaker AF output
	2	SPG	GND

TERMINAL FUNCTION

CN No.	Pin No.	Name	Function
CN13	Coaxial	REF	20MHz reference signal for PLL, DPS (From PLL)
J1	1	GND	GND
EXT.SP	2	NC	
	3	NC	
	4		External speaker signal output
	5		Signal input when external speaker not connected
J2	1	GND	GND
Paddle	2	NC	
	3	NC	
	4	NC	
	5	DASH	Electronic keyer dash signal
	6	DOT	Electronic keyer dot signal
	7	NC	
	8	NC	
	9	NC	
	10	KEYS	Key switch signal
	11	KEYS	Open when using paddle
J4	1		GND
RTTY	2		RTTY signal
	3		GND
	4		RTTY signal
J5	1	NC	
ACC2	2	NC	
	3	ANO	RX audio output
	4	GND	ANO GND
	5	PSQ	Squelch open : GND, Squelch close : open
	6	SMET	S-meter voltage output
	7	NC	
	8	GND	GND
	9	PKS	Standby switch when using PKD input (Front panel microphone input is muted)
	10	NC	
	11	PKD	TX input
	12	GND	PKD GND
	13	SS	Standby switch

CN No.	Pin No.	Name	Function
J6	1	GND	GND
KEY	2	GND	GND
	3	KEYS	Key jack sensing signal
	4	NC	
	5	KEY	Key down signal
J7	1	GND	GND
COM	2	NC	
	3	TXD	RX data from personal computer
	4	RXD	TX data from TS-870S
	5	NC	
	6	NC	
	7	CTS	TX inhibit signal from TS-870S
	8	RTS	TX inhibit signal from personal computer
	9	NC	
LCD ASSY (B38-0736-05)			
CN1	1	GND	GND
	2	DIM	LCD dimmer control signal
	3	BLANK	LCD goes off control signal
	4	UCK1	LCD driver control serial clock
	5	UDA1	LCD driver control serial data
	6	ENL3	LCD driver control enable signal
	7	ENL2	LCD driver control enable signal
	8	14D	Digital 13.8V
	9	14D	Digital 13.8V
	10	5D	Digital 5V

TS-870S PC BOARD VIEWS

LCD ASSY (B38-0736-05)
Component side view

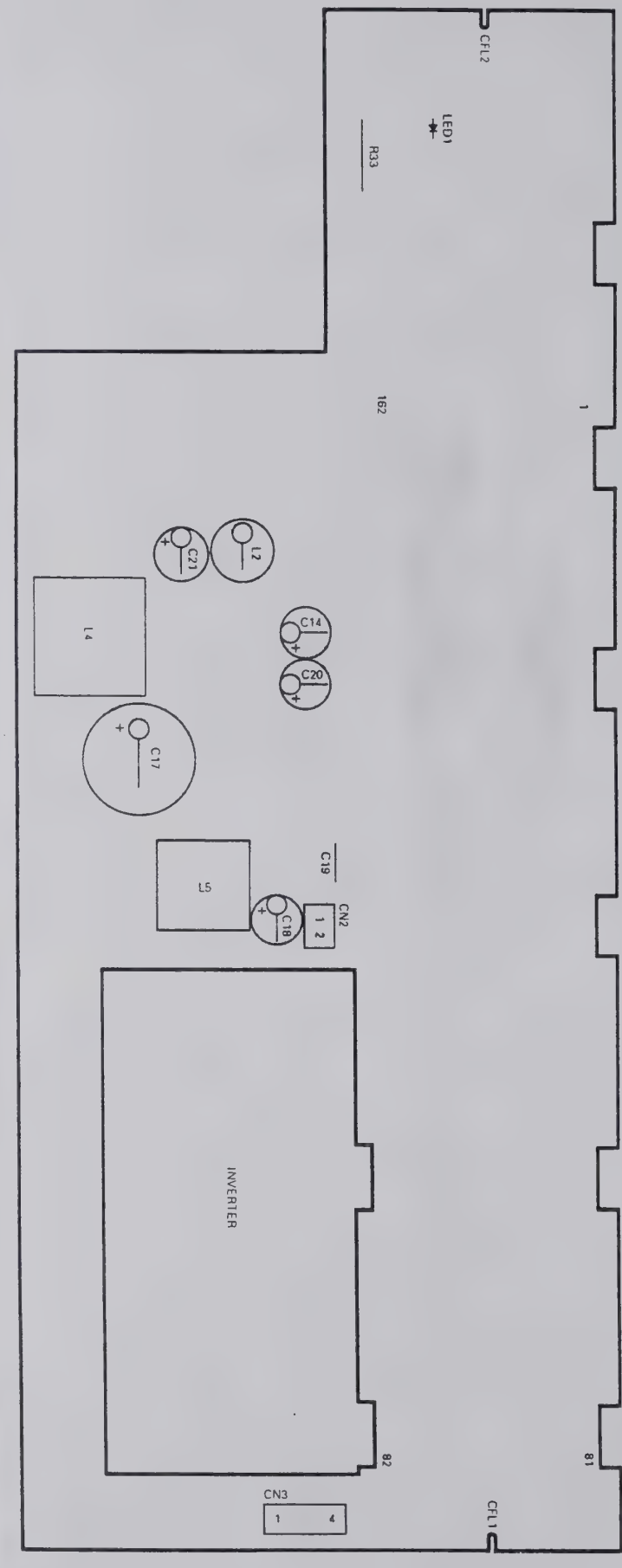

LCD ASSY (B38-0736-05)
Foil side view

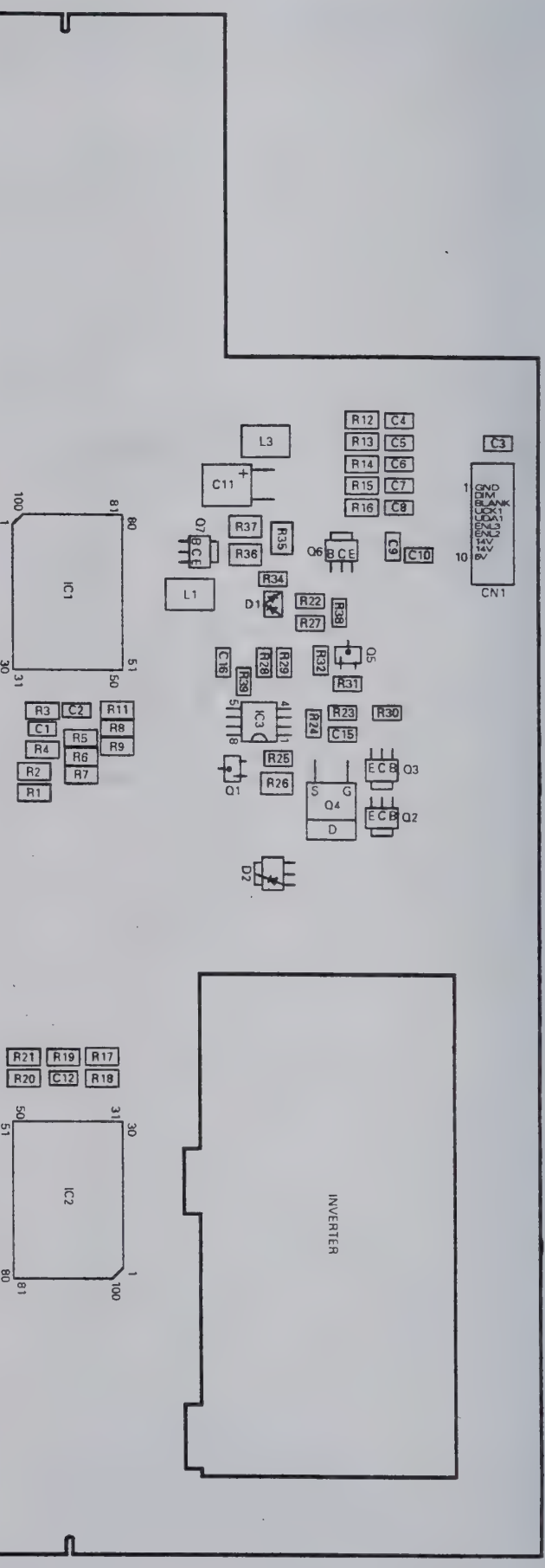

RF UNIT (X44-3210-00) (C/9)
Component side view

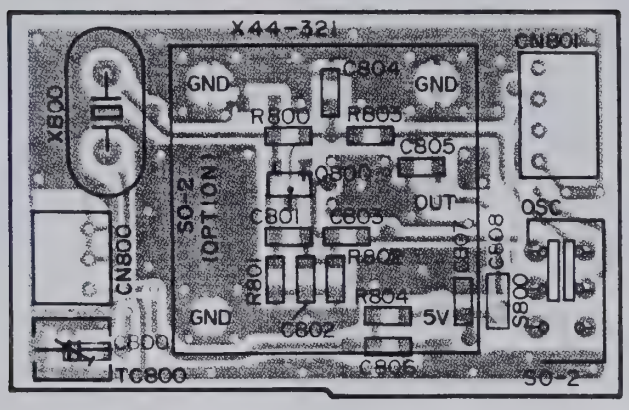

RF UNIT (X44-3210-00) (C/9)
Foil side view

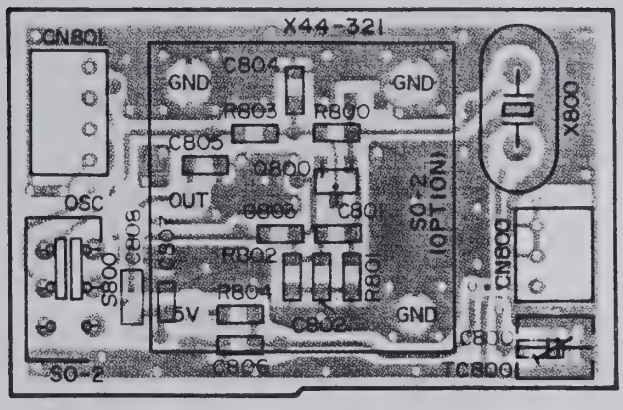

Component side
Foil side

VCO2 (X58-3390-03)
Component side view

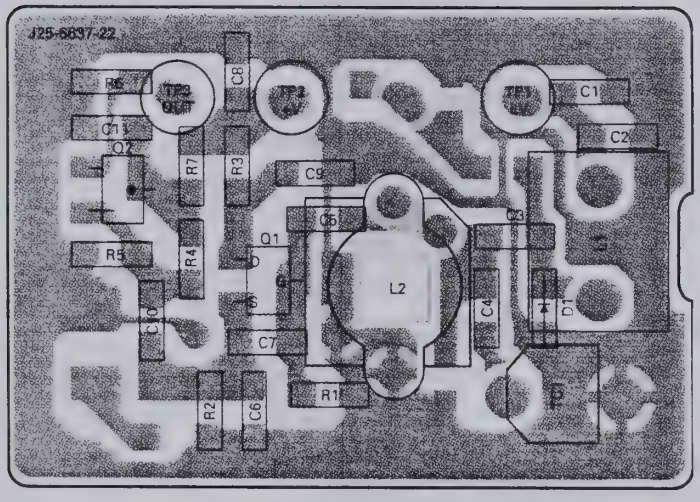

VCO2 (X58-3390-03)
Foil side view

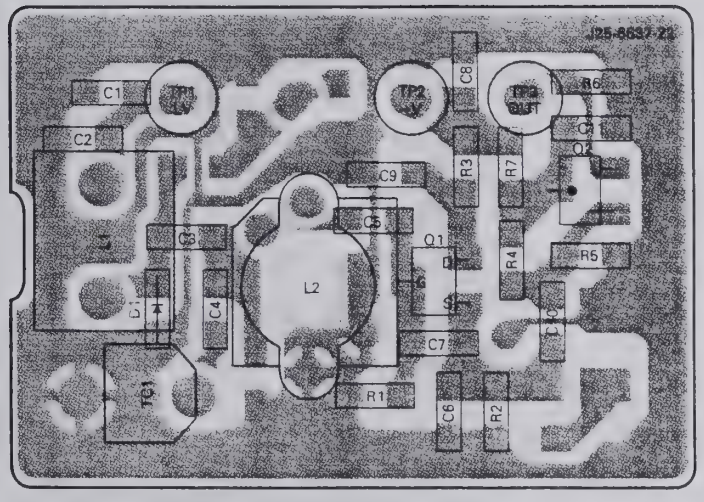

FINAL UNIT (X45-351X-XX) (A/5) : FINAL
Component side view

0-00 : K,P,M,M2,X
2-71 : E,E2,E3,E9

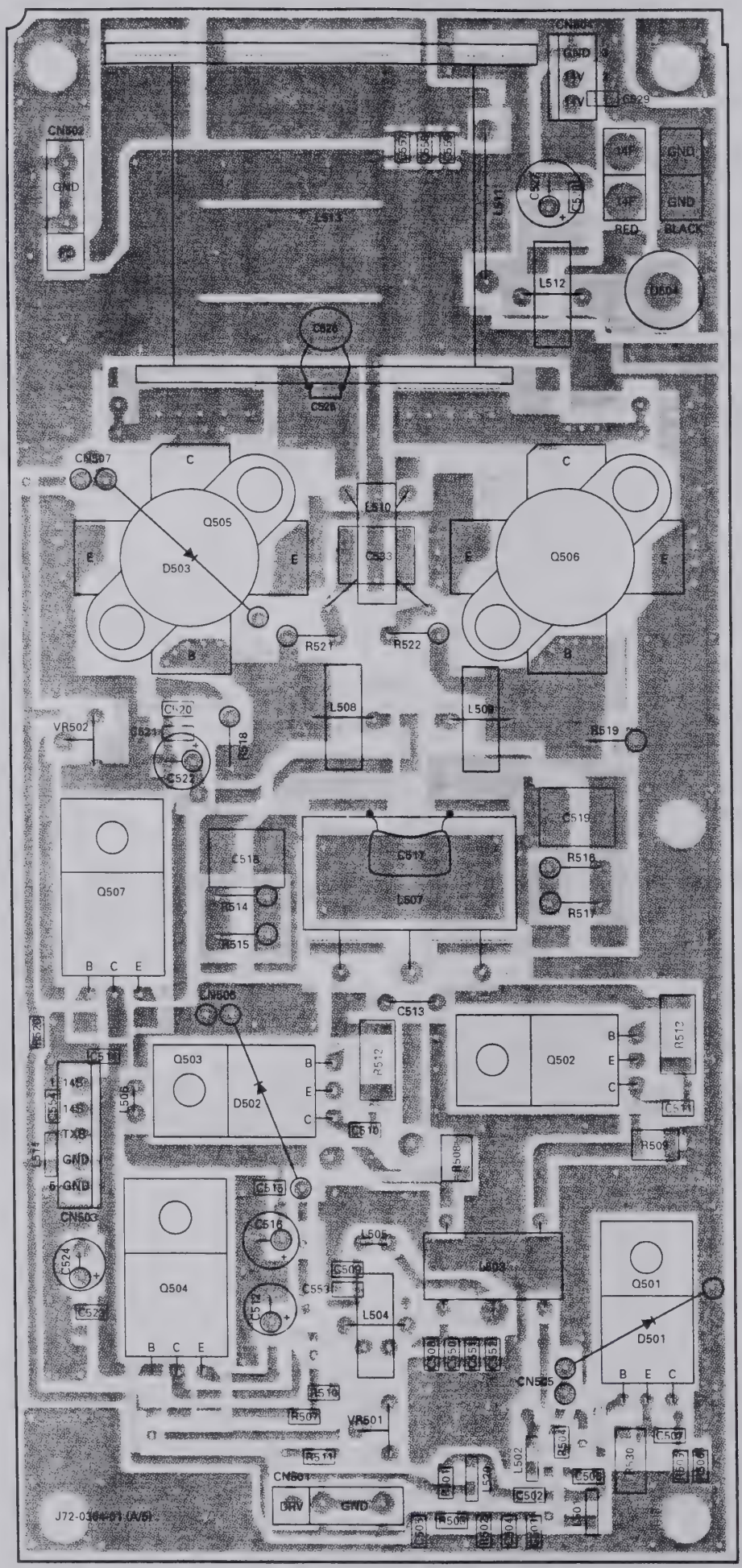

Component side
Foil side

FINAL UNIT (X45-351X-XX) (A/5) : FINAL

Foil side view

0-00 : K,P,M,M2,X

2-71 : E,E2,E3,E9

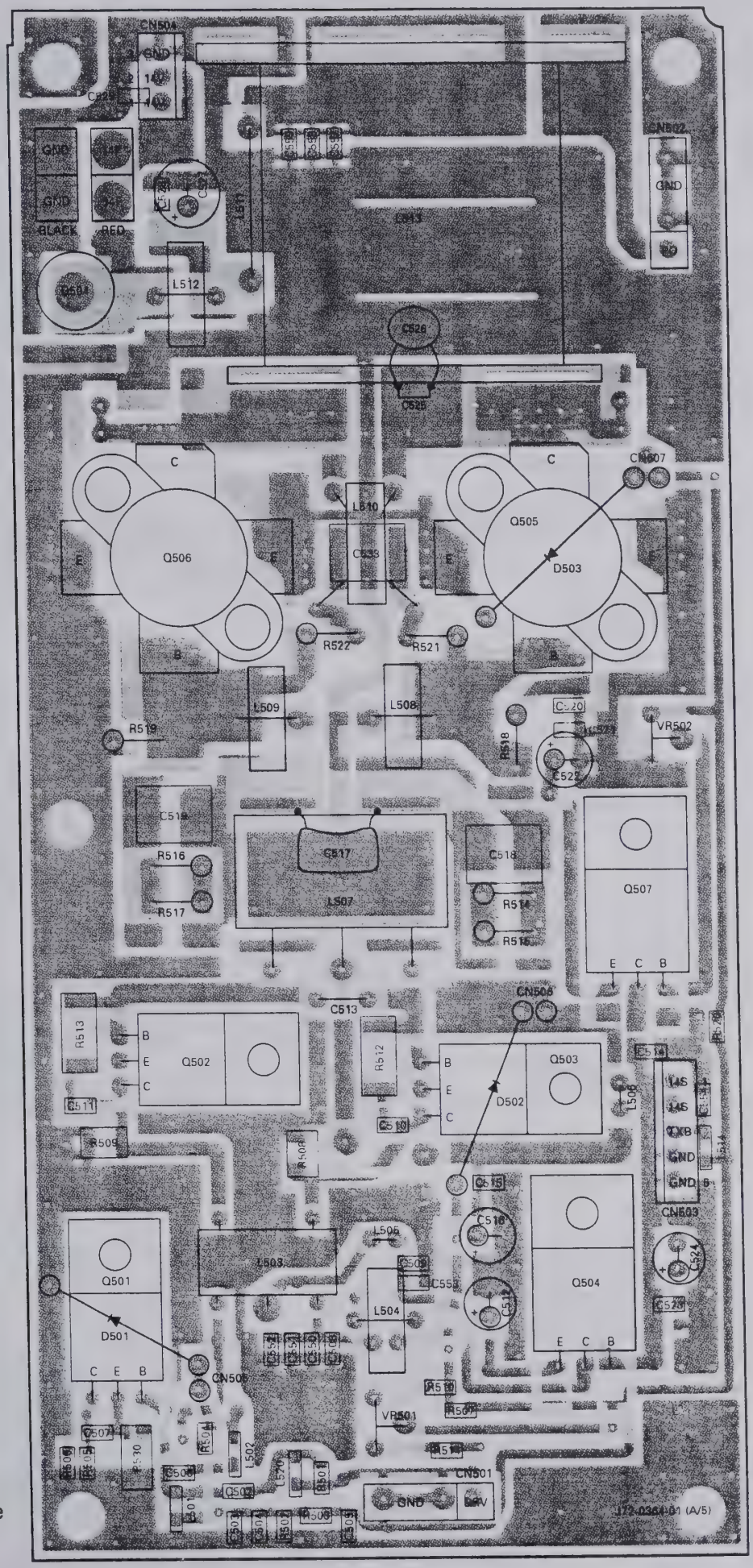

Component side

Foil side

TS-870S PC BOARD VIEW

FINAL UNIT (X45-351X-XX) (B/5) : FILTER

Component side

Foil side

Component side view 0-00 : K,P,M,M2,X 2-71 : E,E2,E3,E9

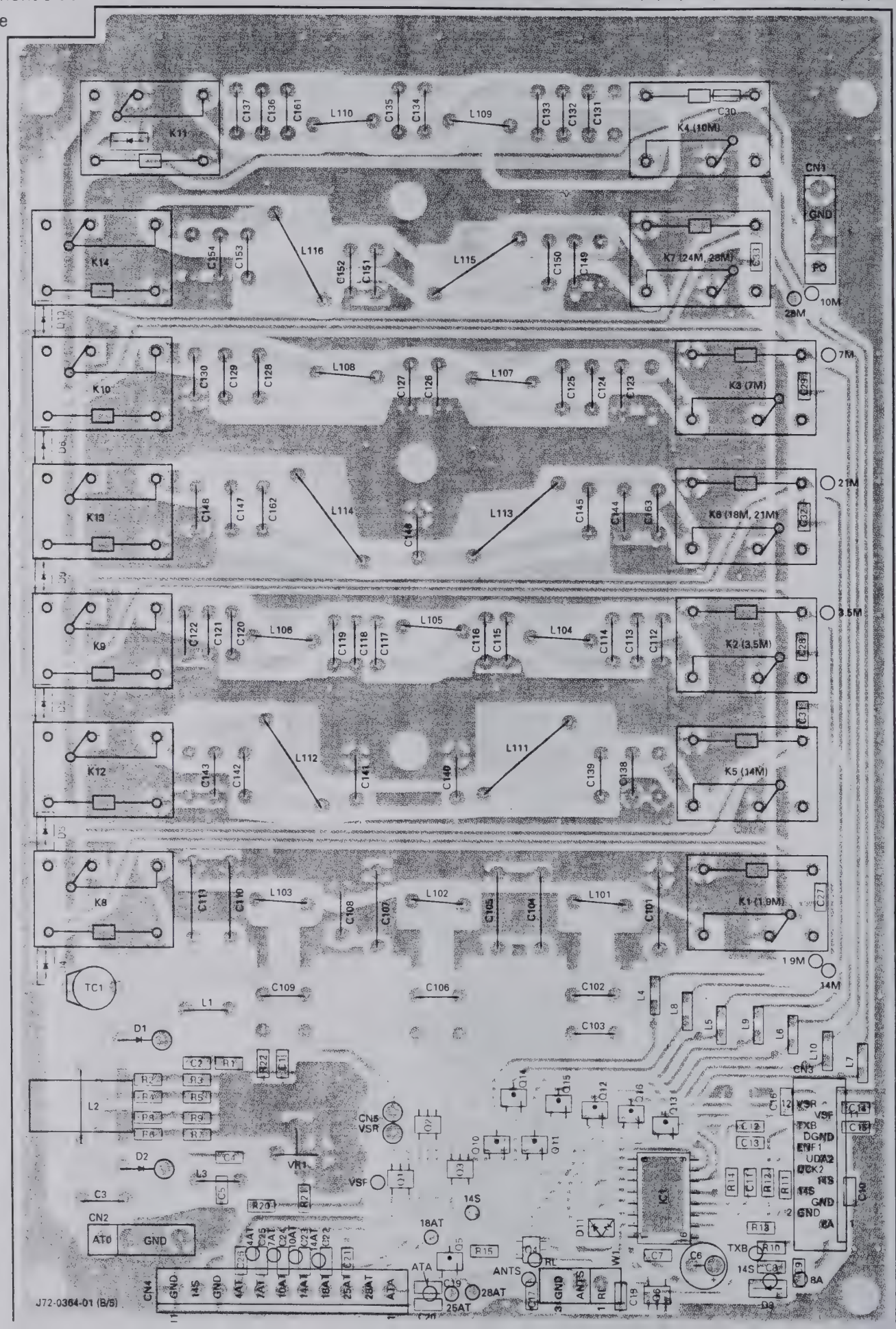

Foil side view 0-00 : K,P,M,M2,X 2-71 : E,E2,E3,E9

Component side
Foil side

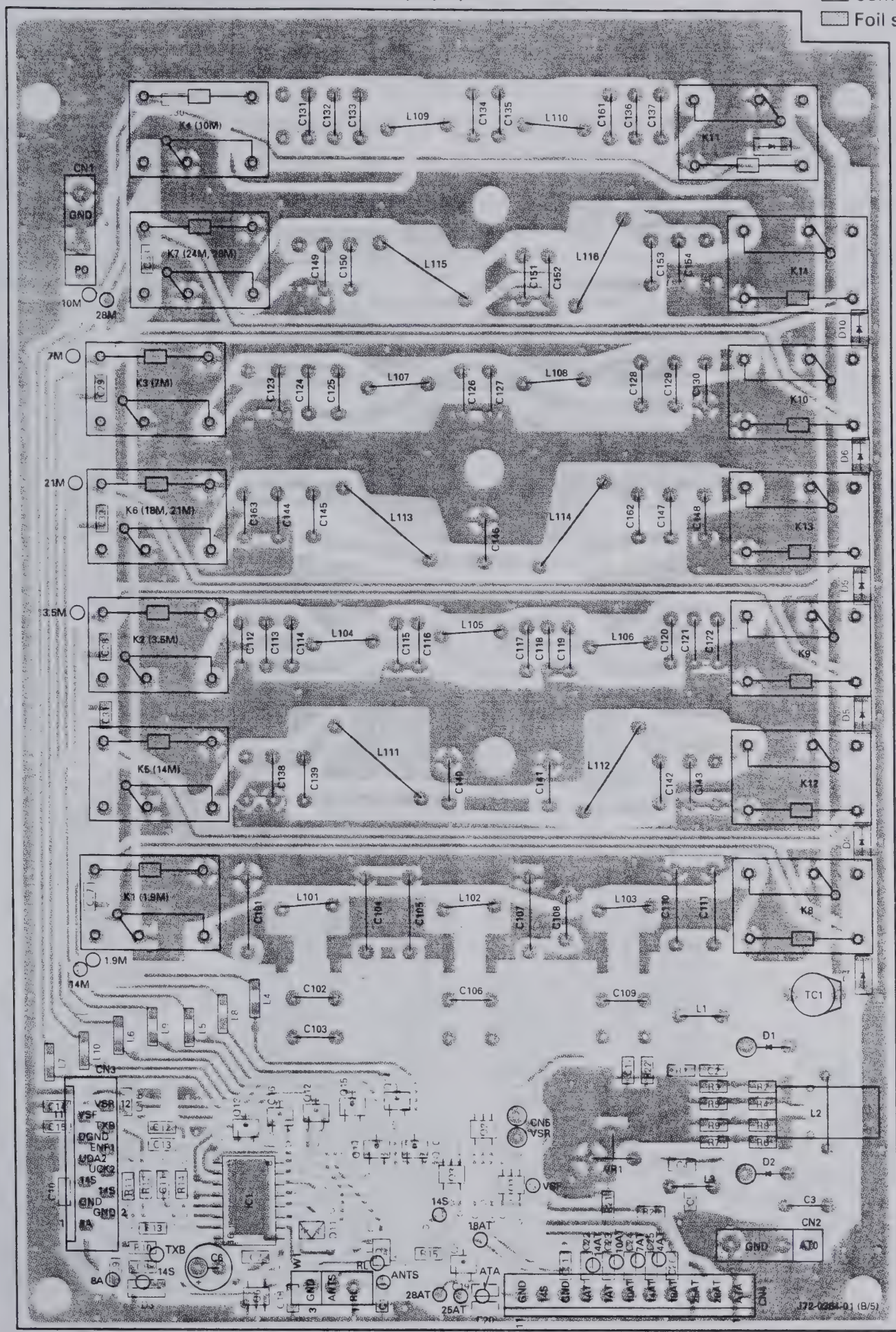

TS-870S PC BOARD VIEWS

FINAL UNIT (X45-351X-XX) (D/5) : AVR
Component side view
0-00 : K,P,M,M2,X
2-71 : E,E2,E3,E9

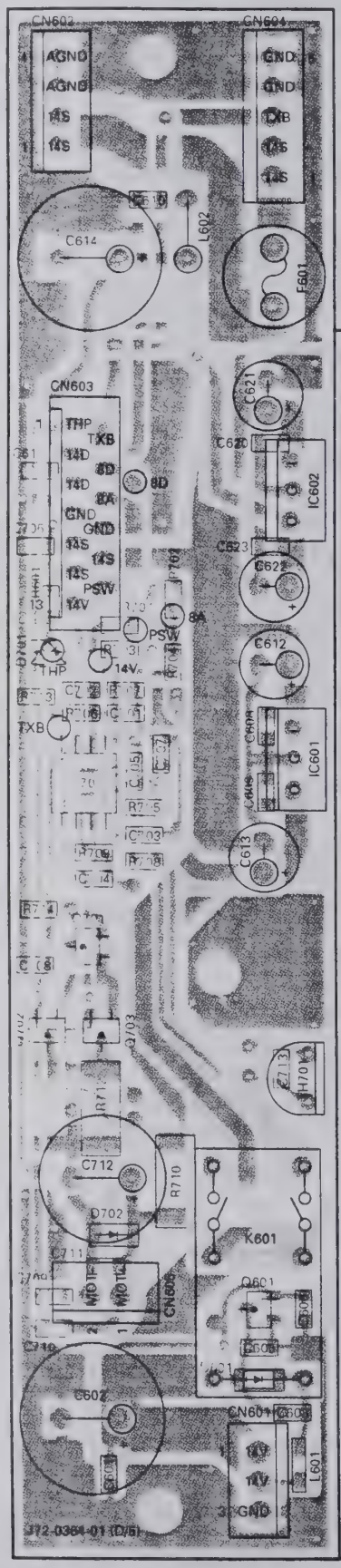

FINAL UNIT (X45-351X-XX) (E/5) : RELAY
Component side view
0-00 : K,P,M,M2,X
2-71 : E,E2,E3,E9

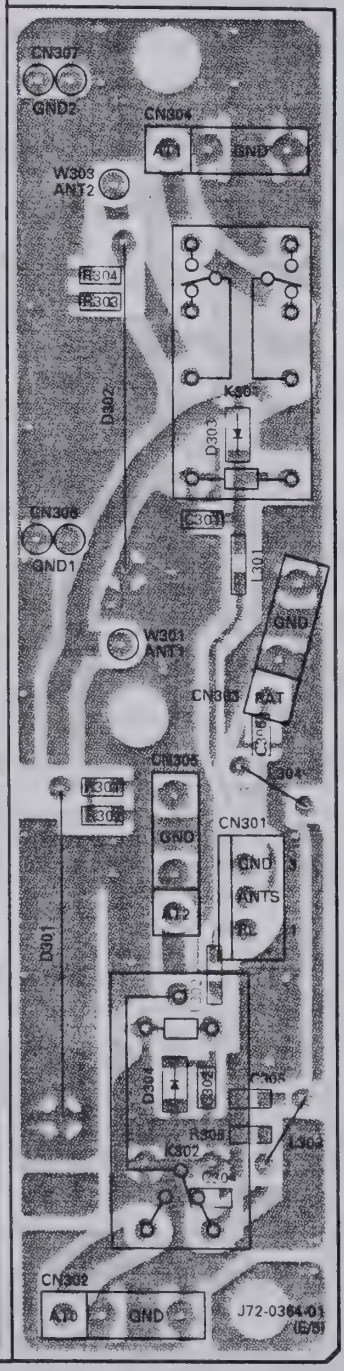

FINAL UNIT (X45-351X-XX) (E/5) : RELAY
Foil side view
0-00 : K,P,M,M2,X
2-71 : E,E2,E3,E9

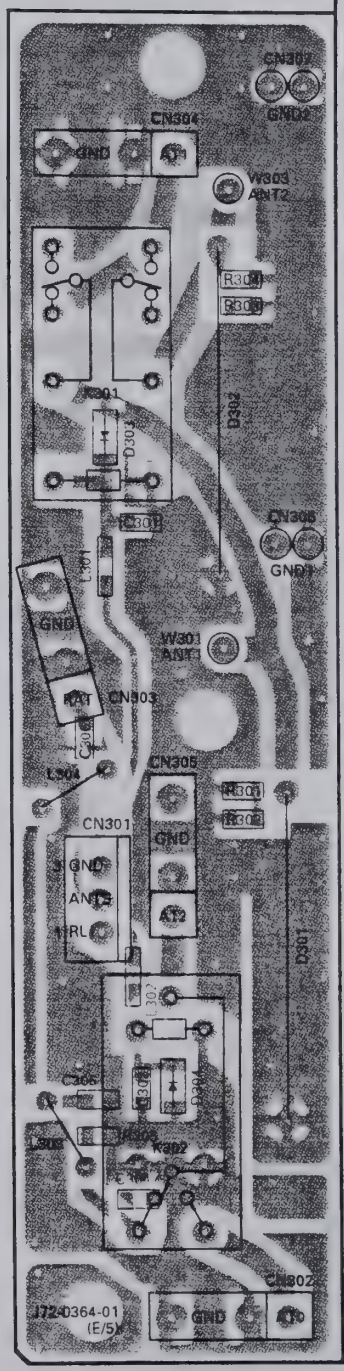

FINAL UNIT (X45-351X-XX) (D/5) : AVR
Foil side view
0-00 : K,P,M,M2,X
2-71 : E,E2,E3,E9

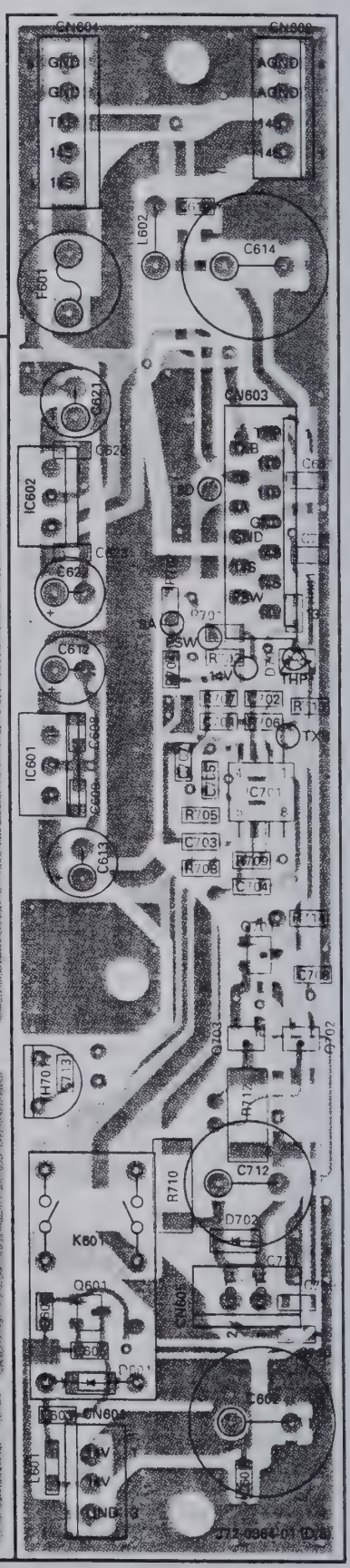

Component side
Foil side

TS-870S PC BOARD VIEWS

CONTROL UNIT (X53-356X-XX) (D/4) : MIC
Component side view

0-11 : K,P 0-21 : M 0-22 : M2 0-71 : X
2-71 : E 2-72 : E2 2-73 : E3 2-74 : E9

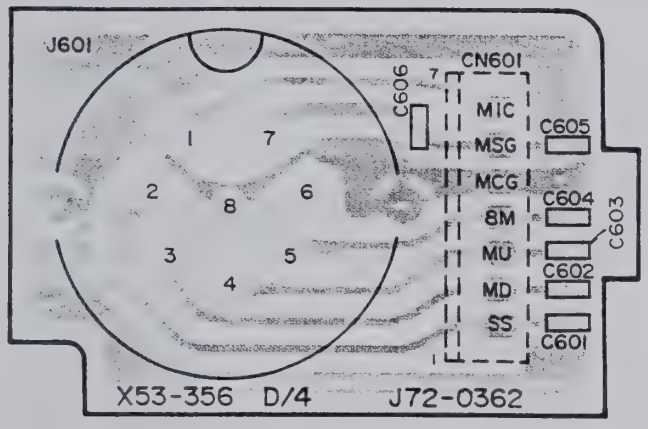

CONTROL UNIT (X53-356X-XX) (D/4) : MIC
Foil side view

0-11 : K,P 0-21 : M 0-22 : M2 0-71 : X
2-71 : E 2-72 : E2 2-73 : E3 2-74 : E9

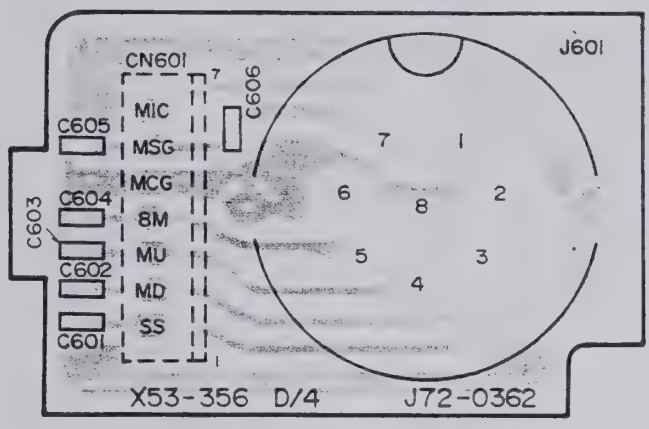

Component side
Foil side

PC BOARD VIEW TS-870S

FINAL UNIT (X45-351X-XX) (C/5)
: CONNECTION Foil side view

0-00 : K,P,M,M2,X
2-71 : E,E2,E3,E9

2SA1162
2SC2712

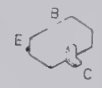

2SD1406

2SD1624

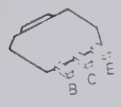

3SK131

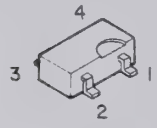

UPC7805H

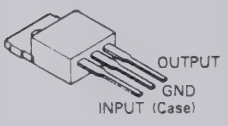

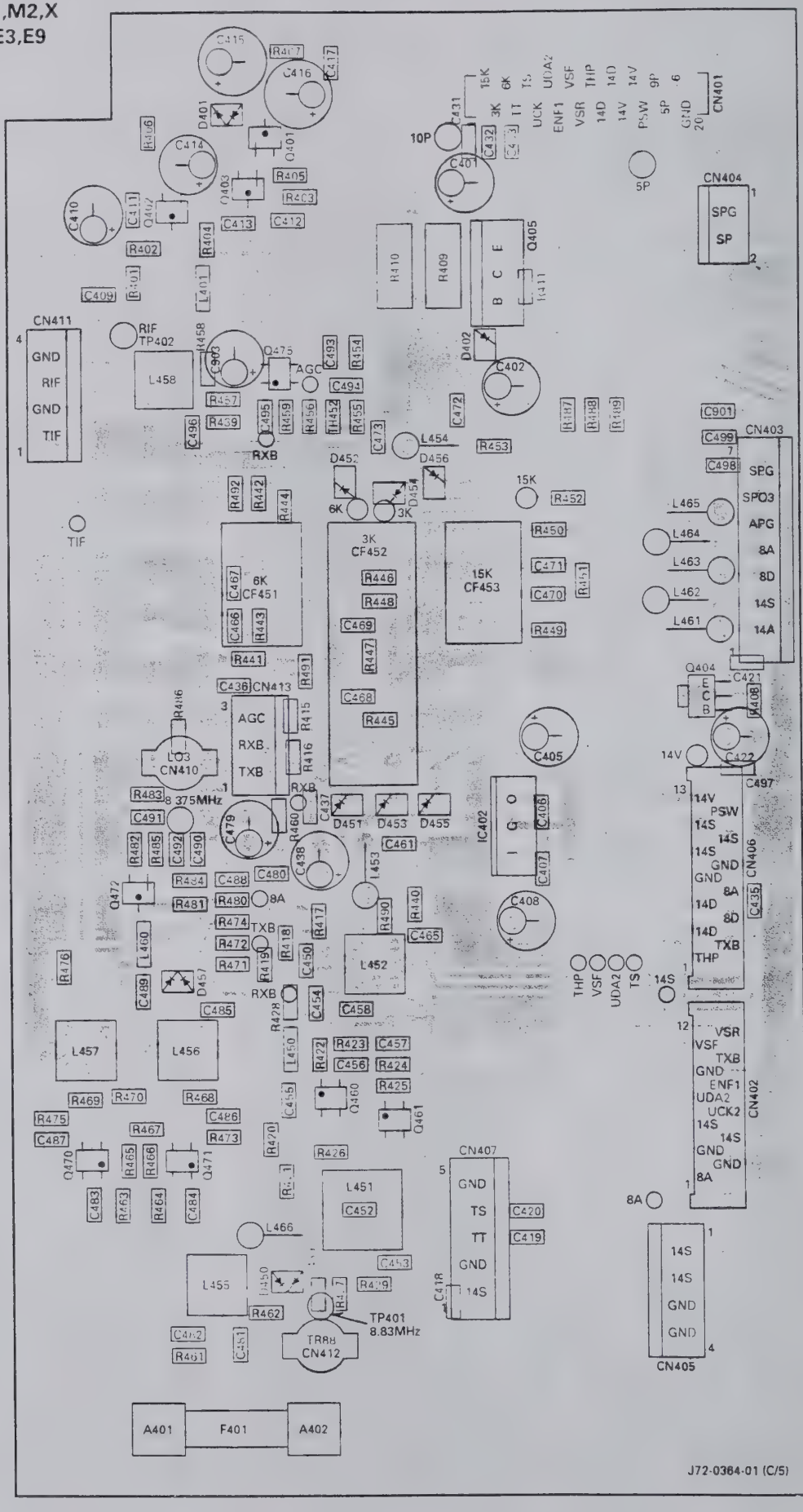

Component side
Foil side

DRU-3 (DIGITAL RECORDING UNIT)

DRU-3 Circuit Diagram

X43-3090-20

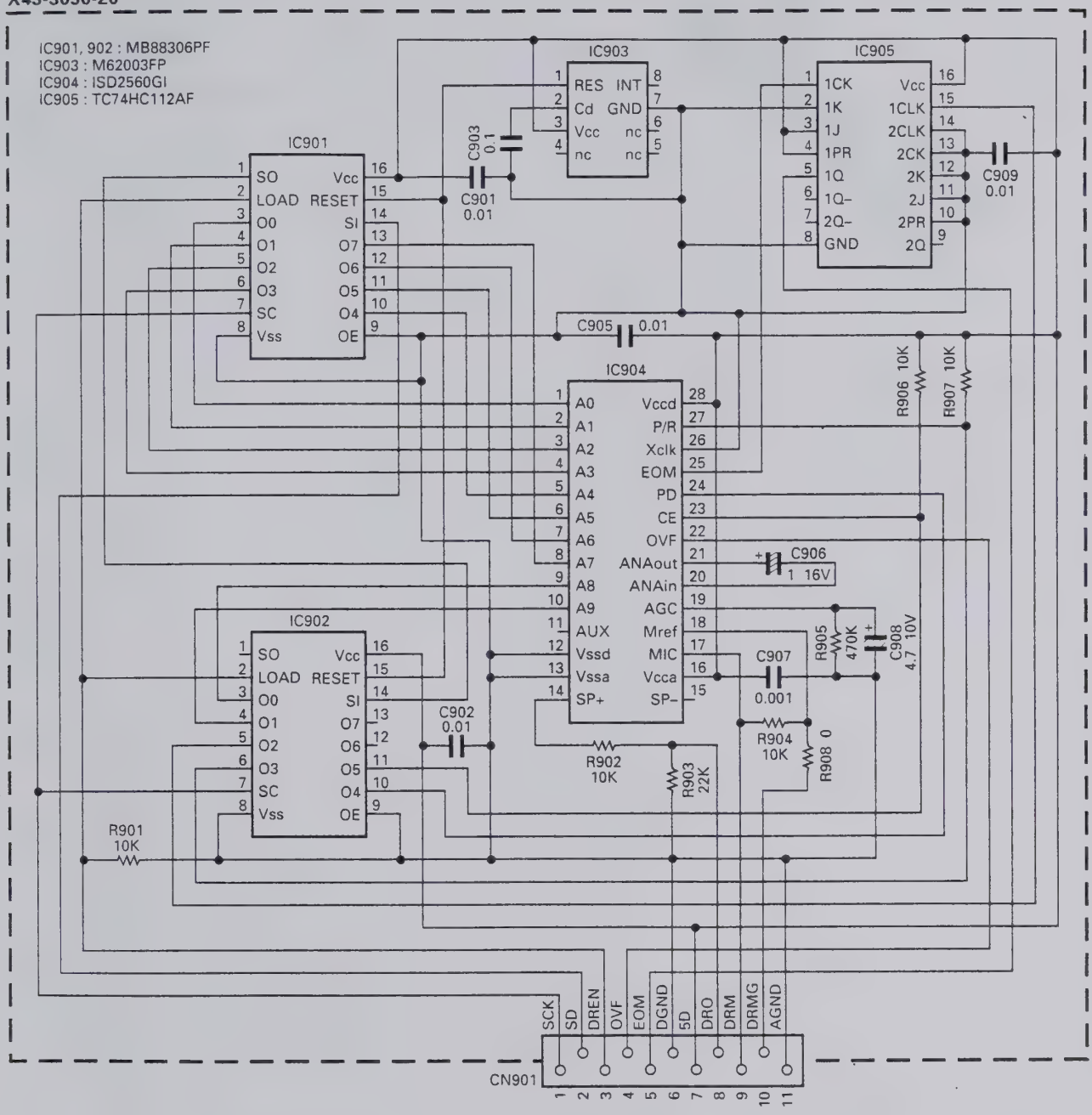

PG-2Z (DC CABLE)

PG-2Z External View

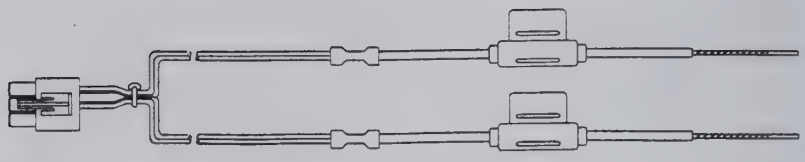

PG-2Z Parts List

Parts No.	New parts	Description
E30-3157-15		DC cable assy
F05-2531-05		Fuse (25A/32V)

SPECIFICATIONS

	Item			Rating
GENERAL	Mode			J3E (LSB, USB), A1A (CW), A3E (AM), F3E (FM), F1D (FSK)
	Number of memory channels			100
	Antenna impedance			50Ω (With Antenna Tuner 20 to 150Ω)
	Supply voltage			DC 13.8V ± 15%
	Grounding method			Negative ground
	Current	Transmit (Max.)		20.5A
		Receive (No signal)		2A
	Usable temperature range			–10°C to +50°C (+14°F to +122°F)
	Frequency stability (–10°C to +50°C)			Within ±10PPM
	Frequency accuracy (At room temperature)			Within ±10PPM
	Dimensions [W x H x D] (Projections included)			330 x 120 x 334 mm/13.0 x 4.72 x 13.1 in (339 x 135 x 375 mm/13.3 x 5.31 x 14.8 in)
	Weight			Approx. 11.5kg (25lbs)
TRANSMITTER	Frequency range	160m band		1.8*1 to 2.0*2MHz
		80m band		3.5 to 4.0*3MHz
		40m band		7.0 to 7.3*4MHz
		30m band		10.1 to 10.15MHz
		20m band		14.0 to 14.35MHz
		17m band		18.068 to 18.168MHz
		15m band		21.0 to 21.45MHz
		12m band		24.89 to 24.99MHz
		10m band		28.0 to 29.7MHz
	Output power*5	SSB, CW, FSK, FM	Max.	100W
			Min.	20W or less
		AM	Max.	25W
			Min.	20W or less
	Modulation	SSB		Balanced
		FM		Reactance
		AM		Low level
	Spurious emissions			–60dB or less
	Carrier suppression			50dB or more
	Unwanted sideband suppression (Modulation frequency 1.0kHz)			50dB or more
	Maximum frequency deviation (FM)	Wide		±5kHz or less
		Narrow		±2.5kHz or less
	Transmit frequency characteristics (–6dB) (TX lower cutoff : 300Hz, TX bandwidth : 2.3kHz)			300 to 2600Hz
	XIT shift frequency range			±9.99kHz
	Microphone imppedance			600Ω

*1 1.81MHz : Europe, France, Holland; 1.83MHz : Belgium, Spain

*2 1.85MHz : Belgium, France, Holland, Spain

*3 3.8MHz : Europe, Belgium, France, Holland, Spain

*4 7.1MHz : Europe, Belgium, France, Holland, Spain

*5 Belgium, Spain : 10W fixed on 160m band

TS-870S

SPECIFICATIONS

	Item			Rating
RECEIVER	Circuit type			Quadruple conversion superheterodyne
	Frequency range			100kHz to 30MHz
	Intermediate frequency			1st : 73.05MHz, 2nd : 8.83MHz, 3rd : 455kHz, 4th : 11.3kHz
	Sensitivity	SSB, CW, FSK (At 10dB (S+N)/N)	100kHz to 500kHz	1μV or less
			500kHz to 1.62MHz*6	4μV or less
			1.62MHz*6 to 24.5MHz	0.2μV or less
			24.5MHz to 30MHz	0.13μV or less
		AM (At 10dB (S+N)/N)	100kHz to 500kHz	2μV or less
			500kHz to 1.62MHz*6	31.6μV or less
			1.62MHz*6 to 24.5MHz	2μV or less
			24.5MHz to 30MHz	2μV or less
		FM (At 12dB SINAD)	28MHz to 30MHz	0.25μV or less
	Selectivity	SSB Lo : 300Hz, Hi : 2600Hz		–6dB : 2.3kHz, –60dB : 3.3kHz
		CW Width : 200Hz		–6dB : 200Hz, –60dB : 450Hz
		FSK Width : 500Hz		–6dB : 500Hz, –60dB : 1000Hz
		AM Lo : 100Hz, Hi : 4000Hz		–6dB : 9kHz, –60dB : 12kHz
		FM Width : 14kHz		–6dB : 14kHz, –60dB : 18kHz
	Image rejection (1.8MHz to 30MHz)			80dB or more
	1st IF rejection (1.8MHz to 30MHz)			80dB or more
	Notch filter atteneuation			40dB or more
	RIT shift frequency range			±9.99kHz
	Squelch sensitivity	SSB, CW, FSK, AM	100kHz to 500kHz	2μV or less
			500kHz to 1.62MHz*6	20μV or less
			1.62MHz*6 to 30MHz	2μV or less
		FM	28MHz to 30MHz	0.25μV or less
	Audio output (8Ω, 10% distortion)			1.5W or more
	Audio output impedance			8Ω

*6 1.705MHz : Canada, U.S.A.

Specifications are subject to change without notice or obligation due to ongoing technological developments.

KENWOOD CORPORATION
14-6, Dogenzaka 1-chome, Shibuya-ku, Tokyo 150, Japan

KENWOOD SERVICE CORPORATION
P.O. BOX 22745, 2201 East Dominguez Street, Long Beach, CA 90801-5745, U.S.A.

KENWOOD ELECTRONICS LATIN AMERICA S.A.
P.O. BOX 55-2791 Piso 6 Plaza Chase Cl. 47 y Aquilino de la Guardio Panama, Republic of Panama

KENWOOD ELECTRONICS CANADA INC.
6070 Kestrel Road, Mississauga, Ontario, Canada L5T 1S8

KENWOOD ELECTRONICS DEUTSCHLAND GMBH
Rembrücker Str. 15, 63150 Heusenstamm, Germany

KENWOOD ELECTRONICS BENELUX N.V.
Mechelsesteenweg 418 B-1930 Zaventem, Belgium

TRIO-KENWOOD FRANCE S.A.
13, Boulevard Ney, 75018 Paris, France

TRIO-KENWOOD U.K. LIMITED
KENWOOD House, Dwight Road, Watford, Herts., WD1 8EB United Kingdom

KENWOOD ELECTRONICS NEDERLAND B.V.
Amsterdamseweg 35, 1422 AC Uithoorn, The Netherlands

KENWOOD ELECTRONICS ITALIA S.p.A.
Via G. Sirtori, 7/9 20129 Milano, Italy

KENWOOD IBERICA S.A.
Bolivia, 239-08020 Barcelona, Spain

KENWOOD ELECTRONICS AUSTRALIA PTY. LTD.
(A.C.N. 001 499 074)
P.O. Box 504, 8 Figtree Drive, Australia Centre, Homebush, N.S.W. 2140, Australia

KENWOOD & LEE ELECTRONICS, LTD.
Unit 3712-3724, Level 37, Tower one Metroplaza, 223 Hing Fong Road, Kwai Fong, N.T., Hong Kong

HF TRANSCEIVER

TS-870S

SERVICE MANUAL

KENWOOD

© 1995-8 PRINTED IN JAPAN
B51-8296-00(N) 1360

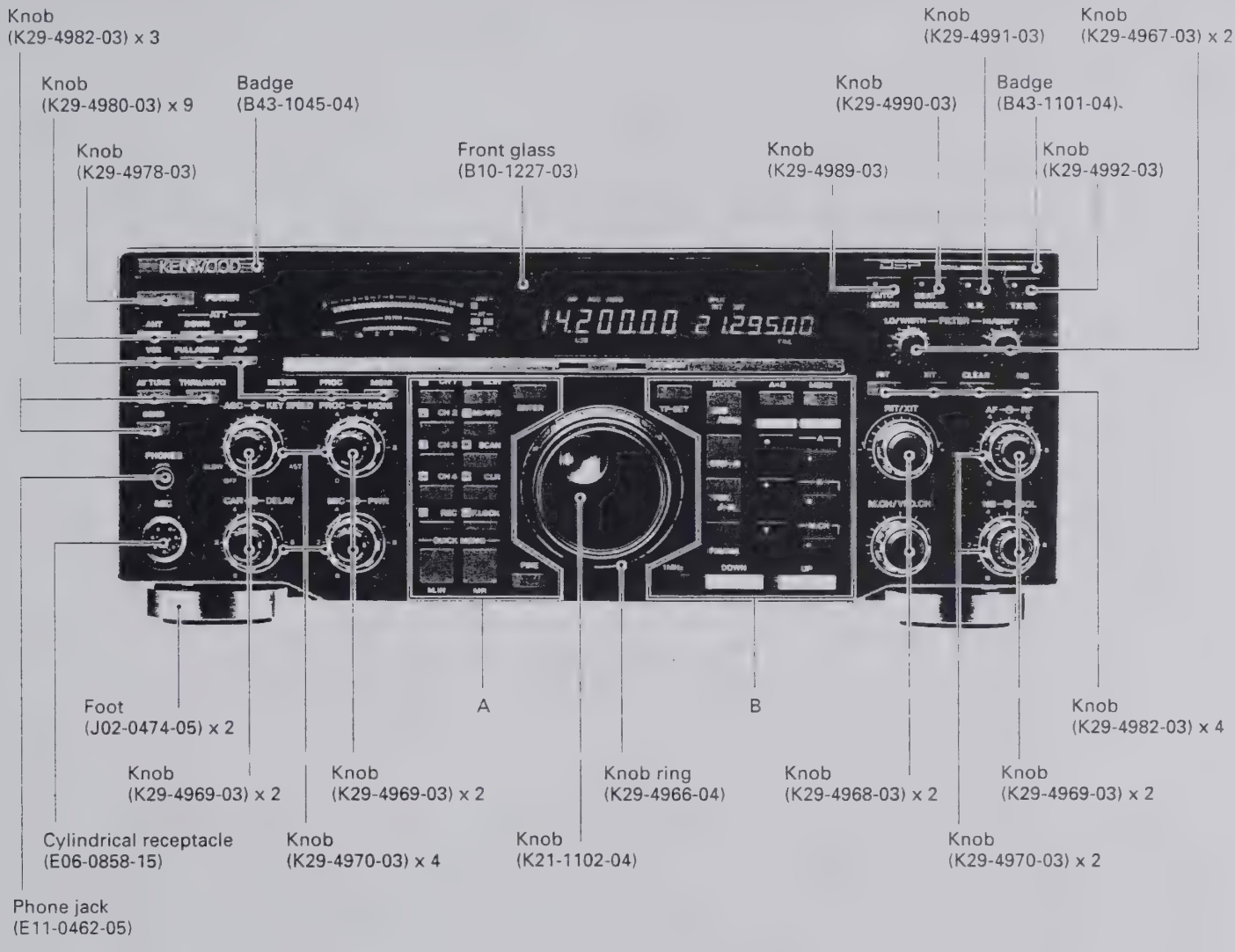

A

Knob (K29-4982-03)	Knob (K29-4982-03)	Knob (K29-4982-03)
Knob (K29-4982-03)	Knob (K29-4982-03)	
Knob (K29-4982-03)	Knob (K29-4982-03)	
Knob (K29-4982-03)	Knob (K29-4982-03)	
Knob (K29-4980-03)	Knob (K29-4980-03)	
Knob (K29-4984-03)	Knob (K29-4984-03)	Knob (K29-4982-03)

B

Knob (K29-4982-03)	Knob (K29-4985-03)	Knob (K29-4982-03)	Knob (K29-4982-03)
	Knob (K29-4986-03)	Knob (K29-4983-03)	Knob (K29-4981-03)
	Knob (29-4987-03)	Knob (K29-4983-03)	Knob (K29-4981-03)
	Knob (K29-4988-03)	Knob (K29-4983-03)	Knob (K29-4981-03)
Knob (K29-4982-03)	Knob (K29-4979-03)		Knob (K29-4979-03)

CONTENTS

CIRCUIT DESCRIPTION 3
DESCRIPTION OF COMPONENTS 45
SEMICONDUCTOR DATA 53
PARTS LIST 58
EXPLODED VIEW 81
PACKING 88
ADJUSTMENT 89
TERMINAL FUNCTION 104
CIRCUIT DIAGRAMS / PC BOARD VIEWS
- LCD ASSY (B38-0736-05) 110
- RF UNIT (X44-3210-00) (A/9) : RF 113
- RF UNIT (X44-3210-00) (B/9) : PLL 117
- RF UNIT (X44-3210-00) (C/9) 127
- VCO2 (X58-3390-03) 127
- FINAL UNIT (X45-351X-XX) (A/5) : FINAL 128
- FINAL UNIT (X45-351X-XX) (B/5) : FILTER 130
- FINAL UNIT (X45-351X-XX) (D/5) : AVR 132
- FINAL UNIT (X45-351X-XX) (E/5) : RELAY 132
- AT UNIT (X53-3340-02) (A/2) 137
- AT UNIT (X53-3340-02) (B/2) 139
- CONTROL UNIT (X53-356X-XX) (A/4) : CONTROL 143
- CONTROL UNIT (X53-356X-XX) (B/4) : SW 147
- TX-RX UNIT (X57-4620-00) 155
- RF UNIT (X44-3210-00) (D/9) 169
- RF UNIT (X44-3210-00) (E/9) 169
- RF UNIT (X44-3210-00) (F/9) 170
- RF UNIT (X44-3210-00) (G/9) 170
- RF UNIT (X44-3210-00) (H/9) 171
- RF UNIT (X44-3210-00) (I/9) 171
- FINAL UNIT (X45-351X-XX) (C/5) : CONNECTION 172
- CONTROL UNIT (X53-356X-XX) (D/4) : MIC 174

SCHEMATIC DIAGRAM 175
BLOCK DIAGRAM 179
LEVEL DIAGRAM 183
DRU-3 (DIGITAL RECORDING UNIT) 185
PG-2Z (DC CABLE) 188
SPECIFICATIONS 189

CIRCUIT DESCRIPTION

Frequency Configuration

The TS-870S is quadruple conversion in receive mode. As a transmitter, it is quadruple conversion in non-FM modes and double conversion in FM mode.

The fourth 11.3kHz IF signal is converted from analog to digital, connected to the DSP in receive mode, and decoded. In transmit mode, the microphone input signal is converted from analog to digital and applied to the DSP. It is converted from digital to analog, passed through a mixer, and becomes the 455kHz TIF signal. In FM mode, however, only 455kHz carriers are output from the DSP.

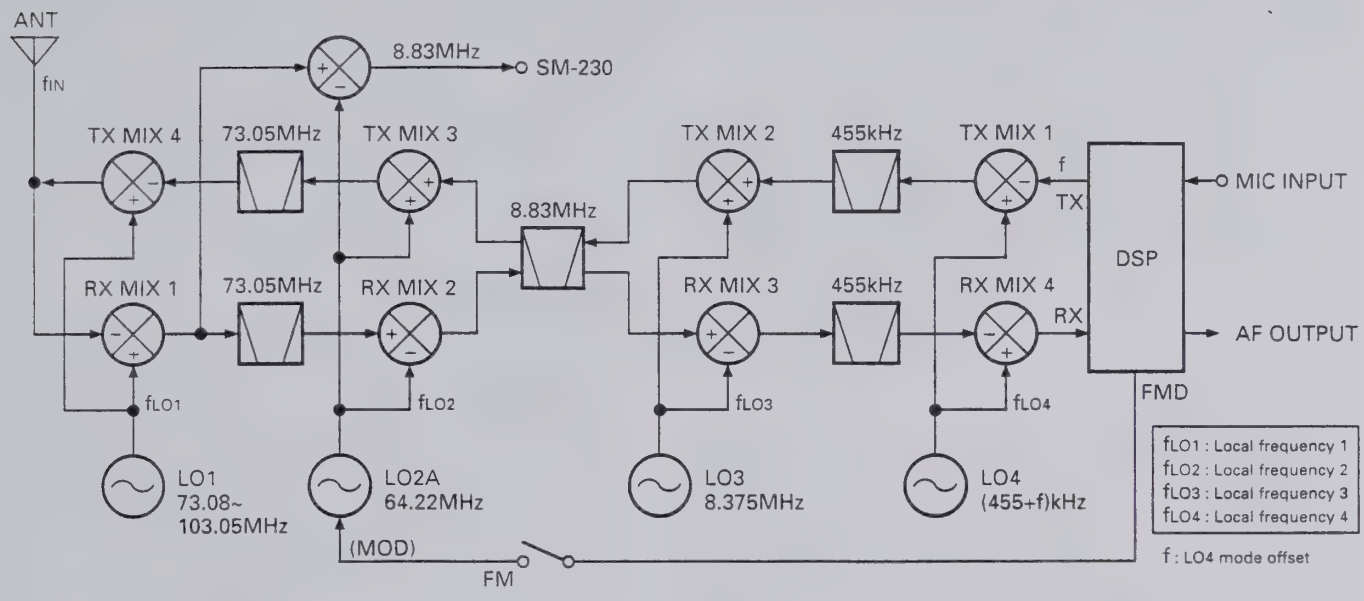

Fig. 1 Frequency configutation

■ Frequency configuration

When the receiver frequency by fIN from the antenna in SSB mode is zero beat (namely, at zero to the SSB signal with a carrier point of fIN), the relationship between these signals is expressed by the following equation.

$$f_{IN} = f_{LO1} - f_{LO2} - f_{LO3} - f_{LO4} + f \quad \ldots . (1)$$

Since all these frequencies are generated by the PLL or DDS circuits as shown in the PLL block diagram in Figure 2, the receiver frequency is determined only by the reference frequency fSTD, the PLL dividing ratio and DDS data. Therefore, the reference frequency accuracy equals the operating frequency accuracy.

The accuracy of the reference oscillator used in the TS-870S is 10ppm (–10 to +50°C). If the temperature-compensated crystal oscillator (TCXO) SO-2 is used, the accuracy becomes 0.5ppm (–10 to +50°C).

The TS-870S local oscillator and CAR DDS are independent of each other. However, they can be operated like a cancel loop configuration by changing the CAR and local oscillator PLL data simultaneously via a microprocessor. This function allows a shift (fLO1, fLO3, fLO4) by the mode change to be performed and the band width of the slope tune to be varied (fLO1, fLO3, fLO4).

When used as a transmitter in SSB mode or in other modes, likewise the frequency is determined by the reference frequency fSTD and dividing ratio. The display frequencies in the modes are listed in Table 1. In the FSK mode, the TS-870S displays the mark transmitter frequency.

In CW mode, the TS-870S receiving pitch can be changed to the required frequency in 50Hz steps with the desired signal remaining in the center of the IF filter band-pass (Variable CW pitch system). Since the receiving pitch varies along with the transmitter side tone, it is possible to zero-beat by receiving the desired signal at the same pitch as the side tone.

FM transmission is obtained in this system by modulating the f_{LO2} via application of the audio signal from the microphone to the VCO2.

Mode	Display frequency
USB, LSB	Carrier point frequency
CW	Transmission carrier frequency
FSK	Mark transmitter frequency
AM, FM	IF filter center frequency

Table 1 Display frequency in each mode

PLL Circuit

The TS-870S PLL circuit consists of a PLL loop that includes DDS covering a frequency range between 30kHz to 30MHz in 10Hz or 1Hz steps in accordance with the 20kHz reference frequency; DDS that generates other local oscillators (LO3, LO4); and a PLL loop that produces LO2A.

The dividing ratio data to each PLL loop and the DDS data are controlled by a microprocessor. Each loop is controlled by a single crystal frequency control system according to the reference frequency f_{STD}. (See the PLL block diagram in Figure 2.)

■ Reference signal generation circuit

The reference frequency f_{STD} used for frequency control is determined by the 20MHz crystal oscillator (X800 and Q800 : 2SC2714). One reference frequency is output as the reference signal f_{REF} for the PLL and DDS in the PLL section. The other is sent to the TX-RX unit and used as the PLL reference signal for the PLL and DSP.

The crystal oscillator may be replaced by an optional TCXO (SO-2), and the TCXO may be switched to with slide switch S800.

If the optional TCXO (SO-2) is installed, the S800 switch must be set to the SO-2 position.

■ LO2 (PLL section)

Q1 : 2SK508NV in VCO2 (A501 : X58-3390-03) generates 64.22MHz. The 20MHz reference frequency f_{REF} is applied to pin 15 of IC509 : MB86001PF, and is divided internally by a factor of 1000 (4000 in FM mode) to produce a 20kHz (5kHz in FM mode) comparison frequency.

The VCO2 output is applied to pin 6 of IC509 : MB86001PF, and is internally divided by a factor of 3211 (12844 in FM mode). It is compared with the 20kHz (5kHz in FM mode) signal using the phase comparator. The VCO2 frequency is locked. The division ratio is transmitted from the control unit.

The output from PLL2 is passed through buffer Q539, amplified by amplifier Q532, passed through a low-pass filter, its impedance is converted, and is then output to the RF section as LO2A.

■ LO1 (PLL loop)

Four VCOs and uses Q520 to Q523 : 2SK508NV x 4 to generate 73.08MHz to 103.05MHz. The 20MHz reference frequency f_{REF} is applied to pin 15 of PLL IC IC507 : MB86001PF, and is internally divided by a factor of 20 to produce a 1MHz comparison frequency. The output is passed through amplifier Q524, and a band-pass filter. One output is passed through buffer Q526 : 2SC2996 and a low-pass filter and goes to the RF section.

The other output signal is passed through buffer Q525 : 2SC2714 and applied to pin 5 of mixer IC508 : SN76514. A signal of 54.54 to 55.54MHz is input to pin 11 of IC508 and converted to a signal of 18.0 to 48.0MHz. This signal is output from pin 13. The signal is passed through a high-pass filter, a low-pass filter, and amplifier Q531 : 2SC2714 and Q530 : 2SC2712, and goes to pin 6 of PLL IC IC507 : MB86001PF.

This signal is internally divided by N, and compared with the 1MHz signal using the phase comparator. The mixer output frequency is locked in 1MHz steps. The division ratio N is transmitted from the control unit as data (N : 18 to 48) corresponding to 0MHz to 30MHz in 1MHz steps. One of the four VCOs is selected according to the VCO change signal (VB0 to VB3) sent from the control unit.

CIRCUIT DESCRIPTION

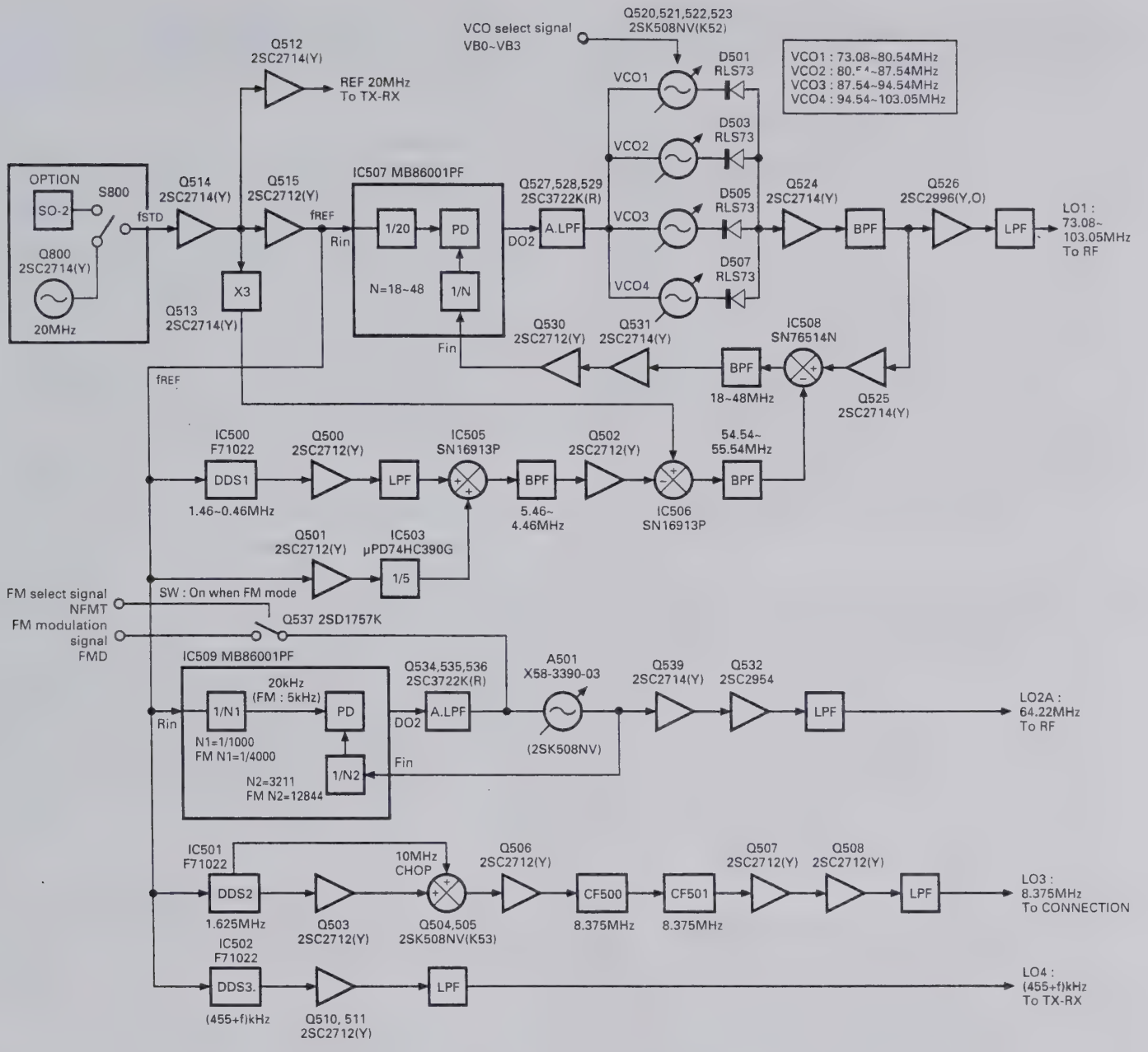

Fig. 2 PLL block diagram

CIRCUIT DESCRIPTION

DDS1 (IC500 : F71022) generates 1.46 to 0.46MHz digital signals. They are converted to analog signals by a digital to analog converter (consisting of CP500, CP501, and Q500), passed through a low-pass filter, and fed to pin 5 of mixer IC505 : SN16913P. The 4MHz signal produced by division of 20MHz reference frequency fREF by divider IC503 : UPD74HC390G by a factor of 5 is input to pin 2 of the mixer IC505, and a 5.46 to 4.46MHz signal is output from pin 1. The output signal is passed through a band-pass filter and buffer Q502, and input to pin 5 of mixer IC506 : SN16913P. The 60MHz signal obtained by tripling 20MHz reference frequency fREF via multiplying circuit Q515 is mixed, and a 54.54 to 55.54MHz signal is output. This signal is passed through a band-pass filter, and goes to pin 13 of mixer IC508.

DDS1 sweeps the 1.46 to 0.46MHz digital signal output in 10 or 1Hz steps, and LO1 covers the 73.08 to 103.05MHz signal in 10 or 1Hz steps and is output to the RF section.

■ LO3 generation

DDS2 (IC501 : F71022) generates a digital signal of the 1.625MHz basic frequency. It is converted to an analog signal by a digital-to-analog converter (consisting of CP502, CP503, and Q503), and chopped by a circuit consisting of Q503 to Q505 so as to extract an 8.375MHz primary harmonic component. Unwanted components are removed by a ceramic filter consisting of CF500 and CF501. The resulting signal is passed through amplifier Q507, buffer Q508, and a low-pass filter, and output to the connection section (final unit) as the LO3 signal.

■ LO4 generation

DDS3 (IC502 : F71022) generates a (455+f) kHz digital signal. It is converted to an analog signal by a digital to analog converter (consisting of CP504, CP505, and Q510), passed through buffer Q511 and a low-pass filter, and output to the TX-RX unit as the LO4 signal.

The LO4 signal is a local oscillator signal used to generate a DSP processing signal f from 455kHz. The f frequency is described in the local signal section (page 14).

■ Subtone generation

During FM transmission, the DSP generates a signal to which a subtone is added and is then sent to the main unit as it is.

■ PLL data

The TS-870S has three PLLs to which the main CPU sends PLL data based on the displayed frequency.

- PLL comprising a VFO (PLL section)
- Local oscillator PLL for frequency conversion (PLL section)
- PLL that generates timing clocks for digital signal processing (TX-RX unit)

The VCOs change with the following conditions.

- Main encoder change → VCO1 (PLL section)
- Mode change → VCO2 (PLL section)

Each PLL IC outputs an unlock signal. If any PLL is unlocked, the main display indicates ". . . . . ." (dots). If the unlocked PLL is the TX-RX unit, the sub-display shows "Err-FD", and if it is the PLL unit, it shows "Err-FE" to indicate that it is unlocked.

The unlocking of each PLL is output to pin 11 (UL) of PLL IC : MB86001PF as unlock data (UNLOCK : LOW).

Loop	VCO No.	IC No.	Comparison frequency/divide ratio	Variable divide ratio	Frequency (MHz)
LO1	VCO1	IC507	1MHz/20	18~48	73.08~103.05
LO2	VCO2	IC509	20kHz/1000 5kHz/4000 : FM	3211 12844 : FM	64.22

CIRCUIT DESCRIPTION

■ DDS circuit configuration

The DDS IC has been developed with standard cells to implement a high-speed operation circuit and large-capacity ROM at a low cost.

1) IC configuration

The IC consists of the following components:

Two 28 bit registers for setting frequency data, one 28 bit frequency shift register for addition to the frequency register, a 23 bit parallel signal input section for frequency modulation with a parallel signal, and a data entry and selection section.

Frequency modulation section comprised of a 28 bit adder that adds frequency data and frequency modulation data

Phase data operation section that adds data from the frequency modulation section with the 28 bit phase data register

SIN-ROM that converts phase data to sine data.

2) Frequency/shift data setting

Using serial signals synchronized with clock pulses, a total of 30 bits (2 bits that specify the destination to which data are set and 28 bits for frequency data) are set in three internal registers.

3) Frequency register selection

The data set in the two frequency registers are selected by the SLAB input of the DDS IC. This pin handles the TXC signal. This function eliminates the need for the TS-870S microprocessor to set frequency data for each transmission and reception.

4) Frequency data selection

The SPSL input of the DDS IC selects whether to use the data in the internal frequency shift register or the data from parallel input as frequency modulation data.

5) Frequency modulation

The MDEN input of the DDS IC enables or disables frequency modulation. When frequency modulation is enabled, frequency data is added, and the result is input to the phase data operation section.

6) Phase data operation

The target frequency phase data is output by accumulating 28 bit frequency data in the 28 bit phase accumulator.

$Fout = Fs/2^{28} \cdot Dsum$

Fs : DDS IC input frequency/2

Dsum : Frequency data+Frequency modulation data

If 2^{25} is set for Dsum when 1/8 Fs is output, the phase data must be increased by $\pi/8$.

A 28 bit absolute value operation has been used here, but a 28 bit signed operation can also be used, assuming that the MSB is a sign. If complement data of 8000000 to FFFFFFFF (hex) is set, the phase moves in the negative direction for the positive data.

7) SIN-ROM

Phase data from the phase data operation section is converted to sine data of 0000 to FFFF (hex) in the 16 bit offset binary format.

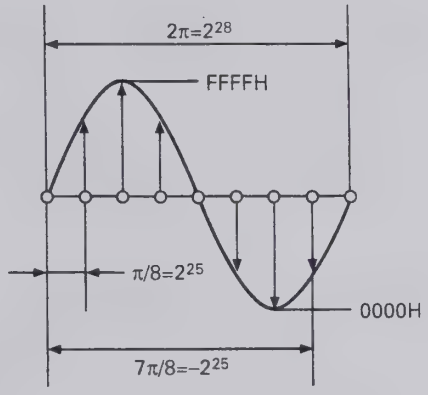

CIRCUIT DESCRIPTION

Receiver Circuit

The basic configuration of the receiver circuit is quadruple conversion. After the frequency is converted to the 11.3kHz fourth IF, the DSP carries out AGC, filtering, detection, and signal processing. Figure 3 is a receiver block diagram.

The signal coming from the antenna connector is passed through the antenna switching relay (K301) in the final unit (E/5 relay section), the antenna tuner unit, and the transmit/receive changeover relay (K302) within the relay section, and then goes to the CN2 (RAT) of the RF unit (A/9 RF section).

The signal input to the RF unit is passed through protection lamp PL1 for strong signal input, external receiver power distribution circuit L1 and L2 and switching circuit K1, and is input to the ATT (–6dB, –12dB) circuit. This distribution circuit is switched when the EXT RX (function that distributes the signals from the antenna to the external receiver), which is set from menu No.53, is turned ON. When this function is ON, the signal from the antenna is attenuated by about 4dB and output to the receiver section in the subsequent stage and the EXT RX terminal on the rear. The signal to the EXT RX terminal is passed through lamp PL2 for protection during transmission. The lamp turns OFF when about 10W is input.

The signal is passed through the ATT switching circuit, then goes to the BC band attenuation circuit (L7 to L9, C19 to C22). The BC band signal is attenuated by 5 to 10dB to prevent power saturation of the band-pass filter switching diode resulting from interference from a proximate station. The band-pass filter consists of two low-pass filters and 10 band-pass filters, and passes signals during transmission. The pin diode (1SV128) is used to change the input to raise the signal saturation level when a HIGH signal is input.

The RF amplifier circuit functions as a low-gain amplifier using Q14 and Q15 : 2SK2218(5) x 2 when the frequency is 21.49MHz or lower, and it functions as a high-gain amplifier using Q13 : 3SK131(M) when the frequency is higher than 21.49MHz. It is bypassed when AIP is ON.

The 73.05MHz first IF signal is generated by quad mixer Q17 to Q20 : 2SK520(K44) x 4. It is passed through XF1 73.05MHz MCF, Q24 : 3SK131(M) first mixer amplifier, and Q26 and Q27 : 2SK520(K43) mixer to produce a 8.83MHz second IF signal. The second IF signal is divided into two signals, one of which is branched to the noise blanker, amplified by amplifier Q28, and then goes to the NB circuit. The other signal is input to the second IF signal amplifier, and serves as a blanking gate by the NB and RBK signals. The amplified second IF signal is passed through the 8.83MHz IF filter, and output to the final unit (C/5 connection section) from CN10. This signal is switched with the diode switch D62 and D68, and functions as a second IF signal output during reception and a third IF signal input during transmission.

The second IF signal input to CN412 in the final unit (C/5 connection section) is routed to the receiver circuit by D450, and input to the mixer Q460 and Q461 to generate a 455kHz third IF signal. It is passed through the 455kHz IF filter, amplified by third IF amplifier Q475, and output by CN411 to the TX-RX unit as RIF signal. The total gain of the receiver unit is adjusted by VR1 in the TX-RX unit.

CIRCUIT DESCRIPTION

■ IF filter

The IF filter consists of a DSP digital filter. If there is a HIGH signal outside the DSP filter band, the analog to digital converter input level may be saturated, and the filter does not work properly. Thus, an analog filter is inserted between the second IF (8.83MHz) and the third IF (455kHz) so that it does not impair the DSP filter properties. To operate each filter properly, there are three kinds of filters for each IF signal and also slope tuning is carried out.

1) Filters characteristics

Item	Rating
Nominal center frequency	73.05MHz
Pass bandwidth	±7.5kHz or more at 3dB
Attenuation bandwidth	±30kHz or less at 40dB
Ripple	1.0dB or less
Insertion loss	3.0dB or less
Guaranteed attenuation	70dB or more at fo + (500 to 1000kHz) 70dB or more at fo – (200 to 1000kHz)
Center frequency deviation	Within ±1.5kHz at 3dB
Terminating impedance	2kΩ ± 10%

MCF (L71-0401-05) : RF unit XF1

Item	Rating
Nominal center frequency	8830kHz
Center frequency deviation	Within ±150Hz at 6dB
Pass bandwidth	±1.5kHz or more at 6dB
Attenuation bandwidth	±1.9kHz or less at 20dB ±2.75kHz or less at 60dB ±3.5kHz or less at 80dB
Ripple	2dB or less
Insertion loss	6dB or less
Guaranteed attenuation	80dB or more in the range ±3.5kHz to ±1MHz
Terminating impedance	600Ω / 15pF

MCF (L71-0235-05) : RF unit XF2

Item	Rating
Nominal center frequency	8830kHz
Pass bandwidth	±3.0kHz or more at 6dB
Attenuation bandwidth	±16 0kHz or less at 60dB ±13.0kHz or less at 50dB
Guaranteed attenuation	70dB or more with in fo ± 1MHz (Without spurious in the range fo to fo+500kHz)
Ripple	Within 1.0dB
Insertion loss	Within 1.5dB
Terminating impedance	1850kΩ / 2pF

MCF (L71-0266-05) : RF unit XF3

Item	Rating
Nominal center frequency	8.400MHz
3dB attenuation bandwidth	Within 180 ± 40kHz
20dB attenuation bandwidth	400kHz or less
Insertion loss	9.0dB or less Formula : 20 x log [E1÷ (2 x E2)]
Ripple	1.0dB or less (within 3dB band)
Spurious attenuation	25dB or more (6.0 to 10.0MHz)
Voltage capacity	50V DC (1 minute)
Insulating resistance	100MΩ or more (100V DC)
Input and output impedance	330Ω

Ceramic filter (L72-0343-05) : RF unit CF500, 501

Item	Rating
Nominal center frequency	455kHz
6dB bandwidth	±3kHz (455kHz)
50dB bandwidth	±9kHz (455kHz)
Ripple	2dB or less (within 455+2kHz)
Insertion loss	6dB or less
Guaranteed attenuation	60dB or more (within 455±100kHz)
Input and output impedance	2.0kΩ

Ceramic filter (L72-0319-05) : Final unit CF451

Item	Rating
Center frequency	455±0.20kHz
6dB bandwidth	2.9 to 3.2kHz
60dB bandwidth	4.7kHz or less
Guaranteed attenuation	60dB or more at 0.1 to 1MHz
Spurious	40dB or more at 600 to 700kHz
6dB band ripple	2dB or less
Insertion loss	6dB or less
Input and output impedance	2kΩ

Ceramic filter (L72-0333-05) : Final unit CF452

Item	Rating
Nominal center frequency	455kHz
6dB bandwidth	±7.5kHz or more (455kHz)
50dB bandwidth	±15kHz or less (455kHz)
Ripple	3dB or less (within 455+5kHz)
Insertion loss	6dB or less
Guaranteed attenuation	35dB or more (within 455±100kHz)
Input and output impedance	1.5kΩ

Ceramic filter (L72-0366-05) : Final unit CF453

CIRCUIT DESCRIPTION

Receiver Circuit

The basic configuration of the receiver circuit is quadruple conversion. After the frequency is converted to the 11.3kHz fourth IF, the DSP carries out AGC, filtering, detection, and signal processing. Figure 3 is a receiver block diagram.

The signal coming from the antenna connector is passed through the antenna switching relay (K301) in the final unit (E/5 relay section), the antenna tuner unit, and the transmit/receive changeover relay (K302) within the relay section, and then goes to the CN2 (RAT) of the RF unit (A/9 RF section).

The signal input to the RF unit is passed through protection lamp PL1 for strong signal input, external receiver power distribution circuit L1 and L2 and switching circuit K1, and is input to the ATT (–6dB, –12dB) circuit. This distribution circuit is switched when the EXT RX (function that distributes the signals from the antenna to the external receiver), which is set from menu No.53, is turned ON. When this function is ON, the signal from the antenna is attenuated by about 4dB and output to the receiver section in the subsequent stage and the EXT RX terminal on the rear. The signal to the EXT RX terminal is passed through lamp PL2 for protection during transmission. The lamp turns OFF when about 10W is input.

The signal is passed through the ATT switching circuit, then goes to the BC band attenuation circuit (L7 to L9, C19 to C22). The BC band signal is attenuated by 5 to 10dB to prevent power saturation of the band-pass filter switching diode resulting from interference from a proximate station. The band-pass filter consists of two low-pass filters and 10 band-pass filters, and passes signals during transmission. The pin diode (1SV128) is used to change the input to raise the signal saturation level when a HIGH signal is input.

The RF amplifier circuit functions as a low-gain amplifier using Q14 and Q15 : 2SK2218(5) x 2 when the frequency is 21.49MHz or lower, and it functions as a high-gain amplifier using Q13 : 3SK131(M) when the frequency is higher than 21.49MHz. It is bypassed when AIP is ON.

The 73.05MHz first IF signal is generated by quad mixer Q17 to Q20 : 2SK520(K44) x 4. It is passed through XF1 73.05MHz MCF, Q24 : 3SK131(M) first mixer amplifier, and Q26 and Q27 : 2SK520(K43) mixer to produce a 8.83MHz second IF signal. The second IF signal is divided into two signals, one of which is branched to the noise blanker, amplified by amplifier Q28, and then goes to the NB circuit. The other signal is input to the second IF signal amplifier, and serves as a blanking gate by the NB and RBK signals. The amplified second IF signal is passed through the 8.83MHz IF filter, and output to the final unit (C/5 connection section) from CN10. This signal is switched with the diode switch D62 and D68, and functions as a second IF signal output during reception and a third IF signal input during transmission.

The second IF signal input to CN412 in the final unit (C/5 connection section) is routed to the receiver circuit by D450, and input to the mixer Q460 and Q461 to generate a 455kHz third IF signal. It is passed through the 455kHz IF filter, amplified by third IF amplifier Q475, and output by CN411 to the TX-RX unit as RIF signal. The total gain of the receiver unit is adjusted by VR1 in the TX-RX unit.

CIRCUIT DESCRIPTION

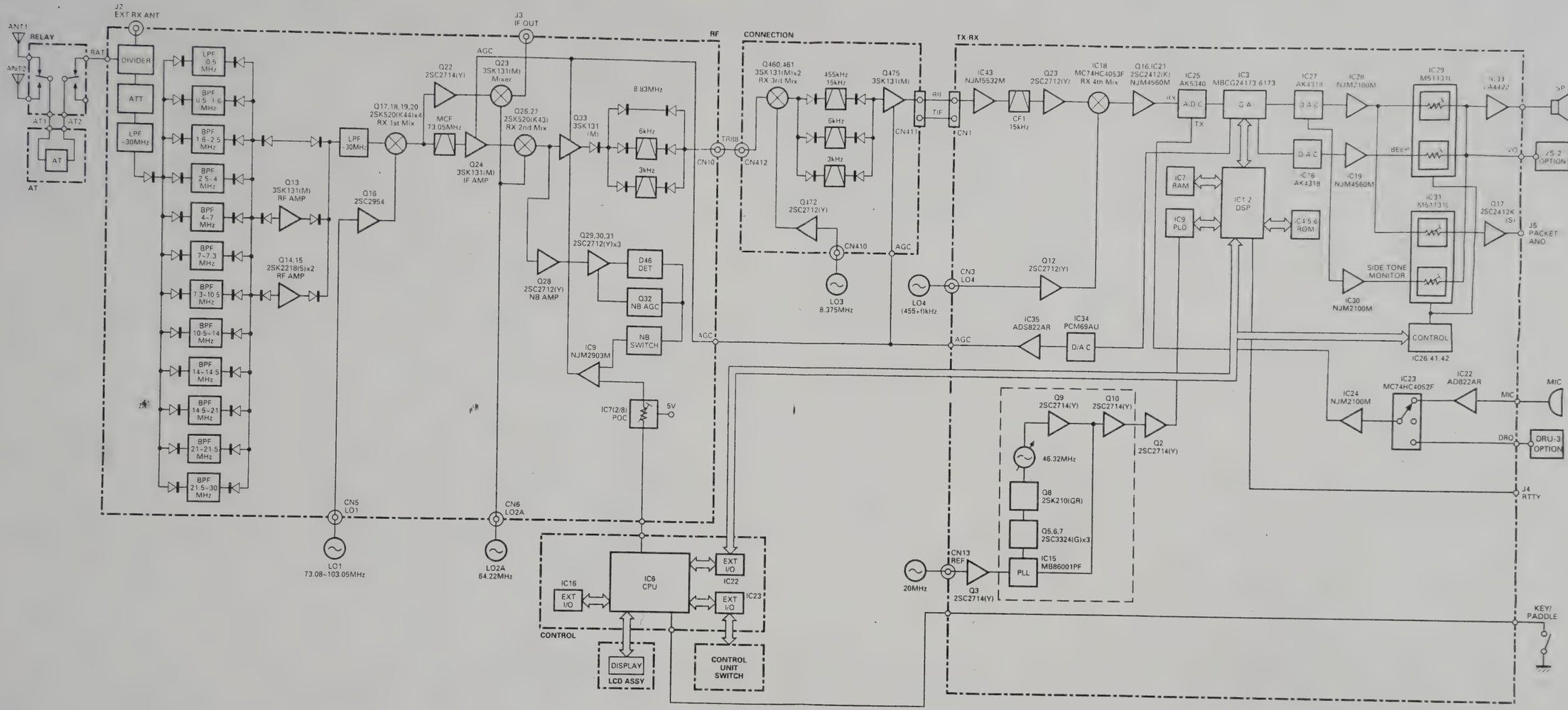

Fig. 3 Receiver block diagram

CIRCUIT DESCRIPTION

■ IF gain correction

The total gain changes when the AIP is turned ON or OFF or the band is 21.49MHz or higher. To limit the changes, the DSP corrects the IF gain. Table 2 lists the corrections. When the "AIP S-meter correction" on menu No.11 is turned ON, the S-meter is corrected when the AIP is turned ON. And since the IF gain is corrected greatly, the receiver internal noise output becomes large.

Frequency	Correction (dB)			Pre-amp gain (dB) reference
	AIP			
	OFF	ON1 (Menu 11 OFF)	ON2 (Menu 11 ON) SSB, CW, FSK only	
30kHz~ 21.49MHz	−2	0	+12	15
21.49MHz~ 30.MHz	−7	0	+12	21

Table 2 IF gain corrections

■ NB circuit

The noise blanker, like the conventional one, branches the signal before the narrow-band filter of the 8.83MHz second IF, and detects noise, and performs blanking using the second IF amplifier as a gate. The signal is amplified by Q28, detected by the AGC amplification and noise detection circuit consisting of Q29 to Q32 and D46, and then a blanking pulse is generated by the IC9 comparator. The noise detection circuit Q29 to Q32 and D46 is separated into segments by a jumper in the unit to prevent sneak path.

■ Slope tune

The operating principle of SSB-SLOPE-TUNE is explained first. When f_{LO1}, f_{LO3}, and f_{LO4} in Figure 4 are at their normal frequencies, the synthesized bandwidth is indicated by A. If the f_{LO1} frequency is increased by $\Delta f1$ and the f_{LO3} frequency is decreased by $\Delta f1$, the filter of the 8.83MHz band shifts to position B. The synthesized bandwidth is indicated by the section overlapped by A and B. When the frequencies of f_{LO1} and f_{LO3} are lowered by $\Delta f2$, only the 455kHz second IF filter shifts to position C. The synthesized bandwidth is indicated by the section overlapped by B and C.

Therefore, high frequencies are cut off by increasing the f_{LO1} frequency and decreasing the f_{LO3} frequency. Low frequencies are cut off by decreasing the f_{LO3} and f_{LO4} frequencies. The TS-870S enables these operations using the DSP filter.

In SSB mode, slope tune high cut/low cut is switched by using the filter select control : in CW mode, the WIDTH (bandwidth)/SHIFT (center frequency) is changed, and in FSK mode, the WIDTH (bandwidth) is changed. The microcomputer in the control unit sends filter select data to the DSP, and slope tuning is carried out by changing frequency data given to the PLL and DDS. The second IF (8.83MHz) and third IF (455kHz) filters are selected to carry out slope tuning effectively. Tables 3 and 4 list filter selections, slope tuning and analog filter high cut/low cut amounts. Slope tuning low cut/high cut can be switched in AM mode, and the WIDTH can be switched in FM mode by using DSP filters only, and the analog filter is fixed to 15kHz.

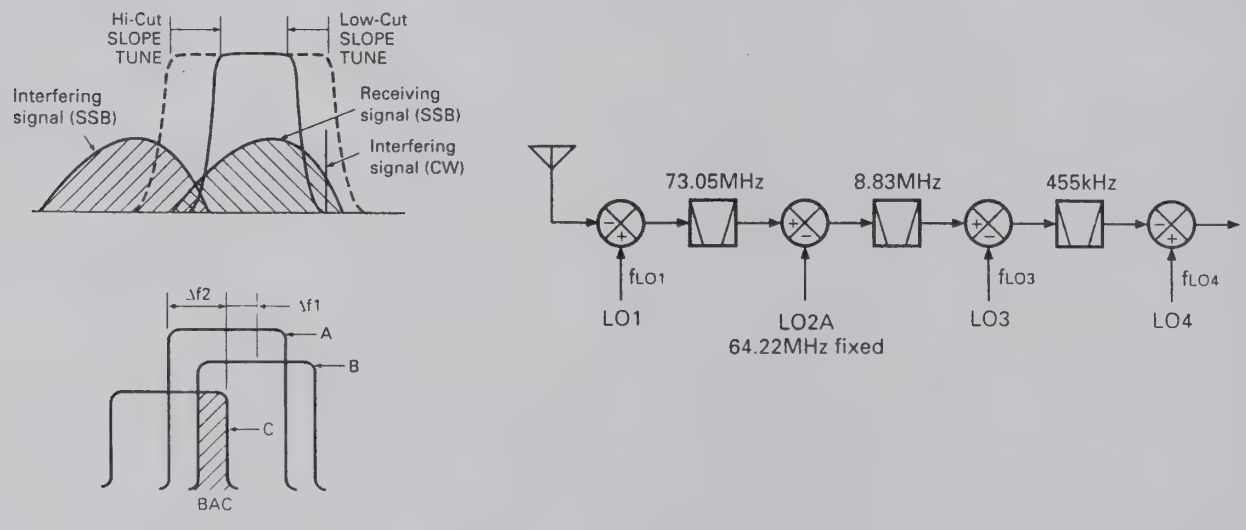

Fig. 4 SSB slope tune operating principle

CIRCUIT DESCRIPTION

	1.4k	1.6k	1.8k	2.0k	2.2k	2.4k	2.6k	2.8k	3.0k	3.4k	4.6k	6.0k
0 (Hz)	1.0k	0.8k	0.6k	0.4k	0.2k	0.0k	1.4k	1.2k	1.0k	0.6k	0.0k	0.0k
50	↑	↑	↑	↑	↑	↑	↑	↑	↑	↑	↑	↑
100	↑	↑	↑	↑	↑	↑	↑	↑	↑	↑	↑	↑
200	↑	↑	↑	↑	↑	↑	–0.2k	↑	↑	↑	↑	↑
300	↑	↑	↑	↑	↑	↑	↑	↑	↑	↑	↑	↑
400	↑	↑	↑	↑	↑	↑	↑	–0.4k	↑	↑	↑	↑
500	↑	↑	↑	↑	↑	↑	↑	↑	↑	↑	↑	↑
600	↑	↑	↑	↑	↑	↑	↑	↑	–0.6k	↑	↑	↑
800	↑	↑	↑	↑	↑	↑	↑	↑	↑	↑	–0.6k	↑
1000	↑	↑	↑	↑	↑	↑	↑	↑	↑	–1.0k	↑	↑

← High cut position

Filter selection
- 3kHz filter
- 6kHz filter
- 15kHz filter
- Default

↑
Low cut posotion
(455kHz filter) Low cut amount

(8.83MHz filter) High cut amount

Table 3 SSB slop tuning and analog filter high/low cut (Hz)

	400	450	500	550	600	650	700	750	800	850	900	950	1000
50 (Hz)	375	425	475	525	575	625	675	725	775	825	875	925	975
100	350	400	450	500	550	600	650	700	750	800	850	900	950
200	300	350	400	450	500	550	600	650	700	750	800	850	900
400	200	250	300	350	400	450	500	550	600	650	700	750	800
600	100	150	200	250	300	350	400	450	500	550	600	650	700
1000	–100	–50	0	50	100	150	200	250	300	350	400	450	500

← Filter center position

Default

↑
Filter width

Table 4-1 CW WIDTH/SHIFT low cut amount (Hz)

	400	450	500	550	600	650	700	750	800	850	900	950	1000
50 (Hz)	1975	1925	1875	1825	1775	1725	1675	1625	1575	1525	1475	1425	1375
100	1950	1900	1850	1800	1750	1700	1650	1600	1550	1500	1450	1400	1350
200	1900	1850	1800	1750	1700	1650	1600	1550	1500	1450	1400	1350	1300
400	1800	1750	1700	1650	1600	1550	1500	1450	1400	1350	1300	1250	1200
600	1700	1650	1600	1550	1500	1450	1400	1350	1300	1250	1200	1150	1100
1000	1500	1450	1400	1350	1300	1250	1200	1150	1100	1050	1000	950	900

← Filter center position

Default

↑
Filter width

Table 4-2 CW WIDTH/SHIFT high cut amount (Hz)

■ IF filter

The IF filter consists of a DSP digital filter. If there is a HIGH signal outside the DSP filter band, the analog to digital converter input level may be saturated, and the filter does not work properly. Thus, an analog filter is inserted between the second IF (8.83MHz) and the third IF (455kHz) so that it does not impair the DSP filter properties. To operate each filter properly, there are three kinds of filters for each IF signal and also slope tuning is carried out.

1) Filters characteristics

Item	Rating
Nominal center frequency	73.05MHz
Pass bandwidth	±7.5kHz or more at 3dB
Attenuation bandwidth	±30kHz or less at 40dB
Ripple	1.0dB or less
Insertion loss	3.0dB or less
Guaranteed attenuation	70dB or more at fo + (500 to 1000kHz) 70dB or more at fo – (200 to 1000kHz)
Center frequency deviation	Within ±1.5kHz at 3dB
Terminating impedance	2kΩ ± 10%

MCF (L71-0401-05) : RF unit XF1

Item	Rating
Nominal center frequency	8830kHz
Center frequency deviation	Within ±150Hz at 6dB
Pass bandwidth	±1.5kHz or more at 6dB
Attenuation bandwidth	±1.9kHz or less at 20dB ±2.75kHz or less at 60dB ±3.5kHz or less at 80dB
Ripple	2dB or less
Insertion loss	6dB or less
Guaranteed attenuation	80dB or more in the range ±3.5kHz to ±1MHz
Terminating impedance	600Ω / 15pF

MCF (L71-0235-05) : RF unit XF2

Item	Rating
Nominal center frequency	8830kHz
Pass bandwidth	±3.0kHz or more at 6dB
Attenuation bandwidth	±16.0kHz or less at 60dB ±13.0kHz or less at 50dB
Guaranteed attenuation	70dB or more with in fo ± 1MHz (Without sourious in the range fo to fo+500kHz)
Ripple	Within 1.0dB
Insertion loss	Within 1.5dB
Terminating impedance	1850kΩ / 2pF

MCF (L71-0266-05) : RF unit XF3

Item	Rating
Nominal center frequency	8.400MHz
3dB attenuation bandwidth	Within 180 ± 40kHz
20dB attenuation bandwidth	400kHz or less
Insertion loss	9.0dB or less Formula : 20 x log [E1÷ (2 x E2)]
Ripple	1.0dB or less (within 3dB band)
Spurious attenuation	25dB or more (6.0 to 10.0MHz)
Voltage capacity	50V DC (1 minute)
Insulating resistance	100MΩ or more (100V DC)
Input and output impedance	330Ω

Ceramic filter (L72-0343-05) : RF unit CF500, 501

Item	Rating
Nominal center frequency	455kHz
6dB bandwidth	±3kHz (455kHz)
50dB bandwidth	±9kHz (455kHz)
Ripple	2dB or less (within 455+2kHz)
Insertion loss	6dB or less
Guaranteed attenuation	60dB or more (within 455±100kHz)
Input and output impedance	2.0kΩ

Ceramic filter (L72-0319-05) : Final unit CF451

Item	Rating
Center frequency	455±0.20kHz
6dB bandwidth	2.9 to 3.2kHz
60dB bandwidth	4.7kHz or less
Guaranteed attenuation	60dB or more at 0.1 to 1MHz
Spurious	40dB or more at 600 to 700kHz
6dB band ripple	2dB or less
Insertion loss	6dB or less
Input and output impedance	2kΩ

Ceramic filter (L72-0333-05) : Final unit CF452

Item	Rating
Nominal center frequency	455kHz
6dB bandwidth	±7.5kHz or more (455kHz)
50dB bandwidth	±15kHz or less (455kHz)
Ripple	3dB or less (within 455+5kHz)
Insertion loss	6dB or less
Guaranteed attenuation	35dB or more (within 455±100kHz)
Input and output impedance	1.5kΩ

Ceramic filter (L72-0366-05) : Final unit CF453

■ IF gain correction

The total gain changes when the AIP is turned ON or OFF or the band is 21.49MHz or higher. To limit the changes, the DSP corrects the IF gain. Table 2 lists the corrections. When the "AIP S-meter correction" on menu No.11 is turned ON, the S-meter is corrected when the AIP is turned ON. And since the IF gain is corrected greatly, the receiver internal noise output becomes large.

Frequency	Correction (dB)			Pre-amp gain (dB) reference
	AIP			
	OFF	ON1 (Menu 11 OFF)	ON2 (Menu 11 ON) SSB, CW, FSK only	
30kHz~ 21.49MHz	–2	0	+12	15
21.49MHz~ 30.MHz	–7	0	+12	21

Table 2 IF gain corrections

■ NB circuit

The noise blanker, like the conventional one, branches the signal before the narrow-band filter of the 8.83MHz second IF, and detects noise, and performs blanking using the second IF amplifier as a gate. The signal is amplified by Q28, detected by the AGC amplification and noise detection circuit consisting of Q29 to Q32 and D46, and then a blanking pulse is generated by the IC9 comparator. The noise detection circuit Q29 to Q32 and D46 is separated into segments by a jumper in the unit to prevent sneak path.

■ Slope tune

The operating principle of SSB-SLOPE-TUNE is explained first. When f_{LO1}, f_{LO3}, and f_{LO4} in Figure 4 are at their normal frequencies, the synthesized bandwidth is indicated by A. If the f_{LO1} frequency is increased by $\Delta f1$ and the f_{LO3} frequency is decreased by $\Delta f1$, the filter of the 8.83MHz band shifts to position B. The synthesized bandwidth is indicated by the section overlapped by A and B. When the frequencies of f_{LO1} and f_{LO3} are lowered by $\Delta f2$, only the 455kHz second IF filter shifts to position C. The synthesized bandwidth is indicated by the section overlapped by B and C.

Therefore, high frequencies are cut off by increasing the f_{LO1} frequency and decreasing the f_{LO3} frequency. Low frequencies are cut off by decreasing the f_{LO3} and f_{LO4} frequencies. The TS-870S enables these operations using the DSP filter.

In SSB mode, slope tune high cut/low cut is switched by using the filter select control : in CW mode, the WIDTH (bandwidth)/SHIFT (center frequency) is changed, and in FSK mode, the WIDTH (bandwidth) is changed. The microcomputer in the control unit sends filter select data to the DSP, and slope tuning is carried out by changing frequency data given to the PLL and DDS. The second IF (8.83MHz) and third IF (455kHz) filters are selected to carry out slope tuning effectively. Tables 3 and 4 list filter selections, slope tuning and analog filter high cut/low cut amounts. Slope tuning low cut/high cut can be switched in AM mode, and the WIDTH can be switched in FM mode by using DSP filters only, and the analog filter is fixed to 15kHz.

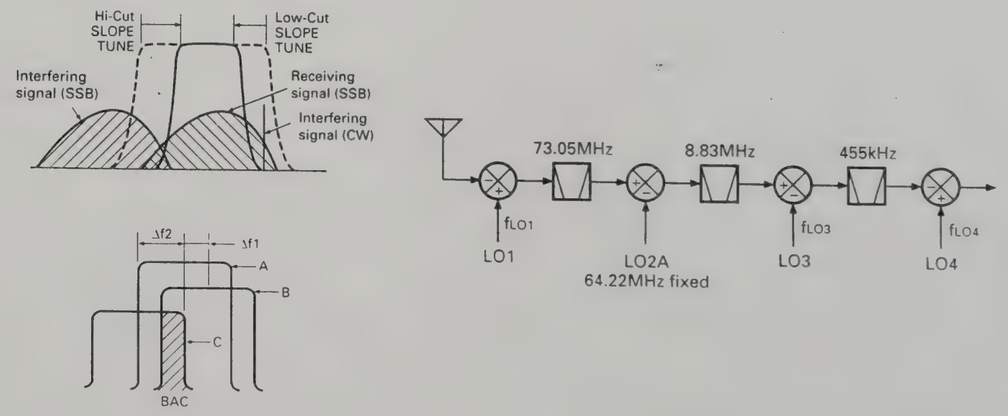

Fig. 4 SSB slope tune operating principle

CIRCUIT DESCRIPTION

	1.4k	1.6k	1.8k	2.0k	2.2k	2.4k	2.6k	2.8k	3.0k	3.4k	4.6k	6.0k
0 (Hz)	1.0k	0.8k	0.6k	0.4k	0.2k	0.0k	1.4k	1.2k	1.0k	0.6k	0.0k	0.0k
50	↑	↑	↑	↑	↑	↑	↑	↑	↑	↑	↑	↑
100	↑	↑	↑	↑	↑	↑	↑	↑	↑	↑	↑	↑
200	↑	↑	↑	↑	↑	↑	–0.2k	↑	↑	↑	↑	↑
300	↑	↑	↑	↑	↑	↑	↑	↑	↑	↑	↑	↑
400	↑	↑	↑	↑	↑	↑	↑	–0.4k	↑	↑	↑	↑
500	↑	↑	↑	↑	↑	↑	↑	↑	↑	↑	↑	↑
600	↑	↑	↑	↑	↑	↑	↑	↑	–0.6k	↑	↑	↑
800	↑	↑	↑	↑	↑	↑	↑	↑	↑	↑	–0.6k	↑
1000	↑	↑	↑	↑	↑	↑	↑	↑	↑	–1.0k	↑	↑

← High cut position

Filter selection
- 3kHz filter
- 6kHz filter
- 15kHz filter
- Default

↑
Low cut posotion
(455kHz filter) Low cut amount

(8.83MHz filter) High cut amount

Table 3 SSB slop tuning and analog filter high/low cut (Hz)

	400	450	500	550	600	650	700	750	800	850	900	950	1000
50 (Hz)	375	425	475	525	575	625	675	725	775	825	875	925	975
100	350	400	450	500	550	600	650	700	750	800	850	900	950
200	300	350	400	450	500	550	600	650	700	750	800	850	900
400	200	250	300	350	400	450	500	550	600	650	700	750	800
600	100	150	200	250	300	350	400	450	500	550	600	650	700
1000	–100	–50	0	50	100	150	200	250	300	350	400	450	500

← Filter center position

Default

↑
Filter width

Table 4-1 CW WIDTH/SHIFT low cut amount (Hz)

	400	450	500	550	600	650	700	750	800	850	900	950	1000
50 (Hz)	1975	1925	1875	1825	1775	1725	1675	1625	1575	1525	1475	1425	1375
100	1950	1900	1850	1800	1750	1700	1650	1600	1550	1500	1450	1400	1350
200	1900	1850	1800	1750	1700	1650	1600	1550	1500	1450	1400	1350	1300
400	1800	1750	1700	1650	1600	1550	1500	1450	1400	1350	1300	1250	1200
600	1700	1650	1600	1550	1500	1450	1400	1350	1300	1250	1200	1150	1100
1000	1500	1450	1400	1350	1300	1250	1200	1150	1100	1050	1000	950	900

← Filter center position

Default

↑
Filter width

Table 4-2 CW WIDTH/SHIFT high cut amount (Hz)

CIRCUIT DESCRIPTION

■ Local signals (LO1, LO3, LO4)

1) LO1

Table 5 lists LO1 frequency configuration.

DDS1 varies from 0.46 to 1.46MHz, and when the display frequency is multiple MHz (for example, 14.000MHz), 0.96MHz is output. When the display frequency is increased, the DDS1 frequency is reduced by the amount of change. When the DDS1 frequency is reduced to 0.46MHz, the frequency is switched to 1.46MHz, and when it is increased to 1MHz, the frequency returns to 0.96MHz (Figure 5). By changing the 1MHz band in synchronization with the display frequency, the 1MHz comparison PLL circuit is locked and LO1 is generated.

In Table 5, the 0.96MHz base indicates the DDS output when the frequency is multiple MHz. The frequency (UNV) indicates the decimal digits of the MHz frequency. (If the display frequency is 14.2MHz, (UNV) = 0.2MHz.) DDS is switched by 500kHz, so $-0.5\text{MHz} \leq (\text{UNV}) < 0.5\text{MHz}$.

As described in the slope tuning section, slope tuning high-cutting is corrected for LO1, so the correction is added to the DDS output. SSB H in Table 5 indicates the correction. Table 3 shows the actual correction of SSB H. (For example, when the high frequency is 2.2kHz, the correction SSB H is 0.2kHz.)

Since RIT and XIT change the receive and transmit frequencies by the preset amount, it needs to be corrected. They are D RIT and D XIT in Table 5.

The "8.83MHz window-joining" (D 883) in Table 5 is determined during adjustment. For example, the equation for calculating the DDS output frequency for 14.2MHz USB. The high-cut frequency is assumed to be 2.6kHz. (D 833 is zero.)

DDS1 : 0.96M – (UNV) – (OFS SSB) + (SSB H)
= 0.96M – 0.2M – 1.2k – 0.2k
= 758.6kHz
0.96M : Base
UNV : 14.2M – 14.0M = 0.2M
OFS SSB (Filter offset) : 1.2k
SSB H (Slope HI) : –0.2k (See table 3.)

The LO1 output frequency f_{LO1} is calculated from the frequency configuration in Figure 6.

$f_{LO1} = f_{PLL\ IN} + 60\text{MHz} - (4\text{MHz} + f_{DDS1})$
$= 32\text{MHz} + 60\text{MHz} - (4\text{MHz} + 758.6\text{kHz})$
$= 87.2414\text{MHz}$

Where $f_{PLL\ IN}$ is the PLL input frequency and f_{DDS1} is the DDS1 output frequency.

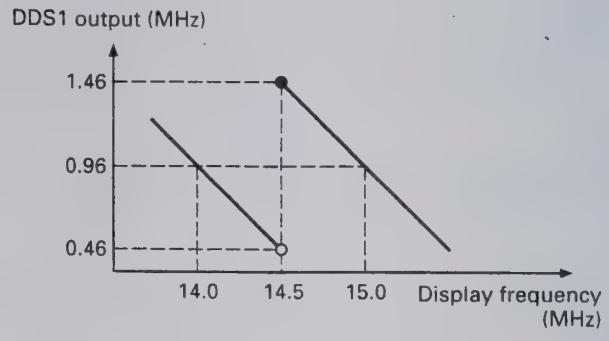

Fig. 5 Relationship between display frequency and DDS output frequency

2) LO3

Table 6 lists the LO3 frequency configuration.

The LO3 frequency is 8.375MHz, and is generated by the chopper circuit. The DDS2 output frequency is 1.625MHz. For LO3, slope tuning low-cut/high-cut is corrected. SSB H and SSB L in Table 6 indicate the corrections. D 833 and D 455 are values determined during filter window-joining and adjustment.

For example, if USB is 14.2MHz, high-cut frequency is 2.6kHz, and low-cut frequency is 300Hz, the LO3 frequency is calculated as follows. It is assumed that D 833 and D 455 are zero.

$f_{LO3} = 1.625\text{MHz} + (\text{SSB H}) + (\text{SSB L})$
$= 1.625\text{MHz} + (-0.2\text{kHz}) + 300\text{Hz}$
$= 1625.1\text{kHz}$

CIRCUIT DESCRIPTION

3) LO4

Table 7 lists the LO4 frequency configuration.

For LO4, correction (OFS SSB) is carried out so that a signal passes through a filter according to the mode, and the slope tune low-cut (SSB L) is corrected. The mode offset is the frequency (11.30859375kHz) used for processing by the DSP, and its sign changes with the mode.

For example, if USB is 14.2MHz and the low-cut frequency is 300Hz, the LO4 output frequency is calculated as follows.

f_{LO4} = 455kHz + (mode offset) + (OFS SSB) + (SSB L)
= 455kHz + 11.30859375kHz + 300Hz
= 467.8085938kHz

The filter is corrected according to each mode by LO1 and LO4, slope tuning high-cut is corrected by LO1 and LO3, and low-cut is corrected by LO3 and LO4.

In other modes, each local frequency is determined by the calculation method as shown previously in Tables 5 to 7.

Component	DDS1 (1HZ)															
	LSB		USB		CW		CW-R		FSK		FSK-R		AM		FM	
	RX	TX	RX	TX	RX	TX	RX	TX	RX	TX	RX	TX	RX	TX	RX	TX
BASE	0.96MHz*6															
Frequency (100kHz or less)	– (UNV)															
Mode offset																
Filter offset*1	+ (OFS SSB)	+2k	– (OFS SSB)	–2k	–800		+800									
CW pitch					+ (PITCH)		– (PITCH)									
FSK tone (H/L)																
FSK shift (polarity)																
RIT	– (D RIT)		– (D RIT)		– (D RIT)		– (D RIT)		– (D RIT)		– (D RIT)		– (D RIT)		– (D RIT)	
XIT		– (D RIT)		– (D RIT)		– (D RIT)		– (D RIT)		– (D RIT)		– (D RIT)		– (D RIT)		– (D RIT)
Slope high*2, 3	– (SSB H)		+ (SSB H)		+ (CW H)		– (CW H)		– (FSK H)		+ (FSK H)					
Slope low																
8.83MHz window-joining*4, 5	– (D 883)			+ (D 883)												
455kHz window-joining																

*1 : Although receiver data has an independent value for each mode, the data area for calculation is D OFFSET.
Transmitter data is fixed because the 8.83MHz filter bandwidth is fixed.

*2 : Although it has an independent value for each mode, the data area for calculation is D SLOP L.

*3 : The slope low-cut is carried out at 455kHz and high-cut is carried out at 8.83MHz.

*4 : The LSB and USB may have the same value because the filter bandwidth is wide.

*5 : The positive direction for adjustment is the direction in which the receive carrier frequency increases.

*6 : The DDS1 variable frequency is 1.45MHz and is shifted by 500kHz.

Table 5 LO1 frequency configuration

CIRCUIT DESCRIPTION

Component	DDS2 (LO3)															
	LSB		USB		CW		CW-R		FSK		FSK-R		AM		FM	
	RX	TX	RX	TX	RX	TX	RX	TX	RX	TX	RX	TX	RX	TX	RX	TX
BASE	1.625MHz*6															
Mode offset																
Filter offset																
CW pitch																
FSK tone (H/L)																
FSK shift (polarity)																
RIT/XIT																
Slope high*1, 3	– (SSB H)		+ (SSB H)		+ (CW H)		– (CW H)		– (FSK H)		+ (FSK H)					
Slope low*2, 3	– (SSB L)		+ (SSB L)		+ (CW L)		– (CW L)		– (FSK L)		+ (FSK L)					
8.83MHz window-joining*4, 5	– (D 883)			+ (D 883)												
455kHz window-joining*4, 5	+ (D 455)			– (D 455)												

*1 : Although it has an independent value for each mode.

*2 : Although it has an independent value for each mode.

*3 : The slope low-cut is carried out at 455kHz and high-cut is carried out at 8.83MHz.

*4 : The LSB and USB may have the same value because the filter bandwidth is wide.

*5 : The positive direction for adjustment is the direction in which the receive carrier frequency increases.

*6 : Since the DDS2 output frequency is high, 1.625MHz (10MHz – output frequency (8.375MHz)) is output to the DDS.

Table 6 LO3 frequency configuration

Component	DDS3 (LO4)															
	LSB		USB		CW		CW-R		FSK		FSK-R		AM		FM	
	RX	TX	RX	TX	RX	TX	RX	TX	RX	TX	RX	TX	RX	TX	RX	TX
BASE	455kHz															
Mode offset (kHz)	–11.30859375		+11.30859375		+11.30859375		–11.30859375		–11.30859375		+11.30859375		+11.30859375		+11.30859375	
Filter offset*1	– (OFS SSB)	–2k	+ (OFS SSB)	+2k	+800		–800									
CW pitch																
FSK tone (H/L)									–2125 /–1275		+2125 /+1275					
FSK shift (polarity)											+ (FSK S)	+ (FSK S)				
RIT/XIT																
Slope high																
Slope low*2, 3	– (SSB L)		+ (SSB L)		+ (CW L)		– (CW L)		– (FSK L)		+ (FSK L)					
8.83MHz window-joining																
455kHz window-joining*4, 5	– (D 455)			+ (D 455)												

*1 : Although receiver data has an independent value for each mode.
Transmitter data is fixed because the 8.83MHz filter bandwidth is fixed.

*2 : Although it has an independent value for each mode.

*3 : The slope low-cut is carried out at 455kHz and high-cut is carried out at 8.83MHz.

*4 : The LSB and USB may have the same value because the filter bandwidth is wide.

*5 : The positive direction for adjustment is the direction in which the receive carrier frequency increases.

Table 7 LO4 frequency configuration

CIRCUIT DESCRIPTION

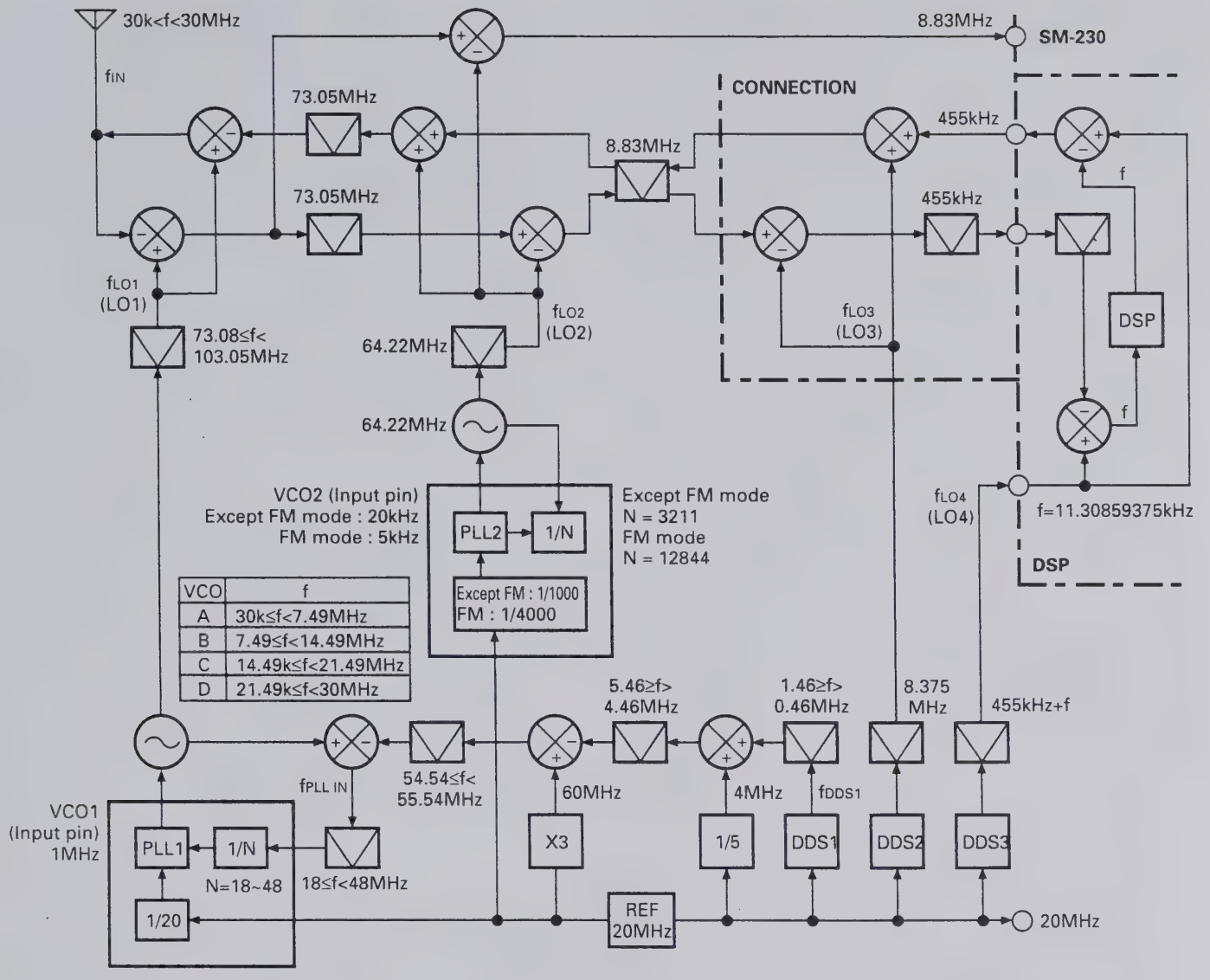

Fig. 6 Frequency configuration

CIRCUIT DESCRIPTION

Transmitter Circuit

The transmitter system block diagram is shown in Figure 7.

The TS-870S has the same frequency configuration as the TS-850 after the DSP generates the IF signal and converts it to 455kHz as a basic configuration.

A difference from the conventional model other than DSP modulation is that the TS-870S uses a digital-to-analog converter and a microcomputer for various controls. This allows for fine control and reduces the number of controls needed for adjustment.

The TIF (second IF) signal output from the TX-RX unit goes to the final unit (C/5 connection section). The signal is converted from 455kHz to 8.83MHz. The 8.83MHz third IF signal converted by the Q470 and Q471: 3SK131(M) mixer is switched to the transmitter by the D450 diode switch, and output from CN412 to the RF unit (A/9 RF section) as TR88 signal.

The signal input to CN10 of the RF unit is passed through the 8.83MHz IF filter used for both transmission and reception. During transmission, XF3 BW: 5kHz is selected by D69 and D67 and the filter attenuates the components outside the band. The transmit signal switched by D68 is amplified and ALC-controlled by the Q39 ALC amplifier, and the resulting signal goes to the D49 TX gain control circuit. This circuit controls the gain at the transmission stage according to the given voltage via a variable attenuator of a pin diode. The control voltage is controlled by a microprocessor, and is used to set the gain for each band or set the gain with the PWR knob and mode.

The third IF signal is then converted to the 73.05MHz fourth IF signal by the Q37 and Q38 : 3SK131(M) mixer. The signal is passed through the LC filter, and is converted to the target frequency by the final local oscillator LO1 at the Q35 and Q36 : 3SK184(R) mixer. The signal is passed through the radiation filter and the band-pass filter used by both the transmitter and receiver sections to attenuate the spurious outside the band. The band-pass filter output is amplified by Q5 : 2SC2954, and output to the final unit (A/5 final section) from CN4 as the drive signal.

■ TX-AGC

The DSP controls the input level until it starts modulation. It is like AGC applied to the microphone amplifier, and when the input level exceeds the certain level, the amplifier gain decreases to keep the modulator input level constant, i.e., to keep the IF output constant.

The MIC gain control in SSB and AM modes is used to adjust the maximum gain of the AGC amplifier in the 40dB range. Even if the control is set maximum, the input level to the modulator is kept constant. If the PROC is OFF in SSB mode, the CAR level (TIF output level) is fixed, and the ALC effect is limited. If the PROC is ON in SSB mode, the ALC effect is adjusted by the CAR control. The microphone amplifier gain is fixed, but the speech processor input level is controlled by the AGC and then becomes the level set by the PROC control.

In FM mode, the microphone amplifier sensitivity can be changed to high or low by using Menu No.61. Since the frequency deviation is limited by the TX-AGC, it is not distorted extremely like in the clipper method. In AM mode, the sensitivity is controlled so that modulation does not exceed 70%.

The TX-AGC is required to stabilize the DSP modulator operation. The modulator may operate without using the AGC by reduction of the gain and input level, but it cannot be completely turned OFF. Care must therefore be taken when measuring the ALC properties and frequency characteristics.

CIRCUIT DESCRIPTION

AT Unit (Auto Antenna Tuner)

When the AUTO/THROUGH switch is set to AUTO, ATA goes LOW, the AUTO/THROUGH switching relay K1 is executed, and AT is inserted to prepare for tuning. If "RX AT ON" is set in menu No.8, AT is inserted during reception. If the position of variable capacitor VC1 or VC2 is not the preset position of the band, presetting is performed. The AT tune and transmission do not occur until presetting ends.

When AT TUNE is turned on with this condition, ATS goes HIGH, the CW mode is set, and the transmission output becomes about 10W. If the SWR is lower than 1.2, the tuning is completed and auto antenna tuning ends. If the SWR is greater than 1.2, the motor control pulse duty (described later) is controlled according to the SWR.

The SWR can be set to 1.6 after AT tuning by turning menu No. 33 "TUNE WIDE" ON.

The motor speed is determined by a microcomputer. Its direction is controlled by phase comparator IC1 and amplitude comparator IC6 if the APRE is LOW, and controlled by the microcomputer if the APRE is HIGH.

■ Auto tuning mode

The transmission power from the final section via the filter section is passed through the current/voltage detection transformer L1 and L2, which use a troidal core. The current and voltage components detected here are rectified by the waveform rectification circuit consisting of D4, D7, Q1, and Q2, and then the phase is compared by IC1. The output signals ($\overline{Q}$ and Q) from pins 8 and 9 of IC1 are passed through the switch by IC2 and are applied to motor drive IC IC4. Variable capacitor VC1 is rotated by the motor M1 so that the phase difference of the voltage and current components decreases.

The voltage and current components detected by L1 and L2 are rectified by diodes D1 and D2 and are applied to the comparator of voltage comparison circuit IC6 as the amplitude component. The comparator output is passed through switch IC3. Motor M2 is driven by another motor drive IC IC5 and variable capacitor VC2 is rotated in the direction that decreases the amplitude difference of the voltage and current components.

Variable capacitor VC1 for capacity adjustment is therefore controlled so that the current and voltage phases match. Variable capacitor VC2 for resistance adjustment is controlled so that the current and voltage amplitude difference decreases. SWR becomes 1 when the phases match and the amplitude difference is zero.

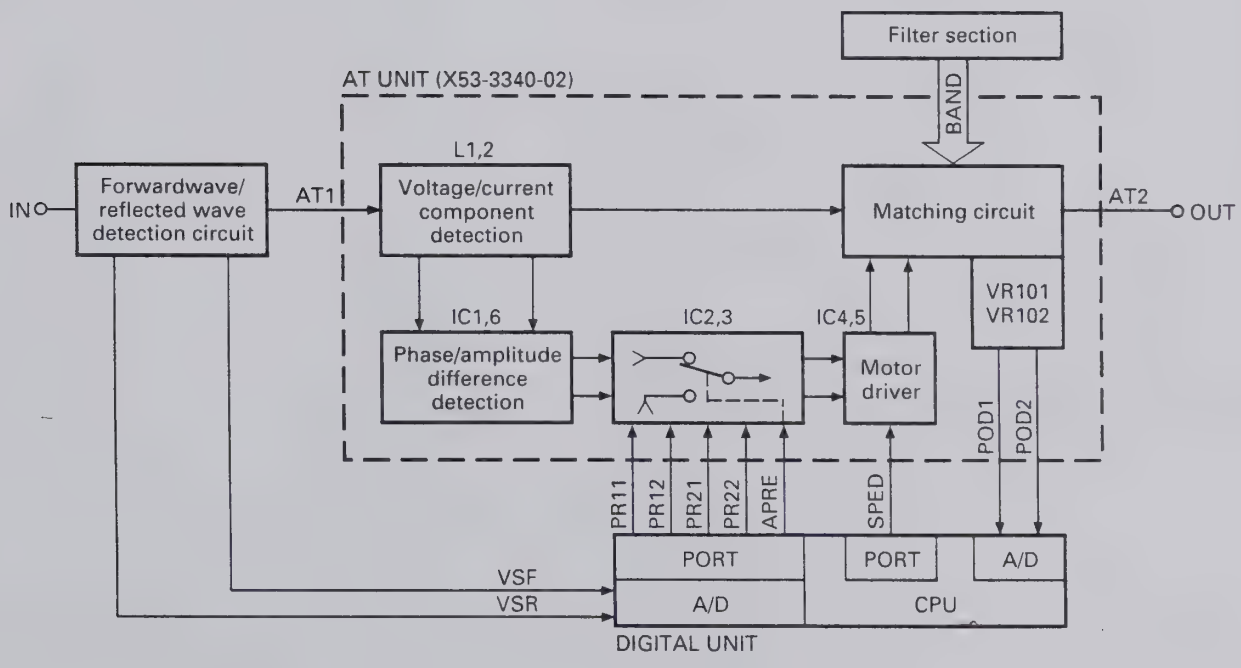

Fig. 9 AT unit block diagram

CIRCUIT DESCRIPTION

The speeds of motors M1 and M2 are determined by the duty cycle of the pulse input to control input pin 8 of IC4 and IC5, and controlled by the standing wave ratio (SWR) calculated by the control unit CPU.

Pulse signal SPED output from the control unit is passed through Q5 : DTC114EK, amplified by Q4, and input to IC4 and IC5 as a control pulse.

If the SWR is 2 or more, the duty cycle of the motor drive voltage pulse is 100%. If the SWR is 1.5 to 2, the duty cycle becomes approx. 80%. If the SWR is less than 1.5, the duty ratio becomes approx. 50% and the motor runs at low speed.

The matching circuit is T type, and the tap position from 1.8 to 30MHz is switched by seven relays K101 to K103 and K105 to K108.

Position detection volumes VR101 and VR102 are linked to the rotation axes of variable capacitors VC1 and VC2 with a gear ratio of 1 : 1. The voltages of 0 to 5V (POD1 and POD2) are generated according to the capacities of the variable capacitors. This position voltage data is sent to the microprocessor in the control unit through the analog to digital converter, and is used as the reference voltage in the feedback control system, such as for preset tuning. The same signal is also used for presetting data and end-detection.

The volume used by the TS-870S is a normal one, not an endless one. Since the rotation angle of this volume is limited, the rotation range is from the minimum capacity to the maximum capacity plus allowance.

By this control, like the preset tuning, which will be described later, POD1 and POD2 are monitored by the microprocessor. If the lower limit voltage of 0.6V or the upper limit voltage of 4.2V is reached, the microprocessor detects that the voltage is close to a limit. To return the voltage to the opposite side, APRE is made HIGH. If the variable capacitor is VC1, and the voltage is close to the lower limit in respect to POD1, the voltage near the upper limit is output. If the voltage is close to the upper limit in respect to POD1, the voltage near the lower limit is output.

The other variable capacitor VC2 outputs the voltage read by POD2 as it is. If the variable capacitor voltage exceeds the specified limit, it returns to the other limit. The other variable capacitor remains in the same position.

If the APRE is HIGH, the motor rotation direction is determined by the CPU unless auto tuning is performed.

The logic for PR11 to PR22 is the same as for IC4 and IC5 : BA6109U2. The signal output from the digital unit passes through IC2 and IC3 : TC4066BP and enters IC4 and IC5.

		PR11	PR12	PR21	PR22
Motor 1	Normal rotation	H	L	–	–
	Reverse rotation	L	H	–	–
Motor 2	Normal rotation	–	–	H	L
	Reverse rotation	–	–	L	H

■ Preset tuning

When tuning ends, the position of the variable capacitor is stored in memory by the microprocessor as preset data for that band.

When the band is changed after tuning is performed in another band, APRE goes HIGH, the motor is controlled by the microprocessor, and preset tuning is performed. During preset tuning, auto tuning or signal transmission is inhibited even if the AT TUNE switch is pressed or transmission becomes ready.

The initial preset-data when the microprocessor is reset includes standard data for a 50-ohm load on each band.

■ Preset memory band

30kHz ≤ f
1.850MHz ≤ f
2.010MHz ≤ f
3.525MHz ≤ f
3.575MHz ≤ f
3.725MHz ≤ f
4.490MHz ≤ f
7.030MHz ≤ f
7.100MHz ≤ f
7.490MHz ≤ f
10.490MHz ≤ f
14.100MHz ≤ f
14.490MHz ≤ f
20.990MHz ≤ f
21.150MHz ≤ f
21.990MHz ≤ f
25.490MHz ≤ f
29.000MHz ≤ f

CIRCUIT DESCRIPTION

Standby Control and Timing

Standby control and timing are carried out by using software for the main CPU in the control unit (X53-356X-XX). The control signals for the control unit are listed below. (See Figure 10 for each timing chart.)

SS : Standby switch input signal. Active LOW.
KEY : Keying input signal from the keyer. Active LOW.
TXC : Transmission output signal. Active HIGH. Same timing as TXB.
RXC : Reception output signal. Active HIGH. Same timing as RXB.
CKY : Output signal. Active HIGH.

With the SS line

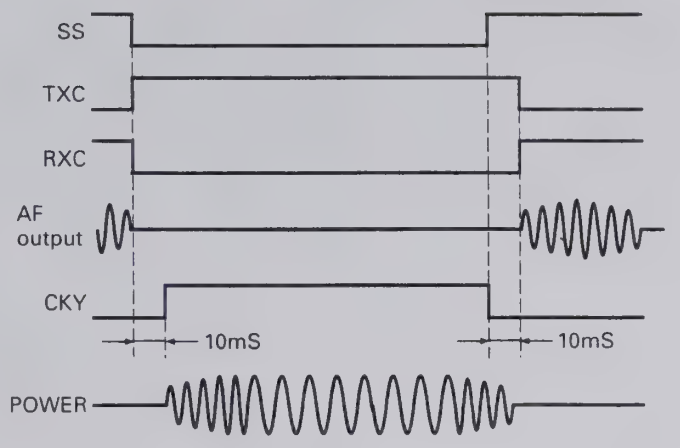

By full break-in

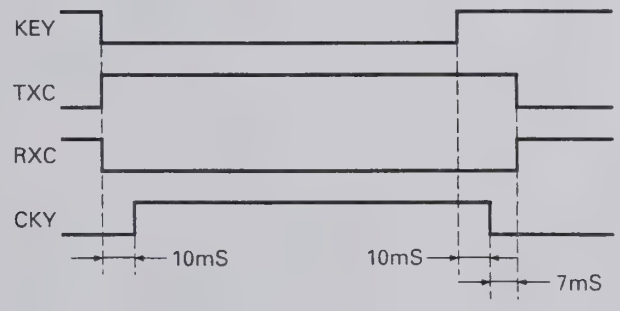

by semi break-in

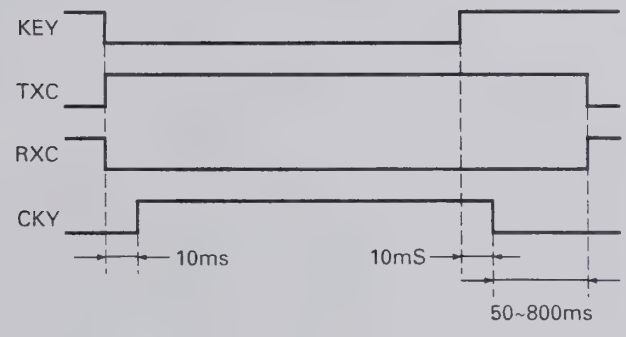

Fig. 10 Transmit/receive signal timing chart

CIRCUIT DESCRIPTION

Digital Control Unit

The TS-870S digital control circuit has a multiple chip configuration centered around the main CPU (IC6 : M37702S4BFP), and consists of a 64K ROM (IC12 : 27C512RJLVC), an 8K RAM (IC8 : LC3564QME-10), and an extended I/O (IC16, IC22, IC23 : CXD1095Q). This circuit controls about 60 different input and about 80 different output signals.

Figure 11 is a digital control block diagram.

■ Address control

The main CPU operates in the microprocessor mode in which the external ROM is used. The memory is configured as shown in the memory map, and the main CPU A12 to A15 and D0 signals and IC14, IC17, IC18, and IC19 are used to generate a chip select (CS) signal to select and access an IC. (Figure 12)

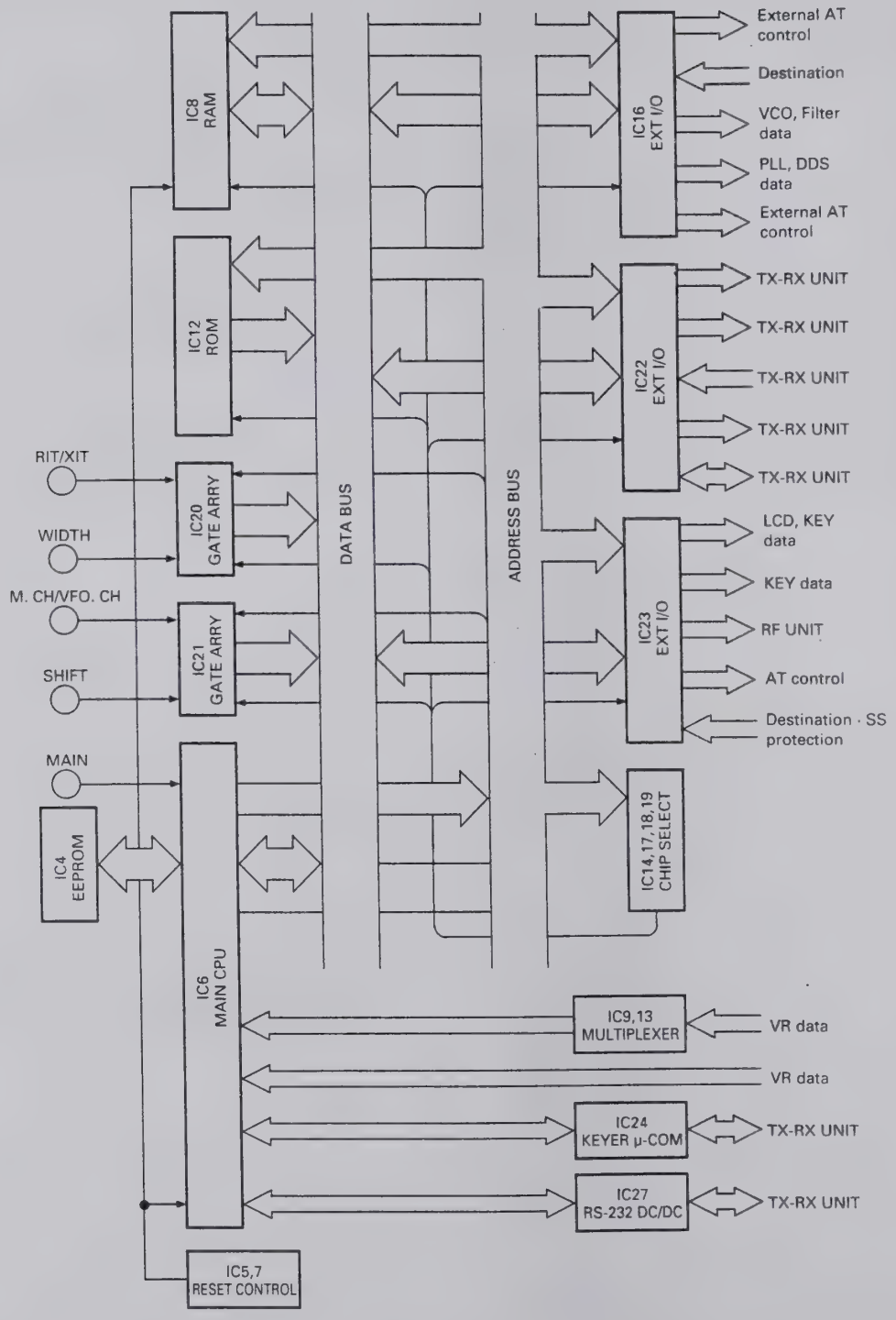

Fig. 11 Digital control block diagram

CIRCUIT DESCRIPTION

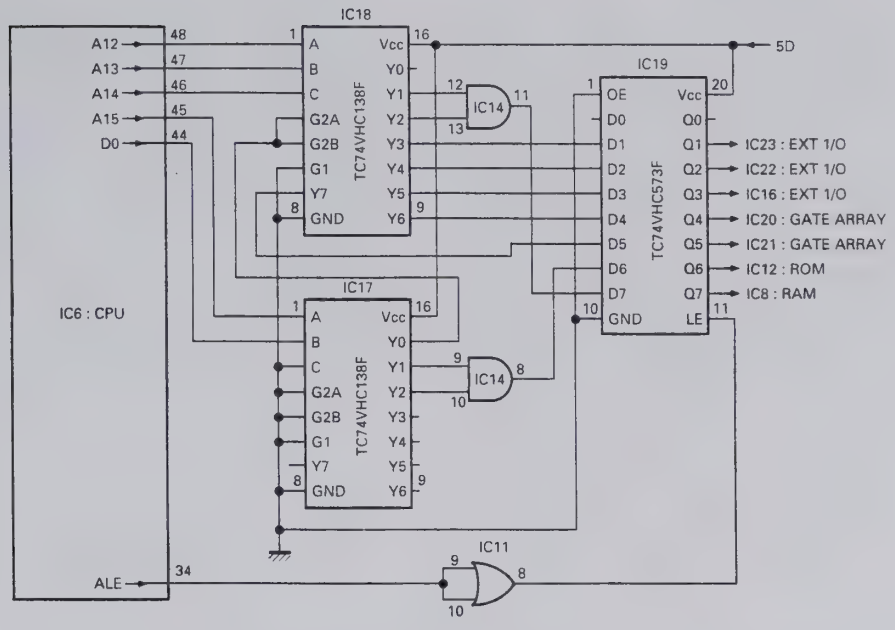

Fig. 12 Address control circuit

■ Encoder circuit

The main encoders are magnetic rotary encoders, and the click, RIT, SHIFT, and WIDTH encoders are contact-type rotary encoders.

The main encoder pulses are read directly by the main CPU.

The other encoder pulses enter the gate array (IC20 and IC21 : LZ92K371), and are read through the main CPU data bus. The gate array is selected by the latch (IC19 : TC74VHC573F) Q4 and Q5. The CK1, CK2 or CK3, CK4 encoder is selected by A0 of the gate array. Encoder data is output to D0 to D7 by making the read signal (RD) LOW when the chip select (CS) signal is LOW. IC25 and IC26 absorb encoder pulse chattering. (Figure 13)

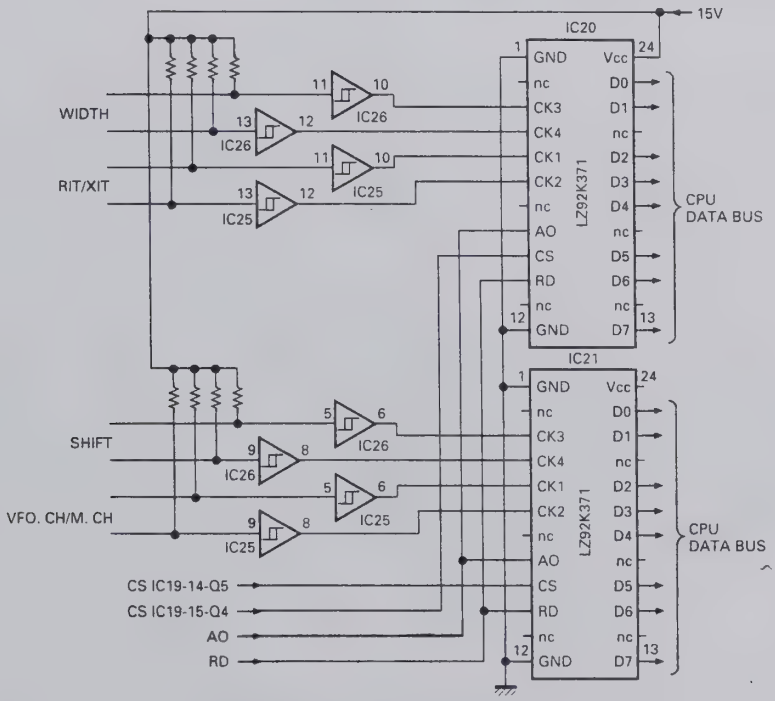

Fig. 13 Encoder circuit

CIRCUIT DESCRIPTION

■ System reset and RAM backup

The power monitor circuit (Q1, Q2, D4, D5, R6) monitors the power supply voltage. If the voltage is LOW, the circuit outputs a LOW signal to the INT1 port of the main CPU and the IRQ2 port of the microprocessor in order for the electronic keyer to stop operation. At the same time, the battery backup IC (IC5 : MB3780A) backs up the RAM with a lithium battery.

If the power supply voltage becomes normal, a HIGH signal is input to the INT1 port and the IRQ2 port, and the main CPU is initialized by the battery backup IC after the time constant set by C56 and C57. The operation resumes and power is supplied to the RAM from the outlet. (Figure 14)

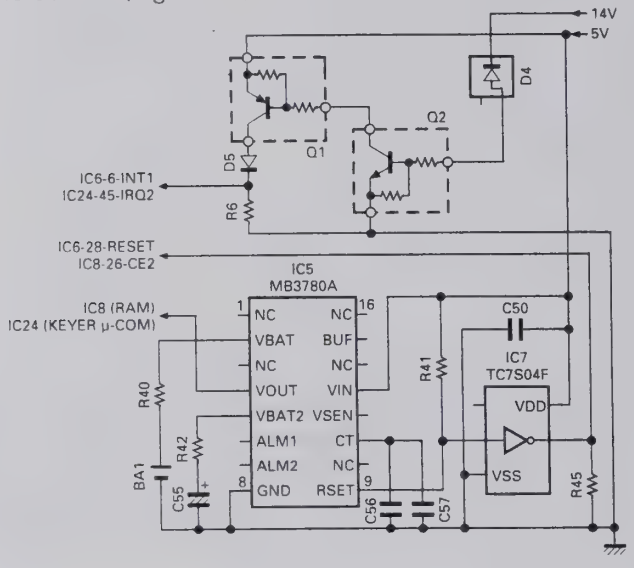

Fig. 14 System reset and RAM backup

■ Analog Signal Input

The main CPU incorporates an 8-channel analog-to-digital (A/D) converter, and in addition, has a multiplexer (IC9 and IC13 : TC4052BF) for entering 16-channel analog signals. Incoming analog signals are converted by the main CPU to digital values, which are used as digital data.

■ Display

Since the TS-870S uses a negative LCD and a fluorescent display tube.

The LCD is lighted with half a duty by the LCD driver, and the fluorescent display tube is lighted by an inverter.

The LCD driver data is set by the clock signal (UCK1), data signal (UDA1), and enable signals (ENL2, ENL3). The blanking signal (BLANK) turns the LCD driver OFF, and the dimmer signal (DIM) changes the inverter duty for dimmer.

■ Key scan

The PB0 and PB7 of IC23 and O2 to O8 of IC501 form a keyboard matrix. A key scan signal (a negative pulse) is output from the O2 to O8. One column corresponding to the PB0 and PB7 is selected, and the state of that switch is read. When the switch at the intersection of the matrix is pressed, the PBx port bit goes LOW. Thus, which switch is pressed can be detected. The key chattering is eliminated by software. (Figure 15)

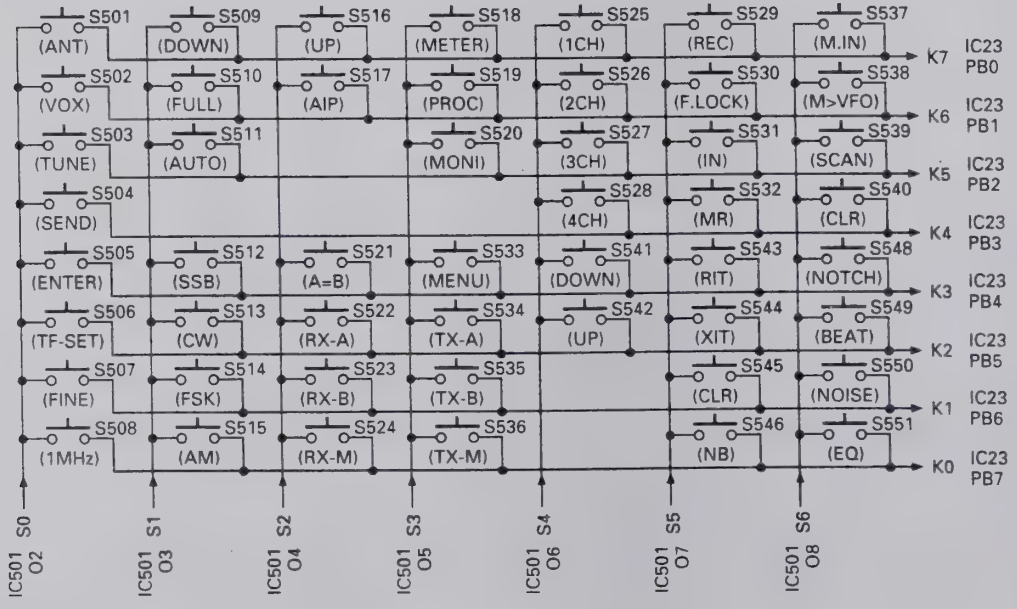

Fig. 15 Key scan circuit

CIRCUIT DESCRIPTION

■ PLL and DDS data

The TS-870S has three PLLs and three DDSs in the PLL section in the RF unit. The main CPU sends data to the PLL ICs and DDS ICs according to the displayed frequency. The PLL ICs provide unlock (UNL) signals. If one of the PLLs should unlock, the display indicates that the PLL is unlocked (Err-FE).

The TX-RX unit also has a PLL IC, to which the main CPU sends 46.32MHz data. The PLL IC also outputs an unlock signal (PLUL), and if a PLL is unlocked, an unlock message (Err-FD) is displayed.

■ AT control

The AT control inputs the variable capacitor position data (POD1, POD2, analog data input), forward wave voltage and reflected wave voltage (VSF, VSR, analog data input) for SWR calculation in the main CPU, and outputs the motor normal/reverse rotation control (PR11, PR12, PR21, PR22), motor speed control signal (SPED), and motor control switching signal (APRE).

SPED switches the motor rotation ON and OFF during AT tune and presetting by PWM with the duty cycle related to the SWR value.

APRE changes the motor normal/reverse rotation control to analog control for AT tune, and to digital control for presetting.

PR11 to PR22 control the motor normal/reverse rotations and stop when the motor normal/reverse control signal is controlled digitally. (Figure 16)

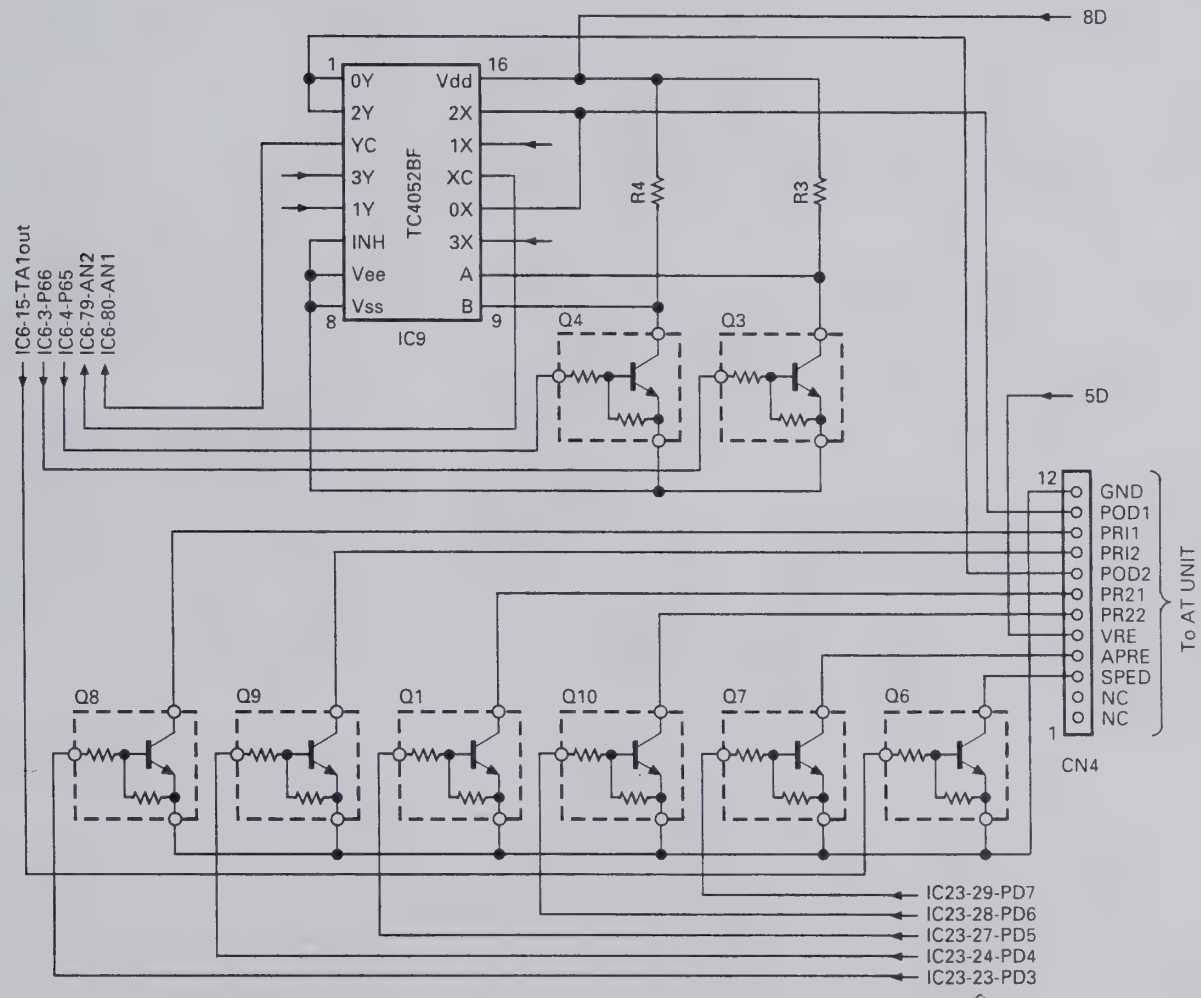

Fig. 16 AT control

CIRCUIT DESCRIPTION

■ IF filter switching

The IF filter switching signal from the control unit is controlled by PC0 to PC2 (pins 11 to 13) of IC23 and sent to the RF unit and final unit connection section.

The RF unit selects the 8.83MHz IF filter, and the final unit connection section selects the 455kHz IF filter.

The IF filter select signal is automatically interlocked with the WIDTH control.

SSB		CW		FSK		AM		FM	
WIDTH	IF FILTER	WIDTH	IF FILTER	WIDTH	IF FILTER	WIDTH	IF FILTER	WIDTH	IF FILTER
1.4k	3k	50	3k	250	3k	5.0k	6k	5.0k	15k
1.6k	↑	200	↑	500	↑	6.0k	15k	6.0k	↑
1.8k	↑	300	↑	1.0k	↑	8.0k	↑	8.0k	↑
2.0k	↑	400	↑	1.5k	↑	10.0k	↑	10.0k	↑
2.2k	↑	600	↑			12.0k	↑	12.0k	↑
2.4k	↑	1.0k	↑			14.0k	↑	14.0k	↑
2.6k	6k								
2.8k	↑								
3.0k	↑								
3.2k	↑								
3.4k	↑								
4.6k	↑								
6.0k	15k								

Table 9 IF filter selection

■ Receive band-pass filter selection

The RF BPF signal from the control unit is sent from PC6 (pin 17) of IC23 to the RF unit as serial data. The serial-to-parallel converter (TC9174F) in the RF unit converts serial data to parallel data and switches between band-pass filters.

■ Transmit low-pass filter selection

The LPF signal from the control unit is sent as serial data from PC1 (pin 12) of IC16 to the final unit filter section via the final unit connection section. The serial-to-parallel converter (TC9174F) in the final unit filter section converts serial data to parallel data and switches between low-pass filters.

■ PLL VCO data

The RF unit PLL section switches between VCOs according to the VCO band data (VB0 to VB3) output from PC4 to PC7 (pins 15 to 18) of IC16 in the control unit.

■ Electronic keyer

The TS-870S uses a dedicated IC (IC24 : 68HC05G2419553) to control the electronic keyer. The main CPU CH1 to CH4 signals switch operations to the electronic keyer IC (keyer microprocessor).

The keyer microprocessor controls the electronic keyer according to KEY SPEED VR data, DOT/DASH signal, and CH1 to CH4 signals switch operation signals from the main CPU.

The keyer microprocessor is normally at the standby mode (power save mode). Each control signal is connected to PB7 (pin 77). When this port is LOW, the standby mode is terminated.

When the standby mode is cancelled, PA7 (pin 30) outputs a HIGH signal. It is used to determine which control signal is active : CH1 to CH4, KEY SPEED VR data, or DOT/DASH signal.

PA2 (pin 25) is an input/output port that inputs KEY SPEED VR data and outputs control signal (HIGH) for VR data determination.

When a HIGH signal is output from PA2 (pin 25), C114 is charged. KEY SPEED VR data is calculated until C114 is discharged and the port goes LOW.

IRQ2 (pin 41) is an interrupt port that detects power supply voltage drop. When this port detects it, the standby mode is entered.

The keyer microprocessor outputs the key down and beep signals. The key down signal is input to IC22 (PC4 : pin 15), and the main CPU controls transmission and reception. The beep signal is input to IC29 (TC7S32F : OR gate) and output to the TX-RX unit as CKY.

The TX-RX unit determines the key jack ON/OFF and CKY level and outputs sidetone.

CIRCUIT DESCRIPTION

■ Band data

Frequency (MHz)		RF BPF (RB)		LPF	VCO				PLL	Frequency (MHz)		RF BPF (RB)		LPF	VCO				PLL
Lower limit	Upper limit	RX	TX		A	B	C	D	N	Lower limit	Upper limit	RX	TX		A	B	C	D	N
0.01	0.49	1	1	1	1	0	0	0	38	15.49	15.99	10	10	6	0	0	1	0	23
0.49	0.99	2	2						38	15.99	16.49								22
0.99	1.705								37	16.49	16.99								22
1.705	2.01	3	3						37	16.99	17.49								21
2.01	2.49			2					36	17.49	17.99								21
2.49	2.99	4	4						36	17.99	18.49								20
2.99	3.49								35	18.49	18.99								20
3.49	3.99								35	18.99	19.49								19
3.99	4.49	5	5						34	19.49	19.99								19
4.49	4.99			3					34	19.99	20.49								18
4.99	5.49								33	20.49	20.99								18
5 49	5.99								33	20.99	21.49	11	11						17
5.99	6.49								32	21.49	21.99	12	12		0	0	0	1	17
6 49	6.99								32	21.99	22.49			7					16
6.99	7.3	6	6						31	22.49	22.99								16
7.3	7.49	7	7						31	22.99	23.49								15
7.49	7.99			4	0	1	0	0	31	23.49	23.99								15
7.99	8.49								30	23.99	24.49								14
8.49	8.99								30	24.49	24.99								14
8.99	9.49								29	24.99	25.49								13
9.49	9.99								29	25.49	25.99			8					13
9.99	10.49								28	25.99	26.49								12
10.49	10.99	8	8	5					28	26.49	26.99								12
10.99	11.49								27	26.99	27.49								11
11 49	11.99								27	27.49	27.99								11
11.99	12.49								26	27.99	28.49								10
12.49	12.99								26	28.49	28.99								10
12.99	13.49								25	28.99	29.49								9
13.49	13.99								25	29.29	29.99								9
13 99	14.35	9	9						24	29.99	30								9
14.35	14.49	10	10						24										
14.49	14.99			6	0	0	1	0	24										
14.49	15.49								23										

CIRCUIT DESCRIPTION

■ Function of IC pins

1) CPU : M37702S4BFP (Control unit IC6)

Pin No.	Port name	Pin name	I/O	Function	Active level	Initial state
1	AN0	ADR0	I	VPRC, VMON, VAGC signal		
2	P67	RES	O	Reset signal output	L	H
3, 4	P66, P65	CTB, CTA	O	Analog switch select control signal B, A	H	H
5	INT2	PSW	I	Power switch inhibit signal	H	
6	INT1	BOVR	I	14V voltage drop inhibit signal		
7	INT0		I	Unused		
8, 9	TA4IN, TA4OUT	EDP1, EDP2	I	Main encoder pulse input		
10, 11	TA3IN, TA3OUT		O	Unused		L
12, 13	TA2IN, TA2OUT		O	Unused		L
14	P53	AMUT	I	AF mute signal	L	H
15	TA1OUT	SPED	O	AT motor speed control	L	H
16	P51	LCD	O	LCD and LED serial data		H
17	P50	LCK	O	LCD and LED serial clock		H
18	P47	BLK	O	LCD all off control signal	H	L
19	P46	RBK	O	RF mute signal	L	L
20	P45	14VSW	O	Power on control signal	H	H
21	P44	ECS	O	EEPROM clock		H
22	P43	EED	I/O	EEPROM data		
23	PHI			Unused		
24	RDY		I	Bus wait cancel	H	
25	HORD		I	Hold state cancel	H	
26	BYTE		I	External data bus width 8 bit setting	H	
27	CNVss		I			
28	RESET		I	Reset signal input	L	
29, 30	Xin, Xout		I	Clock signal input		
31	E		O			
32	Vss		I			
33	HLDA					
34	ALE		O			
35	BHE					
36	R/W		O	Read/write signal		
37~44	D7~D0		I/O	Bus		
45~60	A15~A0		O	Address output		
61~64	P87~P84	PB0~PB3	O	Logic key CPU control 0~3	H	L
65	TXD0	TXD0	O	Personal computer interface serial output		H
66	RXD0	RXD0	I	Personal computer interface serial input		
67	P81	RTS0	O	Personal computer interface RTS	H	L
68	CTS0	CTS0	I	Personal computer interface CTS		
69	Vcc		I			
70	AVcc		I			
71	Vref		I			
72	AVss		I			
73	Vss		I			
74	AN7	ADR7	I	Forward wave voltage (VSF)		
75	AN6	ADR6	I	Reflected wave voltage (VSR)		
76	AN5	ADR5	I	ALC meter analog input		
77	AN4		I	Unused		
78	AN3	ADR3	I	VPWR, VMIC, VDLY, VCAR signal		
79	AN2	ADR2	I	POD2, VRF, POD2, VAF signal		
80	AN1	ADR1	I	POD1, VNB, POD1, VSQL signal		

CIRCUIT DESCRIPTION

2) CPU : 68HC05G2419553 (Control unit IC24)

Pin No.	Port name	Pin name	I/O	Function	Active level	Initial state
1	VDD		I			
2~5	PB3~PB0		I	CH4 to CH1 switch input signal from IC6		
6~13	AD0~AD7		I	Unused		
14	VrefH			Unconnected		
15	VrefL		I			
16	Vss		I			
17	VDD		I			
18, 19	XOSC1, XOSC2		I	Unconnected		
20	RES		I	Reset signal input		
21, 22	OSC1, OSC2		I	Clock input		
23	PA0	DOT	I	DOT input		
24	PA1	DASH	I	Dash input		
25	PA2	SPEED VR	I/O	KEY VR data determine port		
26~29	PA3~PA6		I	Unused		
30	PA7	int contro	O	Inhibit determine control signal	H	
31~33	PG0~PG2		I	Unused		
34	TCMP		I	Unconnected		
35	PG4		I	Unused		
36	PG5	EBSY	I	Unused		
37	PG6	MBSY	I	Unused		
38	PG7		I	Unused		
39~44	PC0~PC5		I	Unused		
45	IRQ2	sleep	I	14V voltage drop determine inhibit port		
46	PC7		I	Unused		
47	VDD		I			
48	PD0		I	Unused		
49	PD1	mbusy	O	Message busy signal		
50	PD2		I	Unused		
51	PD3	pbc	O	Beep output signal		
52	PD4		I	Unused		
53	PD5	KEY	O	Key signal output		
54	PD6		I	Unused		
55	PD7		I	Unconnected		
56~59	PE0~PE3		I	Unused		
60	Vss		I			
61~64	PE4~PE7		I	Unused		
65~72	PH0~PH7		I	Unused		
73~76	PJ0~PJ3		I	Unused		
77	PB7	WAKE UP	I	Wake up inhibit		
78~80	PB6~PB4		I	Unused		

CIRCUIT DESCRIPTION

3) Extended I/O : CXD1095Q (Control unit IC16)

Pin No.	Port name	Pin name	I/O	Function	Active level	Initial state
1, 2	NC					
3~7	PB1~PB5	SHIMO1~SHIMO5	I	Destination determine port	H	
8	PB6	50W	I	50W switch signal	L	
9	PB7	UNL	I	Unlock signal	H	
10	Vss		I			
11	PC0	ENF1	O	Serial/parallel convert enable	H	L
12	PC1	UDA23	O	Serial/parallel convert data		L
13	PC2	UCK23	O	Serial/parallel convert clock		L
14	PC3	NFMT	O	Control signal except FM transmit mode	L	H
15, 16	PC4, PC5	VB3, VB2	O	VCO band data	H	L
17	PC6	VB1	O	VCO band data	H	H
18	PC7	VB0	O	VCO band data	H	L
19	NC					
20	PD0	PLE2	O	VCO2 enable	H	L
21	PD1	PLE1	O	VCO1 enable	H	L
22	PD2	PCK	O	PLL clock		L
23	PD3	PDA	O	PLL data		L
24	PD4		O	Unused		L
25	Vss		I			
26	VDD		I			
27	PD5	DLE3	O	DDS3 enable	H	L
28	PD^	DLE2	O	DDS2 enable	H	L
29	PD7	DLE1	O	DDS1 enable	H	L
30~32	D0~D2		I/O	Bus		
33, 34	NC					
35~39	D3~D7		I/O	Bus		
40	CLR		I	Port E output register clear	L	
41	ODEN		I	Output disable	L	
42	Vss		I			
43	WR		I	Write signal	L	
44	RD		I	Read signal	L	
45	CS		I	Chip select signal	L	
46~48	A0~A2		I	Address signal		
49	PE0	P TTI	I	External AT TT input	H	
50	PE1	P TSI	I	External AT TS input	H	
51	NC					
52	PE2	MBSY	I	Electronic keyer busy signal		
53	PE3		I	Unused		
54	PA0	P TTO	O	External AT TT output	H	L
55	PA1	P TSO	O	External AT TS output	H	L
56	PA2		O	Unused		L
57	Vss		I			
58	VDD		I			
59~62	PA3~PA6		O	Unused		L
63	PA7	LOGKEY	O	Electronic keyer reset	H	L
64	PB0	SHIMO0	I	Destination determine port	H	

CIRCUIT DESCRIPTION

4) Extended I/O : CXD1095Q (Control unit IC22)

Pin No.	Port name	Pin name	I/O	Function	Active level	Initial state
1, 2	NC					
3~9	PB1~PB7		I/O	DSP bus		
10	Vss		I			
11	PC0		I	Unused		
12	PC1	KEYS	I	Electronic keyer connecting determine signal	L	
13	PC2	MD	I	Microphone UP switch signal	L	
14	PC3	MU	I	Microphone DOWN switch signal	L	
15	PC4	KEYI	I	Key input signal	L	
16	PC5	PLUL	I	PLL unlock in DSP	L	
17	PC6	EOM	I	DRU-3 EOM signal	H	
18	PC7	VBSY	I	VS-2 busy signal	L	
19	NC					
20	PD0	DRST	O	DSP reset signal Normally "H"	L	H
21	PD1	VCEN	O	Electronic volume DAC enable	L	H
22	PD2	UCK22	O	Serial/parallel convert clock signal		L
23	PD3	UDA22	O	Serial/parallel convert data signal		L
24	PD4	DREN	O	DRU-3 enable signal	L	H
25	Vss		I			
26	VDD		I			
27	PD5	PLEN	O	PLL enable in DSP	H	L
28	PD6	STR	O	VS-2 start signal	H	L
29	PD7		O	Unused		L
30~32	D0~D2		I/O	Bus		
33, 34	NC					
35~39	D3~D7		I/O	Bus		
40	CLR		I	Port E output register clear	L	
41	ODEN		I	Output disable	L	
42	Vss		I			
43	WR		I	Write signal	L	
44	RD		I	Read signal	L	
45	CS		I	Chip select signal	L	
46~48	A0~A2		I	Address signal		
49	PE0	HENA	O	DSP enable A	L	H
50	PE1	HENB	O	DSP enable B	L	H
51	NC					
52	PE2	HRW	O	DSP R/W signal		H
53	PE3		O	Unused		L
54~56	PA0~PA2		O	DSP address signal		L
57	Vss		I			
58	VDD		I			
59	PA3		O	Unused		L
60	PA4	P BEEP	O	Beep output signal	H	L
61	PA5	P CKY	O	Transmit output control signal	H	L
62	PA6	P RXC	O	Receive control signal	H	H
63	PA7	P TXC	O	Transmit control signal	H	L
64	PB0		I/O	DSP bus		

CIRCUIT DESCRIPTION

5) Extended I/O : CXD1095Q (Control unit IC23)

Pin No.	Port name	Pin name	I/O	Function	Active level	Initial state
1, 2	NC					
3~9	PB1~PB7	P K1~P K7	I	Key matrix input	L	
10	Vss		I			
11	PC0	6KFIL	O	Analog filter select signal	H	L
12	PC1	3KFIL	O	Analog filter select signal	H	H
13	PC2	15KFIL	O	analog filter select signal	H	L
14~16	PC3~PC5	P ENR3~P ENR1	O	RF serial/parallel convert enable	H	L
17	PC6	P UDA21	O	Serial/parallel convert data		L
18	PC7	P UCK21	O	Serial/parallel convert clock		L
19	NC					
20~22	PD0~PD2		O	Unused		L
23	PD3	P APRE	O	AT motor control signal		L
24	PD4	P PR22	O	AT motor 2 control signal		L
25	Vss		I			
26	VDD		I			
27	PD5	P PR21	O	AT motor 2 control signal		L
28	PD6	P PR12	O	AT motor 1 control signal		L
29	PD7	P PR11	O	AT motor 1 control signal		L
30~32	D0~D2		I/O	Bus		
33, 34	NC					
35~39	D3~D7		I/O	Bus		
40	CLR		I	Port E output register clear	L	
41	ODEN		I	Output disable	L	
42	Vss		I			
43	WR		I	Write signal	L	
44	RD		I	Read signal	L	
45	CS		I	Chip select signal	L	
46~48	A0~A2		I	Address signal		
49	PE0	P THP	I	Thermal protection signal	H	
50	PE1	P SS	I	Microphone PTT switch signal	L	
51	NC					
52	PE2		I			
53	PE3		O	Unused		L
54	PA0	P DIM	O	Dimmer control signal	H	H
55, 56	PA1, PA2	P ENL3, P ENL2	O	LCD driver enable signal	H	L
57	Vss		I			
58	VDD		I			
59	PA3	P LATC	O	AT LED	H	L
60, 61	PA4, PA5	P ENL1, P ENL4	O	Switch serial/parallel convert enable	H	L
62, 63	PA6, PA7		O	Unused		L
64	PB0	P K0	I	Key matrix input	L	

CIRCUIT DESCRIPTION

TX-RX Unit (DSP Operation)

■ Outline

The TS-870S uses the DSP to carry out various processing as compared with the conventional models. They include the following:

- Modulation and demodulation
- Filter processing
- AGC processing (S-meter data output)
- Mic amplifier AGC processing
- VOX processing
- Voice equalizing processing
- Noise processing (noise reduction, beat cancel, automatic notch)
- Speech processing (COMP meter data output)
- Squelch processing
- Sidetone and beep generation

The commands and data for the microprocessor are listed below (see page 42).

The TX-RX unit circuits are divided into the analog section that processes analog signals and digital section that processes digital data. The interface between the analog and digital sections is the analog-to-digital converter (IC25 : AK5340-VS) and digital to analog converter (IC16 and IC27 : AK4318-VS, IC34 : PCM69AU).

The unit has another digital to analog converter (IC26 : M62363FP) for VCA (electronic volume : M51131L) control. The volume is controlled directly by the microprocessor in the control unit (the volume is not controlled by the DSP).

■ Digital section

The digital section is explained below. Figure 17 is a digital section block diagram.

The digital section consists of two DSPs (IC1 and IC2 : DSP56002FC40), RAM (IC7 : MCM56824AFN2*), three ROMs (IC4, IC5, IC6 : 27C256PCJJ**), and gate array (IC3 : MBCG24173-6173) and PLD (IC9 : 7032LC44JLQ*). The TX-RX unit has a PLL, but it is included in the digital section for convenience. * indicates the version number.

The PLL in the TX-RX unit is controlled directly by the microprocessor in the control unit, and clocks of a fixed frequency of 46.32MHz are generated. This circuit forms a VCO consisting of Q8 : 2SK210(GR), Q9 and Q10 : 2SC2714(Y). Q8 is an oscillator and Q9 and Q10 are buffer amplifiers. Q5, Q6, and Q7 comprise an active low-pass filter. This low-pass filter converts the output from PLL IC IC15 : MB86001PF to DC voltage and sends it to the VCO.

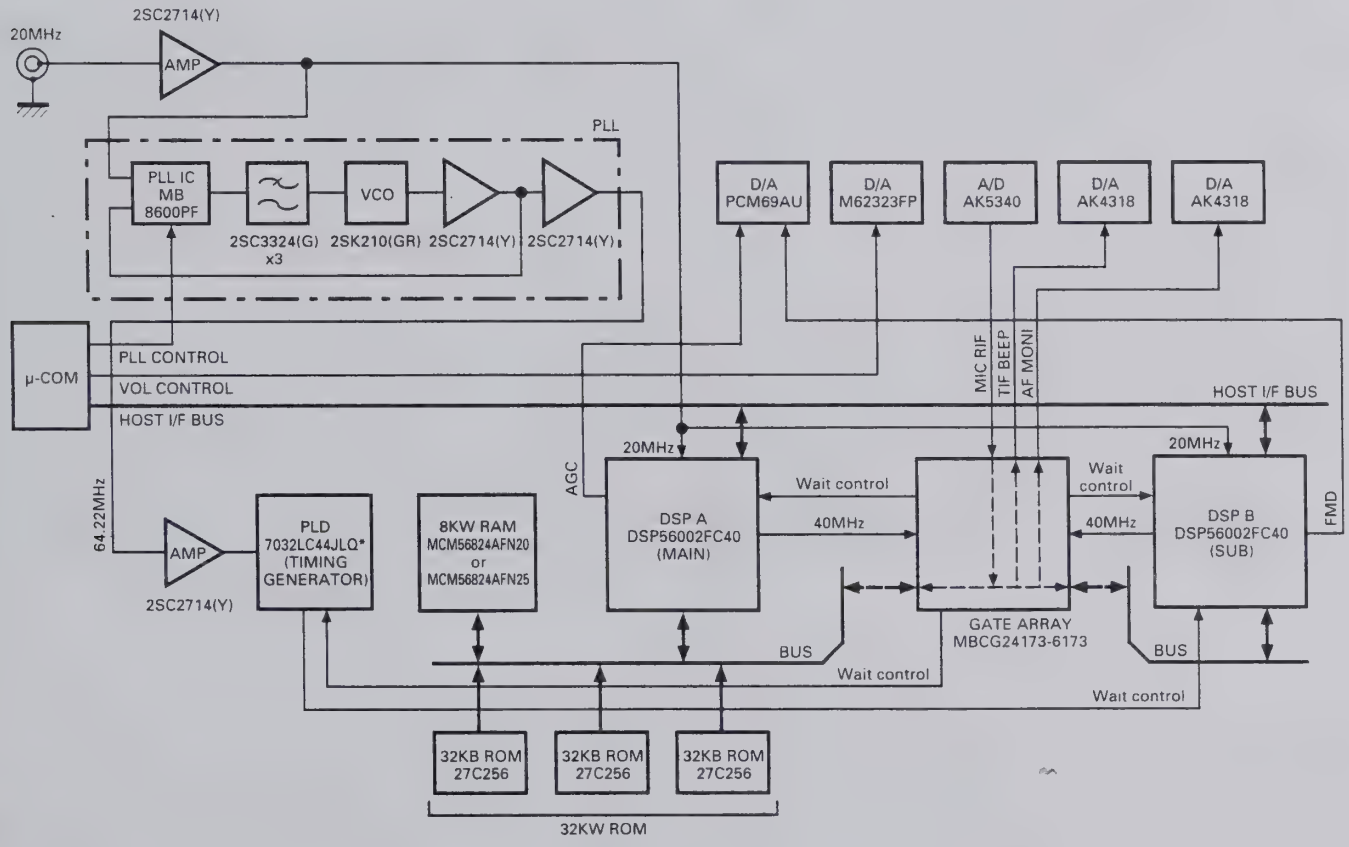

Fig. 17 Digital section block diagram

CIRCUIT DESCRIPTION

Figure 18 is a block diagram of the PLD (Programmable Logic Device). The clock with a sampling frequency fs (45.234375kHz) is generated from the 46.32MHz clock produced by the PLL in the TX-RX unit by the clock divider in the PLD. This clock is used for data transmission and reception between the analog-to-digital and digital to analog converters and gate array and data transmission and reception between the gate array, DSP, and the analog to digital and digital to analog converters. The PLD forms part of the bus control circuit for sharing the RAM and ROM with two DSPs and the circuit that accesses the ROM.

The gate array is used as the interface between the analog to digital and digital to analog converters and the DSP. Data is received from the analog to digital converter, or transmitted to the digital to analog converter, and each DSP is interrupted in the 1/fs sampling intervals. The gate array interfaces two DSPs for communication, and the two other DSPs control the bus for sharing the RAM and ROM.

The DSP has a 24 bit fixed-decimal DSP. It operates with the 40MHz clock, but the external 20MHz clock is given to the DSP. The DSP operates the 40MHz clock generated in the PLL in the IC. The clock is programmed to be output to pin 123 (CKOUT) of the DSP. Transfer of commands with the microprocessor is carried out through the host interface of the DSP.

The ROM and RAM are shared by two DSPs. When one of the DSPs is being accessed, the other DSP waits. It is carried out by the gate array and PLD. Three 8 bit ROMs are used to implement 24 bits.

The analog to digital converter (IC25 : AK5340-VS) is an 18 bit Δ-Σ type ADC for audio equipment. There are two channels, R and L. The R channel is used for the receive signal and the L channel is used for the microphone input signal. The digital to analog converter (IC16 and IC27 : AK4318-VS) is a 18 bit Δ-Σ type DAC for audio equipment. The digital to analog converter has two channels like the analog to digital converter : IC16 uses the R channel for the beep signal and the L channel for the transmit signal, and IC27 uses the R channel for the monitor signal and the L channel for the decode signal. Another digital to analog converter (IC34 : PCM69AU) is an 18 bit DAC for audio equipment, and uses the Rch for AGC and the L channel for audio signals in FM.

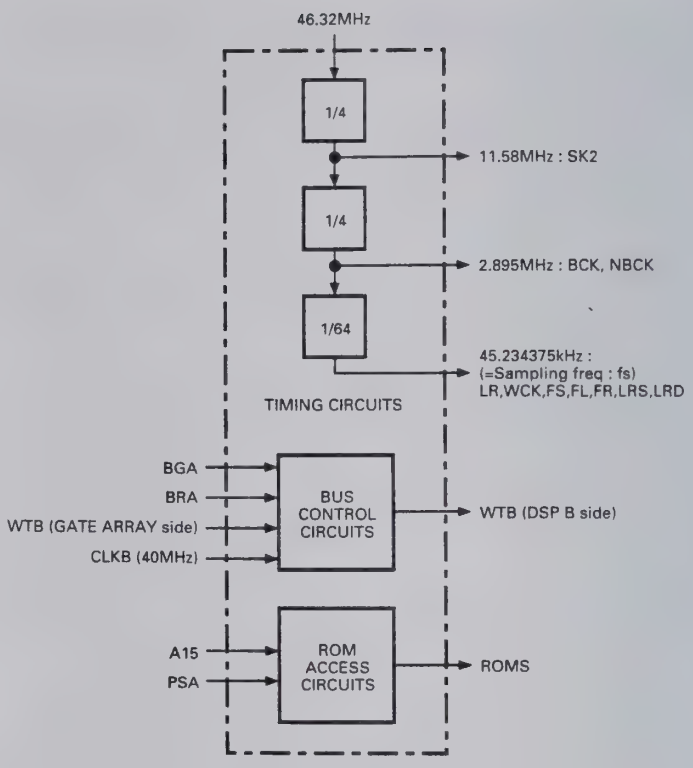

Fig. 18 PLD block diagram

■ Flow of transmit/receive signals

Flow of transmit/receive signals is explained below, together with the analog and digital sections. Flow of receive signals is explained first. See Figure 19.

The receive signal input from pin 3 (RIF) of CN1 is amplified by IC43 : NJM5532M. If a HIGH signal is input to RIF, its amplitude is limited to prevent any signal that exceeds the input range to the analog to digital converter (IC25 : AK5340-VS). The signal is passed through the band-pass filter and buffer amplifier, and its frequency is converted by the mixer (IC18 : MC74HC4053F). The frequency of the receive signal is about 1/4 of sampling frequency fs. The fs/4 frequency is the most stable frequency for digital signal processing. The receive signal of the fs/4 frequency is passed through the buffer amplifier, amplified by amplifier IC21 : NJM4560M, and converted to digital data by the analog to digital converter (IC25).

CIRCUIT DESCRIPTION

This data is read into the gate array (IC3 : MBCG 241873-6173) in sampling intervals 1/fs. The data read into the gate array is fed to the DSP in 1/fs for processing. DSP A (IC1 : DSP56002FC40) carries out auto notching, demodulation, noise processing, and squelch processing, and DSP B carries out AGC and filter processing.

AGC data, one of the DSP B operation results, is sent to the digital to analog converter (IC34 : PCM69AU) from pin 33 of DSP B (IC2: DSP56002 FC40) in 1/fs intervals. AGC data is converted to an analog current by IC34, and converted to an analog voltage by the I-V converter IC35 : AD822AR, and is output to the RF unit as the AGC voltage. The AGC voltage is reversed by the reversing amplifier IC35 : AD822AR, and the S-meter voltage used for packet communication is generated and output from the SMET terminal of ACC2 (J5).

The digital data demodulated by two DSPs is sent to the gate array in 1/fs intervals. The data is sent to the digital to analog converter (IC27 : AK4318-VS) from pin 68 of the gate array in 1/fs intervals and converted to an analog signal. The demodulate signal converted to an analog signal is passed through the third low-pass filter IC28 : NJM2100M. This low-pass filter eliminates the alias components. The demodulate signal then enters the VCA (IC29 : M51131L). The VCA attenuates and outputs the demodulate signal according to the voltage given to pin 8 of IC29. The voltage at pin 8 is the voltage corresponding to the rotational angle of the AF VOL, and is controlled by the microprocessor in the control unit. The demodulate signal is passed through the VCA, amplified by the AF amplifier (IC33 : LA4422), and output to the speaker and headphone.

Demodulation data used for packet communication is passed through low-pass filter IC28 : NJM2100M, then attenuated by the VCA IC31 : M51131L. The attenuation amount is determined by the value set on the menu. The signal is passed through the VCA and ACC2 (J5) through the buffer amplifier Q17 : 2SC 2412K(S), and output to the TNC.

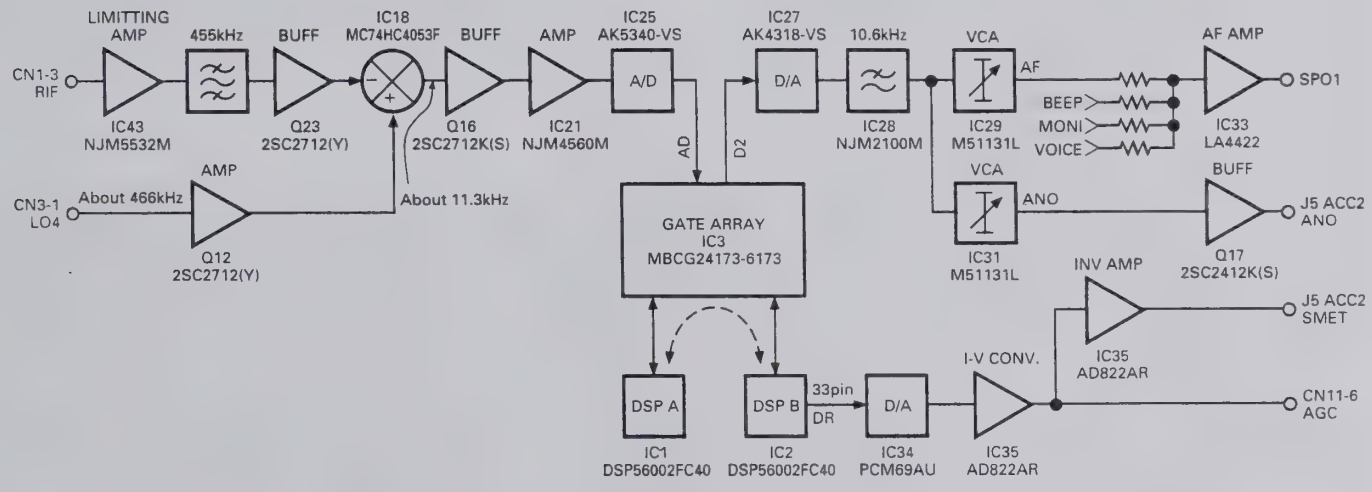

Fig. 19 Flow of receive signal

CIRCUIT DESCRIPTION

Then, flow of transmit signals is explained below. See Figure 20. If the mode is SSB, FM, or AM, the signal from the microphone is input. The signal enters the TX-RX unit through CN4. The signal is amplified by amplifier IC22 : AD822AR, and goes to the multiplexer (IC23 : MC74HC4052F). The multiplexer is used to switch between the microphone signal, the play signal from the DRU-3 (option), and packet signal. The signal passing through the multiplexer is amplified by amplifier IC24 : NJM2100M, and converted to digital data by the analog to digital converter (IC25 : AK5340-VS). The data is read into the two DSPs in the same way as for the receive signal. In transmit mode, DSP A carries out modulation, speech processing, and carrier signal generation in CW, FSK, and FM modes, while DSP B carries out VOX processing, voice equalizing processing, preemphasis processing (in FM mode), and microphone amplifier AGC processing.

The DSP does not perform modulation in FM mode. The DSP sends a 455kHz carrier signal from pin 1 (TIF) of CN1, adds subtone to the carrier signal, preemphasizes sounds, and limits the amplitude. Preemphasized audio data is sent from pin 33 of DSP A (IC1 : DSP56002FC40) to the digital-to-analog converter (IC34 : PCM69AU) in 1/fs intervals, and converted to an analog current. The analog current is converted to the audio signal of the analog voltage by the I-V converter IC36 : NJM4560M. IC36 also serves as the third low-pass filter that eliminates the alias components of the audio signal. The analog audio data signal is output from pin 3 (FMD) of CN3 to the PLL section.

The data modulated by the two DSPs (including FM carrier data) is sent to the gate array in the process as the demodulated signal. The signal is sent from pin 60 of the gate array to the digital to analog converter (IC16 : AK4318-VS) in 1/fs intervals, and converted to an analog signal. The frequency of this signal is fs/4. The analog modulated signal is passed through the third low-pass filter IC17 : NJM2100M to eliminate alias components. The signal is converted to the 455kHz IF signal by the mixer (IC18 : MC74HC4053F) and two ceramic filters (CF2 and CF3), and output from pin 1 (TIF) of CN1.

Monitor data, one of the DSP operation results, is sent to the gate array in the same process as the demodulate signal. Like the demodulate signal, the signal is sent from pin 68 of the gate array to the digital to analog converter (IC27 : AK4318-VS), and converted to an analog signal. The analog sidetone signal is passed through the third low-pass filter IC30 : NJM2100M and attenuated by VCA (IC31 : M51131L). The attenuation is determined by the rotational angle of MONI VOL. The flow of the signal after passing through the VCA is the same as for the demodulate signal.

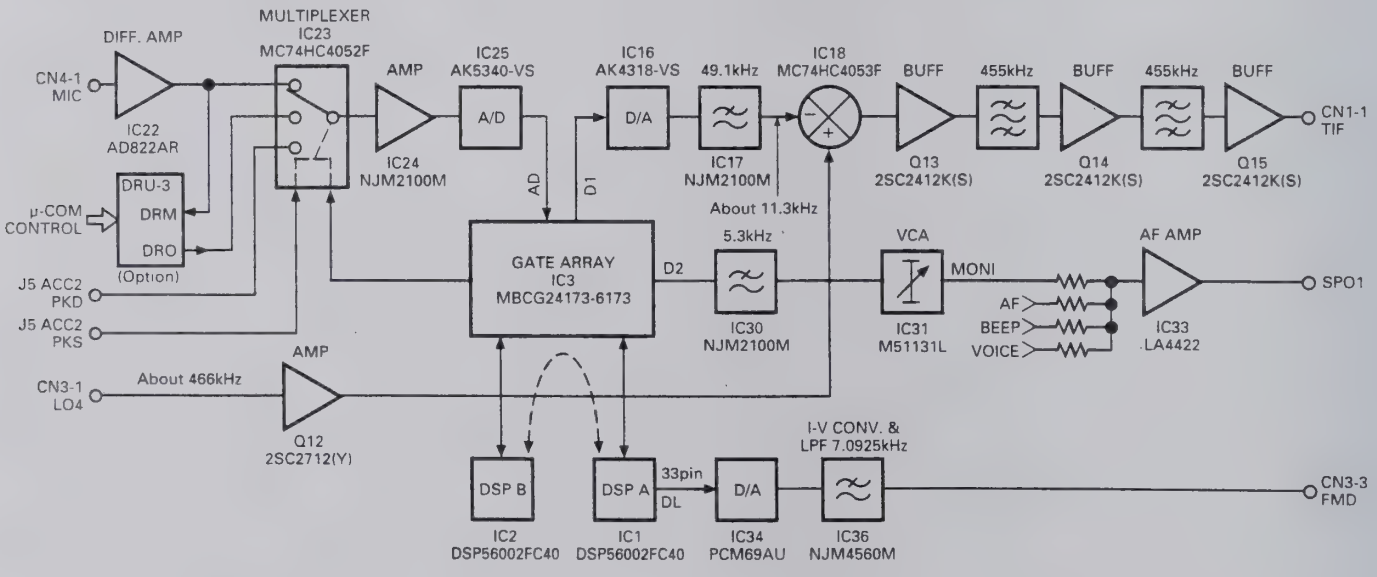

Fig. 20 Flow of transmit signal

CIRCUIT DESCRIPTION

■ Sidetone signal flow

When the electronic keyer is pressed, the sidetone is output. The sidetone is processed by DSP A. Sidetone data, a DSP A operation result, is output to the speaker or headphone in the same process as the monitor data. See Figure 21.

■ FSK tone signal flow

The flow of the FSK tone signal is the same as that of the sidetone. See Figure 21.

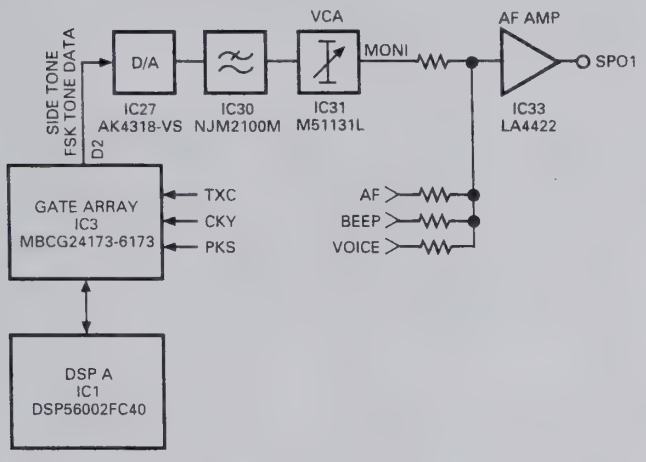

Fig. 21 Sidetone and FSK tone signal flow

■ Beep signal flow

When pin 6 (BEEP) of CN7 goes HIGH, DSP A sends beep data to the gate array in the same process as the demodulate signal. Like modulation data, the signal is sent from pin 60 of the gate array to the digital to analog converter (IC16 : AK4318-VS) in 1/fs intervals, and converted to an analog signal. The analog beep signal is passed through the primary low-pass filter IC19 : NJM4560M, and attenuated by VCA (IC29 : M51131L). The attenuation is determined by the value set on the menu. The flow of the signal after passing through the VCA is the same as for the demodulate signal.

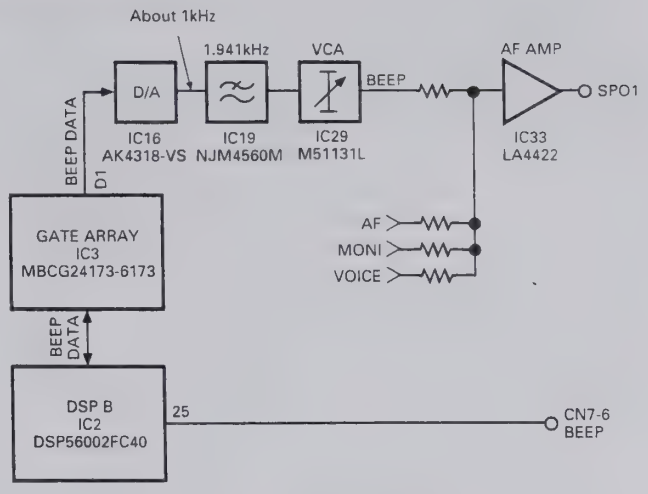

Fig. 22 Beep signal flow

■ DRU-3 recording and playback

The DRU-3 is controlled by the microprocessor in the control unit. During the DRU-3 recording, the MIC signal amplified by the differential amplifier (IC22 : AD822AR) is input to the DRU-3, and recorded. During DRU-3 playback, the playback signal is input to the analog-to-digital converter by switching the multiplexer (IC23 : MC74HC4052F). When the DSP receives a command "VOX ON and DRU playback" from the microcomputer, pin 38 of DSP B (IC2 : DSP56002FC40) goes HIGH and the SS line goes LOW. When the SS line goes LOW, the microprocessor sets the transceiver to transmit mode. This operation does not occur at the playback sound level of the DRU-3. Even if no sound is recorded, the transceiver enters the transmit mode when a DRU playback command arrives while VOX is ON. See Figure 20.

■ VS-2 audio signal flow

The audio signal output from the VS-2 is not processed by the DSP. The signal is amplified by the AF amplifier, and output to the speaker or headphone. The VS-2 is controlled by the microprocessor. See Figure 23.

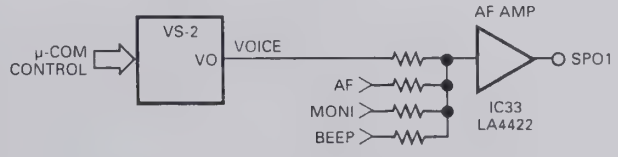

Fig. 23 VS-2 audio signal flow

CIRCUIT DESCRIPTION

■ Commands and data transferred to or from the microprocessor

To understand the DSP processing, the commands sent from the microcomputer to the DSP, and data sent from the DSP to the microcomputer are described below.

For details of error status, see the error list (Table 10).

1) Microprocessor → DSP

- Transmit mode
- Transmit filter
- CW rise (fall) time
- FSK shift width
- Squelch level
- Applicable filter follow speed
- SPAC interrelation time
- Check mode operation setting
- VOX delay time
- AGC release time
- TX AGC release time
- AGC correction
- TX equalizing
- FM modulation
- Processor compression level (LOW)
- Processor compression level (MID)
- Processor compression level (HIGH)
- RX AF AGC gain (AM/FM)
- RX AF AGC gain release time (AM/FM)
- TX AGC gain (packet input)
- Receive mode
- Receive filter
- CW pitch frequency
- FM subtone frequency
- Noise/interference elimination mode setting
- Auto notch follow speed
- Operation flag 1
- VOX gain
- RF gain (AGC)
- TX AGC gain
- AM modulation
- Carrier level
- Operation flag 2

2) DSP → Microprocessor

- S-meter data
- Compression level data
- Squelch status
- Microphone level data
- Error status
- Check mode status

Error No.	Error description
00	TX-RX unit is not connected.
01	Main DSP stack error
02	Main DSP trace error
03	Main DSP software interrupt
04	Main DSP SSI reception
05	Main DSP SSI exceptional reception
06	Main DSP SCI reception
07	Main DSP SCI exceptional reception
08	Main DSP SCI transmission
09	Main DSP SCI line idle detection
0A	Main DSP NMI
0B	Main DSP invalid command detection
0C	Command cannot be transferred from the main DSP to the sub DSP.
10	RAM check error 1
11	RAM check error 2
12	Gate array check error
21	Sub DSP stack error
22	Sub DSP trace error
23	Sub DSP software interrupt
24	Sub DSP SSI reception
25	Sub DSP SSI exceptional reception
26	Sub DSP SCI reception
27	Sub DSP SCI exceptional reception
28	Sub DSP SCI transmission
29	Sub DSP SCI line idle detection
2A	Sub DSP NMI
2B	Reserved
2C	Reserved
2D	Sub DSP invalid command detection
2E	Reserved
F0	Main DSP timeover error
F1	Sub DSP timeover error
FD	PLL unlock (TX-RX unit)
FE	PLL unlock (RF unit PLL section)
FF	Temperature protection error

Table 10 Error list

CIRCUIT DESCRIPTION

■ New function circuit

The TS-870S noise processing, auto notch, line enhancer, SPAC, and beat cancel functions are characteristics of the DSP digital signal processing. These functions and other features are described below.

1) Auto notch

The auto notch corresponds to the IF filter used in the previous models. It is an adaptive filter, and emphasizes weak signals by tracking interfering signals automatically in the AGC loop (the reception gain increases). The notch filter has very good damping and frequency characteristics in the receiving bandwidth.

2) Beat cancel

The "beat cancel" corresponds to the AF filter used in the previous models. It also is an adaptive filter, and finds and removes beat components from the received signal. Unlike the notch filter, this filter removes multiple beats, but it does not emphasize weak signals even if the beat is canceled.

3) Noise reduction

The TS-870S uses a line enhancer or SPAC to reduce noise. One of these two functions should be assigned to the N.R. key on the front panel.

The line enhancer is an adaptive filter which does not attenuate the target signal, but attenuates only noise. If the conditions are not very bad, the S/N ratio can be improved greatly.

Select SPAC to improve the S/N ratio effectively. SPAC stands for "Speech Processing System by use of Auto Correlation function." It takes the periodical signal (target reception signal) and suppresses noise using the Auto Correlation function. Since SPAC takes reception signals with a certain time width, the signals become discontinuous and cause noise.

Since the auto notch, beat cancel, and line enhancer are adaptive filters, their characteristics change according to the input signal. If the automatic tracking is set to OFF on the menu when the filter effect is good under good signal conditions, the effect does not change even if the conditions turn bad.

4) VOX

DSP processes the correlation between the received signal and signal from the microphone, and carries out the conventional anti-VOX processing. Therefore, TS-870S does not have anti-VOX.

5) SSB modulation/demodulation

TS-870S uses the PSN modulation/demodulation used for TS-950 and subsequent models. With the increase in the DSP operation precision, the side-band suppression has been improved in a very wide bandwidth from 25Hz to 6kHz (80dB or more for modulation and 90dB for demodulation). The PSN method does not eliminate all group-delay distortion because the Hilbert converter uses an IIR filter. The TS-870S uses a linear phase shifter with a Hilbert converter containing an FIR filter. As the FIR filter can keep group delay constant, it does not cause group-delay distortion. However, as the group-delay itself increases, if the linear phase shifter is set to ON via the menu, a signal is transmitted several ms after a voice enters the microphone.

■ Analog section and other circuits

The analog section and other circuits were described in the flow of transmission and reception signals. This section describes the circuits that were not explained in the flow of transmission and reception signals.

1) Reference voltage circuit

Since TS-870S does not have a negative power supply, a 2.5V reference voltage, which is half the power supply voltage, is supplied to the OP amplifier to process analog signals linearly. Fig. 24 shows this circuit. 2.5V are produced by dividing the power supply voltage by R129 and R132. This voltage is provided to the circuitry through buffer amplifier IC19 or IC20.

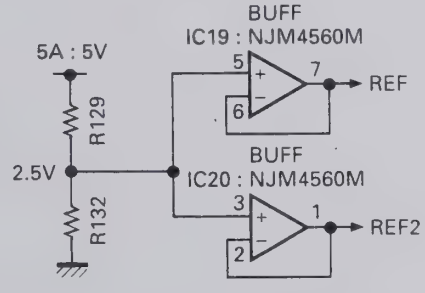

Fig. 24 Reference voltage circuit

CIRCUIT DESCRIPTION

2) Pop mute circuit

The mute circuit shown in Fig. 25 reduces the pop sound when the power is switched ON and OFF. If CN7 pin 16 AMUT is LOW, the mute circuit consisting of IC44 : TC7S04F and Q22 : DTC124EK mutes the AF amplifier (IC33 : LA4422) and suppresses the pop sound when the power is turned ON. A microprocessor controls AMUT and cancels muting at an appropriate time.

When the power is turned OFF, muting is also controlled by AMUT, but is done only if the power switch ON TS-870S is pressed. The circuit comprising Q25 : DTA143EK, Q26 : DTC124XK, and Q27 : DTC143EK suppresses the pop sound when the external power supply switch is turned OFF. When this switch is turned OFF, the voltage of the AF amplifier power supply 14A decreases. When the 14A voltage falls, Q25 becomes active (ON), and then Q26 becomes active (the collector goes LOW to mute the AF amplifier and suppress the pop sound. Q27 prevents muting when the voltage of the AF amplifier power supply 14A falls during transmission.

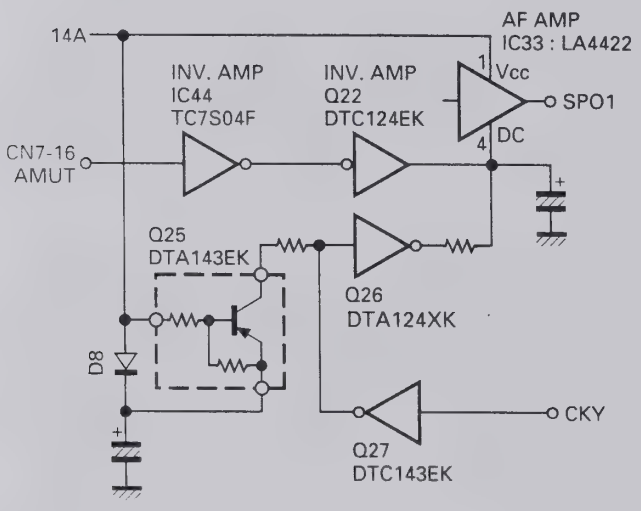

The TS-870S uses AF amplifier IC33: LA4422 pin 4 (DC) as the mute pin.

Fig. 25 Pop mute circuit

■ Transmit/receive frequency characteristics correction circuit

The transmission sound quality has a flat frequency characteristic due to DSP modulation. However, the low-frequency range is also flat to the cut-off frequency, so the model has less clarity compared to the conventional transceivers. A correction circuit is provided to suppress the low-frequency range. It consists of R141, R155, and C145 in the TX-RX unit, and it is –2dB at 300Hz for 1kHz.

To return to the flat frequency characteristic, remove C145 and replace R155 with a 1.8kΩ resistor. (See Figure 26.)

The receive frequency is also flat, as well as the hi-fi sound quality when the filter is widened. When the receive frequency is flat, the volume of the low-frequency range becomes insufficient, so a correction circuit that slightly emphasizes the low-frequency range is provided. It consists of R204, R205, R208, and C208 in the TX-RX unit, and it is +2dB at 1kHz for 3kHz.

To return to the flat frequency characteristic, remove R205. (See Figure 26.)

Transmit side

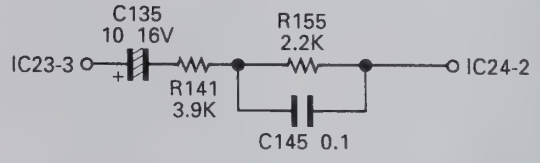

Receive side

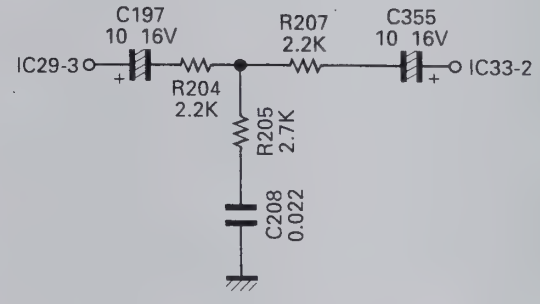

Fig. 26 Transmit/receive frequency characteristics correction circuit

DESCRIPTION OF COMPONENTS

RF UNIT (X44-3210-00) (A/9) : RF

Ref. No.	Use/Function	Operation/Condition
Q1	Switching	On when exit RX on.
Q2	Switching	On when TX.
Q3	Switching	Off when ATT1 or ATT2 on.
Q5	TX RF amplifier	Drive output (TX frequency)
Q6	Switching	DATT on
Q7	Switching	1/2 : 30kHz~490kHz 2/2 : 490kHz~1.62MHz
Q8	Switching	1/2 : 1.62MHz~2.49MHz 2/2 : 2.49MHz~3.99MHz
Q9	Switching	1/2 : 3.99MHz~6.99MHz 2/2 : 7.30MHz~10.49MHz
Q10	Switching	1/2 : 6.99MHz~7.30MHz 2/2 : 13.99MHz~14.49MHz
Q11	Switching	1/2 : 20.99MHz~21.49MHz 2/2 : 21.49MHz~30.00MHz
Q12	Switching	1/2 : 14.49MHz~20.99MHz 2/2 : 10.49MHz~13.99MHz
Q13	RF amplifier	21.49MHz~30.00MHz
Q14, 15	RF amplifier	30kHz~21.49MHz
Q16	Amplifier	LO1 : 73.08MHz~103.05MHz
Q17~20	Mixer	$f_{LO1} - f_{RF} = 73.05MHz$
Q21	Ripple filter	14S
Q22	Amplifier	73.05MHz
Q23	Mixer	73.05MHz – 64.22MHz = 8.83MHz
Q24	Amplifier/AGC	73.05MHz
Q26, 27	Mixer	73.05MHz – 64.22MHz = 8.83MHz
Q28	Amplifier	8.83MHz
Q29~31	Amplifier/AGC	8.83MHz
Q32	AGC	NB (Noise blanker)
Q33	Amplifier/AGC	8.83MHz
Q35, 36	Mixer	73.05MHz → TX f
Q37, 38	Mixer	8.83MHz → 73.05MHz
Q39	Amplifier	TX IF
Q42	Switching	RF blanking
Q43, 44	DC amplifier	ALC
Q45, 46	Switching	On when AM mode.
Q47	DC amplifier	ALC
Q48	Switching	On when AM transmission mode.
Q49	Switching	
Q50	DC amplifier	ALC amplifier
Q51	Switching	Pulse generate when AM transmission mode.
Q52	DC amplifier	ALC amplifier
Q54	Switching	Off when NB.
Q55	Switching	Make relay for linear.
Q56	Switching	On when TX.
Q57, 59	Switching	TXB generate
Q58, 60	Switching	RXB generate
Q61	Switching	On when AIP off (0~21.49MHz).
Q62	Switching	On when AIP off (21.49~30MHz).
Q63	Switching	On when AIP off.
Q64	Switching	On when AIP on.
Q65	Switching	12V when RX.
Q66	Switching	On when RX.
Q70, 71	Switching	CKY
IC1	Serial/Parallel conversion	BPF selection
IC2	Serial/Parallel conversion	
IC6	OP amplifier	ALC meter
IC7	DAC	8 ch
IC8	Meter amplifier	VSF, VSR, ALC and Processor

DESCRIPTION OF COMPONENTS

Ref. No.	Use/Function	Operation/Condition
IC9	Comparator	NB pulse
IC10	AVR	8V → 5V
D1~3	Relay surge absorption	
D4~7	Large input protection	
D8	RF switch	On when RX.
D10	RF switch	On when TX.
D11~33, 35	RF switch	BPF switch
D36, 37	RF switch	On when AIP on.
D38, 39	RF switch	ON when 21.49MHz or more RF amplifier selection.
D40, 41	RF switch	On when 21.50MHz or less RF amplifier selection.
D42	RF switch	
D43	RF switch	LO2 (64.22MHz) switch
D46	RF switch	Noise detection
D47	RF switch	TGC voltage control
D49	RF switch	Gain control
D50	Zener diode	–6.2V stability
D51	LED	Voltage generate
D52	Zener diode	12V (ALC voltage for linear)
D53	Switch	Pulse generate
D54	Reverse current prevention	
D55	Zener diode	3V (Voltage shift)
D56	Switch	ALC
D57	LED	CKY
D58	Relay surge absorption	
D59	Reverse current prevention	RBK
D60	RF switch	On when 29MHz.
D61	RF switch	On when AIP on.
D62	RF switch	On when RX.
D63, 64	RF switch	8.83MHz filter changeover (15kHz).
D65, 66	RF switch	8.83MHz filter changeover (3kHz).
D67	RF switch	8.83MHz filter changeover (6kHz).
D68	RF switch	On when TX.
D69	RF switch	8.83MHz filter changeover (6kHz).
D70	Zener diode	6.2V (Voltage shift)
D71	Zener diode	4.7V (Voltage stability)
D72	Switch	CKY

RF UNIT (X44-3210-00) (B/9) : PLL

Ref. No.	Use/Function	Operation/Condition
Q500	Buffer	D/A buffer
Q501	Amplifier	20MHz (fSTD)
Q502	Mixer IC506 input buffer	5.46~4.46MHz
Q503	Buffer	D/A buffer
Q504, 505	Switching	Chopper
Q506	Buffer	Output for chopper
Q507	Amplifier	LO3 (8.375MHz)
Q508	Buffer	For LO3 output
Q510	Buffer	D/A buffer
Q511	Buffer	For LO4 output
Q512	Amplifier	REF 20MHz
Q513	Tripled circuit	fSDT x 3 = 60MHz
Q514, 515	Buffer	Reference oscillator 20MHz
Q516	VCO A changeover	
Q517	VCO B changeover	

DESCRIPTION OF COMPONENTS

Ref. No.	Use/Function	Operation/Condition
Q518	VCO C changeover	
Q519	VCO D changeover	
Q520	VCO A	73.08~80.54MHz
Q521	VCO B	80.54~87.54MHz
Q522	VCO C	87.54~94.54MHz
Q523	VCO D	94.54~103.05MHz
Q524	Buffer	VCO A~VCO D output (73.08~103.05MHz)
Q525	Mixer IC508 input buffer	73.08~103.05MHz
Q526	Buffer	For LO1 output
Q527	Active LPF	Comparison 1MHz
Q528, 529	Active LPF	
Q530	Amplifier	PLL IC IC507 input (18~48MHz)
Q531	Amplifier	18~48MHz
Q532	Amplifier	LO2A output (64.22MHz)
Q533	Switching	PLL unlock signal output ("H" : Unlock)
Q534~536	Active LPF	Comparison 20kHz (5kHz in FM mode)
Q537	Switching	FM modulation input on/off
Q539	Buffer	For LO2A outrput
Q800	Reference oscillator	Reference frequency 20MHz oscillation.
IC500	DDS	1.46~0.46MHz for LO1
IC501	DDS	1.625MHz for LO3
IC502	DDS	For LO4
IC503	Divider	20MHz x (1/5) = 4MHz
IC505	Mixer	1.46~0.46MHz → 5.46~4.46MHz
IC506	Mixer	5.46~4.46MHz → 54.54~55.54MHz
IC507	PLL	2~5 : Frequency division ratio input 6 : 18~48MHz input 9 : Lock voltage output 11 : Unlock output (Unlock : "L") 15 : 20MHz input
IC508	Mixer	73.05~103.05 + 54.54~55.54 = 18~48MHz
IC509	PLL	2~5 : Frequency division ratio input 6 : 64.22MHz input 9 : Lock voltage output 11 : Unlock output (Unlock : "L") 15 : 20MHz input
IC510	AVR	13.8V → +9V
IC511	AVR	13.8V → +9V low drop-out
D500	Vari-cap diode	VCO A
D501	Switching	VCO A output
D502	Vari-cap diode	VCO B
D503	Switching	VCO B output
D504	Vari-cap diode	VCO C
D505	Switching	VCO C output
D506	Vari-cap diode	VCO D
D507	Switching	VCO D output
D508	Reverse current prevention	Unlock signal detection

FINAL UNIT (X45-351X-XX) (A/5) : FINAL 0-00 : K,P,M,M2,X 2-71 : E,E2,E3,E9

Ref. No.	Use/Function	Operation/Condition
Q501	Pre-drive amplifier	Wide-band amplification of HF band
Q502, 503	Drive amplifier	Push-pull wide-band amplification of HF band
Q504	Drive bias supply	Temperature compensation of drive
Q505, 506	Final amplifier	Push-pull wide-band amplification of HF band
Q507	Final bias supply	Temperature compensation of final
D501	Temperature compensation	Temperature sensing of pre-drive
D502	Temperature compensation	Temperature sensing of drive
D503	Temperature compensation	Temperature sensing of final
D504	Reverse power connection protection	

DESCRIPTION OF COMPONENTS

FINAL UNIT (X45-351X-XX) (B/5) : FILTER

Ref. No.	Use/Function	Operation/Condition
Q1~5	Relay driver	
Q6	Switch	Antenna tuner through tune
Q10~16	Relay driver	
IC1	Band data decoder	
D1	High-frequency rectification	Reflected wave rectification
D2	High-frequency rectification	Forward wave rectification
D3	Voltage stabilization	5.1V
D4	Relay surge absorption	1.6~2.0MHz LPF relay
D5	Relay surge absorption	2.0~4.0MHz LPF relay
D6	Relay surge absorption	4.0~7.5MHz LPF relay
D7	Relay surge absorption	7.5~10.5MHz LPF relay
D8	Relay surge absorption	10.5~14.5MHz LPF relay
D9	Relay surge absorption	14.5~21.5MHz LPF relay
D10	Relay surge absorption	21.5~30.0MHz LPF relay
D11	Switching	

FINAL UNIT (X45-351X-XX) (C/5) : CONNECTION

Ref. No.	Use/Function	Operation/Condition
Q401~403	DC/DC	–6V
Q404	Ripple filter	14S → 14V
Q405	Ripple filter, AVR	
Q460, 461	Mixer	RX
Q470, 471	Mixer	TX
Q472, 475	Amplifier	TX IF
IC402	5V AVR	8V → 5V (For PLL)
D401	Rectification	
D402	Current stabilization	9V
D450	Reverse current prevention	
D451~456	RF switch	BPF switch
D457	Reverse current prevention	

FINAL UNIT (X45-351X-XX) (D/5) : AVR

Ref. No.	Use/Function	Operation/Condition
Q601	Switch	14S supply when power switch on.
Q701	Switch	On when fan operation
Q702, 703	Switch	Fan motor drive
IC601	8V AVR	13.8V → 8V (Analog 8V : 8A)
IC602	8V AVR	13.8V → 8V (Digital 8V : 8D)
IC701	Comparator	Fan control
D601	Relay surge absorption	
D701	Reverse current prevention	
D702	Surge absorption	

FINAL UNIT (X45-351X-XX) (E/5) : RELAY

Ref. No.	Use/Function	Operation/Condition
D301	Lightning surge protection	ANT1
D302	Lightning surge protection	ANT2
D303	Relay surge absorption	Antenna changeover relay
D304	Relay surge absorption	TX/RX changeover relay

DESCRIPTION OF COMPONENTS

AT UNIT (X53-3340-02)

Ref. No.	Use/Function	Operation/Condition
Q1, 2	Amplifier	Waveform shaping
Q3	Switching	On when APRE is "H".
Q4, 5	Switching	Motor speed control pulse
IC1	DFF	Phase difference detection 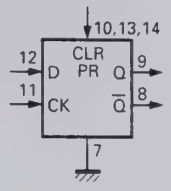 Function table: INPUTS (CLOCK, D) / OUTPUTS (Q, $\overline{Q}$): ↑ L L H; L X Qo $\overline{Qo}$
IC2	Analog switch	For control changeover motor 1 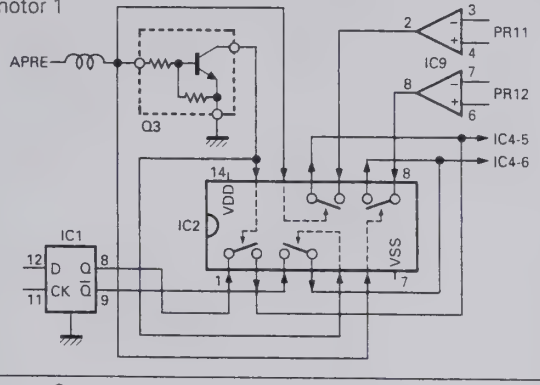
IC3	Analog switch	For control changeover motor 2 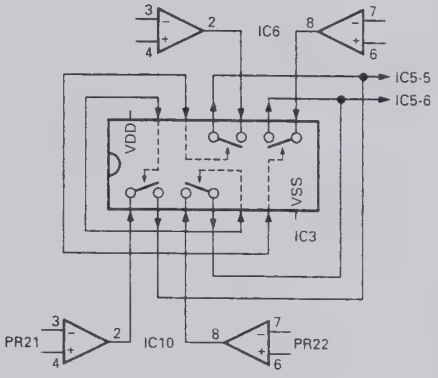
IC4	Motor drive	For motor 1 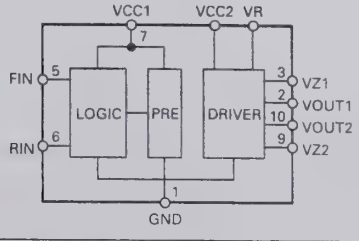
IC5	Motor drive	For motor 2
IC6	Comparator	Amplification difference detection
IC7	AVR	+5V
D1	Detector	Current component amplification detection
D2	Detector	Voltage component amplification detection
D3~8	Switching	Clipper
D10	Switching	Spike absorption
D101~103	Switching	Spike absorption
D105~108	Switching	Spike absorption
D109, 110	Switching	Band data

DESCRIPTION OF COMPONENTS

CONTROL UNIT (X53-356X-XX) (A/4) : CONTROL

0-11 : K,P 0-21 : M 0-22 : M2 0-71 : X 2-71 : E 2-72 : E2 2-73 : E3 2-74 : E9

Ref. No.	Use/Function	Operation/Condition
Q1, 2	Switching	Voltage drop changeover
Q3, 4	Switching	Multiplexer changeover
Q5	Switching	EEPROM write control changeover
Q6~11	Switching	AT control (PR11, PR12, PR21, PR22, APRE, SPED)
Q12, 13	Switching	AT-300 control and input (TS, TT)
Q14, 15	Switching	AT-300 control and output (TS, TT)
Q16	Switching	IC24 control (Reset)
Q17~19, 22	Switching	IC24 control (CH1, 2, 3, 4)
Q20, 24	Switching	IC24 control (DOT)
Q21, 23	Switching	IC24 control (DASH)
Q27	Switching	VBSY signal
Q28	Switching	KEY signal
Q29	Switching	Filter changeover (6kHz)
Q30	Switching	Filter changeover (3kHz)
Q31	Switching	Filter changeover (15kHz)
Q33	Switching	BLNK signal
IC1, 2	Regulator	5V output
IC3	Regulator	8V output
IC4	EEPROM	Adjustment data saving
IC5	Reset, Power supply changeover	System reset and Back-up power supply changeover
IC6	CPU	8 bit microcomputer (Main)
IC7, 10	Inverter	Reverse data
IC8	RAM	8K-byte
IC9, 13	Multiplexer	A/D data changeover
IC11	OR gate	RD/WR signal output
IC12	ROM	64K-byte
IC14	AND gate	Chip select combination for RAM and ROM
IC15	Bidirectional buffer	Data bus input/output changeover
IC16, 22, 23	Extended I/O	8 bit x 4, 4 bit x 1
IC17, 18	Decoder	Converts the address signal into a chip select signal for each IC.
IC19	Latch	Chip select signal latch
IC20, 21	Encoder gate array	Encoder pulse count
IC24	CPU	8 bit microcomputer (Electronic keyer)
IC25, 26	Schmitt trigger	Encoder chattering absorption
IC27	Level shift	RS-232 level shift
IC28	OP amplifier	Buffer
IC29	OR gate	CKY signal and BPC signal combination
D1~3	Protection diode	Power supply
D4	Voltage detector	Voltage drop detection (About 10V)
D5	Protection diode	Reverse current prevention
D6	Protection diode	KEYS line
D7	Protection diode	DASH line
D8	Protection diode	DOT line
D9	Protection diode	MD line
D10	Protection diode	MU line
D11	Protection diode	KEY line
D12	Protection diode	SS line

DESCRIPTION OF COMPONENTS

CONTROL UNIT (X53-356X-XX) (B/4) : SW

Ref. No.	Use/Function	Operation/Condition
Q501, 502	LED switch	
IC501~504	Serial/Parallel	Data conversion for tact switch and LED
D501, 502	LED	
D510~519	LED	

TX-RX UNIT (X57-4620-00)

Ref. No.	Use/Function	Operation/Condition
Q1	Switch	Change SS line to low when VOX active.
Q2	Amplifier	64.22MHz
Q3	Amplifier	REF 20MHz
Q4	Switch	On/Off when squelch open/close (For packet).
Q5, 7	Active LPF	
Q6	Active LPF	PLL loop filter
Q8	VCO	46.32MHz oscillation circuit
Q9, 10	VCO	Output buffer
Q12	Amplifier	LO4 466kHz
Q13, 15	Buffer	TX IF 455kHz
Q14	Amplifier	TX IF 455kHz
Q16	Buffer	Receive signal for DSP processing (11.3kHz)
Q17	Buffer	ACC2 audio output
Q22	Switch	Mute signal (Power on/off)
Q23	Buffer	RX IF 455kHz
Q25	Pulse generator	AF mute
Q26	Switch	Mute signal
Q27	Switch	Mute signal absorption (Mute inhibit when TX)
IC1	DSP A	Main DSP
IC2	DSP B	Sub DSP
IC3	Gate array	For interface
IC4	DSP ROM	Low (D0~D7) 32KB
IC5	DSP ROM	Mid (D8~D15) 32KB
IC6	DSP ROM	High (D16~D23) 32KB
IC7	DSP RAM	8K ward
IC9	PLD	Timing generator
IC15	PLL IC	46.32MHz clock generation
IC16	DAC	Rch : BEEP signal (About 1kHz) Lch : Transmission signal (11.3kHz)
IC17	Active filter	TX (fc = 49.1kHz) 3rd LPF
IC18	Mixer	RX : 455kHz → 11.3kHz TX : 11.3kHz → 455kHz
IC19	Voltage follower, Active LPF	Reference voltage buffer, BEEP LPF (fc = 1.9kHz)
IC20	Voltage follower	Reference voltage buffer
IC21	LPF, Buffer	RX IF 11.3kHz
IC22	Amplifier	Microphone amplifier, unbalanced/balanced modulation
IC23	Multiplexer	MIC, DATA, DRU-3 changeover
IC24	LPF, Buffer	TX microphone amplifier, unbalanced/balanced modulation
IC25	ADC	Rch : Reception signal Lch : Microphone input signal
IC26	DAC	VCA control
IC27	DAC	Rch : Monitor signal Lch : De-modulation signal
IC28	Active LPF	De-modulation signal (fc = 10.6kHz)
IC29	VCA (Electronic volume)	De-modulation signal, BEEP
IC30	Active LPF	Monitor signal (fc = 5.3kHz)
IC31	VCA (Electronic volume)	Packet AF, monitor
IC33	AF amplifier	Audio amplifier

DESCRIPTION OF COMPONENTS

Ref. No.	Use/Function	Operation/Condition
IC34	DAC	Rch : AGC signal Lch : FM modulation signal
IC35	I-V converter, Inverter	AGC and S-meter voltage
IC36	I-V converter, Active LPF	FM modulation signal (fc = 7.2kHz)
IC37	AVR	13.8V → Analog 5V
IC38	AVR	Digital 8V → Digital 5V
IC39	AVR	13.8V → 5V for PLL
IC40	AVR	13.8V → 8V for PLL
IC41, 42	Buffer	VCA control
IC43	Clipper amplifier	RX IF 455kHz
IC44	Inverter	Mute (Power on/off)
D1~4	Reverse current prevention	
D5	VCO bari-cap diode for DSP	64.32MHz oscillation
D7, 8	Reverse current prevention	

SEMICONDUCTOR DATA

PLL : MB86001PF (RF Unit IC507, 509, TX-RX Unit IC15)

■ Terminal connection diagram

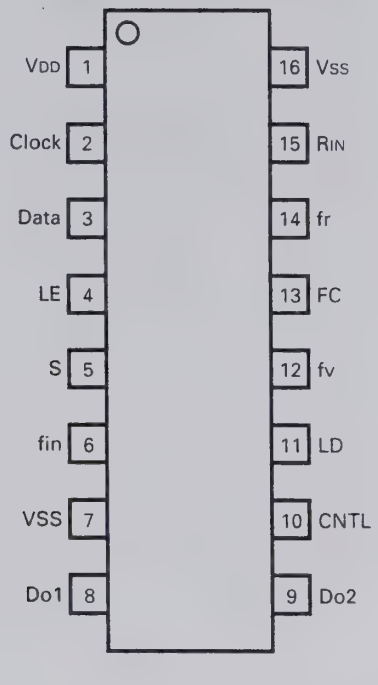

■ Terminal functions

Pin No.	Pin code	I/O	Function
1	VDD	–	Power supply pin.
2	Clock	I	Shift register clock input pin. Serial data is taken in at the rising edge of the clock signal. The input section contains a Schmitt trigger circuit.
3	Data	I	Serial data input pin for setting the divide ratio of each divider. The input section contains a Schmitt trigger circuit.
4	LE	I	Shift register load enable signal input pin. When LE is high, the divider ratio data is transferred to the latch specified by the control bit. This data is used as the divide ratio of each divider. The input section contains a Schmitt trigger circuit.
5	S	I	Switch pin for selecting the latch for setting the divide ratio of each divider. When the S pin is low, latch V1 is selected. When the S pin is high, latch V2 is selected. The divide ratio data is then sent to the divider.
6	fin	I	Divider input pin. The input section contains a bias circuit and an amplifier. Connect the voltage control oscillator (such as a VCO) by AC-coupling.
7	Vss	–	Ground pin.
8	Do1	O	Phase comparator output pin (charge pump). The Do1 output level can be reversed by FC. The reference divider output fr and divider output fv are related as follows. On when CNTL is low. fr > fv : High level (FC : Low), Low level (FC : High), fr = fv : High impedance, fr < fv : Low level (FC : Low), High level (FC : High)
9	Do2	O	Phase comparator output pin (charge pump). The relationships between the reference divider output fr and divider output fv are the same as for Do1. On when CNTL is high.
10	CNTL	I	Pin that controls charge pump outputs Do1 and Do2. The relationships between CNTL, Do1 and Do2 are as follows. When CNTL is low, Do1 : Output, Do2 : High impedance. When CNTL is high, Do1 : High impedance, Do2 : Output.
11	LD	O	Phase comparator output pin. When PLL is locked, LD is high. When PLL is unlocked, LD is low.
12	fv	O	Divider division output monitor pin. A signal is output from the pin in monitor mode. Normally, this pin has high impedance.
13	FC	I	Phase comparator input switch pin.
14	fr	O	Reference divider division output monitor pin. A signal is output from this pin in monitor mode. Normally, this pin has high impedance.
15	RIN	I	Reference divider input pin. The input section contains a bias circuit and an amplifier. Connect the reference oscillator (such as TCXO) by AC-coupling.
16	Vss	–	Ground pin.

SEMICONDUCTOR DATA

Bidirectional buffer : TC74VHC245F (COntrol Unit IC15)

■ Terminal connection diagram

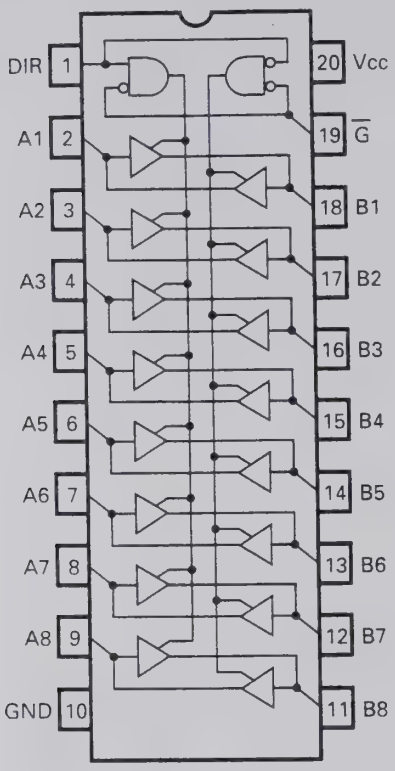

■ Logic diagram

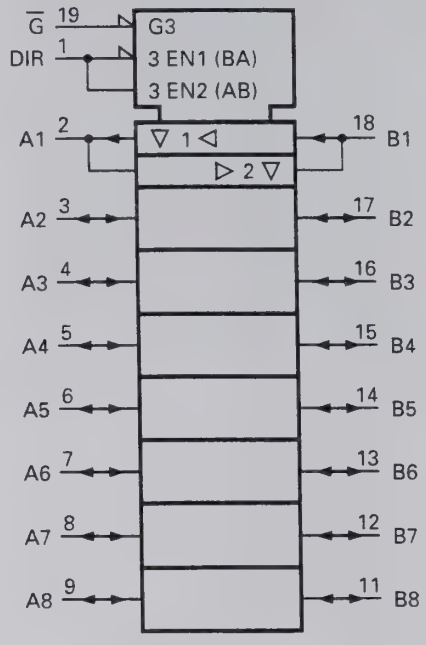

■ Truth table

Input		Function		Output
$\overline{G}$	DIR	A bus	B bus	state
L	L	Output	Input	A=B
L	H	Input	Output	B=A
H	X	High impedance		Z

X : Don't Care Z : High impedance

SEMICONDUCTOR DATA

DC/AC Converter : AK4318-VS (TX-RX Unit IC16, 27)

■ Terminal connection diagram

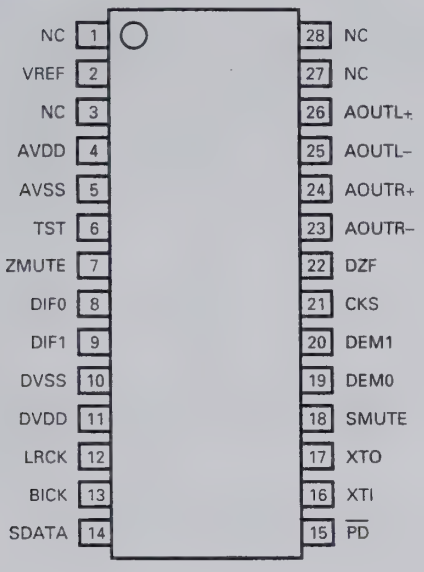

■ Block diagram

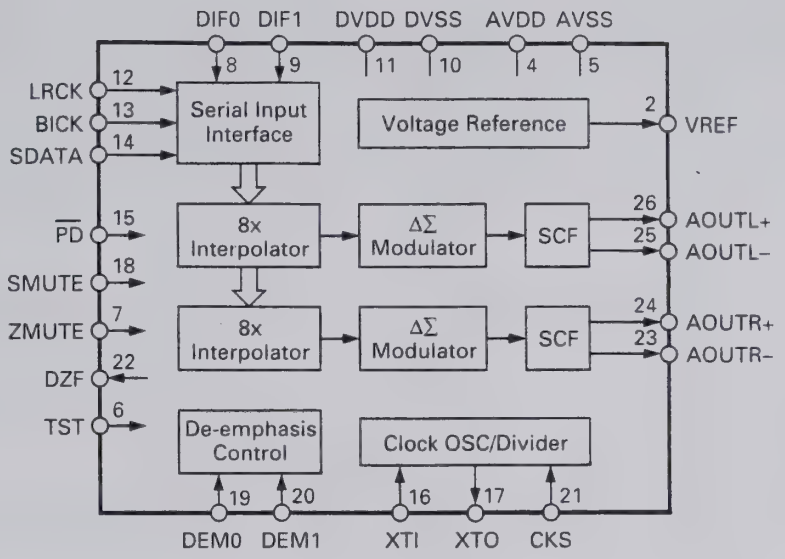

■ Terminal functions

Pin No.	Pin name	I/O	Function
1	NC	–	
2	VREF	O	Reference voltage output pin (AVDD) – 3.75V. The 10µF electrolytic capacitor and 0.1µF ceramic capacitor are connected between VREF and AVDD.
3	NC	–	
4	AVDD	–	Analog power supply pin (+5V).
5	AVSS	–	Analog ground pin.
6	TST	I	Test pin (pull down). Must be open or low.
7	ZMUTE	I	Zero mute pin (pull down). High : Detects zero and mutes output.
8, 9	DIF0, DIF1	I	Input format pin. Supports four modes.
10	DVSS	–	Digital ground pin.
11	DVDD	–	Digital power supply pin (+5V).
12	LRCK	I	L/R clock pin. Determines the input serial data channel.
13	BICK	I	Serial bit clock pin. The clock latches serial data.
14	SDATA	I	Serial data input pin. Number two's complement MSB first.
15	$\overline{PD}$	I	Reset pin. When this pin goes low, the filter and modulator are reset. Make this pin low to reset the filter and modulator when the power is turned on.
16	XTI	I	Clock input pin. Connect a crystal oscillator between XTI and XTO or input the external CMOS clock to XTI. The clock frequency can be selected with the CKS pin.
17	XTO	O	Crystal oscillator output pin. If the crystal oscillator is used, connect it between the XTO and XTI pins. If the external clock is used, open this pin.
18	SMUTE	I	Soft mute pin (pull down). High : Soft mute, Low : Cancel
19, 20	DEM0, DEM1	I	De-emphasis mode pin. Supports three frequencies.
21	CKS	I	Clock select pin. Low : CLK 256 fd, High : CLK 384 fs
22	DZF	O	Zero input detection pin. High when the data input to the SDATA pin for both channels becomes zero 8192 times consecutively.
23	AOUTR–	O	Right-channel analog negative output pin.
24	AOUTR+	O	Right-channel analog positive output pin.
25	AOUTL–	O	Left-channel analog negative output pin.
26	AOUTL+	O	Left-channel analog positive output pin.
27, 28	NC	–	

SEMICONDUCTOR DATA

AC/DC Converter : AK5340-VS (TX-RX Unit IC25)

■ Terminal connection diagram

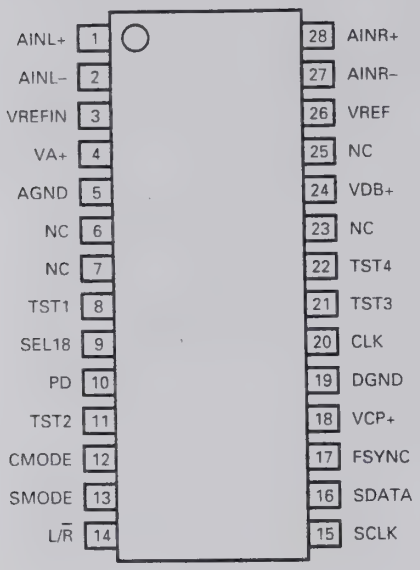

■ Block diagram

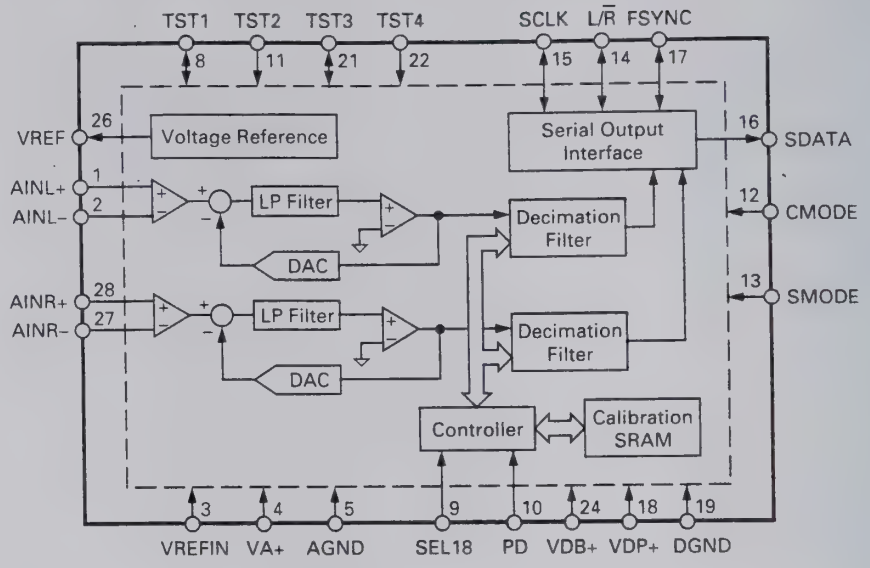

■ Terminal functions

Pin No.	Pin name	I/O	Function
1	AINL+	I	Left-channel analog non-inverted input pin.
2	AINL–	I	Left-channel analog inverted input pin.
3	VREFIN	I	Reference voltage input pin. Normally connect to the VREF pin. The input range is 1.6 times the difference between VA+ and the voltage input to this pin.
4	VA+	–	Analog section analog power supply pin (+5V).
5	AGND	–	Analog section analog ground pin.
6, 7	NC	–	
8	TST1	–	Test pin. Open or connect to DGND.
9	SEL18	I	Output data length select pin (with pull down resistor). Low : 16 bits, High : 18 bits
10	PD	I	Power down pin. High : Power down mode. Offset calibration starts at a falling edge. When the power is turned on or the clock frequency is changed, calibration must be carried out.
11	TST2	–	Test pin. Open or connect to DGND.
12	CMODE	I	Master clock select pin. Low : CLK 256 fs (12.288MHz @fs : 48kHz), High : CLK 384 fs (18.432MHz @fs : 48kHz)
13	SMODE	I	Interface clock select pin. Set the input/output of each of the L/R̄, SCLK, and FSYNC clock pins. Low : Save mode (all input pins), High : Master mode (all output pins)
14	L/R̄	I/O	Input channel select pin. Slave mode : The fs clock is input. Lch MSB data is output at a rising edge and Rch MSB data is output at a falling edge of the clock signal. Master mode : The fs clock is output. SDATA is output one clock after the L/R̄ edge. High when the power is down (PD : High).
15	SCLK	I/O	Serial data clock pin. One bit of data is output at a falling edge of the clock. Slave mode : Normally a 32 to 64 fs clock is input. Master mode : A 64 fs clock is output. Low when the power is down (PD : High).
16	SDATA	O	Serial data output pin. Data is number two's complement and the MSB is output first. Goes low after 16/18 bits are output. Low when the power is down (PD : High).
17	FSYNC	I/O	Frame synchronization clock pin. Slave mode : SDATA output is enabled when the pin is high. Master mode : The 2 fs clock is output. High when 16-bit data is output. The two low-order bits are low when 18-bit output is selected. Low when the power is down (PD : High).
18	VDP+	–	Digital section power supply pin (+5V).
19	DGND	–	Digital section ground pin.
20	CLK	I	Master clock input pin. When CMODE is high, CLK : 384 fs. When CMODE is low, CLK : 256 fs.
21, 22	TST3, TST4	–	Test pin. Open or connect to DGND.

SEMICONDUCTOR DATA

Pin No.	Pin name	I/O	Function
23	NC	–	
24	VDB+	–	Digital section power supply pin (+5V). (Silicon PCB potential)
25	NC	–	
26	VREF	O	Reference voltage output pin (VA+) – 2.6V. Output based on VA+. Normally connect this output to the VREFIN pin
27	AINR–	I	Right-channel analog inverted output pin.
28	AINR+	I	Right-channel analog non-inverted output pin.

DC/AC Converter : PCM69AU (TX-RX Unit IC34)

■ Terminal connection diagram

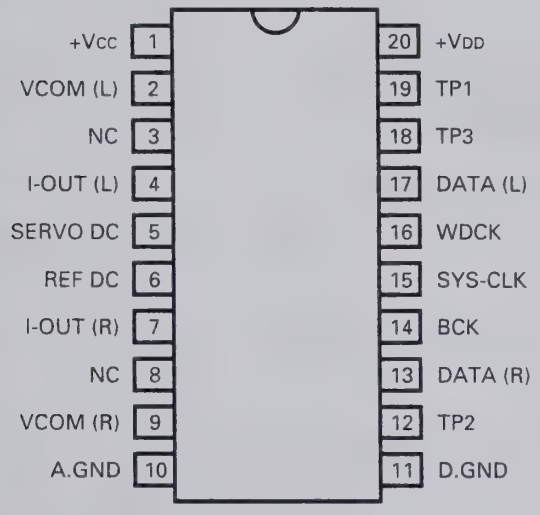

■ Terminal functions

Pin No.	Pin name	Function
1	+VCC	Analog Positive power supply
2	VCOM (L)	Lch V common
3	NC	
4	I-OUT (L)	Lch current output
5	SERVO DC	Servo filter
6	REF DC	Reference filter
7	I-OUT (R)	Rch current output
8	NC	
9	VCOM (R)	Rch V common
10	A. GND	Analog common
11	D. GND	digital common
12	TP2	Test pin 2
13	DATA (R)	Rch data input
14	BCK	Bit clock input
15	SYS-CLK	System clock input
16	WDCK	Word clock input
17	DATA (L)	Lch data input
18	TP3	Test pin 3
19	TP1	Test pin 1
20	+VDD	Digital positive power supply

PARTS LIST

CAPACITORS

CC 45 TH 1H 220 J
1 2 3 4 5 6

1 = Type ... ceramic, electrolytic, etc.
2 = Shape ... round, square, ect.
3 = Temp. coefficient
4 = Voltage rating
5 = Value
6 = Tolerance

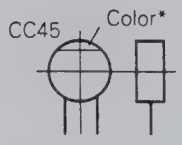

• Capacitor value

010 = 1pF
100 = 10pF
101 = 100pF
102 = 1000pF = 0.001µF
103 = 0.01µF

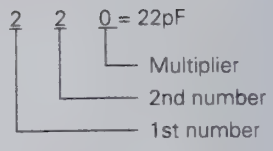

• Temperature coefficient

1st Word	C	L	P	R	S	T	U
Color*	Black	Red	Orange	Yellow	Green	Blue	Violet
ppm/°C	0	–80	–150	–220	–330	–470	–750

2nd Word	G	H	J	K	L
ppm/°C	±30	±60	±120	±250	±500

Example : CC45TH = –470 ± 60ppm/°C

• Tolerance

Code	C	D	G	J	K	M	X	Z	P	No code
(%)	±0.25	±0.5	±2	±5	±10	±20	+40 –20	+80 –20	+100 –0	More than 10µF – 10 ~ +50 Less than 4.7µF –10 ~ +75

Less than 10pF

Code	B	C	D	F	G
(pF)	±0.1	±0.25	±0.5	±1	±2

• Voltage rating

1st word \ 2nd word	A	B	C	D	E	F	G	H	J	K	V
0	1.0	1.25	1.6	2.0	2.5	3.15	4.0	5.0	6.3	8.0	–
1	10	12.5	16	20	25	31.5	40	50	63	80	35
2	100	125	160	200	250	315	400	500	630	800	–
3	1000	1250	1600	2000	2500	3150	4000	5000	6300	8000	–

• Chip capacitors (Refer to the table above except dimension)

(EX) CC 73 F SL 1H 000 J
1 2 3 4 5 6 7
(Chip) (CH, RH, UJ, SL)

(EX) CK 73 F F 1H 000 Z
1 2 3 4 5 6 7
(Chip) (B, F)

RESISTORS

• Chip resistor (Carbon)

(EX) RD 73 E B 2B 000 J
1 2 3 4 5 6 7
(Chip) (B,F)

• Carbon resistor (Normal type)

(EX) RD 14 B B 2C 000 J
1 2 3 4 5 6 7

1 = Type ... ceramic, electrolytic, etc.
2 = Shape ... round, square, ect.
3 = Dimension
4 = Temp. coefficient
5 = Voltage rating
6 = Value
7 = Tolerance

Dimension

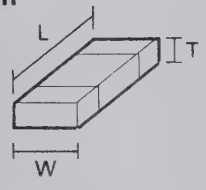

• Dimension (Chip capacitor)

Dimension code	L	W	T
Empty	5.6 ± 0.5	5.0 ± 0.5	Less than 2.0
E	3.2 ± 0.2	1.6 ± 0.2	Less than 1.25
F	2.0 ± 0.3	1.25 ± 0.2	Less than 1.25

• Dimension (Chip resistor)

Dimension code	L	W	T	Wattage
E	3.2 ± 0.2	1.6 ± 0.2	0.57	2B
F	2.0 ± 0.3	1.25 ± 0.2	0.45	2A

Rating wattage

Code	Wattage	Code	Wattage	Code	Wattage
2A	1/10W	2E	1/4W	3A	1W
2B	1/8W	2H	1/2W	3D	2W
2C	1/6W				

PARTS LIST

* New Parts. ⚠ indicates safety critical components.
Parts without **Parts No.** are not supplied.
Les articles non mentionnes dans le **Parts No.** ne sont pas fournis.
Teile ohne **Parts No.** werden nicht geliefert.

L : Scandinavia **K** : USA **P** : Canada
Y : PX (Far East, Hawaii) **T** : England **E** : Europe
Y : AAFES (Europe) **X** : Australia **M** : Other Areas

TS-870S

Ref. No.	Address	New parts	Parts No.	Description	Destination
			TS-870S		
1	1B	*	A01-2097-01	METALLIC CABINET (UPPER)	
2	3B	*	A01-2098-01	METALLIC CABINET (LOWER)	
33	3A,2D	*	A62-0382-02	PANEL ASSY	
3	2C	*	A62-0384-02	PANEL	
4	2D	*	B10-1227-03	FRONT GLASS	
5	2D	*	B11-1123-04	REFLECTOR	
6	1E	*	B38-0736-05	DISPLAY ASSY	
7	2B		B42-3343-04	S/NO LABBL	
8	3N		B42-5526-04	STICKER	K
9	2C		B43-1045-04	BADGE (KENWOOD)	
10	2C	*	B43-1101-04	BADGE (DSP)	
11	3N		B44-2163-04	UPC CORD LABEL	
12	1O		B46-0310-03	WARRNTY CARD	EE2E3E9
12	1O		B46-0410-40	WARRNTY CARD	K
12	1O		B46-0422-00	WARRNTY CARD	P
13	1O	*	B62-0542-00	INSTRUCTION MANUAL (ENGLISH)	
14	1O	*	B62-0543-00	INSTRUCTION MANUAL (SPANISH)	MM2E2E3
15	1O	*	B62-0544-00	INSTRUCTION MANUAL (NETHERLAND)	MM2E2E3
16	1O	*	B62-0545-00	INSTRUCTION MANUAL (FRENCH)	PMM2
16	1O	*	B62-0545-00	INSTRUCTION MANUAL (FRENCH)	E2E3E9
17	1O	*	B62-0546-00	INSTRUCTION MANUAL (GERMAN)	E
18	1O	*	B62-0547-00	INSTRUCTION MANUAL (ITALIAN)	E
19	2B	*	B72-0911-04	MODEL NAME PLATE	KMM2XP
19	2B	*	B72-0912-04	MODEL NAME PLATE	EE2E3E9
20	1H		E04-0167-05	RF COAXIAL CABLE RECEPTACLE (M)	
21	1N		E07-0751-05	DIN PLUG (7P) ACSY	
22	1N		E07-1351-05	DIN PLUG (13P) ACSY	
23	1H		E23-0992-04	EARTH LUG (ANT)	
24	1N	*	E30-3157-15	DC CORD ACSY	
W51	2K,3K		E31-3433-05	LEAD WIRE WITH MINIPIN PLUG	
W52	3I,4K		E37-0062-05	LEAD WIRE WITH MINIPIN PLUG	
W53	2I,4K	*	E37-0518-05	LEAD WIRE WITH MINIPIN PLUG	
W54	1I,2I	*	E37-0519-05	LEAD WIRE WITH MINIPIN PLUG	
W56	1J,2K	*	E37-0521-05	LEAD WIRE WITH MINIPIN PLUG	
W57	1I,4K	*	E37-0522-05	LEAD WIRE WITH MINIPIN PLUG	
W58	1I	*	E37-0523-05	FLAT CABLE	
W59	2I,1J	*	E37-0524-05	FLAT CABLE	
W60	2A	*	E37-0526-05	FLAT CABLE	
W61	2A	*	E37-0527-05	FLAT CABLE	
W62	3I	*	E37-0528-05	FLAT CABLE	
W63-1	4J	*	E37-0529-05	FLAT CABLE	
W63-2	3I,4I	*	E37-0529-05	FLAT CABLE	
W64	4J	*	E37-0530-05	FLAT CABLE	
W65	3I	*	E37-0531-05	FLAT CABLE	
W66	3I,4I	*	E37-0532-05	FLAT CABLE	
W67	2A	*	E37-0533-05	FLAT CABLE	
W68	2A	*	E37-0534-05	FLAT CABLE	
W69	2I,4I	*	E37-0535-05	LEAD WIRE WITH MINIPIN PLUG	
W70	2A	*	E37-0537-05	LEAD WIRE WITH CONNECTOR	
W71	1I,1J	*	E37-0538-05	LEAD WIRE WITH CONNECTOR	
W72	1I,4K	*	E37-0540-05	LEAD WIRE WITH CONNECTOR	
W73	1I,1J	*	E37-0541-15	LEAD WIRE WITH CONNECTOR	
W74	1K	*	E37-0542-05	LEAD WIRE WITH CONNECTOR	
W75	2J	*	E37-0543-05	LEAD WIRE WITH CONNECTOR	
W76	2A	*	E37-0547-15	LEAD WIRE WITH CONNECTOR (SP)	
W77	2J	*	E37-0548-05	LEAD WIRE WITH CONNECTOR	
W78	2I,4I	*	E37-0549-05	LEAD WIRE WITH CONNECTOR	
W79	2A	*	E37-0550-15	LEAD WIRE WITH CONNECTOR	
W80	2I,4J	*	E37-0551-05	LEAD WIRE WITH CONNECTOR	
W81	1I,4I	*	E37-0552-05	LEAD WIRE WITH CONNECTOR	
W82	2K,3K	*	E37-0569-05	LEAD WIRE WITH MINIPIN PLUG	
W83	–	*	E37-0570-05	LEAD WIRE WITH CONNECTOR (VS-2)	
26	1N		F05-2531-05	FUSE (25A/32V) ACSY	
27	1N		F06-4029-05	FUSE (4A/250V) ACSY	
28	2G	*	F09-0449-05	FAN MOTOR	
29	3G		F10-1206-04	SHIELDING COVER (EARTH SPRING)	
30	2B,1G		F10-1468-13	SHIELDING COVER (FINAL)	
31	1G		G02-0574-04	FLAT SPRING (AVR)	
32	2G	*	G02-0767-04	FLAT SPRING (THERMMISTOR)	
34	1A		G10-0697-04	FIBROUS SHEET (SP)	
35	1D		G10-0702-04	FIBROUS SHEET (SUB 2)	
36	1A		G10-0703-04	FIBROUS SHEET (CASE)	
39	1B		G13-0934-04	CUSHION (UPPER CASE)	
40	2G		G13-1310-04	CUSHION (FAN)	
41	4F	*	G13-1327-04	CUSHION (DRU-3)	
42	2D	*	G13-1480-04	CUSHION (KNOB)	
43	2D	*	G13-1481-04	CUSHION (KNOB)	
44	2D	*	G13-1482-04	CUSHION (KNOB)	
45	2D	*	G13-1483-04	CUSHION (KNOB)	
46	1A	*	G13-1498-04	CUSHION (SP)	
47	3B	*	G13-1511-04	CUSHION (LOWER CASE)	
50	2N	*	H10-2791-01	POLYSTYRENE FOAMED FIXTURE (F)	
51	2O	*	H10-2792-11	POLYSTYRENE FOAMED FIXTURE (R)	
52	1N	*	H13-0963-04	CARTON BOARD	
53	2O		H20-1437-03	PROTECTION COVER	
54	1N		H25-0029-04	BAG (FUSE)	
55	1N		H25-0079-04	BAG (MIC)	
56	1N		H25-0708-04	BAG (DC CORD)	
57	2O	*	H52-0730-02	ITEM CARTON CASE	
58	3O	*	H62-0641-03	OUTER PACKING CASE	
59	3B		J02-0049-14	FOOT (REAR)	
60	1A,3A		J02-0441-05	FOOT (SIDE)	
61	3A	*	J02-0474-05	FOOT (FRONT)	
62	2G		J21-4326-03	HARDWARE FIXTURE (FAN)	
63	1D	*	J21-4496-05	HARDWARE FIXTURE (PHONE JACK)	
64	2D		J31-0141-04	COLLAR (MIC)	
65	2H	*	J32-0923-04	HEXAGON BOSS	
–			J61-0307-05	BAND	
70	1B		K01-0416-05	HANDLE ASSY	
71	2C	*	K21-1102-04	KNOB (MAIN : WITH SCREW)	
72	2C	*	K29-4966-04	KNOB RING (MAIN)	
73	2D	*	K29-4967-03	KNOB (FILTER)	
74	2C	*	K29-4968-03	KNOB (M.CH,RIT : WITH SPRING)	
75	2C	*	K29-4969-03	KNOB (INSIDE)	
76	2C	*	K29-4970-03	KNOB (OUTSIDE)	
77	1C	*	K29-4978-03	KNOB (POWER)	
78	1D	*	K29-4979-03	KNOB (UP/DOWN)	

PARTS LSIT

TS-870S
RF UNIT (X44-3210-00)

Ref. No.	Address	New parts	Parts No.	Description	Destination
79	1C	*	K29-4980-03	KNOB (ANT, etc.)	
80	1D	*	K29-4981-03	KNOB (LED)	
81	1C,1D	*	K29-4982-03	KNOB (AT TUNE, etc.)	
82	1D	*	K29-4983-03	KNOB (LED)	
83	1C	*	K29-4984-03	KNOB (QUICK MEMO)	
84	1C	*	K29-4985-03	KNOB (LSB/USB)	
85	1C	*	K29-4986-03	KNOB (CW/-R)	
86	1C	*	K29-4987-03	KNOB (FSK/-R)	
87	1C	*	K29-4988-03	KNOB (FM/AM)	
88	1D	*	K29-4989-03	KNOB (AUTO NOTCH)	
89	1D	*	K29-4990-03	KNOB (BEAT CANCEL)	
90	1D	*	K29-4991-03	KNOB (N.R)	
91	1D	*	K29-4992-03	KNOB (TX EQ.)	
A	1H		N09-0372-04	SCREW (DC)	
B	1H		N09-0682-04	SCREW (GND)	
C	3F		N09-2051-05	SCREW	X
D	1H		N11-0040-46	FLANGE NUT (GND)	
E	1H		N14-0509-05	NUT (GND)	
F	1H		N15-1040-46	FLAT WASHER (GND)	
G	1D,1E		N32-2606-46	FLAT HEAD SCREW	
H	2A,3A		N32-3006-46	FLAT HEAD SCREW (SUB PANEL)	
	1B,3B		N33-3006-41	OVAL HEAD SCREW (CASE)	
J	2A,2F		N87-2606-46	BRAZIER HEAD SCREW (UNIT,RL)	
K	1A,1H		N87-3006-46	BRAZIER HEAD SCREW (AT,FAN)	
L	2G,2H		N87-3008-46	BRAZIER HEAD SCREW	
M	2B,1G		N88-2608-46	FLAT HEAD SCREW (FINAL)	
N	2D		N90-3008-46	TP HEAD MACHIN SCREW (PANEL)	
P	3A,3B		N91-3010-46	TP HEAD TAPPING SCREW (FOOT)	
SP	1A		T07-0252-15	LOUDSPEAKER (8 ohm 1W)	
MIC	1N		T91-0352-15	MICROPHONE ACSY	
93	1E		W02-1836-05	ENCODER	
BATT	2A	*	W09-0873-05	LITHIUM CELL (3V 220MAh)	

RF UNIT (X44-3210-00)

C1			CK73FB1H103K	CHIP C	0.010UF	K	
C2			CC73FCH1H121J	CHIP C	120PF	J	
C3			CK73FF1C105Z	CHIP C	1.0UF	Z	
C4 5			CK73FB1H103K	CHIP C	0.010UF	K	
C6			CK73FB1E103K	CHIP C	0.010UF	K	
C7			CK73FB1H103K	CHIP C	0.010UF	K	
C8			CK73FB1H102K	CHIP C	1000PF	K	
C10			CK73FB1H103K	CHIP C	0.010UF	K	
C14			CK73FB1E103K	CHIP C	0.010UF	K	
C15			CK73FF1C105Z	CHIP C	1.0UF	Z	
C16			CK73FF1E104Z	CHIP C	0.10UF	Z	
C17			CK73FF1C105Z	CHIP C	1.0UF	Z	
C18			CK73FB1E103K	CHIP C	0.010UF	K	
C19			CK73FB1H182K	CHIP C	1800PF	K	
C21			CK73FB1H682K	CHIP C	6800PF	K	
C22			CK73FB1H182K	CHIP C	1800PF	K	
C23			CK73FF1E104Z	CHIP C	0.10UF	Z	
C27			CK73FF1E104Z	CHIP C	0.10UF	Z	
C28			CE04EW1C100M	ELECTRO	10UF	16WV	
C29-31			CK73FF1E104Z	CHIP C	0.10UF	Z	
C32			CE04EW1C100M	ELECTRO	10UF	16WV	
C33			CK73FF1C105Z	CHIP C	1.0UF	Z	
C34			CK73FF1E104Z	CHIP C	0.10UF	Z	
C35			CC73FCH1H050C	CHIP C	5.0PF	C	
C36			CK73FB1H103K	CHIP C	0.010UF	K	
C39,40			CK73FB1E103K	CHIP C	0.010UF	K	
C47			CK73FB1H103K	CHIP C	0.010UF	K	
C48			CK73FB1H223K	CHIP C	0.022UF	K	
C49			CK73FB1H103K	CHIP C	0.010UF	K	
C50			CK73FF1E104Z	CHIP C	0.10UF	Z	
C51			CK73FF1C105Z	CHIP C	1.0UF	Z	
C52			CK73FB1H222K	CHIP C	2200PF	K	
C53			CK73FB1H682K	CHIP C	6800PF	K	
C54			CK73FB1H222K	CHIP C	2200PF	K	
C55			CK73FF1E104Z	CHIP C	0.10UF	Z	
C56			CK73FF1C105Z	CHIP C	1.0UF	Z	
C57			CK73FB1H472K	CHIP C	4700PF	K	
C58			CK73FF1E104Z	CHIP C	0.10UF	Z	
C59			CK73FF1C105Z	CHIP C	1.0UF	Z	
C60			CC73FSL1H821J	CHIP C	820PF	J	
C61			CK73FF1C105Z	CHIP C	1.0UF	Z	
C62			CK73FB1H472K	CHIP C	4700PF	K	
C63			CK73FF1E104Z	CHIP C	0.10UF	Z	
C64			CK73FB1H222K	CHIP C	2200PF	K	
C65			CK73FF1E104Z	CHIP C	0.10UF	Z	
C66			CK73FF1C105Z	CHIP C	1.0UF	Z	
C67			CK73FB1H561K	CHIP C	560PF	K	
C68			CK73FF1C105Z	CHIP C	1.0UF	Z	
C69			CK73FB1H222K	CHIP C	2200PF	K	
C70			CK73FF1E104Z	CHIP C	0.10UF	Z	
C71			CK73FB1H102K	CHIP C	1000PF	K	
C72			CK73FF1E104Z	CHIP C	0.10UF	Z	
C73			CK73FF1C105Z	CHIP C	1.0UF	Z	
C74			CC73FSL1H271J	CHIP C	270PF	J	
C75			CK73FF1C105Z	CHIP C	1.0UF	Z	
C76			CK73FB1H102K	CHIP C	1000PF	K	
C77,78			CK73FF1E104Z	CHIP C	0.10UF	Z	
C80			CK73FF1C105Z	CHIP C	1.0UF	Z	
C81			CC73FCH1H050C	CHIP C	5.0PF	C	
C83			CC73FCH1H050C	CHIP C	5.0PF	C	
C85			CC73FCH1H050C	CHIP C	5.0PF	C	
C87			CK73FF1C105Z	CHIP C	1.0UF	Z	
C88			CK73FF1E104Z	CHIP C	0.10UF	Z	
C89			CK73FB1H102K	CHIP C	1000PF	K	
C90			CK73FF1E104Z	CHIP C	0.10UF	Z	
C91			CK73FF1C105Z	CHIP C	1.0UF	Z	
C92			CC73FCH1H121J	CHIP C	120PF	J	
C93			CK73FF1C105Z	CHIP C	1.0UF	Z	
C94			CK73FB1H102K	CHIP C	1000PF	K	
C95			CK73FF1E104Z	CHIP C	0.10UF	Z	
C96			CK73FB1H102K	CHIP C	1000PF	K	
C97			CK73FF1E104Z	CHIP C	0.10UF	Z	
C98			CK73FF1C105Z	CHIP C	1.0UF	Z	
C99			CC73FCH1H820J	CHIP C	82PF	J	
C100			CK73FF1C105Z	CHIP C	1.0UF	Z	
C101			CK73FB1H102K	CHIP C	1000PF	K	
C102,103			CK73FF1E104Z	CHIP C	0.10UF	Z	
C105			CK73FF1C105Z	CHIP C	1.0UF	Z	
C106			CC73FCH1H040C	CHIP C	4.0PF	C	
C108			CC73FCH1H040C	CHIP C	4.0PF	C	
C110			CK73FF1C105Z	CHIP C	1.0UF	Z	

PARTS LIST

RF UNIT (X44-3210-00)

Ref. No.	Address	New parts	Parts No.	Description			Destination
C111			CK73FF1E104Z	CHIP C	0.10UF	Z	
C112			CC73FSL1H391J	CHIP C	390PF	J	
C113			CK73FF1E104Z	CHIP C	0.10UF	Z	
C114			CK73FF1C105Z	CHIP C	1.0UF	Z	
C115			CC73FCH1H680J	CHIP C	68PF	J	
C116			CK73FF1C105Z	CHIP C	1.0UF	Z	
C117			CC73FSL1H151J	CHIP C	150PF	J	
C118,119			CK73FF1E104Z	CHIP C	0.10UF	Z	
C121			CK73FF1C105Z	CHIP C	1.0UF	Z	
C122			CC73FCH1H050C	CHIP C	5.0PF	C	
C124			CC73FCH1H050C	CHIP C	5.0PF	C	
C126			CK73FF1C105Z	CHIP C	1.0UF	Z	
C127			CK73FF1E104Z	CHIP C	0.10UF	Z	
C128			CC73FCH1H221J	CHIP C	220PF	J	
C129			CK73FF1E104Z	CHIP C	0.10UF	Z	
C130			CK73FF1C105Z	CHIP C	1.0UF	Z	
C131			CC73FCH1H330J	CHIP C	33PF	J	
C132			CK73FF1C105Z	CHIP C	1.0UF	Z	
C133			CK73FF1E104Z	CHIP C	0.10UF	Z	
C134			CK73FB1H103K	CHIP C	0.010UF	K	
C135			CC73FCH1H121J	CHIP C	120PF	J	
C136			CK73FF1E104Z	CHIP C	0.10UF	Z	
C137			CC73FSL1H221J	CHIP C	220PF	J	
C138			CK73FB1E103K	CHIP C	0.010UF	K	
C139			CK73FF1E104Z	CHIP C	0.10UF	Z	
C140,141			CK73FB1E103K	CHIP C	0.010UF	K	
C142			CK73FF1E104Z	CHIP C	0.10UF	Z	
C143			CC73FCH1H390J	CHIP C	39PF	J	
C144,145			CK73FB1E103K	CHIP C	0.010UF	K	
C146,147			CK73FF1E104Z	CHIP C	0.10UF	Z	
C148			CK73FB1E103K	CHIP C	0.010UF	K	
C149			CK73FF1E104Z	CHIP C	0.10UF	Z	
C150,151			CK73FF1C105Z	CHIP C	1.0UF	Z	
C152,153			CK73FF1E104Z	CHIP C	0.10UF	Z	
C154			CC73FCH1H101J	CHIP C	100PF	J	
C155			CC73FCH1H150J	CHIP C	15PF	J	
C156			CK73FB1E103K	CHIP C	0.010UF	K	
C157			CC73FSL1H221J	CHIP C	220PF	J	
C158			CK73FB1H471K	CHIP C	470PF	K	
C159			CK73FB1H102K	CHIP C	1000PF	K	
C160			CC73FCH1H470J	CHIP C	47PF	J	
C161			CC73FCH1H820J	CHIP C	82PF	J	
C162			CK73FF1E104Z	CHIP C	0.10UF	Z	
C163			CK73FB1E103K	CHIP C	0.010UF	K	
C164			CC73FSL1H471J	CHIP C	470PF	J	
C165			CK73FB1E103K	CHIP C	0.010UF	K	
C166,167			CK73FF1E104Z	CHIP C	0.10UF	Z	
C168			CK73FB1E103K	CHIP C	0.010UF	K	
C169			CC73FCH1H680J	CHIP C	68PF	J	
C170			CK73FF1E104Z	CHIP C	0.10UF	Z	
C171			CC73FCH1H470J	CHIP C	47PF	J	
C172,173			CK73FB1E103K	CHIP C	0.010UF	K	
C174			CC73FSL1H471J	CHIP C	470PF	J	
C175			CC73FCH1H470J	CHIP C	47PF	J	
C176			CE04EW1C470M	ELECTRO	47UF	16WV	
C177			CC73FCH1H050C	CHIP C	5.0PF	C	
C178			CC73FCH1H680J	CHIP C	68PF	J	
C179			CK73FF1E104Z	CHIP C	0.10UF	Z	
C180			CC73FCH1H020C	CHIP C	2.0PF	C	

Ref. No.	Address	New parts	Parts No.	Description			Destination
C181			CC73FCH1H050C	CHIP C	5.0PF	C	
C182			CK73FB1E103K	CHIP C	0.010UF	K	
C184			CC73FCH1H050C	CHIP C	5.0PF	C	
C185			CC73FCH1H220J	CHIP C	22PF	J	
C186			CC73FCH1H050C	CHIP C	5.0PF	C	
C187			CC73FCH1H1R5C	CHIP C	1.5PF	C	
C188			CC73FCH1H220J	CHIP C	22PF	J	
C189			CC73FCH1H0R5C	CHIP C	0.5PF	C	
C190			CK73FB1E103K	CHIP C	0.010UF	K	
C191			CC73FSL1H681J	CHIP C	680PF	J	
C192,193			CK73FB1H102K	CHIP C	1000PF	K	
C194			CC73FSL1H331J	CHIP C	330PF	J	
C195			CC73FSL1H471J	CHIP C	470PF	J	
C196			CK73FB1H102K	CHIP C	1000PF	K	
C197			CK73FB1E103K	CHIP C	0.010UF	K	
C198			CC73FCH1H020C	CHIP C	2.0PF	C	
C199			CK73FB1E103K	CHIP C	0.010UF	K	
C201-206			CK73FB1E103K	CHIP C	0.010UF	K	
C207			CC73FCH1H470J	CHIP C	47PF	J	
C208			CK73FF1E104Z	CHIP C	0.10UF	Z	
C209			CK73FB1H102K	CHIP C	1000PF	K	
C211,212			CK73FF1E104Z	CHIP C	0.10UF	Z	
C214			CK73FB1E103K	CHIP C	0.010UF	K	
C215			CK73FF1E104Z	CHIP C	0.10UF	Z	
C216			CE04EW1C100M	ELECTRO	10UF	16WV	
C217			CK73FF1E104Z	CHIP C	0.10UF	Z	
C218			CC73FCH1H470J	CHIP C	47PF	J	
C219			CK73FF1E104Z	CHIP C	0.10UF	Z	
C220			CE04EW1H010M	ELECTRO	1.0UF	50WV	
C221-223			CK73FF1E104Z	CHIP C	0.10UF	Z	
C224			CK73FB1E103K	CHIP C	0.010UF	K	
C225			CK73FB1H102K	CHIP C	1000PF	K	
C226-228			CK73FB1E103K	CHIP C	0.010UF	K	
C229			CC73FCH1H050C	CHIP C	5.0PF	C	
C230			CK73FB1E103K	CHIP C	0.010UF	K	
C231			CC73FCH1H220J	CHIP C	22PF	J	
C232			CK73FF1E104Z	CHIP C	0.10UF	Z	
C233			CK73FB1H102K	CHIP C	1000PF	K	
C234			CK73FF1E104Z	CHIP C	0.10UF	Z	
C236			CK73FB1E103K	CHIP C	0.010UF	K	
C237			CC73FCH1H220J	CHIP C	22PF	J	
C238			CK73FB1E103K	CHIP C	0.010UF	K	
C239			CK73FB1H471K	CHIP C	470PF	K	
C240,241			CK73FB1E103K	CHIP C	0.010UF	K	
C242			CC73FSL1H471J	CHIP C	470PF	J	
C243,244			CK73FB1E103K	CHIP C	0.010UF	K	
C245			CC73FSL1H471J	CHIP C	470PF	J	
C246			CC73FCH1H010C	CHIP C	1.0PF	C	
C247			CC73FSL1H471J	CHIP C	470PF	J	
C248			CK73FB1E103K	CHIP C	0.010UF	K	
C249			CC73FCH1H0R5C	CHIP C	0.5PF	C	
C250			CC73FCH1H010C	CHIP C	1.0PF	C	
C251-253			CK73FB1E103K	CHIP C	0.010UF	K	
C254			CK73FF1E104Z	CHIP C	0.10UF	Z	
C256,257			CK73FB1E103K	CHIP C	0.010UF	K	
C260			CK73FB1E103K	CHIP C	0.010UF	K	
C262,263			CK73FB1E103K	CHIP C	0.010UF	K	
C265-273			CK73FB1E103K	CHIP C	0.010UF	K	
C274			CC73FCH1H180J	CHIP C	18PF	J	

PARTS LSIT

RF UNIT (X44-3210-00)

Ref. No.	Address	New parts	Parts No.	Description			Destination
C275			CC73FCH1H150J	CHIP C	15PF	J	
C276			CC73FCH1H180J	CHIP C	18PF	J	
C277-279			CK73FB1E103K	CHIP C	0.010UF	K	
C280			CC73FCH1H101J	CHIP C	100PF	J	
C281,282			CC73FCH1H220J	CHIP C	22PF	J	
C283			CC73FCH1H330J	CHIP C	33PF	J	
C285			CK73FB1E223K	CHIP C	0.022UF	K	
C286			CE04EW1H010M	ELECTRO	1.0UF	50WV	
C287			CE04EW1C100M	ELECTRO	10UF	16WV	
C288			CK73FB1H473K	CHIP C	0.047UF	K	
C289			CE04EW1C100M	ELECTRO	10UF	16WV	
C290			CK73FB1E103K	CHIP C	0.010UF	K	
C291			CE04EW1HR47M	ELECTRO	0.47UF	50WV	
C292			CK73FB1E103K	CHIP C	0.010UF	K	
C293			CC73FCH1H101J	CHIP C	100PF	J	
C294			CK73FF1E104Z	CHIP C	0.10UF	Z	
C295-298			CK73FB1E103K	CHIP C	0.010UF	K	
C299,300			CK73FB1H103K	CHIP C	0.010UF	K	
C301			CK73FB1H102K	CHIP C	1000PF	K	
C302			CK73FB1H103K	CHIP C	0.010UF	K	
C303			CK73FB1H102K	CHIP C	1000PF	K	
C304			CK45FE2H222P	CERAMIC	2200PF	P	
C305			CK73FB1H103K	CHIP C	0.010UF	K	
C306,307			CK73FB1H102K	CHIP C	1000PF	K	
C308			CK73FB1H103K	CHIP C	0.010UF	K	
C310			CK73FB1H103K	CHIP C	0.010UF	K	
C312			CE04EW1C100M	ELECTRO	10UF	16WV	
C313,314			CK73FB1H103K	CHIP C	0.010UF	K	
C315			CE04EW1C100M	ELECTRO	10UF	16WV	
C316-327			CK73FB1H102K	CHIP C	1000PF	K	
C328-331			CK73FB1E103K	CHIP C	0.010UF	K	
C332			CK73FB1H102K	CHIP C	1000PF	K	
C333			CK73FB1E103K	CHIP C	0.010UF	K	
C334			CC73FCH1H330J	CHIP C	33PF	J	
C335			CK73FB1E103K	CHIP C	0.010UF	K	
C338			CC73FSL1H221J	CHIP C	220PF	J	
C339,340			CC73FCH1H220J	CHIP C	22PF	J	
C341-346			CK73FB1E103K	CHIP C	0.010UF	K	
C347,348			CC73FCH1H100D	CHIP C	10PF	D	
C350			C92-0004-05	CHIP-TAN	1.0UF	16WV	
C500			CK73FB1E103K	CHIP C	0.010UF	K	
C501			CE04NW1C100M	ELECTRO	10UF	16WV	
C502			CK73FB1E103K	CHIP C	0.010UF	K	
C503			CE04NW1C100M	ELECTRO	10UF	16WV	
C504			CK73FB1E103K	CHIP C	0.010UF	K	
C505			CE04EW1C100M	ELECTRO	10UF	16WV	
C506			CK73FB1E103K	CHIP C	0.010UF	K	
C507			CE04NW1C100M	ELECTRO	10UF	16WV	
C508			CK73FB1E103K	CHIP C	0.010UF	K	
C509			CE04NW1C100M	ELECTRO	10UF	16WV	
C510			CK73FB1E103K	CHIP C	0.010UF	K	
C511			CE04EW1C100M	ELECTRO	10UF	16WV	
C512,513			CK73FB1E103K	CHIP C	0.010UF	K	
C514			C92-0516-05	CHIP-TAN	4.7UF	16WV	
C515			CC73FSL1H271J	CHIP C	270PF	J	
C516			CC73FSL1H561J	CHIP C	560PF	J	
C517			CK73FB1E103K	CHIP C	0.010UF	K	
C518			CC73FSL1H271J	CHIP C	270PF	J	
C519,520			CK73FB1E103K	CHIP C	0.010UF	K	

Ref. No.	Address	New parts	Parts No.	Description			Destination
C521			CE04EW1C100M	ELECTRO	10UF	16WV	
C522			CK73FB1E103K	CHIP C	0.010UF	K	
C523			CC73FCH1H121J	CHIP C	120PF	J	
C524			CC73FSL1H181J	CHIP C	180PF	J	
C525			CC73FCH1H121J	CHIP C	120PF	J	
C526-530			CK73FB1E103K	CHIP C	0.010UF	K	
C531			CC73FCH1H560J	CHIP C	56PF	J	
C532			CC73FSL1H391J	CHIP C	390PF	J	
C533			CC73FCH1H390J	CHIP C	39PF	J	
C534			CC73FCH1H680J	CHIP C	68PF	J	
C535			CC73FCH1H390J	CHIP C	39PF	J	
C536			CC73FCH1H101J	CHIP C	100PF	J	
C537			CC73FCH1H680J	CHIP C	68PF	J	
C538			CC73FCH1H390J	CHIP C	39PF	J	
C539			CC73FCH1H070D	CHIP C	7.0PF	D	
C540			CC73FCH1H680J	CHIP C	68PF	J	
C541			CC73FCH1H220J	CHIP C	22PF	J	
C542			CC73FCH1H330J	CHIP C	33PF	J	
C543-545			CK73FB1E103K	CHIP C	0.010UF	K	
C546			CC73FCH1H121J	CHIP C	120PF	J	
C547			CE04EW1C470M	ELECTRO	47UF	16WV	
C548-555			CK73FB1E103K	CHIP C	0.010UF	K	
C556			CK73FB1H102K	CHIP C	1000PF	K	
C557			CC73FCH1H330J	CHIP C	33PF	J	
C558			CC73FCH1H0R5C	CHIP C	0.5PF	C	
C560			CC73FCH1H0R5C	CHIP C	0.5PF	C	
C561			CC73FCH1H330J	CHIP C	33PF	J	
C562-564			CK73FB1E103K	CHIP C	0.010UF	K	
C565			C92-0516-05	CHIP-TAN	4.7UF	16WV	
C566,567			CC73FCH1H470J	CHIP C	47PF	J	
C568			CC73FCH1H101J	CHIP C	100PF	J	
C569			CE04EW1C100M	ELECTRO	10UF	16WV	
C570,571			CK73FB1E103K	CHIP C	0.010UF	K	
C572			CC73FCH1H100D	CHIP C	10PF	D	
C573			CC73FCH1H050C	CHIP C	5.0PF	C	
C574-576			CK73FB1E103K	CHIP C	0.010UF	K	
C577			CK73FB1H331K	CHIP C	330PF	K	
C578			CC73FCH1H620J	CHIP C	62PF	J	
C579			CK73FB1H331K	CHIP C	330PF	K	
C581			CC73FCH1H820J	CHIP C	82PF	J	
C583			CK73FB1H103K	CHIP C	0.010UF	K	
C584			CE04EW1C100M	ELECTRO	10UF	16WV	
C585			CK73FB1H103K	CHIP C	0.010UF	K	
C586			CK73FB1H682K	CHIP C	6800PF	K	
C587			CK73FB1H123K	CHIP C	0.012UF	K	
C588			CK73FB1H682K	CHIP C	6800PF	K	
C591			CK73FB1H103K	CHIP C	0.010UF	K	
C593			CK73FB1H102K	CHIP C	1000PF	K	
C594			CC73FSL1H221J	CHIP C	220PF	J	
C595			CK73FB1H103K	CHIP C	0.010UF	K	
C596			CC73FCH1H0R5C	CHIP C	0.5PF	C	
C597			CC73FCH1H270J	CHIP C	27PF	J	
C598-602			CK73FB1H103K	CHIP C	0.010UF	K	
C603			CK73FB1H102K	CHIP C	1000PF	K	
C604			CK73FB1H103K	CHIP C	0.010UF	K	
C606			CC73FCH1H270J	CHIP C	27PF	J	
C618			CE04EW1C101M	ELECTRO	100UF	16WV	
C619			C92-0001-05	CHIP-TAN	0.10UF	35WV	
C620-623			CK73FB1H102K	CHIP C	1000PF	K	

PARTS LIST

RF UNIT (X44-3210-00)

Ref. No.	Address	New parts	Parts No.	Description	Destination
C624			CK73FB1E103K	CHIP C 0.010UF K	
C625-628			CK73FB1H102K	CHIP C 1000PF K	
C629			CE04EW1C101M	ELECTRO 100UF 16WV	
C630,631			CK73FB1E103K	CHIP C 0.010UF K	
C630,631			CK73FB1E103K	CHIP C 0.010UF K	
C632			CE04EW1C101M	ELECTRO 100UF 16WV	
C633			CC73FCH1H101J	CHIP C 100PF J	
C634			CC73FCH1H180J	CHIP C 18PF J	
C635			CK73FB1H102K	CHIP C 1000PF K	
C636			CC73FCH1H330J	CHIP C 33PF J	
C637			CC73FCH1H080D	CHIP C 8.0PF D	
C638			CC73FCH1H120J	CHIP C 12PF J	
C639			CC73FCH1H560J	CHIP C 56PF J	
C640			CK73FB1H183K	CHIP C 0.018UF K	
C641			CC73FCH1H120J	CHIP C 12PF J	
C642			CK73FB1H102K	CHIP C 1000PF K	
C643			CC73FCH1H330J	CHIP C 33PF J	
C644			CC73FCH1H120J	CHIP C 12PF J	
C645			CC73FCH1H150J	CHIP C 15PF J	
C646			CC73FCH1H390J	CHIP C 39PF J	
C647			CC73FCH1H100D	CHIP C 10PF D	
C648			CK73FB1H102K	CHIP C 1000PF K	
C649			CC73FCH1H160J	CHIP C 16PF J	
C650			CC73FCH1H240J	CHIP C 24PF J	
C651			CC73FCH1H150J	CHIP C 15PF J	
C652			CC73FCH1H390J	CHIP C 39PF J	
C653			CK73FB1H183K	CHIP C 0.018UF K	
C654			CC73FCH1H040C	CHIP C 4.0PF C	
C655			CK73FB1H102K	CHIP C 1000PF K	
C656			CC73FCH1H150J	CHIP C 15PF J	
C657			CC73FCH1H200J	CHIP C 20PF J	
C658			CC73FCH1H160J	CHIP C 16PF J	
C659,660			CK73FB1H102K	CHIP C 1000PF K	
C661			CC73FCH1H100D	CHIP C 10PF D	
C662			CC73FCH1H030C	CHIP C 3.0PF C	
C663			CC73FCH1H020C	CHIP C 2.0PF C	
C664			CC73FCH1H040C	CHIP C 4.0PF C	
C665,666			CK73FB1H102K	CHIP C 1000PF K	
C667			CK73FB1E103K	CHIP C 0.010UF K	
C668			CK73FB1H102K	CHIP C 1000PF K	
C669			CK73FB1E103K	CHIP C 0.010UF K	
C670			CK73FB1H102K	CHIP C 1000PF K	
C671			CC73FCH1H240J	CHIP C 24PF J	
C672			CK73FB1H102K	CHIP C 1000PF K	
C673			CC73FCH1H010C	CHIP C 1.0PF C	
C674			CC73FCH1H240J	CHIP C 24PF J	
C675			CK73FB1E103K	CHIP C 0.010UF K	
C676			C92-0004-05	CHIP-TAN 1.0UF 16WV	
C677			CE04EW1C221M	ELECTRO 220UF 16WV	
C678			CK73FB1E103K	CHIP C 0.010UF K	
C679			CQ92M1H822K	MYLAR 8200PF K	
C680			C91-1083-05	FILM 0.47UF 63WV	
C681			CK73FB1H102K	CHIP C 1000PF K	
C682,683			CK73FB1E103K	CHIP C 0.010UF K	
C684			CK73FB1H103K	CHIP C 0.010UF K	
C685,686			CK73FB1E103K	CHIP C 0.010UF K	
C687			CC73FCH1H020C	CHIP C 2.0PF C	
C688			CC73FCH1H1R5C	CHIP C 1.5PF C	
C689			CC73FCH1H030C	CHIP C 3.0PF C	

Ref. No.	Address	New parts	Parts No.	Description	Destination
C690			CC73FCH1H470J	CHIP C 47PF J	
C691			CC73FCH1H270J	CHIP C 27PF J	
C692-696			CK73FB1E103K	CHIP C 0.010UF K	
C697			CE04EW1C100M	ELECTRO 10UF 16WV	
C698			CK73FB1H102K	CHIP C 1000PF K	
C699			CK73FB1E103K	CHIP C 0.010UF K	
C700			CK73FB1H102K	CHIP C 1000PF K	
C701			CC73FCH1H330J	CHIP C 33PF J	
C702			CC73FCH1H100D	CHIP C 10PF D	
C703			CC73FCH1H680J	CHIP C 68PF J	
C704,705			CK73FB1H103K	CHIP C 0.010UF K	
C706			CE04EW1C470M	ELECTRO 47UF 16WV	
C707			CK73FB1H103K	CHIP C 0.010UF K	
C708			CE04EW1C101M	ELECTRO 100UF 16WV	
C710			CK73FB1H102K	CHIP C 1000PF K	
C711			CQ92M1H333K	MYLAR 0.033UF K	
C712			C91-1083-05	FILM 0.47UF 63WV	
C713			CK73FB1H103K	CHIP C 0.010UF K	
C714			C92-0516-05	CHIP-TAN 4.7UF 16WV	
C715,716			CK73FB1H102K	CHIP C 1000PF K	
C717			CE04EW1C101M	ELECTRO 100UF 16WV	
C719			CC73FCH1H020C	CHIP C 2.0PF C	
C721-726			CC73FCH1H270J	CHIP C 27PF J	
C727,728			CC73FCH1H100D	CHIP C 10PF D	
C729			CC73FCH1H020C	CHIP C 2.0PF C	
C730-732			CK73FB1H102K	CHIP C 1000PF K	
C744			CK73FB1H102K	CHIP C 1000PF K	
C750-757			CC73FCH1H101J	CHIP C 100PF J	
C758-761			CK73FB1H102K	CHIP C 1000PF K	
C762			CC73FCH1H101J	CHIP C 100PF J	
C770			CE04EW1C470M	ELECTRO 47UF 16WV	
C771			CK73FB1H103K	CHIP C 0.010UF K	
C780			CE04EW1E470M	ELECTRO 47UF 25WV	
C781,782			CK73FF1E104Z	CHIP C 0.10UF Z	
C783			CE04EW1C470M	ELECTRO 47UF 16WV	
C784			CE04EW1E470M	ELECTRO 47UF 25WV	
C785,786			CK73FF1E104Z	CHIP C 0.10UF Z	
C787			CE04EW1C470M	ELECTRO 47UF 16WV	
C800			CC73FCH1H390J	CHIP C 39PF J	
C801			CC73FCH1H151J	CHIP C 150PF J	
C802			CC73FCH1H390J	CHIP C 39PF J	
C803			CC73FCH1H050C	CHIP C 5.0PF C	
C804			CK73FB1H103K	CHIP C 0.010UF K	
C805			CC73FCH1H020C	CHIP C 2.0PF C	
C806,807			CK73FB1H103K	CHIP C 0.010UF K	
C808			C92-0004-05	CHIP-TAN 1.0UF 16WV	
C907-912			CK73FB1H102K	CHIP C 1000PF K	
C914-926			CK73FB1H102K	CHIP C 1000PF K	
TC506,507			C05-0377-05	TRIMMER CAPACITOR 10PF	
TC508,509			C05-0376-05	TRIMMER CAPACITOR 6PF	
TC800			C05-0344-05	TRIMMER CAPACITOR 30PF	
CN2			E04-0154-05	RF COAXIAL CABLE SOCKET	
CN4			E04-0154-05	RF COAXIAL CABLE SOCKET	
CN5,6			E04-0191-05	RF COAXIAL CABLE SOCKET	
CN7			E40-3238-05	PIN CONNECTOR (3P)	
CN10			E04-0154-05	RF COAXIAL CABLE SOCKET	
CN13		*	E40-5741-05	PIN CONNECTOR (8P)	
CN14		*	E40-5740-05	PIN CONNECTOR (20P)	

PARTS LSIT

RF UNIT (X44-3210-00)

Ref. No.	Address	New parts	Parts No.	Description	Destination
CN15-17			E04-0154-05	RF COAXIAL CABLE SOCKET	
CN500		*	E40-5740-05	PIN CONNECTOR (20P)	
CN501			E40-3237-05	PIN CONNECTOR (2P)	
CN502-505			E04-0154-05	RF COAXIAL CABLE SOCKET (2P)	
CN506			E40-3238-05	PIN CONNECTOR (3P)	
CN508			E40-5606-05	PIN CONNECTOR (3P)	
CN509			E40-5607-05	PIN CONNECTOR (4P)	
CN510			E23-0996-05	TERMINAL (TEST)	
CN800			E40-4463-05	PIN CONNECTOR	
CN801			E40-4464-05	PIN CONNECTOR	
CN901			E40-3300-05	PIN CONNECTOR (3P)	
CN903-907		*	E40-5743-05	FLAT CABLE CONNECTOR (6P)	
J1			E06-0752-05	DIN SOCKET	
J2,3			E13-0166-05	PIN JACK	
J901		*	E11-0462-05	PHONE JACK	
W1		*	E37-0546-05	LEAD WIRE WITH CONNECTOR	
W2		*	E37-0517-05	LEAD WIRE WITH MINIPIN PLUG	
101	2F		F11-1141-04	SHIELDING COVER	
A502	2F		F11-1140-04	SHIELDING CASE	
-			J30-0545-05	SPACER (TO XF1)	
-			J30-0563-05	SPACER (TO XF3, X800)	
CF500,501			L72-0343-05	CERAMIC FILTER (8.4MHZ)	
L1		*	L39-1254-05	COIL	
L2			L19-0324-05	TROIDAL COIL	
L3			L40-1021-14	SMALL FIXED INDUCTOR	
L7			L40-2701-14	SMALL FIXED INDUCTOR	
L8			L40-4791-14	SMALL FIXED INDUCTOR	
L9			L40-2701-14	SMALL FIXED INDUCTOR	
L10			L40-1015-48	SMALL FIXED INDUCTOR (100UH)	
L11			L19-0324-05	TROIDAL COIL	
L12			L40-1005-48	SMALL FIXED INDUCTOR (10UH)	
L13			L40-4705-48	SMALL FIXED INDUCTOR (47UH)	
L14,15			L40-1501-14	SMALL FIXED INDUCTOR	
L16			L40-1021-14	SMALL FIXED INDUCTOR	
L17,18			L40-5691-14	SMALL FIXED INDUCTOR	
L19			L40-1292-14	SMALL FIXED INDUCTOR	
L20			L40-8291-14	SMALL FIXED INDUCTOR	
L21,22			L40-1292-14	SMALL FIXED INDUCTOR	
L23			L40-5691-14	SMALL FIXED INDUCTOR	
L24			L40-1292-14	SMALL FIXED INDUCTOR	
L25			L40-1092-14	SMALL FIXED INDUCTOR	
L26			L40-3391-14	SMALL FIXED INDUCTOR	
L27			L40-1092-14	SMALL FIXED INDUCTOR	
L28-31			L34-4262-05	COIL	
L32			L40-3382-14	SMALL FIXED INDUCTOR	
L33			L40-2792-14	SMALL FIXED INDUCTOR	
L34			L40-3382-14	SMALL FIXED INDUCTOR	
L35			L40-2282-14	SMALL FIXED INDUCTOR	
L36			L40-2292-14	SMALL FIXED INDUCTOR	
L37			L40-2282-14	SMALL FIXED INDUCTOR	
L38-40			L34-4289-05	COIL	
L41			L40-2282-14	SMALL FIXED INDUCTOR	
L42			L40-1292-14	SMALL FIXED INDUCTOR	
L43			L40-2282-14	SMALL FIXED INDUCTOR	
L44-46		*	L34-4392-05	COIL	
L47			L40-2282-14	SMALL FIXED INDUCTOR	
L48			L40-1292-14	SMALL FIXED INDUCTOR	
L49			L40-2282-14	SMALL FIXED INDUCTOR	
L50			L34-4264-05	COIL	
L51			L40-1021-14	SMALL FIXED INDUCTOR	
L52			L34-4265-05	COIL	
L53			L19-0324-05	TROIDAL COIL	
L54			L40-4785-48	SMALL FIXED INDUCTOR (470NH)	
L55			L19-0324-05	TROIDAL COIL	
L56			L40-4705-48	SMALL FIXED INDUCTOR (47UH)	
L57			L40-2785-48	SMALL FIXED INDUCTOR (270NH)	
L58			L40-2285-48	SMALL FIXED INDUCTOR (220NH)	
L59			L19-0324-05	TROIDAL COIL	
L60			L39-1255-05	COIL	
L61			L40-1285-48	SMALL FIXED INDUCTOR (120NH)	
L62			L39-1255-05	COIL	
L63			L40-1015-48	SMALL FIXED INDUCTOR (100NH)	
L64			L39-1255-05	COIL	
L65			L34-4222-05	COIL	
L67		*	L34-4394-05	COIL	
L68			L40-1015-48	SMALL FIXED INDUCTOR (100UH)	
L69			L40-2285-48	SMALL FIXED INDUCTOR (220NH)	
L70		*	L34-4393-05	COIL	
L71			L40-3395-48	SMALL FIXED INDUCTOR (3.3UH)	
L72		*	L34-4394-05	COIL	
L73			L40-2295-48	SMALL FIXED INDUCTOR (2.2UH)	
L74			L40-2285-48	SMALL FIXED INDUCTOR (220NH)	
L75			L34-4209-05	COIL	
L76			L40-3395-48	SMALL FIXED INDUCTOR (3.3UH)	
L77			L34-0943-05	COIL	
L78			L40-4785-48	SMALL FIXED INDUCTOR (470NH)	
L79			L40-3395-48	SMALL FIXED INDUCTOR (3.3UH)	
L81			L34-0535-05	COIL	
L82			L34-0536-05	COIL	
L83,84			L40-1015-48	SMALL FIXED INDUCTOR (100UH)	
L86			L40-2285-48	SMALL FIXED INDUCTOR (220NH)	
L87			L40-4705-48	SMALL FIXED INDUCTOR (47UH)	
L88			L19-0324-05	TROIDAL COIL	
L89		*	L34-4395-05	COIL	
L90			L39-1255-05	COIL	
L91		*	L34-4395-05	COIL	
L92			L34-4211-05	COIL	
L93			L40-1015-48	SMALL FIXED INDUCTOR (100UH)	
L94		*	L34-4395-05	COIL	
L95			L34-4207-05	COIL	
L98			L34-0943-05	COIL	
L99			L34-0781-05	COIL	
L100			L34-0536-05	COIL	
L101			L40-4705-48	SMALL FIXED INDUCTOR (47UH)	
L102			L40-3395-48	SMALL FIXED INDUCTOR (3.3UH)	
L107			L40-1015-48	SMALL FIXED INDUCTOR (100UH)	
L108			L40-1005-48	SMALL FIXED INDUCTOR (10UH)	
L110,111		*	L40-1805-48	SMALL FIXED INDUCTOR (18UH)	
L112,113		*	L40-1081-42	SMALL FIXED INDUCTOR (0.1UH)	
L301		*	L40-1001-42	SMALL FIXED INDUCTOR (10UH)	
L304-310		*	L40-1001-42	SMALL FIXED INDUCTOR (10UH)	
L314-318		*	L40-1001-42	SMALL FIXED INDUCTOR (10UH)	
L500-505			L40-1005-48	SMALL FIXED INDUCTOR (10UH)	
L506,507		*	L40-6805-48	SMALL FIXED INDUCTOR (68UH)	
L508			L40-1005-48	SMALL FIXED INDUCTOR (10UH)	
L509,510		*	L40-2705-48	SMALL FIXED INDUCTOR (27UH)	

PARTS LIST

RF UNIT (X44-3210-00)

Ref. No.	Address	New parts	Parts No.	Description	Destination
L511		*	L40-1805-48	SMALL FIXED INDUCTOR (18UH)	
L512,513		*	L40-2705-48	SMALL FIXED INDUCTOR (27UH)	
L514			L40-2205-48	SMALL FIXED INDUCTOR (22UH)	
L515		*	L40-1805-48	SMALL FIXED INDUCTOR (18UH)	
L516			L40-5695-48	SMALL FIXED INDUCTOR (5.6UH)	
L517			L40-1005-48	SMALL FIXED INDUCTOR (10UH)	
L518			L34-4222-05	COIL	
L519		*	L34-4421-05	COIL	
L520			L34-4222-05	COIL	
L521,522			L40-2285-48	SMALL FIXED INDUCTOR (220NH)	
L523			L40-1005-48	SMALL FIXED INDUCTOR (10UH)	
L524			L40-1095-48	SMALL FIXED INDUCTOR (1UH)	
L525,526			L40-2205-48	SMALL FIXED INDUCTOR (22UH)	
L528		*	L34-4396-05	COIL	
L529,530			L34-4222-05	COIL	
L531-534			L40-1015-48	SMALL FIXED INDUCTOR (100UH)	
L535			L33-0664-05	CHOKE COIL	
L536			L34-2354-05	COIL	
L537			L40-4795-48	SMALL FIXED INDUCTOR (4.7UH)	
L538			L33-0664-05	CHOKE COIL	
L539			L34-2354-05	COIL	
L540			L40-4795-48	SMALL FIXED INDUCTOR (4.7UH)	
L541			L33-0664-05	CHOKE COIL	
L542			L34-2354-05	COIL	
L543			L40-4795-48	SMALL FIXED INDUCTOR (4.7UH)	
L544			L33-0664-05	CHOKE COIL	
L545			L34-2354-05	COIL	
L546			L40-4795-48	SMALL FIXED INDUCTOR (4.7UH)	
L547			L40-3385-48	SMALL FIXED INDUCTOR (330NH)	
L548			L40-1295-48	SMALL FIXED INDUCTOR (1.2UH)	
L549			L40-3385-48	SMALL FIXED INDUCTOR (330NH)	
L550			L40-2285-48	SMALL FIXED INDUCTOR (220NH)	
L551			L40-1015-48	SMALL FIXED INDUCTOR (100NH)	
L552		*	L40-2795-48	SMALL FIXED INDUCTOR (2.7UH)	
L553			L40-1595-48	SMALL FIXED INDUCTOR (1.5UH)	
L554			L40-2295-48	SMALL FIXED INDUCTOR (2.2UH)	
L555			L40-3395-48	SMALL FIXED INDUCTOR (3.3UH)	
L556			L40-2285-48	SMALL FIXED INDUCTOR (220NH)	
L557-559			L40-1015-48	SMALL FIXED INDUCTOR (100UH)	
L580,581			L40-1005-48	SMALL FIXED INDUCTOR (10UH)	
L601			L40-3395-48	SMALL FIXED INDUCTOR (3.3UH)	
L603			L40-2785-48	SMALL FIXED INDUCTOR (270NH)	
L604			L40-1015-48	SMALL FIXED INDUCTOR (100UH)	
X800			L77-1521-15	CRYSTAL RESONATOR (20MHZ)	
XF1			L71-0401-05	CRYSTAL FILTER (73.05MHZ)	
XF2			L71-0235-05	CRYSTAL FILTER	
XF3			L71-0266-05	CRYSTAL FILTER (8830KHZ)	
Q	2F		N38-2640-46	PAN HEAD MACHINE SCREW	
CP500-505			R90-0721-05	MULTI-COMP 4.7K X 16	
R1			RD14BB2E470J	RD 47 J 1/4W	
R2			RD14BB2E151J	RD 150 J 1/4W	
R3			RK73FB2A101J	CHIP R 100 J 1/10W	
R5			RD14BB2E101J	RD 100 J 1/4W	
R7			RD14BB2E820J	RD 82 J 1/4W	
R9			RK73FB2A221J	CHIP R 220 J 1/10W	
R10			RK73FB2A181J	CHIP R 180 J 1/10W	
R11,12			RK73FB2A331J	CHIP R 330 J 1/10W	
R13			RK73FB2A470J	CHIP R 47 J 1/10W	

Ref. No.	Address	New parts	Parts No.	Description	Destination
R14			RK73FB2A222J	CHIP R 2.2K J 1/10W	
R18			RK73FB2A103J	CHIP R 10K J 1/10W	
R19			RK73FB2A330J	CHIP R 33 J 1/10W	
R20			RK73FB2A102J	CHIP R 1.0K J 1/10W	
R21,22			RK73FB2A330J	CHIP R 33 J 1/10W	
R23			RK73FB2A101J	CHIP R 100 J 1/10W	
R24			RK73FB2A222J	CHIP R 2.2K J 1/10W	
R25			RK73FB2A561J	CHIP R 560 J 1/10W	
R27			RK73FB2A181J	CHIP R 180 J 1/10W	
R28			RK73FB2A680J	CHIP R 68 J 1/10W	
R31			RK73FB2A103J	CHIP R 10K J 1/10W	
R44-55			RK73FB2A223J	CHIP R 22K J 1/10W	
R56			RK73FB2A121J	CHIP R 120 J 1/10W	
R58			RK73FB2A680J	CHIP R 68 J 1/10W	
R59,60			RK73FB2A560J	CHIP R 56 J 1/10W	
R61			RK73FB2A680J	CHIP R 68 J 1/10W	
R62			RK73FB2A220J	CHIP R 22 J 1/10W	
R63			RK73FB2A121J	CHIP R 120 J 1/10W	
R65			RK73FB2A220J	CHIP R 22 J 1/10W	
R66			RK73FB2A121J	CHIP R 120 J 1/10W	
R68			RK73FB2A220J	CHIP R 22 J 1/10W	
R69			RK73FB2A121J	CHIP R 120 J 1/10W	
R71			RK73FB2A220J	CHIP R 22 J 1/10W	
R72			RK73FB2A121J	CHIP R 120 J 1/10W	
R74			RK73FB2A220J	CHIP R 22 J 1/10W	
R75			RK73FB2A121J	CHIP R 120 J 1/10W	
R77			RK73FB2A220J	CHIP R 22 J 1/10W	
R78			RK73FB2A121J	CHIP R 120 J 1/10W	
R80			RK73FB2A220J	CHIP R 22 J 1/10W	
R81			RK73FB2A121J	CHIP R 120 J 1/10W	
R83			RK73FB2A220J	CHIP R 22 J 1/10W	
R84			RK73FB2A121J	CHIP R 120 J 1/10W	
R86			RK73FB2A220J	CHIP R 22 J 1/10W	
R87			RK73FB2A121J	CHIP R 120 J 1/10W	
R89			RK73FB2A220J	CHIP R 22 J 1/10W	
R90			RK73FB2A121J	CHIP R 120 J 1/10W	
R92			RK73FB2A151J	CHIP R 150 J 1/10W	
R93			RK73FB2A223J	CHIP R 22K J 1/10W	
R94			RK73FB2A104J	CHIP R 100K J 1/10W	
R95			RK73FB2A393J	CHIP R 39K J 1/10W	
R96,97			RK73FB2A330J	CHIP R 33 J 1/10W	
R98			RK73FB2A473J	CHIP R 47K J 1/10W	
R99			RK73FB2A151J	CHIP R 150 J 1/10W	
R100			RK73FB2A331J	CHIP R 330 J 1/10W	
R101			RK73FB2A221J	CHIP R 220 J 1/10W	
R102			RK73FB2A101J	CHIP R 100 J 1/10W	
R103			RK73FB2A473J	CHIP R 47K J 1/10W	
R104,105			RK73FB2A151J	CHIP R 150 J 1/10W	
R106			RK73FB2A152J	CHIP R 1.5K J 1/10W	
R107			RK73FB2A680J	CHIP R 68 J 1/10W	
R108			RK73FB2A220J	CHIP R 22 J 1/10W	
R109			RK73FB2A100J	CHIP R 10 J 1/10W	
R110			RK73FB2A151J	CHIP R 150 J 1/10W	
R111			RK73FB2A471J	CHIP R 470 J 1/10W	
R112			RK73FB2A102J	CHIP R 1.0K J 1/10W	
R113			RK73FB2A471J	CHIP R 470 J 1/10W	
R114			RK73FB2A562J	CHIP R 5.6K J 1/10W	
R115			RK73FB2A220J	CHIP R 22 J 1/10W	
R116			RK73FB2A150J	CHIP R 15 J 1/10W	

PARTS LSIT

RF UNIT (X44-3210-00)

Ref. No.	Address	New parts	Parts No.	Description			Destination
R117			RK73FB2A471J	CHIP R	470	J 1/10W	
R118			RK73FB2A680J	CHIP R	68	J 1/10W	
R119,120			RK73FB2A331J	CHIP R	330	J 1/10W	
R121			RK73FB2A102J	CHIP R	1.0K	J 1/10W	
R122,123			RK73FB2A100J	CHIP R	10	J 1/10W	
R124			RK73FB2A471J	CHIP R	470	J 1/10W	
R125,126			RK73FB2A100J	CHIP R	10	J 1/10W	
R127			RK73FB2A180J	CHIP R	18	J 1/10W	
R128			RK73FB2A331J	CHIP R	330	J 1/10W	
R130			RK73FB2A331J	CHIP R	330	J 1/10W	
R131			RK73FB2A101J	CHIP R	100	J 1/10W	
R132			RK73FB2A223J	CHIP R	22K	J 1/10W	
R133			RK73FB2A333J	CHIP R	33K	J 1/10W	
R134			RK73FB2A122J	CHIP R	1.2K	J 1/10W	
R139			RK73FB2A104J	CHIP R	100K	J 1/10W	
R140			RK73FB2A473J	CHIP R	47K	J 1/10W	
R142			RK73FB2A473J	CHIP R	47K	J 1/10W	
R143			RK73FB2A471J	CHIP R	470	J 1/10W	
R144			RK73FB2A221J	CHIP R	220	J 1/10W	
R145			RK73FB2A330J	CHIP R	33	J 1/10W	
R146			RK73FB2A471J	CHIP R	470	J 1/10W	
R147			RK73FB2A562J	CHIP R	5.6K	J 1/10W	
R148			RK73FB2A223J	CHIP R	22K	J 1/10W	
R150			RK73FB2A181J	CHIP R	180	J 1/10W	
R154			RK73FB2A471J	CHIP R	470	J 1/10W	
R156			RK73FB2A330J	CHIP R	33	J 1/10W	
R157			RK73FB2A182J	CHIP R	1.8K	J 1/10W	
R158			RK73FB2A330J	CHIP R	33	J 1/10W	
R159			RK73FB2A101J	CHIP R	100	J 1/10W	
R160,161			RK73FB2A222J	CHIP R	2.2K	J 1/10W	
R162			RK73FB2A101J	CHIP R	100	J 1/10W	
R163			RK73FB2A332J	CHIP R	3.3K	J 1/10W	
R164			RK73FB2A152J	CHIP R	1.5K	J 1/10W	
R165			RK73FB2A473J	CHIP R	47K	J 1/10W	
R166			RK73FB2A222J	CHIP R	2.2K	J 1/10W	
R167			RK73FB2A101J	CHIP R	100	J 1/10W	
R168			RK73FB2A393J	CHIP R	39K	J 1/10W	
R169			RK73FB2A102J	CHIP R	1.0K	J 1/10W	
R170			RK73FB2A223J	CHIP R	22K	J 1/10W	
R171,172			RK73FB2A101J	CHIP R	100	J 1/10W	
R173			RK73FB2A393J	CHIP R	39K	J 1/10W	
R174			RK73FB2A223J	CHIP R	22K	J 1/10W	
R175			RK73FB2A102J	CHIP R	1.0K	J 1/10W	
R176			RK73FB2A103J	CHIP R	10K	J 1/10W	
R177			RK73FB2A153J	CHIP R	15K	J 1/10W	
R178			RK73FB2A563J	CHIP R	56K	J 1/10W	
R179			RK73FB2A103J	CHIP R	10K	J 1/10W	
R180			RK73FB2A104J	CHIP R	100K	J 1/10W	
R181			RK73FB2A222J	CHIP R	2.2K	J 1/10W	
R182			RK73FB2A103J	CHIP R	10K	J 1/10W	
R183			RK73FB2A470J	CHIP R	47	J 1/10W	
R184			RK73FB2A121J	CHIP R	120	J 1/10W	
R185			RK73FB2A103J	CHIP R	10K	J 1/10W	
R186			RK73FB2A562J	CHIP R	5.6K	J 1/10W	
R188			RK73FB2A470J	CHIP R	47	J 1/10W	
R189			RK73FB2A152J	CHIP R	1.5K	J 1/10W	
R190			RK73FB2A103J	CHIP R	10K	J 1/10W	
R191			RK73FB2A151J	CHIP R	150	J 1/10W	
R192			RK73FB2A102J	CHIP R	1.0K	J 1/10W	

Ref. No.	Address	New parts	Parts No.	Description			Destination
R195,196			RK73FB2A330J	CHIP R	33	J 1/10W	
R197			RK73FB2A273J	CHIP R	27K	J 1/10W	
R198			RK73FB2A103J	CHIP R	10K	J 1/10W	
R199,200			RK73FB2A221J	CHIP R	220	J 1/10W	
R201			RK73FB2A473J	CHIP R	47K	J 1/10W	
R202,203			RK73FB2A680J	CHIP R	68	J 1/10W	
R204			RK73FB2A101J	CHIP R	100	J 1/10W	
R205,206			RK73FB2A471J	CHIP R	470	J 1/10W	
R207,208			RK73FB2A330J	CHIP R	33	J 1/10W	
R209			RK73FB2A471J	CHIP R	470	J 1/10W	
R210			RK73FB2A102J	CHIP R	1.0K	J 1/10W	
R211			RK73FB2A472J	CHIP R	4.7K	J 1/10W	
R212,213			RK73FB2A330J	CHIP R	33	J 1/10W	
R214			RK73FB2A103J	CHIP R	10K	J 1/10W	
R215			RK73FB2A823J	CHIP R	82K	J 1/10W	
R216			RK73FB2A681J	CHIP R	680	J 1/10W	
R217			RK73FB2A151J	CHIP R	150	J 1/10W	
R218			RK73FB2A332J	CHIP R	3.3K	J 1/10W	
R219			RK73FB2A103J	CHIP R	10K	J 1/10W	
R220			RK73FB2A101J	CHIP R	100	J 1/10W	
R221			RK73FB2A102J	CHIP R	1.0K	J 1/10W	
R222			RK73FB2A103J	CHIP R	10K	J 1/10W	
R223			RK73FB2A392J	CHIP R	3.9K	J 1/10W	
R224			RK73FB2A332J	CHIP R	3.3K	J 1/10W	
R225			RK73FB2A223J	CHIP R	22K	J 1/10W	
R226			RK73FB2A562J	CHIP R	5.6K	J 1/10W	
R229			RK73FB2A103J	CHIP R	10K	J 1/10W	
R230			RK73FB2A152J	CHIP R	1.5K	J 1/10W	
R231,232			RK73FB2A221J	CHIP R	220	J 1/10W	
R233			RK73FB2A152J	CHIP R	1.5K	J 1/10W	
R234			RK73FB2A101J	CHIP R	100	J 1/10W	
R235			RK73FB2A152J	CHIP R	1.5K	J 1/10W	
R236,237			RK73FB2A101J	CHIP R	100	J 1/10W	
R238			RK73FB2A152J	CHIP R	1.5K	J 1/10W	
R239			RK73FB2A101J	CHIP R	100	J 1/10W	
R240			RK73FB2A152J	CHIP R	1.5K	J 1/10W	
R241,242			RK73FB2A331J	CHIP R	330	J 1/10W	
R243			RK73FB2A152J	CHIP R	1.5K	J 1/10W	
R244			RK73FB2A101J	CHIP R	100	J 1/10W	
R245			RK73FB2A152J	CHIP R	1.5K	J 1/10W	
R246			RK73FB2A221J	CHIP R	220	J 1/10W	
R248			RK73FB2A822J	CHIP R	8.2K	J 1/10W	
R249			RK73FB2A222J	CHIP R	2.2K	J 1/10W	
R250			RK73FB2A103J	CHIP R	10K	J 1/10W	
R251			RK73FB2A153J	CHIP R	15K	J 1/10W	
R252			RK73FB2A102J	CHIP R	1.0K	J 1/10W	
R253			RK73FB2A472J	CHIP R	4.7K	J 1/10W	
R256			RK73FB2A472J	CHIP R	4.7K	J 1/10W	
R257			RK73FB2A101J	CHIP R	100	J 1/10W	
R258			RK73FB2A331J	CHIP R	330	J 1/10W	
R259			RK73FB2A104J	CHIP R	100K	J 1/10W	
R260			RK73FB2A102J	CHIP R	1.0K	J 1/10W	
R261			RK73FB2A331J	CHIP R	330	J 1/10W	
R262			RK73FB2A102J	CHIP R	1.0K	J 1/10W	
R263			RK73FB2A332J	CHIP R	3.3K	J 1/10W	
R264			RK73FB2A222J	CHIP R	2.2K	J 1/10W	
R265			RK73FB2A272J	CHIP R	2.7K	J 1/10W	
R266			RK73FB2A332J	CHIP R	3.3K	J 1/10W	
R267			RK73FB2A822J	CHIP R	8.2K	J 1/10W	

PARTS LIST

RF UNIT (X44-3210-00)

Ref. No.	Address	New parts	Parts No.	Description	Destination
R268			RK73FB2A273J	CHIP R 27K J 1/10W	
R269			RK73FB2A103J	CHIP R 10K J 1/10W	
R271			RK73FB2A224J	CHIP R 220K J 1/10W	
R272			RK73FB2A104J	CHIP R 100K J 1/10W	
R276			RK73FB2A474J	CHIP R 470K J 1/10W	
R277			RK73FB2A103J	CHIP R 10K J 1/10W	
R278			RK73FB2A224J	CHIP R 220K J 1/10W	
R279			RK73FB2A473J	CHIP R 47K J 1/10W	
R280			RK73FB2A223J	CHIP R 22K J 1/10W	
R281			RK73FB2A222J	CHIP R 2.2K J 1/10W	
R284			RK73FB2A224J	CHIP R 220K J 1/10W	
R285			RK73FB2A103J	CHIP R 10K J 1/10W	
R286			RK73FB2A101J	CHIP R 100 J 1/10W	
R287			RK73FB2A103J	CHIP R 10K J 1/10W	
R288			RK73FB2A472J	CHIP R 4.7K J 1/10W	
R289			RK73FB2A103J	CHIP R 10K J 1/10W	
R290,291			RK73FB2A472J	CHIP R 4.7K J 1/10W	
R292,293			RK73FB2A681J	CHIP R 680 J 1/10W	
R294-297			RK73FB2A224J	CHIP R 220K J 1/10W	
R298			RK73FB2A472J	CHIP R 4.7K J 1/10W	
R320			RK73FB2A472J	CHIP R 4.7K J 1/10W	
R322,323			RK73FB2A223J	CHIP R 22K J 1/10W	
R324			RK73FB2A101J	CHIP R 100 J 1/10W	
R325			RK73FB2A102J	CHIP R 1.0K J 1/10W	
R329			RK73FB2A224J	CHIP R 220K J 1/10W	
R330			RK73FB2A104J	CHIP R 100K J 1/10W	
R331			RK73FB2A684J	CHIP R 680K J 1/10W	
R332			RK73FB2A103J	CHIP R 10K J 1/10W	
R333			RK73FB2A680J	CHIP R 68 J 1/10W	
R334			RK73FB2A391J	CHIP R 390 J 1/10W	
R335			RK73FB2A272J	CHIP R 2.7K J 1/10W	
R336,337			RK73FB2A104J	CHIP R 100K J 1/10W	
R338			RK73FB2A154J	CHIP R 150K J 1/10W	
R339			RK73FB2A224J	CHIP R 220K J 1/10W	
R340			RK73FB2A101J	CHIP R 100 J 1/10W	
R351-362			RK73FB2A103J	CHIP R 10K J 1/10W	
R363			R92-0670-05	CHIP R 0 OHM	
R380			RK73FB2A682J	CHIP R 6.8K J 1/10W	
R381			RK73FB2A183J	CHIP R 18K J 1/10W	
R382			RK73FB2A181J	CHIP R 180 J 1/10W	
R383-385			R92-0670-05	CHIP R 0 OHM	
R386			RK73FB2A330J	CHIP R 33 J 1/10W	
R500			RK73FB2A103J	CHIP R 10K J 1/10W	
R501			RK73FB2A470J	CHIP R 47 J 1/10W	
R502			RK73FB2A331J	CHIP R 330 J 1/10W	
R503			RK73FB2A472J	CHIP R 4.7K J 1/10W	
R504			RK73FB2A681J	CHIP R 680 J 1/10W	
R505			RK73FB2A561J	CHIP R 560 J 1/10W	
R506			RK73FB2A333J	CHIP R 33K J 1/10W	
R507			RK73FB2A101J	CHIP R 100 J 1/10W	
R508			RK73FB2A272J	CHIP R 2.7K J 1/10W	
R509			RK73FB2A681J	CHIP R 680 J 1/10W	
R510			RK73FB2A470J	CHIP R 47 J 1/10W	
R511			RK73FB2A122J	CHIP R 1.2K J 1/10W	
R512			RK73FB2A472J	CHIP R 4.7K J 1/10W	
R513			RK73FB2A103J	CHIP R 10K J 1/10W	
R514			RK73FB2A220J	CHIP R 22 J 1/10W	
R515			RK73FB2A331J	CHIP R 330 J 1/10W	
R516			RK73FB2A560J	CHIP R 56 J 1/10W	

Ref. No.	Address	New parts	Parts No.	Description	Destination
R517-519			RK73FB2A470J	CHIP R 47 J 1/10W	
R520			RK73FB2A101J	CHIP R 100 J 1/10W	
R521			RK73FB2A223J	CHIP R 22K J 1/10W	
R522			RK73FB2A331J	CHIP R 330 J 1/10W	
R523			RK73FB2A470J	CHIP R 47 J 1/10W	
R524,525			RK73FB2A102J	CHIP R 1.0K J 1/10W	
R526			RK73FB2A331J	CHIP R 330 J 1/10W	
R527			RK73FB2A680J	CHIP R 68 J 1/10W	
R528			RK73FB2A391J	CHIP R 390 J 1/10W	
R529			RK73FB2A680J	CHIP R 68 J 1/10W	
R530			RK73FB2A103J	CHIP R 10K J 1/10W	
R531			RK73FB2A222J	CHIP R 2.2K J 1/10W	
R532			RK73FB2A151J	CHIP R 150 J 1/10W	
R533			RK73FB2A680J	CHIP R 68 J 1/10W	
R534			RK73FB2A101J	CHIP R 100 J 1/10W	
R535			RK73FB2A471J	CHIP R 470 J 1/10W	
R536			RK73FB2A470J	CHIP R 47 J 1/10W	
R537			RK73FB2A220J	CHIP R 22 J 1/10W	
R545			RK73FB2A103J	CHIP R 10K J 1/10W	
R546			RK73FB2A821J	CHIP R 820 J 1/10W	
R547			RK73FB2A331J	CHIP R 330 J 1/10W	
R548,549			RK73FB2A470J	CHIP R 47 J 1/10W	
R550			RK73FB2A181J	CHIP R 180 J 1/10W	
R551			RK73FB2A221J	CHIP R 220 J 1/10W	
R552			RK73FB2A101J	CHIP R 100 J 1/10W	
R553			RK73FB2A333J	CHIP R 33K J 1/10W	
R554			RK73FB2A682J	CHIP R 6.8K J 1/10W	
R555,556			RK73FB2A101J	CHIP R 100 J 1/10W	
R557			RK73FB2A221J	CHIP R 220 J 1/10W	
R558			RK73FB2A101J	CHIP R 100 J 1/10W	
R559,560			RK73FB2A473J	CHIP R 47K J 1/10W	
R561,562			RK73FB2A101J	CHIP R 100 J 1/10W	
R563			RK73FB2A102J	CHIP R 1.0K J 1/10W	
R564			RK73FB2A681J	CHIP R 680 J 1/10W	
R565			RK73FB2A101J	CHIP R 100 J 1/10W	
R566			RK73FB2A471J	CHIP R 470 J 1/10W	
R567			RK73FB2A221J	CHIP R 220 J 1/10W	
R570,571			RK73FB2A222J	CHIP R 2.2K J 1/10W	
R572			RK73FB2A272J	CHIP R 2.7K J 1/10W	
R580-583			RK73FB2A223J	CHIP R 22K J 1/10W	
R584			RK73FB2A101J	CHIP R 100 J 1/10W	
R586			RK73FB2A682J	CHIP R 6.8K J 1/10W	
R587			RK73FB2A473J	CHIP R 47K J 1/10W	
R588,589			RK73FB2A101J	CHIP R 100 J 1/10W	
R591			RK73FB2A682J	CHIP R 6.8K J 1/10W	
R592			RK73FB2A473J	CHIP R 47K J 1/10W	
R593,594			RK73FB2A101J	CHIP R 100 J 1/10W	
R596			RK73FB2A682J	CHIP R 6.8K J 1/10W	
R597			RK73FB2A473J	CHIP R 47K J 1/10W	
R598,599			RK73FB2A101J	CHIP R 100 J 1/10W	
R601			RK73FB2A682J	CHIP R 6.8K J 1/10W	
R602			RK73FB2A473J	CHIP R 47K J 1/10W	
R603			RK73FB2A101J	CHIP R 100 J 1/10W	
R604			RK73FB2A470J	CHIP R 47 J 1/10W	
R605			RK73FB2A392J	CHIP R 3.9K J 1/10W	
R606			RK73FB2A103J	CHIP R 10K J 1/10W	
R608			RK73FB2A471J	CHIP R 470 J 1/10W	
R609,610			RK73FB2A103J	CHIP R 10K J 1/10W	
R611			RK73FB2A102J	CHIP R 1.0K J 1/10W	

PARTS LSIT

RF UNIT (X44-3210-00)

Ref. No.	Address	New parts	Parts No.	Description	Destination
R612			RK73FB2A821J	CHIP R 820 J 1/10W	
R613			RK73FB2A271J	CHIP R 270 J 1/10W	
R614			RK73FB2A101J	CHIP R 100 J 1/10W	
R615			RK73FB2A220J	CHIP R 22 J 1/10W	
R616			RK73FB2A470J	CHIP R 47 J 1/10W	
R617			RK73FB2A392J	CHIP R 3.9K J 1/10W	
R618			RK73FB2A103J	CHIP R 10K J 1/10W	
R619			RK73FB2A220J	CHIP R 22 J 1/10W	
R620			RK73FB2A471J	CHIP R 470 J 1/10W	
R621			RK73FB2A183J	CHIP R 18K J 1/10W	
R622			RK73FB2A122J	CHIP R 1.2K J 1/10W	
R623			RK73FB2A102J	CHIP R 1.0K J 1/10W	
R624			RK73FB2A334J	CHIP R 330K J 1/10W	
R625			RK73FB2A182J	CHIP R 1.8K J 1/10W	
R626			RK73FB2A331J	CHIP R 330 J 1/10W	
R627			RK73FB2A102J	CHIP R 1.0K J 1/10W	
R628			RK73FB2A101J	CHIP R 100 J 1/10W	
R629			RK73FB2A821J	CHIP R 820 J 1/10W	
R630			RK73FB2A822J	CHIP R 8.2K J 1/10W	
R631			RK73FB2A103J	CHIP R 10K J 1/10W	
R632			RK73FB2A102J	CHIP R 1.0K J 1/10W	
R633			RK73FB2A181J	CHIP R 180 J 1/10W	
R634			RK73FB2A331J	CHIP R 330 J 1/10W	
R635			RK73FB2A823J	CHIP R 82K J 1/10W	
R636			RK73FB2A333J	CHIP R 33K J 1/10W	
R637			RK73FB2A101J	CHIP R 100 J 1/10W	
R638			RK73FB2A470J	CHIP R 47 J 1/10W	
R639			RK73FB2A682J	CHIP R 6.8K J 1/10W	
R640			RK73FB2A102J	CHIP R 1.0K J 1/10W	
R641			RK73FB2A151J	CHIP R 150 J 1/10W	
R642			RK73FB2A150J	CHIP R 15 J 1/10W	
R643			RK73FB2A471J	CHIP R 470 J 1/10W	
R644			RK73FB2A103J	CHIP R 10K J 1/10W	
R645			RK73FB2A392J	CHIP R 3.9K J 1/10W	
R646			RK73FB2A822J	CHIP R 8.2K J 1/10W	
R647			RK73FB2A102J	CHIP R 1.0K J 1/10W	
R648			RK73FB2A684J	CHIP R 680K J 1/10W	
R649			RK73FB2A182J	CHIP R 1.8K J 1/10W	
R650			RK73FB2A103J	CHIP R 10K J 1/10W	
R651			RK73FB2A472J	CHIP R 4.7K J 1/10W	
R652			RK73FB2A103J	CHIP R 10K J 1/10W	
R653			RK73FB2A104J	CHIP R 100K J 1/10W	
R655-656			RK73FB2A103J	CHIP R 10K J 1/10W	
R657			RK73FB2A471J	CHIP R 470 J 1/10W	
R658			RK73FB2A101J	CHIP R 100 J 1/10W	
R659			RK73FB2A470J	CHIP R 47 J 1/10W	
R690-697			RK73FB2A221J	CHIP R 220 J 1/10W	
R699			RK73FB2A102J	CHIP R 1.0K J 1/10W	
R710-712			RK73FB2A103J	CHIP R 10K J 1/10W	
R800			RK73FB2A223J	CHIP R 22K J 1/10W	
R801			RK73FB2A103J	CHIP R 10K J 1/10W	
R802			RK73FB2A222J	CHIP R 2.2K J 1/10W	
R803			RK73FB2A271J	CHIP R 270 J 1/10W	
R804			RK73FB2A101J	CHIP R 100 J 1/10W	
R901-902			RK73FB2A101J	CHIP R 100 J 1/10W	
R903-906			RK73FB2A101J	CHIP R 100 J 1/10W	
R908-920			RK73FB2A101J	CHIP R 100 J 1/10W	
R925-928			RK73EB2B221J	CHIP R 220 J 1/8W	
VR2			R12-6417-05	TRIMMING POT. 1K	

Ref. No.	Address	New parts	Parts No.	Description	Destination
VR3			R12-6427-05	TRIMMING POT. 47K	
VR901-904		*	R31-0605-05	VARIABLE RESISTOR 100K	
VR905,906		*	R31-0606-05	VARIABLE RESISTOR 10K	
K1-3			S51-1428-05	RELAY	
K4			S51-1420-05	RELAY	
S800			S31-2420-05	SLIDE SWITCH	
D1-3			LFB01	DIODE	
D4-7			RLS245	DIODE	
D8			1SV128	DIODE	
D10			LFB01	DIODE	
D11			1SV128	DIODE	
D12			RLS135	DIODE	
D13			1SV128	DIODE	
D14			RLS135	DIODE	
D15			1SV128	DIODE	
D16			RLS135	DIODE	
D17			1SV128	DIODE	
D18			RLS135	DIODE	
D19			1SV128	DIODE	
D20			RLS135	DIODE	
D21			1SV128	DIODE	
D22			RLS135	DIODE	
D23			1SV128	DIODE	
D24			RLS135	DIODE	
D25			1SV128	DIODE	
D26			RLS135	DIODE	
D27			1SV128	DIODE	
D28			RLS135	DIODE	
D29			1SV128	DIODE	
D30			RLS135	DIODE	
D31			1SV128	DIODE	
D32			RLS135	DIODE	
D33			1SV128	DIODE	
D35			RLS135	DIODE	
D36			1SV128	DIODE	
D37			RLS135	DIODE	
D38,39			1SV128	DIODE	
D40			RLS135	DIODE	
D41			1SV128	DIODE	
D42,43			DAN235K	DIODE	
D46			HSM88ASR	DIODE	
D47			LFB01	DIODE	
D49			1SV172	DIODE	
D50			RD6.2M(B1)	ZENER DIODE	
D51			B30-2004-05	LED	
D52			RD12M(B2)	ZENER DIODE	
D53,54			1SS355	DIODE	
D55			RD3.0M(B2)	ZENER DIODE	
D56			1SS355	DIODE	
D57			B30-2004-05	LED	
D58			LFB01	DIODE	
D59			1SS355	DIODE	
D60,61			DAN202K	DIODE	
D62-69			1SV128	DIODE	
D70			RD6.2M(B1)	ZENER DIODE	
D71			RD4.7M(B2)	ZENER DIODE	
D72			1SS355	DIODE	
D500			1SV166	DIODE	

PARTS LIST

RF UNIT (X44-3210-00)
FINAL UNIT (X45-351X-XX)

Ref. No.	Address	New parts	Parts No.	Description	Destination
D501			RLS73	DIODE	
D502			1SV166	DIODE	
D503			RLS73	DIODE	
D504			1SV166	DIODE	
D505			RLS73	DIODE	
D506			1SV166	DIODE	
D507			RLS73	DIODE	
D508			1SS181	DIODE	
IC1,2			TC9174F	IC (CMOS I/O EXTENSION)	
IC6			NJM2904M	IC (OP AMP X2)	
IC7			M62363FP	IC (8bit D/A CONVERTER)	
IC8			NJM2902M	IC (OP AMP X4)	
IC9			NJM2903M	IC (COMPARATOR X2)	
IC10			NJM78L05UA	IC (VOLTAGE REGULATOR/ +5V)	
IC500-502			F71022	IC (DDS)	
IC503			UPD74HC390G	IC (DUAL DECADE COUNTER)	
IC505,506			SN16913P	IC (DUBLE BALANCED MIXERS)	
IC507			MB86001PF	IC	
IC508			SN76514N	IC (MIXER)	
IC509			MB86001PF	IC	
IC510			TA78L09F	IC (VOLTAGE REGULATOR/ +9V)	
IC511		*	TA78DS09F	IC	
PL1,2		*	B30-2134-05	LAMP	
Q1			DTA124EK	DIGITAL TRANSISTOR	
Q2			DTC124EK	DIGITAL TRANSISTOR	
Q3			FMA1	TRANSISTOR	
Q5			2SC2954	TRANSISTOR	
Q6			2SC2712(Y)	TRANSISTOR	
Q7-12			FMG4	TRANSISTOR	
Q13			3SK131(M)	FET	
Q14,15		*	2SK2218(5)	FET	
Q16			2SC2954	TRANSISTOR	
Q17-20			2SK520(K44)	FET	
Q21			2SD1624(S)	TRANSISTOR	
Q22			2SC2714(Y)	TRANSISTOR	
Q23,24			3SK131(M)	FET	
Q26,27			2SK520(K43)	FET	
Q28-32			2SC2712(Y)	TRANSISTOR	
Q33			3SK131(M)	FET	
Q35,36			3SK184(R)	FET	
Q37-39			3SK131(M)	FET	
Q42			DTC124EK	DIGITAL TRANSISTOR	
Q43,44			2SC2712(Y)	TRANSISTOR	
Q45,46			DTC143TK	DIGITAL TRANSISTOR	
Q47			2SC2712(Y)	TRANSISTOR	
Q48			DTA124EK	DIGITAL TRANSISTOR	
Q49			2SC2712(Y)	TRANSISTOR	
Q50			2SK208(Y)	FET	
Q51			DTC124EK	DIGITAL TRANSISTOR	
Q52			2SC2712(Y)	TRANSISTOR	
Q54			2SC2712(Y)	TRANSISTOR	
Q55			2SB1188(Q,R)	TRANSISTOR	
Q56			DTC124EK	DIGITAL TRANSISTOR	
Q57,58			2SB1188(Q,R)	TRANSISTOR	
Q59,60			DTC143EK	DIGITAL TRANSISTOR	
Q61			FMC3	TRANSISTOR	
Q62			DTA143EK	DIGITAL TRANSISTOR	
Q63			FMC3	TRANSISTOR	
Q64			DTA143EK	DIGITAL TRANSISTOR	

Ref. No.	Address	New parts	Parts No.	Description	Destination
Q65			2SA1162(Y)	TRANSISTOR	
Q66			DTC114EK	DIGITAL TRANSISTOR	
Q70			DTC114EK	DIGITAL TRANSISTOR	
Q71			DTA114EK	DIGITAL TRANSISTOR	
Q500-503			2SC2712(Y)	TRANSISTOR	
Q504,505			2SK508NV(K53)	FET	
Q506-508			2SC2712(Y)	TRANSISTOR	
Q510,511			2SC2712(Y)	TRANSISTOR	
Q512-514			2SC2714(Y)	TRANSISTOR	
Q515			2SC2712(Y)	TRANSISTOR	
Q516-519			DTC114EK	DIGITAL TRANSISTOR	
Q520-523			2SK508NV(K53)	FET	
Q524,525			2SC2714(Y)	TRANSISTOR	
Q526			2SC2996(Y,O)	TRANSISTOR	
Q527-529			2SC3722K(R)	TRANSISTOR	
Q530			2SC2712(Y)	TRANSISTOR	
Q531			2SC2714(Y)	TRANSISTOR	
Q532			2SC2954	TRANSISTOR	
Q533			DTA124EK	DIGITAL TRANSISTOR	
Q534-536			2SC3722K(R)	TRANSISTOR	
Q537			2SD1757K	TRANSISTOR	
Q539			2SC2714(Y)	TRANSISTOR	
Q800			2SC2714(Y)	TRANSISTOR	
TH1			157-101-53019	THERMISTOR 100	
TH2			157-302-53008	THERMISTOR 3K	
TH3			157-101-53019	THERMISTOR 100	
TH4			157-302-53008	THERMISTOR 3K	
S901,902			W02-1687-15	ENCODER (FILTER)	
S903		*	W02-1861-05	ENCODER (RIT/XIT)	
S904			W02-1660-15	ENCODER (M.CH/VFO.CH)	
A501	2F		X58-3390-03	SUB UNIT (VCO2)	

FINAL UNIT (X45-351X-XX) 0-00 : K,P,M,M2,X 2-71 : E,E2,E3,E9

C1			CK73FF1H473Z	CHIP C	0.047UF	Z
C2			CC73FCH1H101J	CHIP C	100PF	J
C3			CC45FCH2H030C	CERAMIC	3.0PF	C
C4			CC73FCH1H560J	CHIP C	56PF	J
C5			CK73FF1H473Z	CHIP C	0.047UF	Z
C6			CE04EW1H010M	ELECTRO	1.0UF	50WV
C7			CK73FB1H103K	CHIP C	0.010UF	K
C8-18			CK73FB1H102K	CHIP C	1000PF	K
C19-33			CK73FB1H103K	CHIP C	0.010UF	K
C101			CM93D2H102J	MICA	1000PF	J
C102			CC45FSL2H331J	CERAMIC	330PF	J
C103			CC45FSL2H271J	CERAMIC	270PF	J
C104,105			CM93D2H102J	MICA	1000PF	J
C106			CC45FSL2H151J	CERAMIC	150PF	J
C107			CM93D2H222J	MICA	2200PF	J
C108		*	CC45FSL2H181J	CERAMIC	180PF	J
C109			CC45FSL2H101J	CERAMIC	100PF	J
C110			CM93D2H102J	MICA	1000PF	J
C111			CM93D2H561J	MICA	560PF	J
C112			CC45FSL2H471J	CERAMIC	470PF	J
C113,114		*	CC45FSL2H181J	CERAMIC	180PF	J
C115			CC45FSL2H391J	CERAMIC	390PF	J
C116			CC45FSL2H471J	CERAMIC	470PF	J

PARTS LSIT

FINAL UNIT (X45-351X-XX)

Ref. No.	Address	New parts	Parts No.	Description			Destination
C117			CC45FSL2H271J	CERAMIC	270PF	J	
C118			CC45FSL2H391J	CERAMIC	390PF	J	
C119			CC45FSL2H471J	CERAMIC	470PF	J	
C120		*	CC45FSL2H181J	CERAMIC	180PF	J	
C121			CC45FSL2H331J	CERAMIC	330PF	J	
C122			CC45FSL2H820J	CERAMIC	82PF	J	
C123			CC45FSL2H331J	CERAMIC	330PF	J	
C124			CC45FSL2H121J	CERAMIC	120PF	J	
C125			CC45FSL2H270J	CERAMIC	27PF	J	
C126			CC45FSL2H151J	CERAMIC	150PF	J	
C127			CC45FSL2H471J	CERAMIC	470PF	J	
C128			CC45FSL2H270J	CERAMIC	27PF	J	
C129			CC45FSL2H220J	CERAMIC	22PF	J	
C130			CC45FSL2H331J	CERAMIC	330PF	J	
C131			CC45FSL2H471J	CERAMIC	470PF	J	
C132			CC45FSL2H680J	CERAMIC	68PF	J	
C133			CC45FSL2H560J	CERAMIC	56PF	J	
C134			CC45FSL2H151J	CERAMIC	150PF	J	
C135			CC45FSL2H471J	CERAMIC	470PF	J	
C136			CC45FSL2H560J	CERAMIC	56PF	J	
C137			CC45FSL2H151J	CERAMIC	150PF	J	
C138			CC45FSL2H331J	CERAMIC	330PF	J	
C139			CC45FSL2H330J	CERAMIC	33PF	J	
C140,141			CC45FSL2H221J	CERAMIC	220PF	J	
C142			CC45FSL2H101J	CERAMIC	100PF	J	
C143,144			CC45FSL2H151J	CERAMIC	150PF	J	
C145			CC45FSL2H120J	CERAMIC	12PF	J	
C146			CC45FSL2H271J	CERAMIC	270PF	J	
C147			CC45FSL2H390J	CERAMIC	39PF	J	
C148,149			CC45FSL2H820J	CERAMIC	82PF	J	
C150			CC45FSL2H100D	CERAMIC	10PF	D	
C151			CC45FSL2H121J	CERAMIC	120PF	J	
C152			CC45FSL2H470J	CERAMIC	47PF	J	
C153			CC45FSL2H330J	CERAMIC	33PF	J	
C154			CC45FSL2H820J	CERAMIC	82PF	J	
C161			CC45FSL2H100D	CERAMIC	10PF	D	
C162		*	CC45FSL2H090D	CERAMIC	9.0PF	D	
C163			CC45FSL2H270J	CERAMIC	27PF	J	
C301,302			CK73FB1H103K	CHIP C	0.010UF	K	
C304			CC73FCH1H101J	CHIP C	100PF	J	
C305			CC73FCH1H181J	CHIP C	180PF	J	
C306			CC73FCH1H390J	CHIP C	39PF	J	
C401			CE04EW1C470M	ELECTRO	47UF	16WV	
C402			CE04EW1C100M	ELECTRO	10UF	16WV	
C405			CE04EW1E470M	ELECTRO	47UF	25WV	
C406,407			CK73FB1E104K	CHIP C	0.10UF	K	
C408			CE04EW1E470M	ELECTRO	47UF	25WV	
C409			CK73FB1E104K	CHIP C	0.10UF	K	
C410			CE04EW1C470M	ELECTRO	47UF	16WV	
C411			CK73FB1H103K	CHIP C	0.010UF	K	
C412,413			CK73FB1H222K	CHIP C	2200PF	K	
C414			CE04EW1C330M	ELECTRO	33UF	16WV	
C415,416			CE04EW1C101M	ELECTRO	100UF	16WV	
C417			CK73FB1H103K	CHIP C	0.010UF	K	
C418-420			CK73FB1H102K	CHIP C	1000PF	K	
C421			CK73FB1H103K	CHIP C	0.010UF	K	
C422			CE04EW1E470M	ELECTRO	47UF	25WV	
C431-433			CK73FB1H103K	CHIP C	0.010UF	K	
C435			CK73FB1E104K	CHIP C	0.10UF	K	

Ref. No.	Address	New parts	Parts No.	Description			Destination
C436			CK73FB1H102K	CHIP C	1000PF	K	
C437			CK73FB1H103K	CHIP C	0.010UF	K	
C438			CE04EW1H010M	ELECTRO	1.0UF	50WV	
C439			CK73FB1H103K	CHIP C	0.010UF	K	
C450			CK73FB1H103K	CHIP C	0.010UF	K	
C452-454			CK73FB1H103K	CHIP C	0.010UF	K	
C455			CK73FB1H102K	CHIP C	1000PF	K	
C456-458			CK73FB1H103K	CHIP C	0.010UF	K	
C461			CC73FSL1H221J	CHIP C	220PF	J	
C465			CK73FB1E104K	CHIP C	0.10UF	K	
C466-471			CK73FF1C105Z	CHIP C	1.0UF	Z	
C472,473			CK73FB1E104K	CHIP C	0.10UF	K	
C479			CE04EW1H010M	ELECTRO	1.0UF	50WV	
C480-485			CK73FB1H103K	CHIP C	0.010UF	K	
C486-488			CK73FB1E104K	CHIP C	0.10UF	K	
C489			CC73FCH1H470J	CHIP C	47PF	J	
C490,491			CK73FB1H103K	CHIP C	0.010UF	K	
C492			CK73FB1E104K	CHIP C	0.10UF	K	
C493			CK73FB1H103K	CHIP C	0.010UF	K	
C494-496			CK73FB1E104K	CHIP C	0.10UF	K	
C497-499			CK73FB1H103K	CHIP C	0.010UF	K	
C502			CK73FB1E473K	CHIP C	0.047UF	K	
C503			CK73FB1H102K	CHIP C	1000PF	K	
C504,505			CK73FB1E473K	CHIP C	0.047UF	K	
C506			CK73FB1E223K	CHIP C	0.022UF	K	
C507			CK73FB1H681K	CHIP C	680PF	K	
C508,509			CK73FB1E473K	CHIP C	0.047UF	K	
C510,511			CK73FB1E223K	CHIP C	0.022UF	K	
C512			CE04EW1C100M	ELECTRO	10UF	16WV	
C513			CC45FSL2H151J	CERAMIC	150PF	J	
C514,515			CK73FB1E223K	CHIP C	0.022UF	K	
C516			CE04EW1E101M	ELECTRO	100UF	25WV	
C517			CM93D2H681J	MICA	680PF	J	
C518,519			C91-1004-05	CHIP C	6800PF	J	
C520			CK73FB1H102K	CHIP C	1000PF	K	
C521			CK73FB1E473K	CHIP C	0.047UF	K	
C522			CE04EW1C100M	ELECTRO	10UF	16WV	
C523			CK73FB1E223K	CHIP C	0.022UF	K	
C524			CE04EW1E470M	ELECTRO	47UF	25WV	
C525			CM73F2H122J	CHIP C	1200PF	J	
C526			CC45FSL2H151J	CERAMIC	150PF	J	
C527			CE04EW1E101M	ELECTRO	100UF	25WV	
C528,529			CK73FB1E104K	CHIP C	0.10UF	K	
C533			CM73F2H561J	CHIP C	560PF	J	
C550			CK73FB1E104K	CHIP C	0.10UF	K	
C551			CK73FB1H103K	CHIP C	0.010UF	K	
C552,553			CK73FB1H102K	CHIP C	1000PF	K	
C554			CK73FB1H223K	CHIP C	0.022UF	K	
C557			CK73FB1H102K	CHIP C	1000PF	K	
C558			CK73FB1H103K	CHIP C	0.010UF	K	
C559			CK73FB1E104K	CHIP C	0.10UF	K	
C560-563		*	C91-1171-05	HV C	0.01UF	1KWV	
C601			CK73FB1H103K	CHIP C	0.010UF	K	
C602			CE04EW1E102M	ELECTRO	1000UF	25WV	
C603			CK73FB1H103K	CHIP C	0.010UF	K	
C605,606			CK73FB1H103K	CHIP C	0.010UF	K	
C608,609			CK73FB1E104K	CHIP C	0.10UF	K	
C610,611			CK73FB1E473K	CHIP C	0.047UF	K	
C612,613			CE04EW1E470M	ELECTRO	47UF	25WV	

PARTS LIST

FINAL UNIT (X45-351X-XX)

Ref. No.	Address	New parts	Parts No.	Description	Destination
C614			CE04EW1E102M	ELECTRO 1000UF 25WV	
C620			CK73FF1E104Z	CHIP C 0.10UF Z	
C621,622			CE04EW1E470M	ELECTRO 47UF 25WV	
C623			CK73FF1E104Z	CHIP C 0.10UF Z	
C701-711			CK73FB1H103K	CHIP C 0.010UF K	
C712			CE04EW1C471M	ELECTRO 470UF 16WV	
C713			CK73FB1E103K	CHIP C 0.010UF K	
C901			CK73FB1H103K	CHIP C 0.010UF K	
C903			CE04EW1H2R2M	ELECTRO 2.2UF 50WV	
TC1			C05-0030-15	TRIMMER CAPACITOR 20PF	
CN1,2			E04-0191-05	RF COAXIAL CABLE SOCKET	
CN3			E40-5469-05	FLAT CABLE CONNECTOR (12P)	
CN4			E40-5068-05	PIN CONNECTOR (11P)	
CN5			E23-0996-05	TERMINAL (TEST)	
CN301			E40-3238-05	PIN CONNECTOR (3P)	
CN302-305			E04-0191-05	RF COAXIAL CABLE SOCKET	
CN306,307			E23-0996-05	TERMINAL (TEST)	
CN401			E23-5745-05	FLAT CABLE CONNECTOR (20P)	
CN402			E40-5469-05	FLAT CABLE CONNECTOR (12P)	
CN403			E40-3242-05	PIN CONNECTOR (7P)	
CN404			E40-3237-05	PIN CONNECTOR (2P)	
CN405			E40-3239-05	PIN CONNECTOR (4P)	
CN406			E40-5470-05	FLAT CABLE CONNECTOR (13P)	
CN407			E40-3240-05	PIN CONNECTOR (5P)	
CN410			E04-0154-05	RF COAXIAL CABLE SOCKET	
CN411			E40-3239-05	PIN CONNECTOR (4P)	
CN412			E04-0154-05	RF COAXIAL CABLE SOCKET	
CN413			E40-3238-05	PIN CONNECTOR (3P)	
CN501,502			E04-0191-05	RF COAXIAL CABLE SOCKET	
CN503			E40-3240-05	PIN CONNECTOR (5P)	
CN504			E40-3238-05	PIN CONNECTOR (3P)	
CN505-507			E23-0996-05	TERMINAL (TEST)	
CN601			E40-3238-05	PIN CONNECTOR (3P)	
CN602			E40-3239-05	PIN CONNECTOR (4P)	
CN603			E40-5470-05	FLAT CABLE CONNECTOR (13P)	
CN604			E40-3240-05	PIN CONNECTOR (5P)	
CN605			E40-3237-05	PIN CONNECTOR (2P)	
W1	1J,2K	*	E37-0539-05	LEAD WIRE WITH CONNECTOR	
W501	1J,2J	*	E37-0525-05	LEAD WIRE WITH TERMINALR	
W502	2J		E37-0067-05	LEAD WIRE WITH MINIPIN PLUG	
202	2G		F29-0014-05	INSULATING BUSH	
F401			F06-4029-05	FUSE (4A 250V) : C/5	
F601			F53-0093-05	FUSE (5A 125V) : D/5	
A401,402			J13-0075-05	FUSE CLIP : C/5	
CF451			L72-0319-05	CERAMIC FILTER (455KHZ)	
CF452			L72-0333-05	CERAMIC FILTER (455KHZ)	
CF453			L72-0366-05	CERAMIC FILTER (455KHZ)	
L1			L40-2221-33	SMALL FIXED INDUCTOR	
L2			L39-0480-15	TROIDAL COIL	
L3			L40-2221-33	SMALL FIXED INDUCTOR	
L4-10			L40-1015-48	SMALL FIXED INDUCTOR (100UH)	
L101			L39-0491-05	TROIDAL COIL (CORE : L92-0107-05)	
L102			L39-0492-05	TROIDAL COIL (CORE : L92-0107-05)	
L103			L39-0493-05	TROIDAL COIL (CORE : L92-0107-05)	
L104			L39-1223-05	TROIDAL COIL (CORE : L92-0107-05)	
L105			L39-1224-05	TROIDAL COIL (CORE : L92-0107-05)	
L106			L39-1225-05	TROIDAL COIL (CORE : L92-0107-05)	
L107			L39-1222-05	TROIDAL COIL (CORE : L92-0107-05)	

Ref. No.	Address	New parts	Parts No.	Description	Destination
L108			L39-1223-05	TROIDAL COIL (CORE : L92-0107-05)	
L109,110			L39-1221-05	TROIDAL COIL (CORE : L92-0108-05)	
L111			L34-1279-05	COIL	
L112			L34-1281-05	COIL	
L113			L34-1279-05	COIL	
L114			L34-1280-05	COIL	
L115			L34-1281-05	COIL	
L116			L34-1282-05	COIL	
L301,302			L40-1015-48	SMALL FIXED INDUCTOR (100UH)	
L303,304			L34-1035-05	COIL	
L401			L40-1015-48	SMALL FIXED INDUCTOR (100UH)	
L450			L40-2215-48	SMALL FIXED INDUCTOR (220UH)	
L451			L34-0943-05	COIL	
L452			L34-4255-05	COIL	
L453		*	L40-4711-15	SMALL FIXED INDUCTOR	
L454			L40-2221-33	SMALL FIXED INDUCTOR	
L455,456			L34-4254-05	COIL	
L457,458			L34-4255-05	COIL	
L460			L40-3395-48	SMALL FIXED INDUCTOR (3.3UH)	
L461-465			L40-1092-12	SMALL FIXED INDUCTOR	
L466			L40-1592-15	SMALL FIXED INDUCTOR	
L501		*	L40-1505-48	SMALL FIXED INDUCTOR (15UH)	
L502			L40-3395-48	SMALL FIXED INDUCTOR (3.3UH)	
L503			L39-0481-05	TROIDAL COIL	
L504			L33-0617-15	CHOKE COIL	
L505,506			L33-0699-05	CHOKE COIL	
L507			L39-1257-05	TROIDAL COIL	
L508,509			L33-0617-15	CHOKE COIL	
L510			L39-0482-05	TROIDAL COIL	
L511			L33-0651-05	CHOKE COIL	
L512			L33-0617-15	CHOKE COIL	
L513			L39-1209-25	TROIDAL COIL	
L514		*	L40-1505-48	SMALL FIXED INDUCTOR (15UH)	
L515,516		*	L92-0150-05	TROIDAL CORE (W501)	
L520			L40-3985-48	SMALL FIXED INDUCTOR (390NH)	
L601			L40-1005-48	SMALL FIXED INDUCTOR (10UH)	
L602			L40-1092-12	SMALL FIXED INDUCTOR	
R	2G,2H		N67-3010-46	PAN HEAD SEMS SCREW	
K	2G,2H		N87-3006-46	BRAZIER HEAD TAPTITE SCREW	
R1			RK73FB2A100J	CHIP R 10 J 1/10W	
R2-5			RK73FB2A330J	CHIP R 33 J 1/10W	
R6-9			RK73FB2A270J	CHIP R 27 J 1/10W	
R10			RK73FB2A181J	CHIP R 180 J 1/10W	
R11-13			RK73FB2A101J	CHIP R 100 J 1/10W	
R14			RK73FB2A473J	CHIP R 47K J 1/10W	
R15			RK73FB2A103J	CHIP R 10K J 1/10W	
R20			RK73FB2A393J	CHIP R 39K J 1/10W	
R21			RK73FB2A223J	CHIP R 22K J 1/10W	
R22			RK73FB2A104J	CHIP R 100K J 1/10W	
R301-304			RK73FB2A104J	CHIP R 100K J 1/10W	
R305			RK73FB2A473J	CHIP R 47K J 1/10W	
R401			RK73FB2A100J	CHIP R 10 J 1/10W	
R402			RK73FB2A272J	CHIP R 2.7K J 1/10W	
R403,404			RK73FB2A273J	CHIP R 27K J 1/10W	
R405			RK73FB2A473J	CHIP R 47K J 1/10W	
R406			RK73FB2A150J	CHIP R 15 J 1/10W	
R407			RK73FB2A221J	CHIP R 220 J 1/10W	
R408			RK73FB2A101J	CHIP R 100 J 1/10W	

PARTS LSIT

FINAL UNIT (X45-351X-XX)

Ref. No.	Address	New parts	Parts No.	Description	Destination
R409,410			R92-1332-05	CHIP R 160 J 1W	
R411			RK73FB2A182J	CHIP R 1.8K J 1/10W	
R415			RK73FB2A101J	CHIP R 100 J 1/10W	
R416			RK73FB2A220J	CHIP R 22 J 1/10W	
R417			RK73FB2A101J	CHIP R 100 J 1/10W	
R418			RK73FB2A102J	CHIP R 1.0K J 1/10W	
R419			RK73FB2A104J	CHIP R 100K J 1/10W	
R420			RK73FB2A102J	CHIP R 1.0K J 1/10W	
R421			RK73FB2A393J	CHIP R 39K J 1/10W	
R422			RK73FB2A220J	CHIP R 22 J 1/10W	
R423,424			RK73FB2A331J	CHIP R 330 J 1/10W	
R425			RK73FB2A220J	CHIP R 22 J 1/10W	
R426			RK73FB2A103J	CHIP R 10K J 1/10W	
R427			RK73FB2A102J	CHIP R 1.0K J 1/10W	
R428			RK73FB2A222J	CHIP R 2.2K J 1/10W	
R429			RK73FB2A102J	CHIP R 1.0K J 1/10W	
R439			RK73FB2A470J	CHIP R 47 J 1/10W	
R440			RK73FB2A152J	CHIP R 1.5K J 1/10W	
R441,442			RK73FB2A332J	CHIP R 3.3K J 1/10W	
R443,444			RK73FB2A101J	CHIP R 100 J 1/10W	
R445,446			RK73FB2A472J	CHIP R 4.7K J 1/10W	
R447,448			RK73FB2A101J	CHIP R 100 J 1/10W	
R449,450			RK73FB2A222J	CHIP R 2.2K J 1/10W	
R451,452			RK73FB2A101J	CHIP R 100 J 1/10W	
R453			RK73FB2A152J	CHIP R 1.5K J 1/10W	
R454,455			RK73FB2A332J	CHIP R 3.3K J 1/10W	
R456			RK73FB2A333J	CHIP R 33K J 1/10W	
R457,458			RK73FB2A104J	CHIP R 100K J 1/10W	
R459			RK73FB2A471J	CHIP R 470 J 1/10W	
R460			RK73FB2A220J	CHIP R 22 J 1/10W	
R461			RK73FB2A102J	CHIP R 1.0K J 1/10W	
R462			RK73FB2A101J	CHIP R 100 J 1/10W	
R463,464			RK73FB2A151J	CHIP R 150 J 1/10W	
R465,466			RK73FB2A471J	CHIP R 470 J 1/10W	
R467-470			RK73FB2A330J	CHIP R 33 J 1/10W	
R471			RK73FB2A102J	CHIP R 1.0K J 1/10W	
R472			RK73FB2A104J	CHIP R 100K J 1/10W	
R473			RK73FB2A473J	CHIP R 47K J 1/10W	
R474			RK73FB2A104J	CHIP R 100K J 1/10W	
R475			RK73FB2A473J	CHIP R 47K J 1/10W	
R476			RK73FB2A472J	CHIP R 4.7K J 1/10W	
R480			RK73FB2A470J	CHIP R 47 J 1/10W	
R481			RK73FB2A471J	CHIP R 470 J 1/10W	
R482			RK73FB2A330J	CHIP R 33 J 1/10W	
R483			RK73FB2A221J	CHIP R 220 J 1/10W	
R484			RK73FB2A223J	CHIP R 22K J 1/10W	
R485			RK73FB2A822J	CHIP R 8.2K J 1/10W	
R486			RK73FB2A560J	CHIP R 56 J 1/10W	
R487-489			RK73FB2A223J	CHIP R 22K J 1/10W	
R490			RK73FB2A681J	CHIP R 680 J 1/10W	
R491,492			RK73FB2A471J	CHIP R 470 J 1/10W	
R501			RK73FB2A101J	CHIP R 100 J 1/10W	
R502			RK73FB2A331J	CHIP R 330 J 1/10W	
R503			RK73FB2A681J	CHIP R 680 J 1/10W	
R504			RK73FB2A331J	CHIP R 330 J 1/10W	
R505,506			RK73FB2A6R8J	CHIP R 6.8 J 1/10W	
R507			RK73FB2A681J	CHIP R 680 J 1/10W	
R508,509			R92-0696-05	CHIP R 33 J 1/4W	
R510			RK73FB2A331J	CHIP R 330 J 1/10W	

Ref. No.	Address	New parts	Parts No.	Description	Destination
R511			RK73FB2A151J	CHIP R 150 J 1/10W	
R512,513			R92-1318-05	CHIP R 100 J 1W	
R514-517			RS14DB3A5R6J	FL-PROOF RS 5.6 J 1W	
R518,519			RS14DB3A150J	FL-PROOF RS 15 J 1W	
R520			RK73FB2A561J	CHIP R 560 J 1/10W	
R521,522			RS14DB3A5R6J	FL-PROOF RS 5.6 J 1W	
R530		*	R92-2543-05	FIXED RESISTOR 6.8 1/2W	
R601			RK73FB2A472J	CHIP R 4.7K J 1/10W	
R701			RK73FB2A103J	CHIP R 10K J 1/10W	
R702			RK73FB2A101J	CHIP R 100 J 1/10W	
R703-705			RK73FB2A562J	CHIP R 5.6K J 1/10W	
R706			RK73FB2A472J	CHIP R 4.7K J 1/10W	
R707			RK73FB2A821J	CHIP R 820 J 1/10W	
R708			RK73FB2A272J	CHIP R 2.7K J 1/10W	
R709			RK73FB2A333J	CHIP R 33K J 1/10W	
R710			R92-1282-05	CHIP R 10 J 1W	
R712			R92-1316-05	CHIP R 39 J 1W	
R713			RK73FB2A471J	CHIP R 470 J 1/10W	
R714			RK73FB2A153J	CHIP R 15K J 1/10W	
VR1			R12-6730-05	TRIMMING POT. 220	
VR501,502			R12-6734-05	TRIMMING POT. 1K	
W301			R92-0150-05	JUMPER REST 0 OHM (ANT1)	
W303			R92-0150-05	JUMPER REST 0 OHM (ANT2)	
K1-14			S51-1420-05	RELAY	
K301			S51-2417-05	RELAY	
K302			S51-1429-05	RELAY	
K601			S51-2423-05	RELAY	
D1,2			1SS101	DIODE	
D3			RLZJ5.1B	ZENER DIODE	
D4-10			LFB01	DIODE	
D11			DAP202K	DIODE	
D301,302			DSA301LA	DIODE	
D303,304			LFB01	DIODE	
D401			1SS226	DIODE	
D402		*	RD9.1M(B2)	ZENER DIODE	
D450			DAN235K	DIODE	
D451-456			1SV128	DIODE	
D457			DAN235K	DIODE	
D501			MA27T-B	DIODE	
D502,503			SV03YS	DIODE	
D504			SG-5L(R)	DIODE	
D601			LFB01	DIODE	
D701			DAN202K	DIODE	
D702			LFB01	DIODE	
IC1			TC9174F	IC (CMOS I/O EXTENSION)	
IC402			UPC7805H	IC (VOLTAGE REGULATOR/ +5V)	
IC601,602			UPC7808H	IC (VOLTAGE REGULATOR/ +8V)	
IC701			NJM2904M	IC (OP AMP X2)	
Q1-4			FMA7	TRANSISTOR	
Q5			DTC114EK	DIGITAL TRANSISTOR	
Q6			FMC2	TRANSISTOR	
Q10-16			DTB143EK	DIGITAL TRANSISTOR	
Q401			2SA1162(Y)	TRANSISTOR	
Q402,403			2SC2712(Y)	TRANSISTOR	
Q404			2SD1624(S)	TRANSISTOR	
Q405			2SD1406(Y)	TRANSISTOR	
Q460,461			3SK131(M)	FET	
Q470,471			3SK131(M)	FET	

PARTS LIST

FINAL UNIT (X45-351X-XX)
AT UNIT (X53-3340-02)

Ref. No.	Address	New parts	Parts No.	Description	Destination
Q472			2SC2712(Y)	TRANSISTOR	
Q475			3SK131(M)	FET	
Q501			2SC1971	TRANSISTOR	
Q502,503			2SC3133	TRANSISTOR	
Q504			2SD1406(Y)	TRANSISTOR	
Q505,506			2SC2879	TRANSISTOR	
Q507			2SD1406(Y)	TRANSISTOR	
Q601			DTC143TK	DIGITAL TRANSISTOR	
Q701			DTC114TK	DIGITAL TRANSISTOR	
Q702,703			DTD114EK	DIGITAL TRANSISTOR	
TH452			157-502-53002	THERMISTOR 5K	
TH701			5TP-41S	THERMISTOR	

AT UNIT (X53-3340-02)

C1			CC45FSL2H330J	CERAMIC	33PF	J
C2-8			CK73FB1E103K	CHIP C	0.010UF	K
C9,10			CK73FB1H102K	CHIP C	1000PF	K
C11			CK73FB1E103K	CHIP C	0.010UF	K
C12			CE04EW1C470M	ELECTRO	47UF	16WV
C13-15			CK73FB1E103K	CHIP C	0.010UF	K
C16			CK73EF1E474Z	CHIP C	0.47UF	Z
C17-19			CK73FB1E103K	CHIP C	0.010UF	K
C20			CE04EW1C101M	ELECTRO	100UF	16WV
C21-23			CK73FB1E103K	CHIP C	0.010UF	K
C24			CK73EF1E474Z	CHIP C	0.47UF	Z
C25			CK73FB1E103K	CHIP C	0.010UF	K
C26			CE04EW1C101M	ELECTRO	100UF	16WV
C27-37			CK73FB1E103K	CHIP C	0.010UF	K
C38			CK73FB1H103K	CHIP C	0.010UF	K
C101-103			CK73FB1H103K	CHIP C	0.010UF	K
C105-108			CK73FB1H103K	CHIP C	0.010UF	K
TC1			C05-0031-15	TRIMMER CAPACITOR	10PF	
VC1,2	2L		C02-0023-05	VARIABLE CAPACITOR	300PF	
A5	3L		D40-0633-15	GEAR ASSY		
CN1,2			E04-0157-05	RF COAXIAL CABLE SOCKET		
CN3			E40-3239-05	PIN CONNECTOR (4P)		
CN4			E40-3240-05	PIN CONNECTOR (5P)		
CN5			E40-3238-05	PIN CONNECTOR (3P)		
CN6			E40-3237-05	PIN CONNECTOR (2P)		
CN7			E40-5068-05	PIN CONNECTOR (11P)		
CN101			E40-5066-05	PIN CONNECTOR (9P)		
–			F20-1081-04	INSULATING SHEET		
A1	2M		F11-1142-22	SHIELDING CASE		
A2	2M		F10-1401-23	SHIELDING PLATE		
A3	1M		F11-1143-14	SHIELDING COVER		
A4	2M		F11-1144-14	SHIELDING COVER		
A6	1M	*	F10-2192-04	SHIELDING COVER		
–			J61-0307-05	BAND		
L1			L39-0496-05	COIL		
L2			L39-0415-25	COIL		
L3-6			L40-1011-13	SMALL FIXED INDUCTOR		
L7-11			L40-1011-14	SMALL FIXED INDUCTOR		
L12-14			L40-1011-13	SMALL FIXED INDUCTOR		
L101-103			L40-1011-14	SMALL FIXED INDUCTOR		
L105-108			L40-1011-14	SMALL FIXED INDUCTOR		
L109			L34-1276-15	COIL		
L110			L39-0479-05	COIL		
L111			L39-0495-05	COIL		
L112			L39-0494-15	COIL		
T110-112			L92-0117-05	TROIDAL CORE		
K	1M,2M		N87-3006-46	BRAZIER HEAD TAPTITE SCREW		
S	1M,2M		N88-3006-46	FLAT HEAD TAPTITE SCREW		
R1,2			RD14BB2E101J	RD	100	J 1/4W
R3			RK73FB2A102J	CHIP R	1.0K	J 1/10W
R4			RD14BB2E560J	RD	56	J 1/4W
R5,6			RK73FB2A181J	CHIP R	180	J 1/10W
R7-10			RK73FB2A103J	CHIP R	10K	J 1/10W
R11			RK73FB2A563J	CHIP R	56K	J 1/10W
R12			RK73FB2A121J	CHIP R	120	J 1/10W
R13			RK73FB2A101J	CHIP R	100	J 1/10W
R14			RK73FB2A563J	CHIP R	56K	J 1/10W
R15			RK73FB2A121J	CHIP R	120	J 1/10W
R16			RK73FB2A101J	CHIP R	100	J 1/10W
R17			RK73FB2A330J	CHIP R	33	J 1/10W
R18			RK73FB2A103J	CHIP R	10K	J 1/10W
R19			RK73FB2A330J	CHIP R	33	J 1/10W
R20-23			RK73FB2A103J	CHIP R	10K	J 1/10W
R24,25			RD14BB2E100J	RD	10	J 1/4W
R26-30			RK73FB2A103J	CHIP R	10K	J 1/10W
R31			RK73FB2A472J	CHIP R	4.7K	J 1/10W
R32			RK73FB2A103J	CHIP R	10K	J 1/10W
R33			RD14BB2E101J	RD	100	J 1/4W
R34			RK73FB2A472J	CHIP R	4.7K	J 1/10W
VR101,102	3L		R01-3435-05	POTENTIOMETER	10K	
W12-17			R92-0679-05	CHIP R	0 OHM	
W18-28			R92-0670-05	CHIP R	0 OHM	
W29-31			R92-0679-05	CHIP R	0 OHM	
W32			R92-0670-05	CHIP R	0 OHM	
W34			R92-0670-05	CHIP R	0 OHM	
W35,36			R92-0679-05	CHIP R	0 OHM	
W37			R92-0670-05	CHIP R	0 OHM	
W40	2B	*	E33-1984-05	PROCESSED WIRE KIT (to FIL:CN4)		
W40	2B	*	E33-1984-05	PROCESSED WIRE KIT (to CONT:CN4)		
W40	2B	*	E33-1984-05	PROCESSED WIRE KIT (to RL:AT1)		
W40	2B	*	E33-1984-05	PROCESSED WIRE KIT (to RL:AT2)		
K1			S51-2407-05	RELAY		
K101-103			S76-0401-05	RELAY		
K105-108			S76-0401-05	RELAY		
M1,2	3L		T42-0453-05	DC MOTOR		
D1,2			1SS101	DIODE		
D3-8			1SS226	DIODE		
D10			1S1555	DIODE		
D101-103			1S1555	DIODE		
D105-108			1S1555	DIODE		
D109,110			RLS73	DIODE		
IC1			SN74S74N	IC (ONE SHOT MULTI)		
IC2,3			TC4066BP	IC (ANALOG/ DIGITAL SW)		
IC4,5			BA6109U2	IC (MOTOR DRIVER)		
IC6			NJM2903S	IC (DUAL COMPALATOR)		
IC7			MC78L05M	IC (VOLTAGE REGULATOR/ +5V)		

PARTS LSIT

AT UNIT (X53-3340-02)
CONTROL UNIT (X53-356X-XX)

Ref. No.	Address	New parts	Parts No.	Description	Destination
Q1,2			2SC2714(Y)	TRANSISTOR	
Q3			DTC114EK	DIGITAL TRANSISTOR	
Q4			2SA1204(Y)	TRANSISTOR	
Q5			DTC114EK	DIGITAL TRANSISTOR	
CONTROL UNIT (X53-356X-XX) 0-11 : K,P 0-21 : M 0-22 : M2 0-71 : X 2-71 : E 2-72 : E2 2-73 : E3 2-74 : E9					
C1,2			CK73GB1H102K	CHIP C 1000PF K	
C3			C92-0044-05	CHIP-ELE 47UF 10WV	
C4			CK73GB1H102K	CHIP C 1000PF K	
C5			C92-0032-05	CHIP-ELE 4.7UF 25WV	
C6,7			CK73GF1E104Z	CHIP C 0.10UF Z	
C8			C92-0037-05	CHIP-ELE 10UF 16WV	
C9			C92-0032-05	CHIP-ELE 4.7UF 25WV	
C10,11			CK73GF1E104Z	CHIP C 0.10UF Z	
C12			C92-0037-05	CHIP-ELE 10UF 16WV	
C13			C92-0032-05	CHIP-ELE 4.7UF 25WV	
C14,15			CK73GF1E104Z	CHIP C 0.10UF Z	
C16			C92-0037-05	CHIP-ELE 10UF 16WV	
C17-41			CK73GB1H102K	CHIP C 1000PF K	
C42			CK73GB1H103K	CHIP C 0.010UF K	
C43,44			CK73GB1H102K	CHIP C 1000PF K	
C45			C92-0044-05	CHIP-ELE 47UF 10WV	
C46,47			CK73GB1H103K	CHIP C 0.010UF K	
C48,49			CC73GCH1H330J	CHIP C 33PF J	
C50-54			CK73GB1H103K	CHIP C 0.010UF K	
C55			C92-0044-05	CHIP-ELE 47UF 10WV	
C56,57			CK73GF1E104Z	CHIP C 0.10UF Z	
C58			CK73GB1H103K	CHIP C 0.010UF K	
C59			C92-0044-05	CHIP-ELE 47UF 10WV	
C60			CK73GB1H103K	CHIP C 0.010UF K	
C61			C92-0044-05	CHIP-ELE 47UF 10WV	
C62-77			CC73GCH1H101J	CHIP C 100PF J	
C78-80			CK73GB1H103K	CHIP C 0.010UF K	
C81-88			CC73GCH1H101J	CHIP C 100PF J	
C89-93			CK73GB1H103K	CHIP C 0.010UF K	
C94-96			C92-0037-05	CHIP-ELE 10UF 16WV	
C97			C92-0044-05	CHIP-ELE 47UF 10WV	
C98-102			CK73GB1H103K	CHIP C 0.010UF K	
C103,104			CC73GCH1H220J	CHIP C 22PF J	
C105-107			CK73GB1H103K	CHIP C 0.010UF K	
C108			C92-0044-05	CHIP-ELE 47UF 10WV	
C109,110			CK73GB1H103K	CHIP C 0.010UF K	
C111-113			C92-0023-05	CHIP-ELE 1.0UF 50WV	
C114			CK73GB1H103K	CHIP C 0.010UF K	
C115			C92-0023-05	CHIP-ELE 1.0UF 50WV	
C116,117			CK73GB1H103K	CHIP C 0.010UF K	
C118-124			CK73GB1H102K	CHIP C 1000PF K	
C125,126			CK73GB1H103K	CHIP C 0.010UF K	
C127-141			CC73GCH1H101J	CHIP C 100PF J	
C142-147			CK73GB1H102K	CHIP C 1000PF K	
C148-150			CC73GCH1H101J	CHIP C 100PF J	
C152			CC73GCH1H101J	CHIP C 100PF J	
C153-175			CK73GB1H102K	CHIP C 1000PF K	
C177-183			CK73GB1H102K	CHIP C 1000PF K	
C184-187			CK73GB1H103K	CHIP C 0.010UF K	
C188-223			CK73GB1H102K	CHIP C 1000PF K	
C224,225			CC73GSL1H471J	CHIP C 470PF J	

Ref. No.	Address	New parts	Parts No.	Description	Destination
C226,227			CK73GB1H103K	CHIP C 0.010UF K	
C228,229			CK73GB1H102K	CHIP C 1000PF K	
C230			CK73GB1H103K	CHIP C 0.010UF K	
C231-233			CK73GB1H102K	CHIP C 1000PF K	
C501-509			CK73GB1H103K	CHIP C 0.010UF K	
C511-521			CK73GB1H103K	CHIP C 0.010UF K	
C522			CK73GB1H102K	CHIP C 1000PF K	
C523			CK73GF1E104Z	CHIP C 0.10UF Z	
C601-604			CK73GB1H103K	CHIP C 0.010UF K	
C605			CK73GF1E104Z	CHIP C 0.10UF Z	
C606			CK73GB1H102K	CHIP C 1000PF K	
401	1D		E23-0623-04	EARTH LUG	
CN1,2		*	E40-5744-05	FLAT CABLE CONNECTOR (20P)	
CN3			E40-3239-05	PIN CONNECTOR (4P)	
CN4		*	E40-5763-05	PIN CONNECTOR (12P)	
CN5		*	E40-5744-05	FLAT CABLE CONNECTOR (20P)	
CN6			E40-5761-05	FLAT CABLE CONNECTOR (26P)	
CN7		*	E40-5742-05	FLAT CABLE CONNECTOR (13P)	
CN8		*	E40-5739-05	FLAT CABLE CONNECTOR (10P)	
CN9,10		*	E40-5740-05	FLAT CABLE CONNECTOR (20P)	
CN11		*	E40-5744-05	FLAT CABLE CONNECTOR (20P)	
CN12			E02-2015-05	SOCKET FOR IC	
CN501		*	E40-5740-05	FLAT CABLE CONNECTOR (20P)	
CN601			E40-3251-05	PIN CONNECTOR (7P)	
J601			E06-0858-15	CYLINDRICAL RECEPTACLE (8P MIC)	
A1	3G	*	F01-1007-04	HEAT SINK	
402	3G		G02-0574-04	FLAT SPRING	
403	2A	*	J19-1570-05	HOLDER (BATT)	
L1-3			L40-4705-48	SMALL FIXED INDUCTOR (47UH)	
L4,5			L40-1292-18	SMALL FIXED INDUCTOR	
L6,7			L40-4705-48	SMALL FIXED INDUCTOR (47UH)	
L8			L40-1292-18	SMALL FIXED INDUCTOR	
L11-25			L40-4705-48	SMALL FIXED INDUCTOR (47UH)	
L26,27			L40-1005-48	SMALL FIXED INDUCTOR (10UH)	
L28			L40-4705-48	SMALL FIXED INDUCTOR (47UH)	
X1		*	L77-1589-05	CRYSTAL RESONATOR (11.0592MHZ)	
X2			L78-0325-05	RESONATOR (2.0MHZ)	
G	3G		N32-2606-46	FLAT HEAD MACHIN SCREW	
R1,2			RK73GB1J101J	CHIP R 100 J 1/16W	
R3,4			RK73GB1J102J	CHIP R 1.0K J 1/16W	
R5			RK73GB1J101J	CHIP R 100 J 1/16W	
R6			RK73GB1J473J	CHIP R 47K J 1/16W	
R7-9			RK73GB1J102J	CHIP R 1.0K J 1/16W	
R10-28			RK73GB1J101J	CHIP R 100 J 1/16W	
R29			RK73GB1J105J	CHIP R 1.0M J 1/16W	
R30-37			RK73GB1J101J	CHIP R 100 J 1/16W	
R39			RK73GB1J102J	CHIP R 1.0K J 1/16W	
R40			RK73GB1J471J	CHIP R 470 J 1/16W	
R41			RK73GB1J103J	CHIP R 10K J 1/16W	
R42			RK73GB1J222J	CHIP R 2.2K J 1/16W	
R43,44			RK73GB1J104J	CHIP R 100K J 1/16W	
R45			RK73GB1J472J	CHIP R 4.7K J 1/16W	
R46			RK73GB1J102J	CHIP R 1.0K J 1/16W	
R47			RK73GB1J473J	CHIP R 47K J 1/16W	
R48			RK73GB1J102J	CHIP R 1.0K J 1/16W	X

PARTS LIST

CONTROL UNIT (X53-356X-XX)

Ref. No.	Address	New parts	Parts No.	Description	Destination
R49			RK73GB1J473J	CHIP R 47K J 1/16W	
R51			RK73GB1J473J	CHIP R 47K J 1/16W	
R52			RK73GB1J103J	CHIP R 10K J 1/16W	
R53			RK73GB1J102J	CHIP R 1.0K J 1/16W	E3E9M
R54			RK73GB1J473J	CHIP R 47K J 1/16W	
R55,56			RK73GB1J103J	CHIP R 10K J 1/16W	
R57			RK73GB1J102J	CHIP R 1.0K J 1/16W	EE2E3E9
R58			RK73GB1J473J	CHIP R 47K J 1/16W	
R59-68			RK73GB1J103J	CHIP R 10K J 1/16W	
R69			RK73GB1J102J	CHIP R 1.0K J 1/16W	E2MM2
R70			RK73GB1J473J	CHIP R 47K J 1/16W	
R71,72			RK73GB1J103J	CHIP R 10K J 1/16W	
R73			RK73GB1J102J	CHIP R 1.0K J 1/16W	E
R74			RK73GB1J473J	CHIP R 47K J 1/16W	
R75-85			RK73GB1J103J	CHIP R 10K J 1/16W	
R86,87			RK73GB1J472J	CHIP R 4.7K J 1/16W	
R88			RK73GB1J153J	CHIP R 15K J 1/16W	
R89			RK73GB1J334J	CHIP R 330K J 1/16W	
R90-92			RK73GB1J153J	CHIP R 15K J 1/16W	
R93			RK73GB1J103J	CHIP R 10K J 1/16W	
R94,95			RK73GB1J153J	CHIP R 15K J 1/16W	
R96			RK73GB1J105J	CHIP R 1.0M J 1/16W	
R97			RK73GB1J102J	CHIP R 1.0K J 1/16W	
R98			RK73GB1J473J	CHIP R 47K J 1/16W	
R99			RK73GB1J102J	CHIP R 1.0K J 1/16W	
R100-105			RK73GB1J105J	CHIP R 1.0M J 1/16W	
R107			RK73GB1J105J	CHIP R 1.0M J 1/16W	
R108-119			RK73GB1J104J	CHIP R 100K J 1/16W	
R120-130			RK73GB1J101J	CHIP R 100 J 1/16W	
R131			RK73GB1J102J	CHIP R 1.0K J 1/16W	
R132,133			RK73GB1J103J	CHIP R 10K J 1/16W	
R134-137			RK73GB1J101J	CHIP R 100 J 1/16W	
R138-140			RK73GB1J101J	CHIP R 100 J 1/16W	
R141-144			RK73GB1J102J	CHIP R 1.0K J 1/16W	
R145			RK73GB1J223J	CHIP R 22K J 1/16W	
R146,147			RK73GB1J473J	CHIP R 47K J 1/16W	
R148-150			RK73GB1J101J	CHIP R 100 J 1/16W	
R152-169			RK73GB1J101J	CHIP R 100 J 1/16W	
R170			RK73GB1J474J	CHIP R 470K J 1/16W	
R171			RK73GB1J102J	CHIP R 1.0K J 1/16W	
R172-177			RK73GB1J101J	CHIP R 100 J 1/16W	
R179-201			RK73GB1J101J	CHIP R 100 J 1/16W	
R202			RK73GB1J473J	CHIP R 47K J 1/16W	
R203-214			RK73GB1J101J	CHIP R 100 J 1/16W	
R215			RK73GB1J473J	CHIP R 47K J 1/16W	
R216-222			RK73GB1J101J	CHIP R 100 J 1/16W	
R223			RK73GB1J333J	CHIP R 33K J 1/16W	
R224			RK73GB1J101J	CHIP R 100 J 1/16W	
R225			RK73GB1J473J	CHIP R 47K J 1/16W	
R226			RK73GB1J104J	CHIP R 100K J 1/16W	
R227-234			RK73GB1J103J	CHIP R 10K J 1/16W	
R235-237			RK73GB1J102J	CHIP R 1.0K J 1/16W	
R238-240			RK73GB1J101J	CHIP R 100 J 1/16W	
R241			RK73GB1J473J	CHIP R 47K J 1/16W	
R242,243			RK73GB1J102J	CHIP R 1.0K J 1/16W	
R244			RK73GB1J101J	CHIP R 100 J 1/16W	KPMXE
R244			RK73GB1J101J	CHIP R 100 J 1/16W	E2E3E9
R245			RK73GB1J473J	CHIP R 47K J 1/16W	
R501-504			RK73GB1J473J	CHIP R 47K J 1/16W	

Ref. No.	Address	New parts	Parts No.	Description	Destination
R505			RK73GB1J391J	CHIP R 390 J 1/16W	
R506			RK73GB1J271J	CHIP R 270 J 1/16W	
R507			RK73GB1J473J	CHIP R 47K J 1/16W	
R508			RK73GB1J391J	CHIP R 390 J 1/16W	
R509			RK73GB1J271J	CHIP R 270 J 1/16W	
R510			RK73GB1J391J	CHIP R 390 J 1/16W	
R511			RK73GB1J271J	CHIP R 270 J 1/16W	
R512			RK73GB1J391J	CHIP R 390 J 1/16W	
R513			RK73GB1J271J	CHIP R 270 J 1/16W	
R514			RK73GB1J473J	CHIP R 47K J 1/16W	
R515			RK73GB1J391J	CHIP R 390 J 1/16W	
R516			RK73GB1J271J	CHIP R 270 J 1/16W	
R517			RK73GB1J391J	CHIP R 390 J 1/16W	
R518			RK73GB1J271J	CHIP R 270 J 1/16W	
R519			RK73GB1J391J	CHIP R 390 J 1/16W	
R520			RK73GB1J271J	CHIP R 270 J 1/16W	
R521-523			RK73GB1J473J	CHIP R 47K J 1/16W	
R524			RK73GB1J102J	CHIP R 1.0K J 1/16W	
R525			RK73GB1J473J	CHIP R 47K J 1/16W	
R526-527			RK73GB1J101J	CHIP R 100 J 1/16W	
R528			RK73GB1J391J	CHIP R 390 J 1/16W	
R529			RK73GB1J271J	CHIP R 270 J 1/16W	
R530			RK73GB1J391J	CHIP R 390 J 1/16W	
R531			RK73GB1J271J	CHIP R 270 J 1/16W	
R532			RK73GB1J391J	CHIP R 390 J 1/16W	
R533			RK73GB1J271J	CHIP R 270 J 1/16W	
R534			RK73GB1J391J	CHIP R 390 J 1/16W	
R535			RK73GB1J271J	CHIP R 270 J 1/16W	
R536-539			RK73GB1J101J	CHIP R 100 J 1/16W	
R540			RK73GB1J473J	CHIP R 47K J 1/16W	
R541,542			RK73GB1J101J	CHIP R 100 J 1/16W	
R543-546			RK73GB1J473J	CHIP R 47K J 1/16W	
R547,548			RK73GB1J103J	CHIP R 10K J 1/16W	
R549-555			RK73GB1J473J	CHIP R 47K J 1/16W	
R556			RK73GB1J103J	CHIP R 10K J 1/16W	
S1			S62-0412-05	SLIDE SWITCH	
S501-545		*	S70-0439-05	TACT SWITCH	
S546-551		*	S70-0439-05	TACT SWITCH	
D1-3			1SS355	DIODE	
D4		*	RD7.5M(B3)	ZENER DIODE	
D5-12			1SS355	DIODE	
D501			B30-2036-05	LED (RED)	
D502		*	B30-2146-05	LED (ORANGE)	
D510-519		*	B30-2146-05	LED (ORANGE)	
IC1,2			UPC7805H	IC (VOLTAGE REGULATOR/ +5V)	
IC3			TA78L08F	IC (VOLTAGE REGULATOR)	
IC4			AT2402N10SI2.7	IC (2kbit SERIAL EEPROMM)	
IC5			MB3780A	IC (BATTERY BACKUP)	
IC6		*	M37702S4BFP	IC	
IC7			TC7S04F	IC (2CH NAND GATE)	
IC8			LC3564QMF-10	IC	
IC9			TC4052BF	IC (4CH MPX/DE-MPX)	
IC10			TC7S04F	IC (2CH NAND GATE)	
IC11		*	TC74VHC32F	IC	
IC12		*	27C512RJLVC	IC	
IC13			TC4052BF	IC (4CH MPX/DE-MPX)	
IC14		*	TC74VHC08F	IC	
IC15		*	TC74VHC245F	IC	

PARTS LSIT

CONTROL UNIT (X53-356X-XX)
TX-RX UNIT (X57-4620-00)

Ref. No.	Address	New parts	Parts No.	Description			Destination
IC16			CXD1095Q	IC (I/O EXPANDER)			
IC17,18		*	TC74VHC138F	IC			
IC19		*	TC74VHC573F	IC			
IC20,21			LZ92K371	IC (ENCODER PROCESSOR)			
IC22,23			CXD1095Q	IC (I/O EXPANDER)			
IC24		*	68HC05G2419553	IC			
IC25,26			TC4584BF	IC (BUFF)			
IC27		*	ADM232LAR	IC			
IC28			NJM2904M	IC (OP AMP X2)			
IC29			TC7S32F	IC (2CH NAND GATE)			
IC501-504			UPD6345GS	IC			
Q1			DTA143EK	DIGITAL TRANSISTOR			
Q2			DTC143EK	DIGITAL TRANSISTOR			
Q3,4			DTC114EK	DIGITAL TRANSISTOR			
Q5			DTC143EK	DIGITAL TRANSISTOR			
Q6-11			DTC114EK	DIGITAL TRANSISTOR			
Q12,13			DTA143EK	DIGITAL TRANSISTOR			
Q14-22			DTC143EK	DIGITAL TRANSISTOR			
Q23,24			DTA143EK	DIGITAL TRANSISTOR			
Q27,28			DTC114EK	DIGITAL TRANSISTOR			
Q29-31			DTC143TK	DIGITAL TRANSISTOR			
Q33			DTC143EK	DIGITAL TRANSISTOR			
Q501,502			DTC114EK	DIGITAL TRANSISTOR			
TX-RX UNIT (X57-4620-00)							
C1			C90-2045-05	ELECTRO	2.2UF	25WV	
C2,3			CK73FF1E104Z	CHIP C	0.10UF	Z	
C4,5			CC73FCH1H330J	CHIP C	33PF	J	
C6			C90-2045-05	ELECTRO	2.2UF	25WV	
C7,8			CK73FF1E104Z	CHIP C	0.10UF	Z	
C9-14			CC73FCH1H330J	CHIP C	33PF	J	
C15			CC73FSL1H152J	CHIP C	1500PF	J	
C16			CC73FCH1H101J	CHIP C	100PF	J	
C17			CC73FSL1H152J	CHIP C	1500PF	J	
C18			CC73FCH1H101J	CHIP C	100PF	J	
C19-22			CK73FF1E104Z	CHIP C	0.10UF	Z	
C23			C90-2045-05	ELECTRO	2.2UF	25WV	
C24			CK73FB1H223K	CHIP C	0.022UF	K	
C25			CK73FF1E104Z	CHIP C	0.10UF	Z	
C26,27			CK73FB1H223K	CHIP C	0.022UF	K	
C28			C90-2045-05	ELECTRO	2.2UF	25WV	
C29			CK73FF1E104Z	CHIP C	0.10UF	Z	
C30			CK73GB1H102K	CHIP C	1000PF	K	
C31			CK73FB1H471K	CHIP C	470PF	K	
C32			CK73FF1E104Z	CHIP C	0.10UF	Z	
C33			CK73GB1H102K	CHIP C	1000PF	K	
C34			C90-2045-05	ELECTRO	2.2UF	25WV	
C36			CC73GCH1H330J	CHIP C	33PF	J	
C37			CK73GB1H102K	CHIP C	1000PF	K	
C38			CK73GB1H103K	CHIP C	0.010UF	K	
C39,40			CK73FB1H102K	CHIP C	1000PF	K	
C41			C90-2045-05	ELECTRO	2.2UF	25WV	
C42			CK73FB1H103K	CHIP C	0.010UF	K	
C44			CK73GB1H102K	CHIP C	1000PF	K	
C45			CC73FCH1H121J	CHIP C	120PF	J	
C46			CK73GB1H102K	CHIP C	1000PF	K	
C50			CK73GB1H102K	CHIP C	1000PF	K	

Ref. No.	Address	New parts	Parts No.	Description			Destination
C52			CE04EW1C470M	ELECTRO	47UF	16WV	
C53			CK73GB1E223K	CHIP C	0.022UF	K	
C54			CQ92M1H154K	MYLAR	0.15UF	K	
C55			CK73FB1H102K	CHIP C	1000PF	K	
C56			CE04EW1C101M	ELECTRO	100UF	16WV	
C57			CC73ECH1H202J	CHIP C	2000PF	J	
C58			CK73FB1H103K	CHIP C	0.010UF	K	
C59			CC73GCH1H680J	CHIP C	68PF	J	
C60			CC73GCH1H180J	CHIP C	18PF	J	
C61			CC73GCH1H060D	CHIP C	6.0PF	D	
C62			CC73GCH1H470J	CHIP C	47PF	J	
C63			CK73GB1H103K	CHIP C	0.010UF	K	
C64			CE04EW1C101M	ELECTRO	100UF	16WV	
C65,66			CK73GB1H102K	CHIP C	1000PF	K	
C67			CE04EW1C470M	ELECTRO	47UF	16WV	
C68,69			CK73GB1H102K	CHIP C	1000PF	K	
C100			CE04EW1C100M	ELECTRO	10UF	16WV	
C101			CK73FF1E104Z	CHIP C	0.10UF	Z	
C103			CE04EW1H010M	ELECTRO	1.0UF	50WV	
C104			CE04EW1C100M	ELECTRO	10UF	16WV	
C105			CK73GB1H102K	CHIP C	1000PF	K	
C106			CC73FCH1H102J	CHIP C	1000PF	J	
C107			CK73FF1E104Z	CHIP C	0.10UF	Z	
C108			CE04EW1C100M	ELECTRO	10UF	16WV	
C109			CK73FF1E104Z	CHIP C	0.10UF	Z	
C112			CC73FCH1H102J	CHIP C	1000PF	J	
C113,114			CQ92FM1H223K	MYLAR	0.022UF	K	
C116			CC73FCH1H102J	CHIP C	1000PF	J	
C118,119			CC73GCH1H271J	CHIP C	270PF	J	
C120			CE04EW1C100M	ELECTRO	10UF	16WV	
C121			CE04EW1H010M	ELECTRO	1.0UF	50WV	
C122			CC73FSL1H152J	CHIP C	1500PF	J	
C123			CC73GCH1H101J	CHIP C	100PF	J	
C124			CC73GCH1H221J	CHIP C	220PF	J	
C125			CK73GB1E223K	CHIP C	0.022UF	K	
C126			CE04EW1C100M	ELECTRO	10UF	16WV	
C127			CK73GB1H103K	CHIP C	0.010UF	K	
C128			CC73FSL1H221J	CHIP C	220PF	J	
C129			CC73FCH1H101J	CHIP C	100PF	J	
C130			CE04EW1C100M	ELECTRO	10UF	16WV	
C131			CK73FF1E104Z	CHIP C	0.10UF	Z	
C132			CE04EW1C100M	ELECTRO	10UF	16WV	
C133			CC73GCH1H101J	CHIP C	100PF	J	
C134			CK73GB1E223K	CHIP C	0.022UF	K	
C135			CE04EW1C100M	ELECTRO	10UF	16WV	
C136			CK73GB1E223K	CHIP C	0.022UF	K	
C137			CC73FCH1H102J	CHIP C	1000PF	J	
C138			CC73GCH1H221J	CHIP C	220PF	J	
C139			CC73GCH1H271J	CHIP C	270PF	J	
C140,141			CK73GB1E223K	CHIP C	0.022UF	K	
C142			CE04EW1C100M	ELECTRO	10UF	16WV	
C143			CK73GB1E223K	CHIP C	0.022UF	K	
C144		*	CQ92FM1H683K	MYLAR	0.068UF	K	
C145			CK73FB1E104K	CHIP C	0.10UF	K	
C146,147			CC73FCH1H102J	CHIP C	1000PF	J	
C150			CK73GB1E223K	CHIP C	0.022UF	K	
C151			CE04EW1C100M	ELECTRO	10UF	16WV	
C152			CC73FCH1H102J	CHIP C	1000PF	J	
C153			CC73GCH1H271J	CHIP C	270PF	J	

PARTS LIST

TX-RX UNIT (X57-4620-00)

Ref. No.	Address	New parts	Parts No.	Description			Destination
C154			CK73GB1E223K	CHIP C	0.022UF	K	
C155			CE04EW1C100M	ELECTRO	10UF	16WV	
C156			CK73FF1E104Z	CHIP C	0.10UF	Z	
C157			CK73GB1E223K	CHIP C	0.022UF	K	
C158			C90-2045-05	ELECTRO	2.2UF	25WV	
C159,160			CK73FF1E104Z	CHIP C	0.10UF	Z	
C161			CK73GB1E223K	CHIP C	0.022UF	K	
C162			CE04EW1C100M	ELECTRO	10UF	16WV	
C163			CK73FF1E104Z	CHIP C	0.10UF	Z	
C164			CE04EW1C100M	ELECTRO	10UF	16WV	
C165			CK73FF1E104Z	CHIP C	0.10UF	Z	
C166,167			CE04EW1C100M	ELECTRO	10UF	16WV	
C168,169			CK73FF1E104Z	CHIP C	0.10UF	Z	
C170			CK73GB1H103K	CHIP C	0.010UF	K	
C171-176			CE04EW1C100M	ELECTRO	10UF	16WV	
C177			CQ92M1H103K	MYLAR	0.010UF	K	
C178,179			CC73FSL1H152J	CHIP C	1500PF	J	
C180,181			CC73ECH1H202J	CHIP C	2000PF	J	
C182			CC73GCH1H331J	CHIP C	330PF	J	
C183-185			CC73FSL1H152J	CHIP C	1500PF	J	
C186			CE04EW1C100M	ELECTRO	10UF	16WV	
C187			CC73GCH1H331J	CHIP C	330PF	J	
C188			CK73GB1H562K	CHIP C	5600PF	K	
C189			CE04EW1C100M	ELECTRO	10UF	16WV	
C190			CC73GCH1H331J	CHIP C	330PF	J	
C191,192			CE04NW1C100M	ELECTRO	10UF	16WV	
C193			CK73GB1H103K	CHIP C	0.010UF	K	
C194			CE04NW1C100M	ELECTRO	10UF	16WV	
C195			CE04EW1H010M	ELECTRO	1.0UF	50WV	
C196,197			CE04NW1C100M	ELECTRO	10UF	16WV	
C198			CE04EW1C100M	ELECTRO	10UF	16WV	
C199,200			CE04NW1C220M	ELECTRO	22UF	16WV	
C201,202			CK73GF1E104Z	CHIP C	0.10UF	Z	
C203,204			CE04NW1E4R7M	ELECTRO	4.7UF	25WV	
C205			CE04EW1C100M	ELECTRO	10UF	16WV	
C206,207			CK73GF1E104Z	CHIP C	0.10UF	Z	
C208			CK73GB1E223K	CHIP C	0.022UF	K	
C209,210			CE04NW1C100M	ELECTRO	10UF	16WV	
C212,213			CE04NW1H010M	ELECTRO	1.0UF	50WV	
C214			CK73GB1H472K	CHIP C	4700PF	K	
C215,216			CE04EW1C100M	ELECTRO	10UF	16WV	
C218,219			CK73EF1E474Z	CHIP C	0.47UF	Z	
C221,222			CK73FB1H102K	CHIP C	1000PF	K	
C223			CE04EW1C471M	ELECTRO	470UF	16WV	
C224			CE04EW1C100M	ELECTRO	10UF	16WV	
C225			CE04EW1C470M	ELECTRO	47UF	16WV	
C226			CE04EW1C101M	ELECTRO	100UF	16WV	
C227			CE04EW1C100M	ELECTRO	10UF	16WV	
C228			CE04EW1C101M	ELECTRO	100UF	16WV	
C229			CE04EW1C100M	ELECTRO	10UF	16WV	
C230			CE04EW1C471M	ELECTRO	470UF	16WV	
C231,232			CK73EF1E474Z	CHIP C	0.47UF	Z	
C233			CQ92M1H154K	MYLAR	0.15UF	K	
C235,236			CK73FB1H102K	CHIP C	1000PF	K	
C237			CE04EW1E471M	ELECTRO	470UF	25WV	
C240			CC73FSL1H152J	CHIP C	1500PF	J	
C241			CE04EW1H010M	ELECTRO	1.0UF	50WV	
C300,301			CC73FCH1H101J	CHIP C	100PF	J	
C302			CC73GCH1H101J	CHIP C	100PF	J	

Ref. No.	Address	New parts	Parts No.	Description			Destination
C303,304			CC73FCH1H101J	CHIP C	100PF	J	
C305			CC73GCH1H101J	CHIP C	100PF	J	
C306,307			CC73FCH1H101J	CHIP C	100PF	J	
C308			CC73GCH1H101J	CHIP C	100PF	J	
C309,310			CC73FCH1H101J	CHIP C	100PF	J	
C312,313			CC73FCH1H101J	CHIP C	100PF	J	
C314			CC73GCH1H101J	CHIP C	100PF	J	
C315			CC73FCH1H101J	CHIP C	100PF	J	
C316-320			CK73FB1H102K	CHIP C	1000PF	K	
C321			CC73FSL1H471J	CHIP C	470PF	J	
C326,327			CK73GB1H102K	CHIP C	1000PF	K	
C330-333			CK73FB1H102K	CHIP C	1000PF	K	
C334			CK73GB1E223K	CHIP C	0.022UF	K	
C335			CC73GCH1H331J	CHIP C	330PF	J	
C336-340			CK73GB1E223K	CHIP C	0.022UF	K	
C341			CK73FF1E104Z	CHIP C	0.10UF	Z	
C342			CC73FSL1H152J	CHIP C	1500PF	J	
C343			CK73FB1H562K	CHIP C	5600PF	K	
C344			CK73GB1H472K	CHIP C	4700PF	K	
C345			CK73GB1E223K	CHIP C	0.022UF	K	
C346-348			CC73FCH1H101J	CHIP C	100PF	J	
C349,350			CK73FF1E104Z	CHIP C	0.10UF	Z	
C351			CK73GB1E223K	CHIP C	0.022UF	K	
C355			CE04NW1C100M	ELECTRO	10UF	16WV	
C356			CE04EW1HR47M	ELECTRO	0.47UF	50WV	
C357			CE04EW1C100M	ELECTRO	10UF	16WV	
C358-361			CK73FB1H103K	CHIP C	0.010UF	K	
C363			CK73GB1H103K	CHIP C	0.010UF	K	
C364			C90-2045-05	ELECTRO	2.2UF	25WV	
C365-375			CK73FB1H471K	CHIP C	470PF	K	
C376			CK73GB1E223K	CHIP C	0.022UF	K	
C377-379			CK73FB1H471K	CHIP C	470PF	K	
C381,382			CK73FB1H103K	CHIP C	0.010UF	K	
C383			CK73GB1H102K	CHIP C	1000PF	K	
C384			CK73FB1H102K	CHIP C	1000PF	K	
C385			CK73GB1H103K	CHIP C	0.010UF	K	
C386			CK73FB1H103K	CHIP C	0.010UF	K	
C387			CK73GB1H103K	CHIP C	0.010UF	K	
C388			CK73FB1H471K	CHIP C	470PF	K	
C389,390			CK73GB1H471K	CHIP C	470PF	K	
C391-394			CK73FB1H103K	CHIP C	0.010UF	K	
C395			CK73GB1H103K	CHIP C	0.010UF	K	
C400			CC73FSL1H471J	CHIP C	470PF	J	
C401			CK73FB1H103K	CHIP C	0.010UF	K	
C402			C90-2167-05	ELECTRO	100UF	16WV	
CN1			E40-3239-05	PIN CONNECTOR (4P)			
CN3			E40-3239-05	PIN CONNECTOR (4P)			
CN4			E40-3242-05	PIN CONNECTOR (7P)			
CN5		*	E40-5747-05	PIN CONNECTOR (11P)			
CN6			E40-3243-05	PIN CONNECTOR (8P)			
CN7			E40-5736-05	FLAT CABLE CONNECTOR (26P)			
CN8		*	E40-5740-05	FLAT CABLE CONNECTOR (20P)			
CN9			E40-3240-05	PIN CONNECTOR (5P)			
CN10			E40-3238-05	PIN CONNECTOR (3P)			
CN11		*	E40-5741-05	FLAT CABLE CONNECTOR (8P)			
CN12			E40-3237-05	PIN CONNECTOR (2P)			
CN13			E04-0191-05	RF COAXIAL CABLE SOCKET			
CN14-16			E02-2015-05	SOCKET FOR IC			
CN17			E40-5067-05	PIN CONNECTOR (10P)			

PARTS LSIT

TX-RX UNIT (X57-4620-00)

Ref. No.	Address	New parts	Parts No.	Description	Destination
J1			E11-0455-05	PHONE JACK (3.5D)	
J2			E11-0431-05	PHONE JACK	
J4			E63-0401-05	PHONO JACK	
J5			E06-1352-05	DIN SOCKET	
J6			E11-0455-05	PHONE JACK (3.5D)	
J7		*	E58-0428-05	SUB PLUG (D) 9P	
W1		*	E37-0536-05	LEAD WIRE WITH MINIPIN PLUG	
A1	4G	*	F01-1005-04	HEAT SINK	
A2	4F		F11-1127-04	SHIELDING CASE	
A3 4	4G		G02-0574-04	FLAT SPRING	
A5	4G		G02-0719-04	FLAT SPRING	
CF1,2			L72-0374-05	CERAMIC FILTER (455KHZ)	
CF3			L72-0366-05	CERAMIC FILTER (455KHZ)	
L1			L40-2285-48	SMALL FIXED INDUCTOR (220NH)	
L2			L40-4785-48	SMALL FIXED INDUCTOR	
L3			L40-1011-15	SMALL FIXED INDUCTOR	
L4		*	L34-4397-05	COIL	
L5			L40-1011-15	SMALL FIXED INDUCTOR	
L8		*	L40-4711-15	SMALL FIXED INDUCTOR	
L9			L40-1011-15	SMALL FIXED INDUCTOR	
L10			L40-1092-12	SMALL FIXED INDUCTOR	
L11-17			L40-1011-15	SMALL FIXED INDUCTOR	
L18			L40-1001-15	SMALL FIXED INDUCTOR	
L19,20		*	L39-1245-05	COIL	
L21		*	L40-2711-33	SMALL FIXED INDUCTOR	
L22,23			L40-2201-12	SMALL FIXED INDUCTOR	
L24 25			L40-1092-12	SMALL FIXED INDUCTOR	
L26			L40-1001-15	SMALL FIXED INDUCTOR	
R1			RK73FB2A103J	CHIP R 10K J 1/10W	
R2 3			RK73GB1J103J	CHIP R 10K J 1/16W	
R4-6			RK73GB1J101J	CHIP R 100 J 1/16W	
R7			RK73FB2A103J	CHIP R 10K J 1/10W	
R8			RK73GB1J682J	CHIP R 6.8K J 1/16W	
R9			RK73GB1J222J	CHIP R 2.2K J 1/16W	
R10			RK73GB1J330J	CHIP R 33 J 1/16W	
R11			RK73GB1J183J	CHIP R 18K J 1/16W	
R12			RK73FB2A103J	CHIP R 10K J 1/10W	
R13			RK73GB1J101J	CHIP R 100 J 1/16W	
R16			RK73GB1J680J	CHIP R 68 J 1/16W	
R17 18			RK73FB2A222J	CHIP R 2.2K J 1/10W	
R19			RK73GB1J101J	CHIP R 100 J 1/16W	
R21-24			RK73FB2A103J	CHIP R 10K J 1/10W	
R50			RK73GB1J682J	CHIP R 6.8K J 1/16W	
R51			RK73FB2A104J	CHIP R 100K J 1/10W	
R52			RK73GB1J392J	CHIP R 3.9K J 1/16W	
R53			RK73GB1J221J	CHIP R 220 J 1/16W	
R54			RK73GB1J152J	CHIP R 1.5K J 1/16W	
R55,56			RK73GB1J103J	CHIP R 10K J 1/16W	
R57			RK73GB1J334J	CHIP R 330K J 1/16W	
R58			RK73GB1J470J	CHIP R 47 J 1/16W	
R59			RK73GB1J151J	CHIP R 150 J 1/16W	
R60			RK73GB1J152J	CHIP R 1.5K J 1/16W	
R61			RK73GB1J333J	CHIP R 33K J 1/16W	
R62			RK73GB1J223J	CHIP R 22K J 1/16W	
R63			RK73GB1J102J	CHIP R 1.0K J 1/16W	
R64,65			RK73GB1J470J	CHIP R 47 J 1/16W	
R66			RK73GB1J221J	CHIP R 220 J 1/16W	

Ref. No.	Address	New parts	Parts No.	Description	Destination
R100			RK73FB2A100J	CHIP R 10 J 1/10W	
R101			RK73GB1J472J	CHIP R 4.7K J 1/16W	
R103			RK73GB1J102J	CHIP R 1.0K J 1/16W	
R104			RK73GB1J472J	CHIP R 4.7K J 1/16W	
R105			RK73GB1J102J	CHIP R 1.0K J 1/16W	
R106			RK73GB1J154J	CHIP R 150K J 1/16W	
R109			RK73GB1J102J	CHIP R 1.0K J 1/16W	
R110			RK73GB1J223J	CHIP R 22K J 1/16W	
R111			RK73GB1J222J	CHIP R 2.2K J 1/16W	
R113			RK73GB1J104J	CHIP R 100K J 1/16W	
R114			RK73GB1J472J	CHIP R 4.7K J 1/16W	
R117			RK73GB1J823J	CHIP R 82K J 1/16W	
R118			RK73GB1J222J	CHIP R 2.2K J 1/16W	
R119,120			RK73GB1J223J	CHIP R 22K J 1/16W	
R121,122			RK73GB1J123J	CHIP R 12K J 1/16W	
R123			RK73GB1J223J	CHIP R 22K J 1/16W	
R124			RK73GB1J103J	CHIP R 10K J 1/16W	
R126			RK73GB1J183J	CHIP R 18K J 1/16W	
R127,128			RK73GB1J103J	CHIP R 10K J 1/16W	
R129			RK73GB1J472J	CHIP R 4.7K J 1/16W	
R130			RK73GB1J223J	CHIP R 22K J 1/16W	
R131			RK73GB1J101J	CHIP R 100 J 1/16W	
R132			RK73GB1J472J	CHIP R 4.7K J 1/16W	
R133			RK73GB1J103J	CHIP R 10K J 1/16W	
R134,135			RK73GB1J152J	CHIP R 1.5K J 1/16W	
R136			RK73GB1J331J	CHIP R 330 J 1/16W	
R137			RK73FB2A102J	CHIP R 1.0K J 1/10W	
R138			RK73GB1J152J	CHIP R 1.5K J 1/16W	
R139			RK73GB1J223J	CHIP R 22K J 1/16W	
R140			RK73GB1J470J	CHIP R 47 J 1/16W	
R141			RK73GB1J392J	CHIP R 3.9K J 1/16W	
R142,143			RK73GB1J222J	CHIP R 2.2K J 1/16W	
R144			RK73GB1J101J	CHIP R 100 J 1/16W	
R145			RK73GB1J472J	CHIP R 4.7K J 1/16W	
R146,147			RK73GB1J101J	CHIP R 100 J 1/16W	
R148			RK73GB1J471J	CHIP R 470 J 1/16W	
R149			RK73GB1J101J	CHIP R 100 J 1/16W	
R150			RK73GB1J471J	CHIP R 470 J 1/16W	
R151			RK73GB1J472J	CHIP R 4.7K J 1/16W	
R152			RK73GB1J152J	CHIP R 1.5K J 1/16W	
R153,154			RK73GB1J331J	CHIP R 330 J 1/16W	
R155			RK73GB1J222J	CHIP R 2.2K J 1/16W	
R156			RK73GB1J332J	CHIP R 3.3K J 1/16W	
R157			RK73GB1J222J	CHIP R 2.2K J 1/16W	
R158,159			RK73GB1J472J	CHIP R 4.7K J 1/16W	
R160			RK73GB1J103J	CHIP R 10K J 1/16W	
R161			RK73GB1J222J	CHIP R 2.2K J 1/16W	
R162,163			RK73GB1J331J	CHIP R 330 J 1/16W	
R164			RK73GB1J222J	CHIP R 2.2K J 1/16W	
R165			RK73GB1J331J	CHIP R 330 J 1/16W	
R166			RK73GB1J392J	CHIP R 3.9K J 1/16W	
R167			RK73GB1J472J	CHIP R 4.7K J 1/16W	
R168			RK73GB1J100J	CHIP R 10 J 1/16W	
R169			RK73GB1J471J	CHIP R 470 J 1/16W	
R170			RK73GB1J101J	CHIP R 100 J 1/16W	
R171,172			RK73FB2A100J	CHIP R 10 J 1/10W	
R173			RK73GB1J101J	CHIP R 100 J 1/16W	
R174			RK73GB1J123J	CHIP R 12K J 1/16W	
R175			RK73FB2A123J	CHIP R 12K J 1/10W	

PARTS LIST

TX-RX UNIT (X57-4620-00)

Ref. No.	Address	New parts	Parts No.	Description	Destination
R176			RK73FB2A183J	CHIP R 18K J 1/10W	
R177			RK73GB1J183J	CHIP R 18K J 1/16W	
R178			RK73FB2A153J	CHIP R 15K J 1/10W	
R179			RK73GB1J103J	CHIP R 10K J 1/16W	
R180			RK73GB1J821J	CHIP R 820 J 1/16W	
R181			RK73GB1J222J	CHIP R 2.2K J 1/16W	
R182			RK73GB1J103J	CHIP R 10K J 1/16W	
R183			RK73FB2A153J	CHIP R 15K J 1/10W	
R184			RK73GB1J272J	CHIP R 2.7K J 1/16W	
R185			RK73GB1J153J	CHIP R 15K J 1/16W	
R186			RK73FB2A222J	CHIP R 2.2K J 1/10W	
R187			RK73GB1J223J	CHIP R 22K J 1/16W	
R188			RK73GB1J101J	CHIP R 100 J 1/16W	
R189,190			RK73GB1J153J	CHIP R 15K J 1/16W	
R191,192			RK73GB1J222J	CHIP R 2.2K J 1/16W	
R193,194			RK73GB1J223J	CHIP R 22K J 1/16W	
R196			RK73FB2A472J	CHIP R 4.7K J 1/10W	
R197			RK73GB1J103J	CHIP R 10K J 1/16W	
R198,199			RK73GB1J104J	CHIP R 100K J 1/16W	
R200			RK73FB2A101J	CHIP R 100 J 1/10W	
R201			RK73GB1J221J	CHIP R 220 J 1/16W	
R202,203			RK73GB1J104J	CHIP R 100K J 1/16W	
R204			RK73GB1J222J	CHIP R 2.2K J 1/16W	
R205			RK73GB1J272J	CHIP R 2.7K J 1/16W	
R206			RK73GB1J224J	CHIP R 220K J 1/16W	
R207			RK73GB1J222J	CHIP R 2.2K J 1/16W	
R208			RK73GB1J123J	CHIP R 12K J 1/16W	
R209			RK73GB1J563J	CHIP R 56K J 1/16W	
R215			RK73GB1J681J	CHIP R 680 J 1/16W	
R220			RK73GB1J103J	CHIP R 10K J 1/16W	
R300			RK73FB2A100J	CHIP R 10 J 1/10W	
R301			RK73GB1J101J	CHIP R 100 J 1/16W	
R303-319			RK73GB1J101J	CHIP R 100 J 1/16W	
R320			RK73GB1J102J	CHIP R 1.0K J 1/16W	
R323			RK73GB1J101J	CHIP R 100 J 1/16W	
R325			RK73FB2A473J	CHIP R 47K J 1/10W	
R330			RK73GB1J470J	CHIP R 47 J 1/16W	
R331			RK73GB1J102J	CHIP R 1.0K J 1/16W	
R332			RK73GB1J222J	CHIP R 2.2K J 1/16W	
R334			RK73GB1J331J	CHIP R 330 J 1/16W	
R335			RK73GB1J101J	CHIP R 100 J 1/16W	
R336			RK73GB1J102J	CHIP R 1.0K J 1/16W	
R337,338			RK73GB1J124J	CHIP R 120K J 1/16W	
R339,340			RK73GB1J334J	CHIP R 330K J 1/16W	
R343			RK73GB1J471J	CHIP R 470 J 1/16W	
R344			RK73FB2A2R2J	CHIP R 2.2 J 1/10W	
R345-347			RK73GB1J101J	CHIP R 100 J 1/16W	
R348,349			RK73GB1J473J	CHIP R 47K J 1/16W	
R350,351			RK73FB2A473J	CHIP R 47K J 1/10W	
R352-354			RK73GB1J473J	CHIP R 47K J 1/16W	
R355			RK73GB1J103J	CHIP R 10K J 1/16W	
R356			RK73GB1J473J	CHIP R 47K J 1/16W	
R357			RK73GB1J103J	CHIP R 10K J 1/16W	
R358			RK73GB1J473J	CHIP R 47K J 1/16W	
R359			RK73GB1J101J	CHIP R 100 J 1/16W	
R364,365			RK73GB1J222J	CHIP R 2.2K J 1/16W	
R366			R92-1252-05	CHIP R 0 OHM	
R367,368			RK73FB2A473J	CHIP R 47K J 1/10W	
R369			RK73GB1J473J	CHIP R 47K J 1/16W	

Ref. No.	Address	New parts	Parts No.	Description	Destination
R371-374			RK73GB1J473J	CHIP R 47K J 1/16W	
R376			RK73GB1J473J	CHIP R 47K J 1/16W	
R377,378			RK73FB2A473J	CHIP R 47K J 1/10W	
R379			RK73GB1J473J	CHIP R 47K J 1/16W	
R380-418			RK73FB2A103J	CHIP R 10K J 1/10W	
R419-428			RK73GB1J101J	CHIP R 100 J 1/16W	
R429			RK73FB2A103J	CHIP R 10K J 1/10W	
R430			RK73GB1J472J	CHIP R 4.7K J 1/16W	
R431,432			RK73GB1J103J	CHIP R 10K J 1/16W	
R433			RK73GB1J102J	CHIP R 1.0K J 1/16W	
R434			RK73GB1J470J	CHIP R 47 J 1/16W	
R435,436			RK73GB1J472J	CHIP R 4.7K J 1/16W	
VR1,2			R12-6732-05	TRIMMING POT. 470	
VR3			R12-6742-05	TRIMMING POT. 22K	
D1-4			RLS73	DIODE	
D5			1SV166	DIODE	
D7			DAP202K	DIODE	
D8			RLS73	DIODE	
IC1,2		*	DSP56002FC40	IC	
IC3		*	MBCG24173-6173	IC (GATE ARRAY)	
IC4		*	27C256PCJJTC-K	IC	
IC5		*	27C256PCJJUC-K	IC	
IC6		*	27C256PCJJVC-K	IC	
IC7		*	MCM56824AFN20	IC	
IC7		*	MCM56824AFN25	IC	
IC9		*	7032LC44JLQA	IC	
IC15			MB86001PF	IC	
IC16			AK4318-VS	IC	
IC17			NJM2100M	IC (OP AMPLIFIER)	
IC18			MC74HC4053F	IC (ANALOG SW)	
IC19-21			NJM4560M	IC (OP AMP X2)	
IC22		*	AD822AR	IC	
IC23			MC74HC4052F	IC (HPF)	
IC24			NJM2100M	IC (OP AMPLIFIER)	
IC25			AK5340-VS	IC (AD CONVERTER (18 Bit))	
IC26			M62363FP	IC (8bit D/A CONVERTER)	
IC27			AK4318-VS	IC	
IC28			NJM2100M	IC (OP AMPLIFIER)	
IC29			M51131L	IC (ELECTRO VOLUME)	
IC30			NJM2100M	IC (OP AMPLIFIER)	
IC31			M51131L	IC (ELECTRO VOLUME)	
IC33			LA4422	IC (AF POWER AMP/ 5.8W)	
IC34			PCM69AU	IC (18bit D/A CONVERTOR)	
IC35		*	AD822AR	IC	
IC36			NJM4560M	IC (OP AMP X2)	
IC37,38			UPC7805H	IC (VOLTAGE REGULATOR/ +5V)	
IC39			NJM78L05UA	IC (VOLTAGE REGULATOR/ +5V)	
IC40			NJM78L08UA	IC (VOLTAGE REGULATOR/ +8V)	
IC41,42			NJM3404AM	IC (OP AMP X2)	
IC43			NJM5532M	IC (OP AMP)	
IC44			TC7S04F	IC (2CH NAND GATE)	
Q1			DTC124EK	DIGITAL TRANSISTOR	
Q2,3			2SC2714(Y)	TRANSISTOR	
Q4			DTC124EK	DIGITAL TRANSISTOR	
Q5-7			2SC3324(G)	TRANSISTOR	
Q8			2SK210(GR)	FET	
Q9,10			2SC2714(Y)	TRANSISTOR	
Q12			2SC2712(Y)	TRANSISTOR	
Q13-17			2SC2412K(S)	TRANSISTOR	

PARTS LSIT

TX-RX UNIT (X57-4620-00)
VCO2 (X58-3390-03)

Ref. No.	Address	New parts	Parts No.	Description	Destination
Q22			DTC124EK	DIGITAL TRANSISTOR	
Q23			2SC2712(Y)	TRANSISTOR	
Q25			DTA143EK	DIGITAL TRANSISTOR	
Q26			DTC124XK	DIGITAL TRANSISTOR	
Q27			DTC143EK	DIGITAL TRANSISTOR	
VCO2 (X58-3390-03)					
-			B42-2437-04	S/NO LABEL	
C1			CK73FB1H102K	CHIP C 1000PF K	
C2			CC73FSL1H101J	CHIP C 100PF J	
C3			CC73FCH1H070D	CHIP C 7.0PF D	
C4			CC73FCH1H070D	CHIP C 7.0PF D	
C4			CC73FCH1H220J	CHIP C 22PF J	
C6			CC73FCH1H180J	CHIP C 18PF J	
C7			CC73FCH1H120J	CHIP C 12PF J	
C8,9			CK73FB1H102K	CHIP C 1000PF K	
C10			CC73FCH1H010C	CHIP C 1.0PF C	
C11			CK73FB1H102K	CHIP C 1000PF K	
TC1			C05-0331-15	TRIMMER CAPACITOR 10PF	
TP1-3			E23-0464-05	TERMINAL	
-			F11-1085-04	SHIELDING CASE	
-			F11-1086-14	SHIELDING COVER	
			G13-0904-04	CUSHION (COVER)	
L1			L33-0690-05	CHOKE COIL (3.3UH)	
L2			L34-2353-05	COIL	
T	2F		N30-2604-41	PAN HEAD MACHIN SCREW	
R1			RK73FB2A682J	CHIP R 6.8K J 1/10W	
R2			RK73FB2A271J	CHIP R 270 J 1/10W	
R3			RK73FB2A330J	CHIP R 33 J 1/10W	
R4,5			RK73FB2A472J	CHIP R 4.7K J 1/10W	
R6			RK73FB2A471J	CHIP R 470 J 1/10W	
R7			RK73FB2A560J	CHIP R 56 J 1/10W	
D1			1SV164	DIODE	
Q1			2SK508NV(K52)	FET	
Q2			2SC2714(Y)	TRANSISTOR	

EXPLODED VIEW

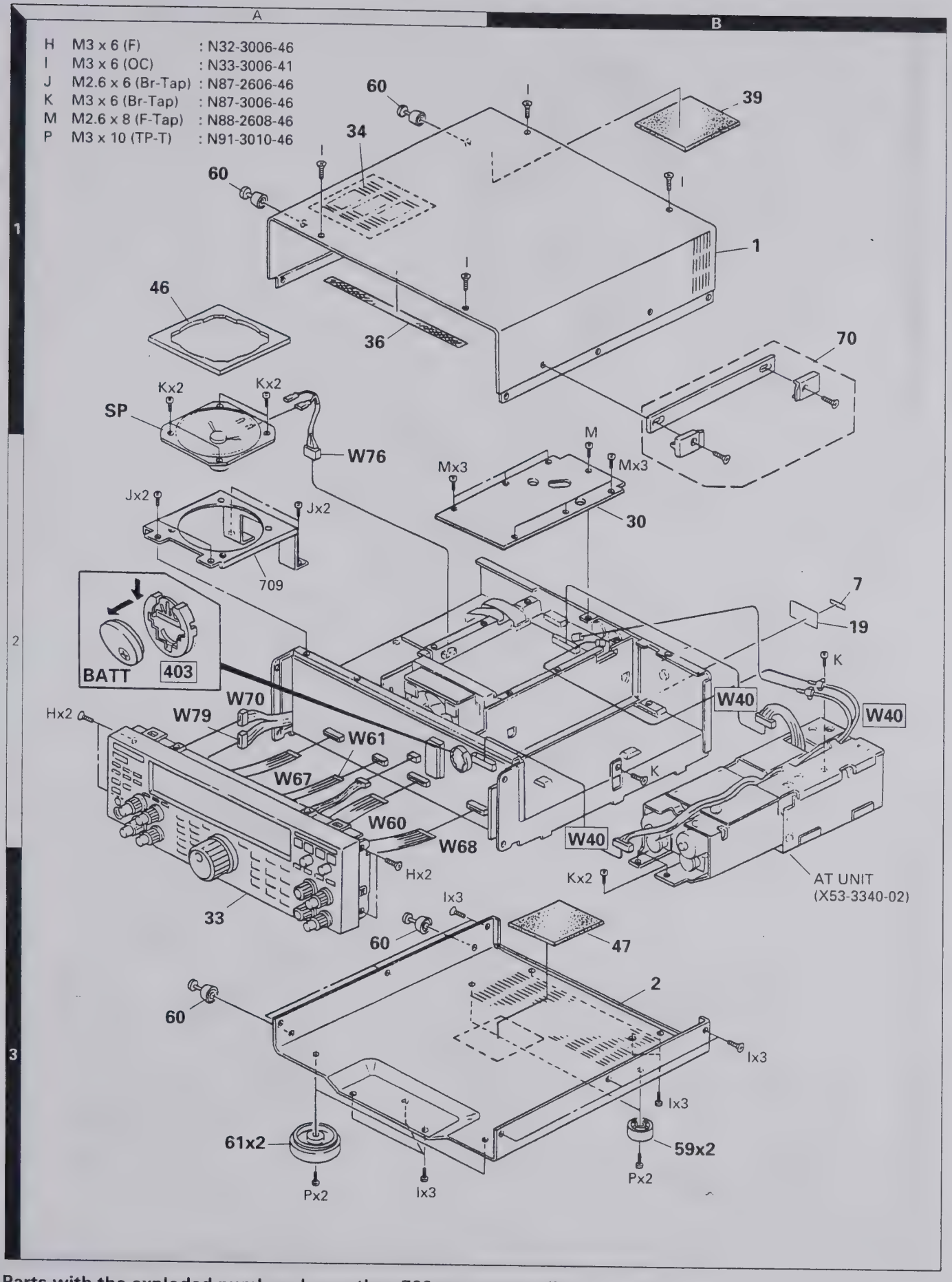

Parts with the exploded numbers larger than 700 are not supplied.

EXPLODED VIEW

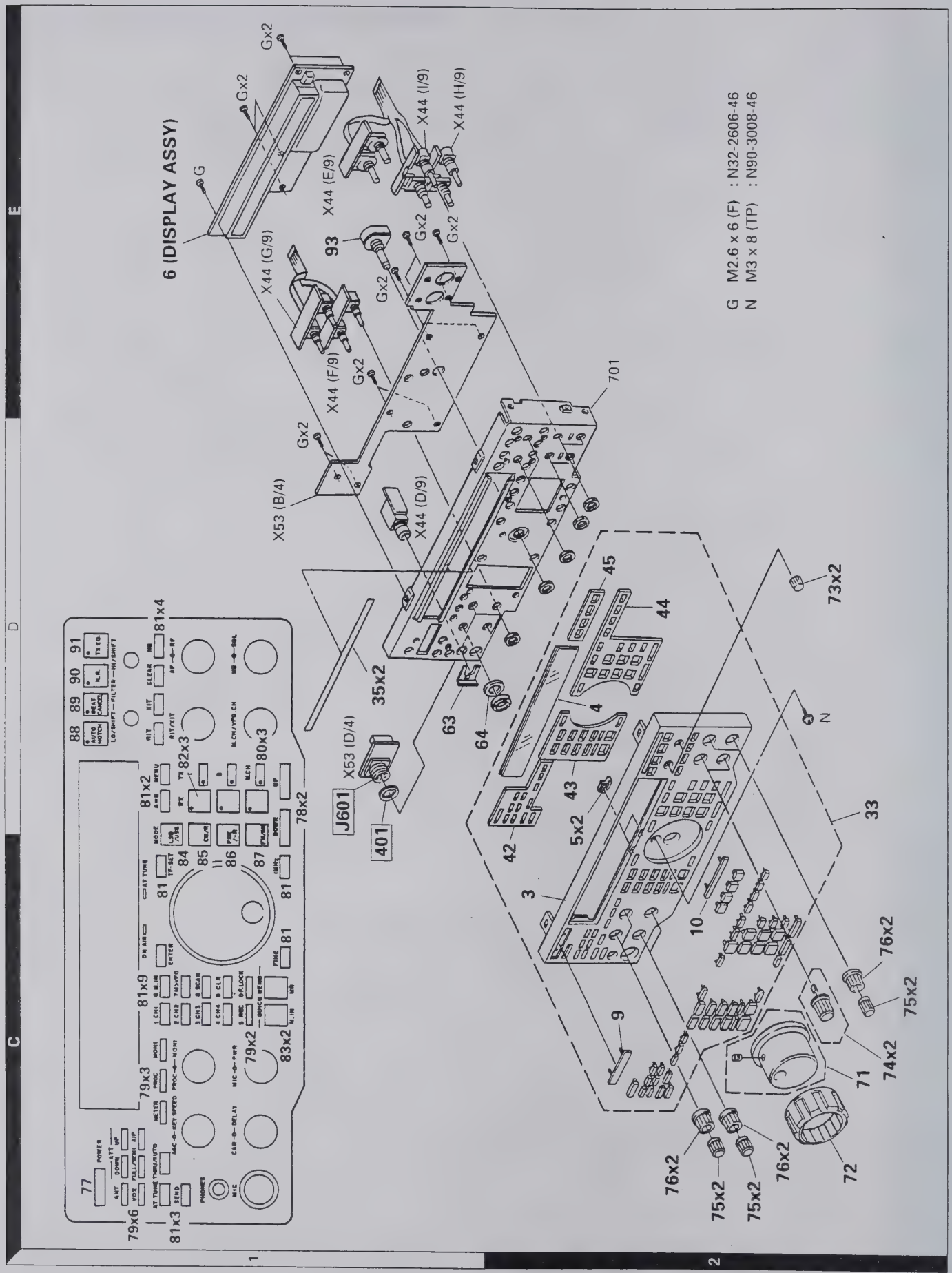

Parts with the exploded numbers larger than 700 are not supplied.

EXPLODED VIEW

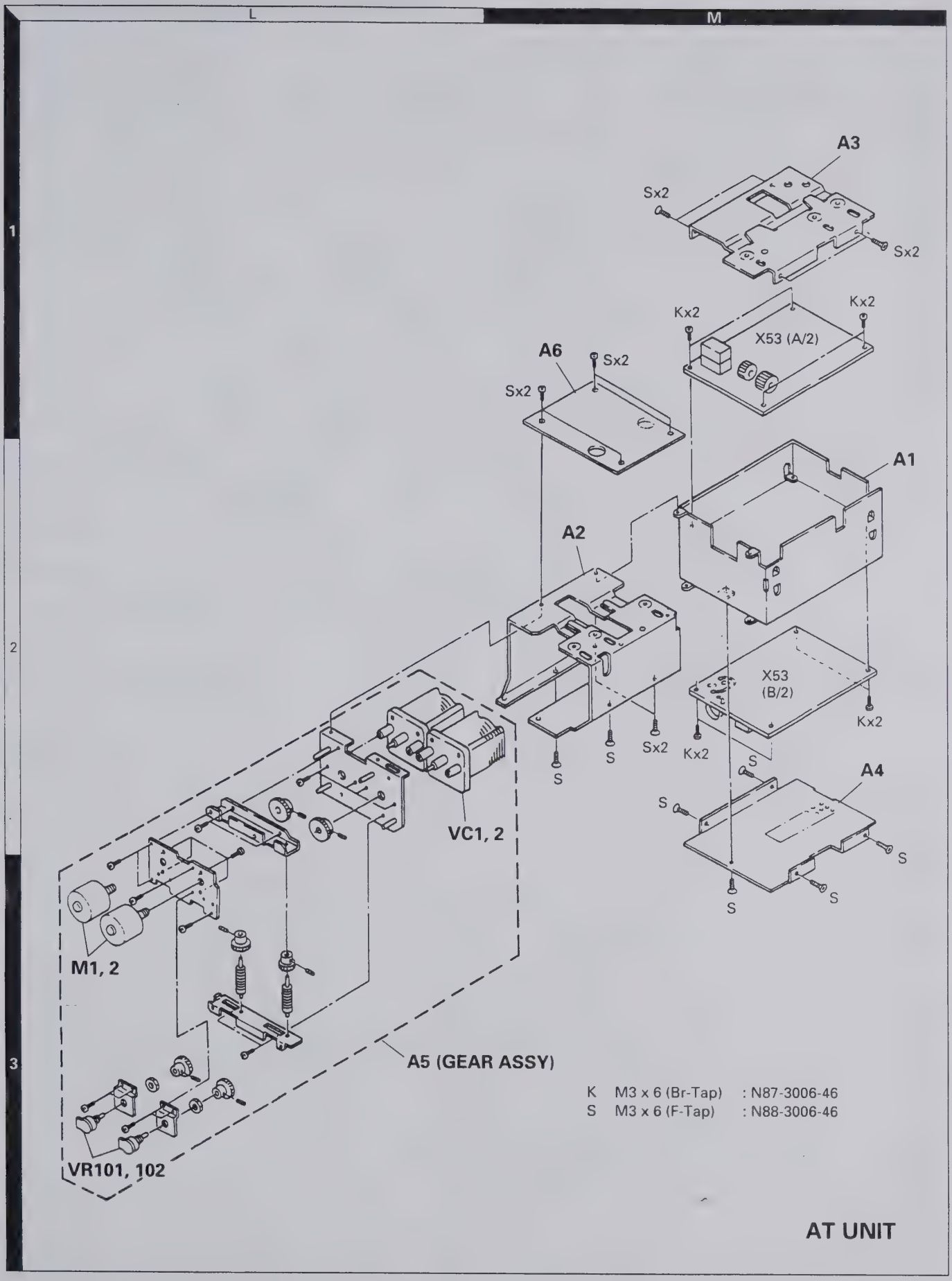

PACKING

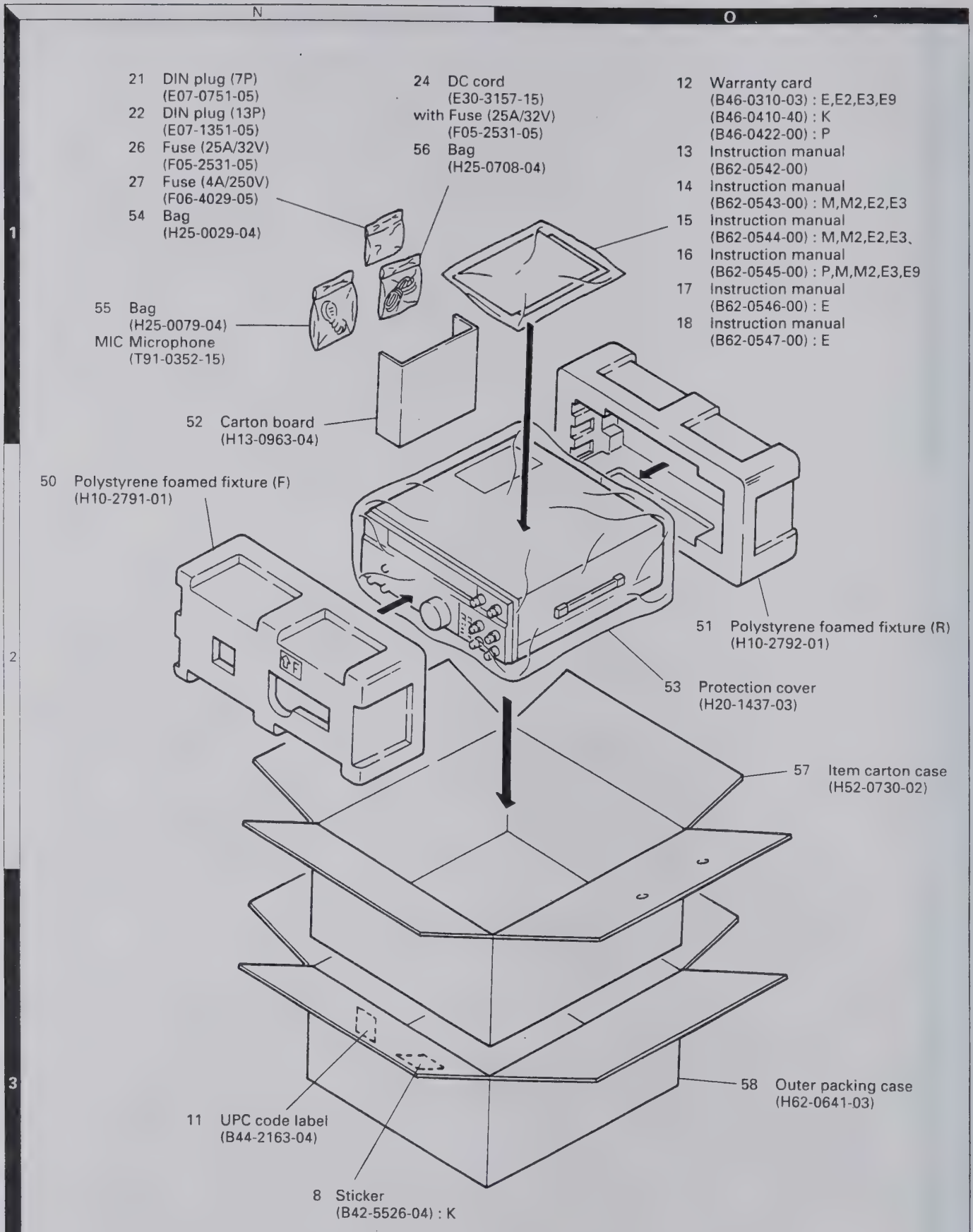
N
O
1
2
3
21 DIN plug (7P) (E07-0751-05)
22 DIN plug (13P) (E07-1351-05)
26 Fuse (25A/32V) (F05-2531-05)
27 Fuse (4A/250V) (F06-4029-05)
54 Bag (H25-0029-04)
24 DC cord (E30-3157-15) with Fuse (25A/32V) (F05-2531-05)
56 Bag (H25-0708-04)
12 Warranty card (B46-0310-03) : E,E2,E3,E9 (B46-0410-40) : K (B46-0422-00) : P
13 Instruction manual (B62-0542-00)
14 Instruction manual (B62-0543-00) : M,M2,E2,E3
15 Instruction manual (B62-0544-00) : M,M2,E2,E3
16 Instruction manual (B62-0545-00) : P,M,M2,E3,E9
17 Instruction manual (B62-0546-00) : E
18 Instruction manual (B62-0547-00) : E
55 Bag (H25-0079-04)
MIC Microphone (T91-0352-15)
52 Carton board (H13-0963-04)
50 Polystyrene foamed fixture (F) (H10-2791-01)
51 Polystyrene foamed fixture (R) (H10-2792-01)
53 Protection cover (H20-1437-03)
57 Item carton case (H52-0730-02)
58 Outer packing case (H62-0641-03)
11 UPC code label (B44-2163-04)
8 Sticker (B42-5526-04) : K

ADJUSTMENT

Required Test Equipment

1. DC Voltmeter (DC V.M)
1) Input resistance : More than 1MΩ
2) Voltage range : 1.5 to 1000V AC/DC
Note : A high-recision multimeter may be used. However, accurate readings can not be obtained for high-impedance circuits.

2. DC Ammeter
1) Current range : 100mA, 1.5A, 15A, high-precision ammeter may be used.

3. RF VTVM (RF V.M)
1) Input impedance : 1MΩ and less than 3pF, min.
2) Voltage range : 10mV to 300V
3) Frequency range : 10kHz to 500MHz

4. AF Voltmeter (AF V.M)
1) Frequency range : 50Hz to 10kHz
2) Input resistance : 1MΩ or greater
3) Voltage range : 10mV to 30V

5. AF Generator (AG)
1) Frequency range : 200Hz to 5kHz
2) Output : 1mV or less to 1V, low distortion

6. AF Dummy Load (DM. SP)
1) Impedance : 8Ω
2) Dissipation : 3W or greater

7. Oscilloscope
Requires high sensitivity, and external synchronization capability (150MHz or greater).

8. Sweep Generator (Sweep G.)
1) Center frequency : 50kHz to 90MHz
2) Frequency deviation : Maximum ±35kHz
3) Output voltage : 100mV or greater

9. Standard Signal Generator (SSG)
1) Frequency range : 50kHz to 50MHz
2) Output : –133dBm/0.05μV to 7dBm/500mV
3) Output impedance : 50Ω
4) AM and FM modulation can be possible
Note : Generator must be frequency stable.

10. Frequency Counter (f. counter)
1) Minimum input voltage : 50mV
2) Frequency range : 150MHz or greater

11. Noise Generator (Noise G.)
Must generate ignition noise containing harmonics beyond 30MHz.

12. RF Dummy Load
1) Impedance : 150Ω and 50Ω
2) Dissipation : 150W or greater

13. Linear Detector
1) Frequency range : 30MHz

14. Power Meter
1) Impedance : 50Ω
2) Dissipation : 300W continuous or greater
3) Frequency limits : 60MHz or greater

15. Spectrum Analyzer
1) Frequency range : 100kHz to 110MHz or greater
2) Bandwidth : 1kHz to 3MHz

16. Detector
1) For adjustment of BPF

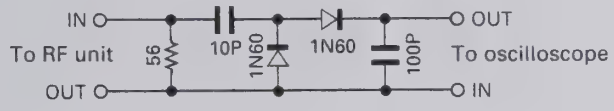

2) For adjustment of PLL/VCO BPF

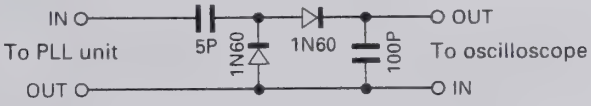

17. Directional Coupler

18. Monitor Receiver
R-1000 class

19. Microphone
MC-43S or MC-60S8

20. Tracking Generator

21. Distortion Meter

22. Double Signal Pad (50Ω)

ADJUSTMENT

Preparation

Unless otherwise specified, knobs and switches should be set as follows.

POWER	ON	PROCESSOR	Center
ATT	0	MIC	Center
AGC	Center	PWR	MAX
NB LEVEL	Center	CAR	Center
SQL	0		
AF	0		
RF	MAX		

Front Panel

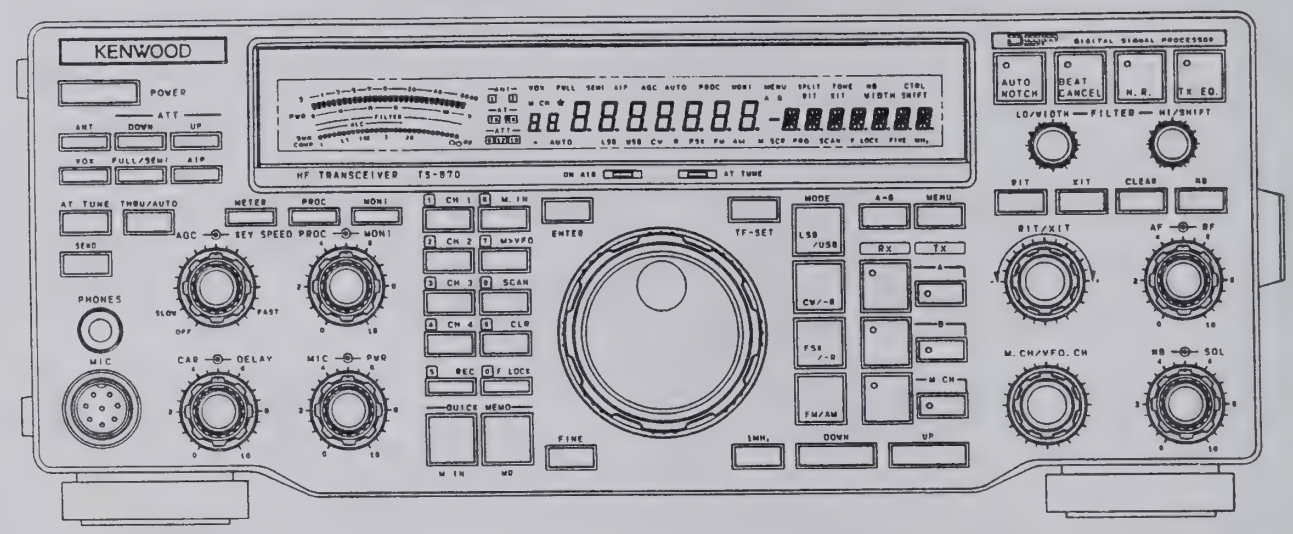

Rear Panel

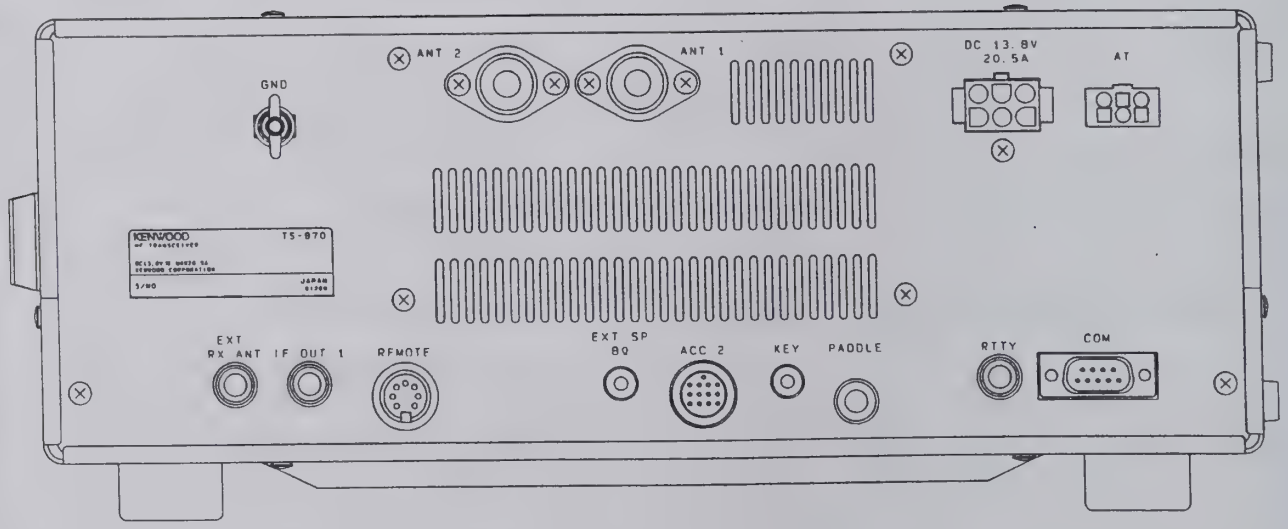

ADJUSTMENT

Service Jig

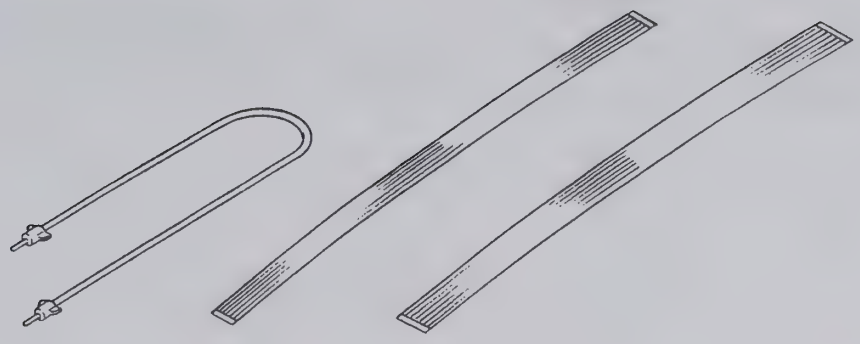

A. Lead wire with minipin plug
(E37-0064-05)
About 27cm

B . Flat cable (8P)
(E37-0581-05)
About 25cm

C. Flat cable (12P)
(E37-0580-05)
About 25cm

How to Use

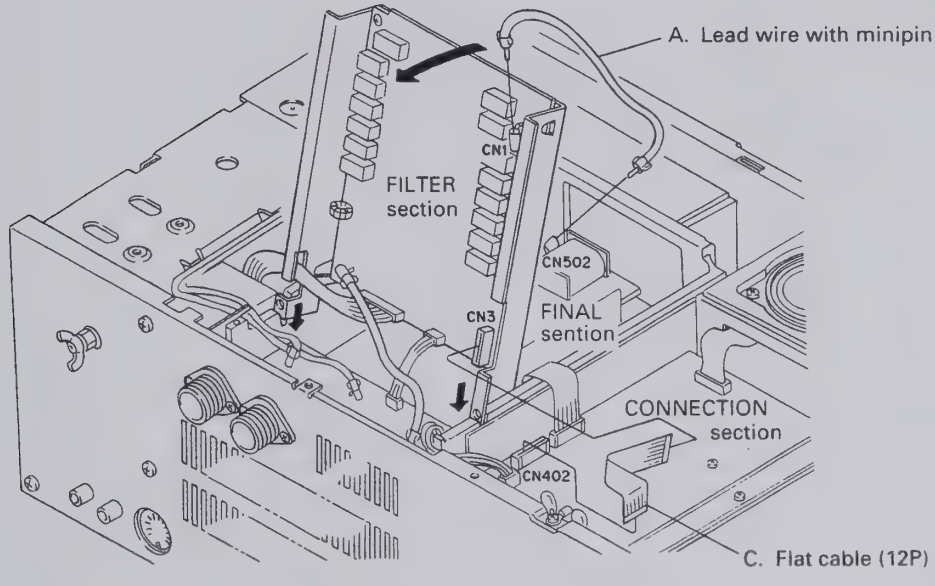

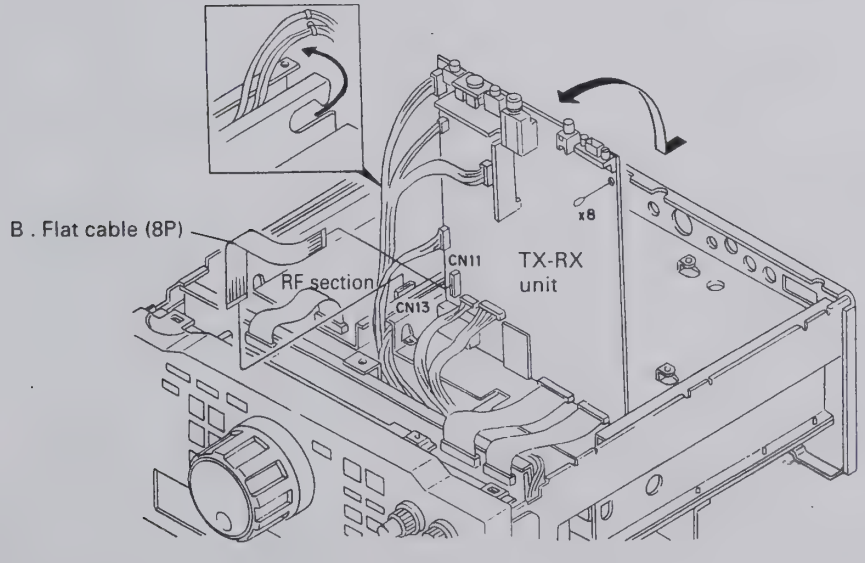

ADJUSTMENT

Service Adjustment Mode

■ Outline

- The TS-870S is adjusted by the normal method and by another method using the service adjustment mode.
- In the adjustment mode, there are 28 menu numbers A0 to BB. All adjustment data items are saved in the EEPROM.
- When the service adjustment mode is entered, data is read from the EEPROM and placed in the CPU RAM so that settings can be modified.
- The EEPROM is updated only when data is written in Menu No. BA.

Note : Transmission is possible in reception-related adjustment modes.

■ Operation procedure

1. Adjustment mode start
   Hold down the [N.R.] key and [LSB/USB] key, and turn the [POWER] switch ON to enter the adjustment mode. The menu number will appear in M. CH on the display.
2. Adjustment mode menu number selection
   When the [M. CH/VFO. CH] control is turned, the menu number changes.
3. Adjustment mode data writing
   Press the [UP]/[DOWN] key or the microphone [UP]/[DOWN] key in MENU No. BA.
4. Adjustment mode cancel
   When the [CLR] key is pressed, the normal memory-channel display returns.

Note : If the power is switched OFF in the adjustment mode, it is canceled.

Service Adjustment Mode Menu

Menu No.	Adjustment function	Description
A0	System	Checksum display (Program version confirmation)
A1	ALC	ALC reference voltage adjustment
A2	S-meter (SSB)	Start level setting
A3		S9 level setting
A4		Full-scale level setting
A5	Filter	8.83MHz IF filter center frequency correction
A6		455kHz IF filter center frequency correction
A7	Power adjustment	100W adjustment (With power meter curve)
A8		50W adjustment (With power meter curve)
A9		25W adjustment (With power meter curve)
AA		10W adjustment (With power meter curve)
AB	TX gain	1.9MHz band
AC		3.5MHz band
AD		7MHz band
AE		10MHz band
AF		14MHz band
B0		18MHz band
B1		21MHz band
B2		24.5MHz band
B3		29MHz band
B4	ALC meter	Stare level setting
B5		Maximum zone level setting
B6		Full-scale level setting
B7	SWR protection	Protection operation setting
B8	SWR meter	VSWR=3 level setting
B9	FM	FM deviation setting
BA	System	Writing into EEPROM
BB	Display	All LCD segments light (Not light ON AIR lamp)

ADJUSTMENT

Display Check

Item	Condition	Measurement			Adjustment			Specifications/Remarks
		Test-equipment	Unit	Terminal	Unit	Parts	Method	
1. All reset	1) DC IN : DC 13.8V Pushing [A=B] key down, [POWER] : ON.				Front panel	Display	After displaying HELLO, the display is reset as follows: DISP f. : 14.000.00 MODE : USB METER : ALC ANT : 1 AGC	Display should be normal Should be at the reset frequency.
2. All LCD segments lignt	1) Menu No. : BB						Check	All LCD segments light

PLL Section

Item	Condition	Measurement			Adjustment			Specifications/Remarks
		Test-equipment	Unit	Terminal	Unit	Parts	Method	
1. 20MHz frequency adj.	1) [POWER] : ON MODE : FM Receive	f. counter	PLL	CN510 (TP)	PLL	TC800	Frequency adjust.	20.000MHz ± 20Hz
2. 20MHz peak adj.	1) Display f. : 14.000MHz MODE : USB Receive	RF V.M		CN503		L528	MAX.	
3. 60MHz BPF adj.	1) MODE : FM Receive			IC506 2 pin		L529 L530	Repeat for MAX.	
4. 55MHz BPF adj. and frequency check	1) Display f. : 14.000MHz MODE : FM Receive			IC508 11 pin		L518 L519 L520	Repeat for MAX	
	2) Display f. : 14.000MHz	f. counter					Frequency check	55.299~55.301MHz
5. Lock voltage adj. & check VCO1	1) Display f. : 30kHz	DC V.M		TP501	PLL	TC506	1.8V	1.8 ± 0.03V
	2) Display f. : 7.489MHz						Voltage check	4.5~7.0V
6. Lock voltage adj. & check VCO2	1) Display f. : 7.500MHz				PLL	TC507	1.8V	1.8 ± 0.03V
	2) Display f. : 14.489MHz						Voltage check	4.5~7.0V
7. Lock voltage adj. & check VCO3	1) Display f. : 14.490MHz				PLL	TC508	1.8V	1.8 ± 0.03V
	2) Display f. : 21.489MHz						Voltage check	4.5~7.0V
8. Lock voltage adj. & check VCO4	1) Display f. : 21.490MHz				PLL	TC509	1.8V	1.8 ± 0.03V
	2) Display f. : 30.000MHz						Voltage check	4.5~7.0V
9. Lock voltage adj. LO2A (VCO2) X58-3390-03	1) Display f. : 30.000MHz			TP502	VCO2 X58-3390	TC1	5.0V	5.0 ± 0.03V

ADJUSTMENT

Item	Condition	Measurement			Adjustment			Specifications/Remarks
		Test-equipment	Unit	Terminal	Unit	Parts	Method	
10. Output level check LO1 (CN504)	1) Display f. : 14.000MHz MODE : USB Receive Meaturement condition : 50Ω terminated			CN504			Output level check	–5~+2dBm
LO2A (CN505)				CN505				–1~+6dBm (64.220MHz)
LO3 (CN502)				CN502				–6~+0dBm (8.375MHz)
20MHz (CN503)				CN503				–10~+0dBm (20.0000MHz)
LO4 (CN501)		Oscilloscope		CN501				–10~+0dBm (10.0kHz)
11. 20MHz frequency (Final check)	1) MODE : USB Receive	f. counter		CN510 (TP)	PLL	TC800	Check	20.000MHz ± 20Hz

Receiver Section

Item	Condition	Measurement			Adjustment			Specifications/Remarks
		Test-equipment	Unit	Terminal	Unit	Parts	Method	
1. DSP PLL lock voltage adj.	1) Display f. : 14.000MHz MODE : USB	DC V.M	TX-RX	TP1	TX-RX	L4	3.50V	±0.1V
2. AGC voltage adj.	1) Display f. : 14.000MHz MODE : CW [RF] GAIN : MAX [AGC] : OFF			TP2		VR2	3.00V	±0.1V
3. MCF adj.	1) Display f. : 14.000MHz MODE : USB [AGC] : OFF Spectrum analyzer setting Center f. : 73.050MHz Frequency span : 50kHz ATT : –10dBm VBW, RBW : 1kHz V.REF : 2dB/DIV	Spectrum analyzer Tracking generator	RF	CN16 CN17	RF	L65 L67 L70 L72	Adjust so that gain is max. and band shown at right becomes flat.	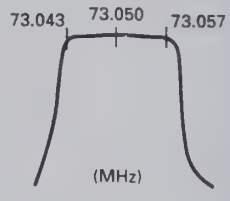
4. BPF adj.	1) Display f. : 7.000MHz MODE : USB [AGC] : OFF [AIP] : OFF Spectrum analyzer setting Center f. : 7.100MHz Frequency span : 2MHz	Spectrum analyser Tracking generator	Rear panel RF	ANT CN15	RF	L28 L29 L30 L31	Waveform is as shown in the figure at the right.	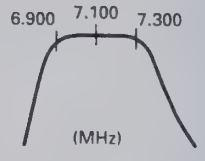
	2) Display f. : 14.000MHz Spectrum analyzer setting Center f. : 14.000MHz Frequency span : 5MHz					L38 L39 L40		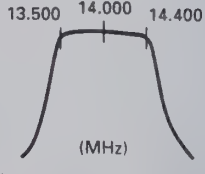
	3) Display f. : 21.000MHz Spectrum analyzer setting Center f. : 21.200MHz Frequency span : 10MHz					L44 L45 L46		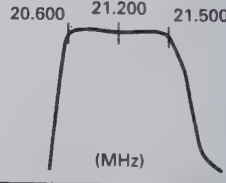

ADJUSTMENT

Item	Condition	Measurement			Adjustment			Specifications/Remarks
		Test-equipment	Unit	Terminal	Unit	Parts	Method	
(28MHz BPF adj.)	1) Display f. : 29.800MHz MODE : USB [AGC] : FAST SSG frequency : 22.101MHz SSG output : –113dBm	SSG AF V.M Oscilloscope DM. SP	Rear panel	ANT EXT. SP	RF	L50 L52	Adjust so that the gain is MAX.	MAX.
5. RX IF AMP adj.	1) Display f. : 14.100MHz MODE : USB [AGC] : OFF [AIP] : OFF AF output : 0.63V/8Ω SSG frequency : 14.101MHz SSG output : –119dBm	SSG AF V.M Oscilloscope DM. SP	Rear panel	ANT EXT. SP	RF Connec-tion	L75 L77 L451 L452 L458	Repeat 2~3 times for MAX AF output reading.	
• Item 6 to 10 below are adjusted in the adjustment mode. To terminate the adjustment menu in the middle, save your settings with Menu No. BA.								
6. Checksum check	1) Menu No. : A0				Front panel	Display	Check	Display : E7b9
7. ALC voltage adj.	1) Menu No. : A1	DC V.M	RF	TP2	Front panel	[RIT/XIT] knob	2.70V	±0.02V
8. S-meter adj.	1) Menu No. : A2 SSG frequency : 14.101MHz SSG output : –110dBm	SSG AF V.M Oscilloscope DM. SP	Rear panel	ANT EXT. SP	TX-RX	VR1	Display : 05	±02
S1	2) Menu No. : A2 SSG output : –107dBm				Front panel	[UP] key	[UP] key : Push once time	Reference display : 12±06
S9	3) Menu No. : A3 SSG output : –81dBm							Reference display : 45±10
Full-scale	4) Menu No. : A4 SSG output : –23dBm							Reference display : 80±20
9. 8.83MHz IF filter adj.	1) Menu No. : A5 SSG1 f. : 1.79980MHz SSG1 output : –60dBm SSG2 f. : 1.80260MHz SSG2 output : –60dBm	SSG1 SSG2 Double signal pad Oscilloscope (10:1 probe)	Rear panel Connec-tion	ANT TP401	Front panel	[RIT/XIT] knob	The waveforms must cross.	OK 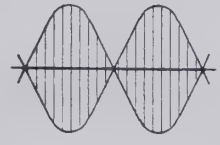
10. 455kHz IF filter adj.	1) Menu No. : A6			TP402				NG 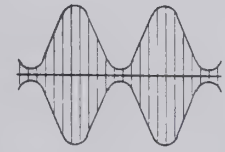

• Writing data : After items 6 to 10 have been adjusted:
1) Menu No. : BA
2) [UP] key : Push once time Display "rEAdy" → "good" (If "nG" is displayed, enter data again.)
3) [CLR] key : Push once time (Adjustment mode terminated)

ADJUSTMENT

Item	Condition	Measurement			Adjustment			Specifications/Remarks
		Test-equipment	Unit	Terminal	Unit	Parts	Method	
11. ATT check	1) Display f. : 14.100MHz SSG frequency : 14.101MHz SSG output : –107dBm [AGC] : OFF [AIP] : OFF AF output : 1V/8Ω	SSG AF V.M Oscilloscope DM. SP	Rear panel	ANT EXT. SP	Front panel	ATT SW (UP/DOWN)	AF output should be lowered 6dB at time.	AF output ± 3dB
	a. ATT : 0dB						1.0V	ATT display : None
	b. ATT [UP] key : 6dB						0.5V	ATT display : 6
	c. ATT [UP] key : 12dB						0.25V	ATT display : 12
	d. ATT [UP] key : 18dB						0.125V	ATT display : 18
	e. ATT [DOWN] key : 12dB						0.25V	ATT display : 12
	f. ATT [DOWN] key : 6dB						0.5V	ATT display : 6
	g. ATT [DOWN] key : 0dB						1.0V	ATT display : None
12. S/N check	1) Display f. : Indicated below AF VR : 0.63V/8Ω SSG f. : Indicated below However, USB : +1kHz LSB : –1kHz	SSG AF V.M Oscilloscope Distortion meter DM. SP	Rear panel	ANT EXT. SP				Note : If the frequency is 7.5MHz or less, AIP turns ON automatically. Turn AIP OFF with the AIP switch before starting measurement.
	Frequency / MODE / SSG output / SSG MOD / DEV							
	100kHz AM –87dBm 1kHz 60%						S/N measurement	10dB or more.
	1.500MHz AM –77dBm 1kHz 60%							
	1.8MHz LSB –119dBm OFF OFF						MAX sensitivity measurement	0.7V/8Ω or more.
	3.5MHz LSB –119dBm OFF OFF							
	5.5MHz LSB –119dBm OFF OFF							
	7.1MHz LSB –119dBm OFF OFF							
	10.1MHz USB –119dBm OFF OFF							
	12.5MHz USB –119dBm OFF OFF							
	14.1MHz USB –119dBm OFF OFF ←						[AIP] : ON	Sensitivity down 5~15dB.
	18.1MHz USB –119dBm OFF OFF							
	21.1MHz USB –119dBm OFF OFF							
	24.8MHz USB –123dBm OFF OFF							
	29.8MHz USB –123dBm OFF OFF							
	29.8MHz FM –119dBm 1kHz 3kHz ←						SINAD sentitivity measurement	12dB SINAD or more.
13. SSB squelch check	1) Display f. : 14.100MHz MODE : USB [AGC] : OFF SSG frequency : 14.101MHz SSG output : OFF	SSG AF V.M Oscilloscope DM. SP	Rear panel	ANT EXT. SP	Front panel	[SQL] VR	Set to the point noise disappeared.	Knob position 10 : 00~14 : 00
	2) SSG output : –101dBm						Check	Squelch should open.
	3) [SQL] VR : Fully clockwise							Squelch should close.
	4) SSG output : –83dBm							Squelch should open.
14. FM squelch check	1) Display f. : 29.8MHz MODE : FM SSG output : OFF				Front panel	[SQL] VR	Set o the point noise disappeared.	Knob position 8 : 00~12 : 00
	2) SSG output : –119dBm SSG MOD : 1kHz SSG DEV : 3kHz						Check	Squelch should open.
	3) [SQL] VR : Fully clockwise							Squelch should close.
	4) SSG output : –100dBm							Squelch should open.

ADJUSTMENT

Item	Condition	Measurement			Adjustment			Specifications/Remarks
		Test-equipment	Unit	Terminal	Unit	Parts	Method	
15. NB adj.	1) Display f. : 14.100MHz MODE : USB SSG frequency : 14.101MHz SSG output : –90dBm	SSG AF V.M Oscilloscope DM. SP DC V.M	Rear panel RF	ANT EXT. SP TP1	RF	L81 L82	Voltage minimum	
	2) [NB] key : ON [NB] VR : Center	Noise G.	Rear panel	ANT			Adjust output of noise generator to small input (S1) and large input (S9) and check each.	Noise should disappear.
16. S-meter check	1) Display f. : 14.175MHz MODE : USB [AGC] : FAST [RF] GAIN : MAX SSG frequency : 14.176MHz SSG output : –107dBm	SSG AF V.M Oscilloscope DM. SP	Rear panel	ANT EXT. SP	Front panel	Display	S-meter level : S1	–111~–101dBm
	2) SSG output : –83dBm						S-meter level : S9	–89~–77dBm
	3) [NB] key : ON						S-meter level check	Same as when [NB] key off.
17. Auto notch check	1) Display f. : 14.175MHz MODE : USB SSG frequency : 14.1765MHz SSG output : –73dBm [AUTO NOTCH] key : Push (ON)	SSG	Rear panel	ANT	Front panel	Display	S-meter level check	S-meter off.
18. Voice check (equipped on VS-2)	1) [AF] VR : Arbitrary [MENU] key : Push (ON) [M.CH/VFO.CH] knob : Menu No. 48 [UP] key : Step 73 [MENU] key : Push (OFF) [FINE] key : Push (ON)						Check	The displayed frequency can be heard vocally.

Transmitter Section

Item	Condition	Measurement			Adjustment			Specifications/Remarks
		Test-equipment	Unit	Terminal	Unit	Parts	Method	
1. TX MCF adj.	1) Display f. : 14.200MHz MODE : USB Transmit Spectrum analyzer setting TG output : –10dBm Center f. : 8.83MHz Span : 10kHz V.REF : 2dB/DIV	Tracking generator Spectrum analyzer	RF	CN10 TP3	RF	L100	MAX.	
2. TX IF AMP adj.	1) Display f. : 14.200MHz MODE : CW [CAR] VR : Center Disconnect CN4 from the RF unit and connect a 50Ω dummy load. Transmit	50Ωdummy Oscilloscope	RF	CN4	RF Connection	L99,98 L95,94 L92,91 L89 VR3 L457 L456 L455	Repeat 2 or 3 times for MAX.	Reference value 2.5Vp-p or more
	2) After adjustment, set [CAR] VR to MAX for confirmation.							

ADJUSTMENT

Item	Condition	Measurement			Adjustment			Specifications/Remarks
		Test-equipment	Unit	Terminal	Unit	Parts	Method	
3. Final base current	1) Display f. : 14.200MHz MODE : USB [MIC] VR : MIN [CAR] VR : MIN Final unit VR501,502 : MIN Connect ammeter + : External power supply – : Power connector Adjust to minimum current with VR501 and VR502 in the final unit Transmit	Ammeter			Final	VR501	Current drain (Minimum current) +250mA	First adjust VR501 and VR502 for minimum. Adjust VR501 for an increase of 250mA when switched to TX. Then adjust VR502 for 250mA over this reading.
						VR502	Current drain (Minimum current) + driver current (250mA) + 250mA.	
• Item 4 to 13 below are adjusted in the adjustment mode. To terminate the adjustment menu in the middle, save your settings with Menu No. BA.								
4. ALC adj.	1) Menu No. : A7 Transmit	Power meter	Rear panel	ANT	Front panel	[RIT/XIT] knob	100W	±5.0W
5. NULL adj.	1) Menu No. : A7 Transmit	Power meter DC V.M	Rear panel Filter	ANT CN5	Filter	TC1	MIN.	Reference value 0.5V or less
6. ALC frequency response adj.	1) TX [M.CH] key : Push Display f. : 29.700MHz MODE : CW Transmit	Power meter	Front panel	ANT	Filter	VR1	95W	±5.0W
	2) TX [M.CH] key : Push Menu No. : A7 Transmit						100W power check	100W ± 5W When unable to be set within the range, ALC and frequency response to be adjusted.
7. TX power adj. The power meter on the display is also calibrat--ed at the same time.	1) 50W Menu No. : A8 Transmit After adjustment, [UP] key : Push	Power meter	Rear panel	ANT	Front panel	[RIT/XIT] knob	50W	±3.0W
	2) 25W Menu No. : A9 Transmit After adjustment, [UP] key : Push						25W	±2.0W
	3) 10W Menu No. : AA Transmit After adjustment, [UP] key : Push						11W	±2.0W
8. TX gain adj.	1) 1.9MHz band Menu No. : AB Transmit	Power meter	Rear panel	ANT	Front panel	[UP] key	Press the [UP] key after the beep sounds for two or three seconds.	
	2) 3.5MHz band Menu No. : AC Transmit							
	3) 7.0MHz band Menu No. : AD Transmit							
	4) 10.1MHz band Menu No. : AE Transmit							
	5) 14.1MHz band Menu No. : AF Transmit							

ADJUSTMENT

Item	Condition	Measurement			Adjustment			Specifications/Remarks
		Test-equipment	Unit	Terminal	Unit	Parts	Method	
	6) 18.0MHz band Menu No. : B0 Transmit	Power meter	Rear panel	ANT	Front panel	[UP] key	Press the [UP] key after the beep sounds for two or three seconds.	
	7) 21.0MHz band Menu No. : B1 Transmit							
	8) 24.9MHz band Menu No. : B2 Transmit							
	9) 29.7MHz band Menu No. : B3 Transmit							
9. ALC meter adj.	1) 1 dot Menu No. : B4 Transmit	Power meter	Rear panel	ANT	Front panel	[UP] key	[UP] key : Push	
	2) Zone MAX Menu No. : B5 Transmit							
	3) Full Menu No. : B6 Transmit							
10. SWR protection adj.	1) Nenu No. : B7 Transmit After adjustment, [UP] key : Push	Through type power meter 150Ωdummy	Rear panel	ANT	Front panel	[RIT/XIT] knob	40W	±3.0W
11. SWR meter adj.	1) Menu No. : B8 Transmit					[UP] key	[UP] key : Push	
12. FM DEV adj.	1) Menu No. : B9 AG output : 1kHz/30mV Transmit	Power meter Linear detector AG	Rear panel	ANT	Front panel	[RIT/XIT] knob	4.6kHz	±0.1kHz
13. FM MIC sense check	1) Menu No. : B9 AG output : 1kHz/3mV **E,X** AG output : 1kHz/5mV **K,P,M**		Front panel	MIC			Check	3.0kHz ± 0.5kHz
• Writing data : After items 4 to 13 have been adjusted: 1) Menu No. : BA 2) [UP] key : Push once time Display "rEAdy" → "good" (If "nG" is displayed, enter data again.) 3) [CLR] key : Push once time (Adjustment mode terminated)								
14. Spurious adj.	1) Display f. : 24.900MHz MODE : CW Transmit	Power meter Spectrum analyzer	Rear panel	ANT	RF	VR2	±1.65MHz spurious level MIN.	–60dB or less
15. Monitor level check	1) Display f. : 21.100MHz MODE : USB [MONI] key : ON [MONI] VR : Center [MIC] VR : Center [AF] VR : MIN AG output : 1kHz/10mV Transmit	Power meter AF V.M Oscilloscope DM. SP AG AF V.M	Rear panel Front panel	ANT EXT. SP MIC	Front panel	Display	Check	0.2V ± 0.05V

ADJUSTMENT

Item	Condition	Measurement			Adjustment			Specifications/Remarks
		Test-equipment	Unit	Terminal	Unit	Parts	Method	
16. Processor check	1) Display f. : 14.200MHz MODE : USB [MIC] VR : Center [PROC] key : ON [METER] : COMP AG output : 1kHz/10mV	Power meter AG AF V.M	Rear panel Front panel	ANT MIC	Front panel	Display	Check	COMP meter : 15~25dB
	2) AG output : 1kHz/1mV							COMP meter : 1dot light
17. Sidetone check	1) Display f. : 14.200MHz MODE : CW [MONI] VR : Center Key down	AF V.M Oscilloscope DM. SP Electronic keyer jig	Rear panel	EXT. SP KEY			Check	0.63V ± 0.3V
18. CW break-in check	1) Display f. : 14.200MHz MODE : CW [VOX] key : ON [FULL/SEMI] key : FULL	Power meter Oscilloscope Electronic keyer jig	Rear panel	ANT KEY			Electronic keyer jig : Key down	Full break-in operation (When the key is turned OFF, the receive mode returns immediately.)
	2) [FULL/SEMI] key : SEMI [DELAY] knob : Center							Semi break-in operation (When the key is turned OFF, the receive mode returns after a while.)
19. DRU check (equipped on DRU-3)	1) Connect a microphone to the MIC jack. MODE : USB/LSB [MIC] VR : Center [REC] key : Push						Hold down the [CH1], and talk into the microphone.	Can be recorded for about 15 seconds.
							Release and press the [CH1] key again.	The recorded voice must be played back.
20. Sub tone check	1) Display f. : 29.100MHz MODE : FM MIC jack : 600Ω terminated [A=B], [TX-B] key : Push [M.IN] key : Push two times [RX-M.CH] : Push Transmit	Power meter Linear detector Oscilloscope f. counter Microphone	Rear panel Front panel	ANT MIC			Check	DEV : ±0.5~1.0kHz Tone f. : 88.2~88.7Hz
21. TX frequency check	1) Display f. : 29.100MHz MODE : CW Transmit							29.100.000MHz ± 145Hz
22. TX frequency characteristic check	1) Display f. : 14.200MHz MODE : USB/LSB MIC jack : Connect to AG AG output : 1kHz/5mV 400Hz/5mV 2.6kHz/5mV Transmit	Power meter Oscilloscope AG AF V.M	Rear panel Front panel	ANT MIC			a. Set AG to 1.0kHz and turn the [MIC] VR to set to 100W. b. Change the AG frequency and measure the difference between the power levels at 1.0kHz and at another frequency c. Take a measurement for each USB and LSB.	Within 6dB

ADJUSTMENT

Item	Condition	Measurement			Adjustment			Specifications/Remarks
		Test-equipment	Unit	Terminal	Unit	Parts	Method	
23. Processor check	1) Display f. : 14.200MHz MODE : USB [PROC] key : ON [METER] key : Push [PROC] VR : MIN MIC jack : Connect to AG AG output : 1.0kHz/1mV Transmit						Change [PROC] VR so that the first segment on the COMP meter lights.	
	2) AG output : 1.0kHz /10mV (20dB UP) Transmit						Check	COMP meter : within 15~25dB
24. AT	1) Display f. : Indicated below MODE : CW [METER] : SWR [THRU/AUTO] : AUTO Transmit After checked retuen to receive mode.	Through type power meter 150Ωdummy	Rear panel	ANT	Front panel	Display	Check	ON AIR LED light. AT TUNE LED light. When tuning completed, LEDs off.
	2) [AT TUNE] key : ON	Frequency 1.910MHz 3.500 3.700 7.000 10.100 14.000 18.100 21.000 24.900 29.700			AT	TC1	Note : When 29.700MHz and SWR 1.0 to 1.3, variiable capacitor has flutters so that it does not stop, adjust the TC1 at which SWR 1.2 or less is acceptable.	Begins AT tuning after entering the transmission state. This should stop within roughly 6 seconds. SWR : 1.2 or less Power : 70W or more

Adjustment Points

■ Side view

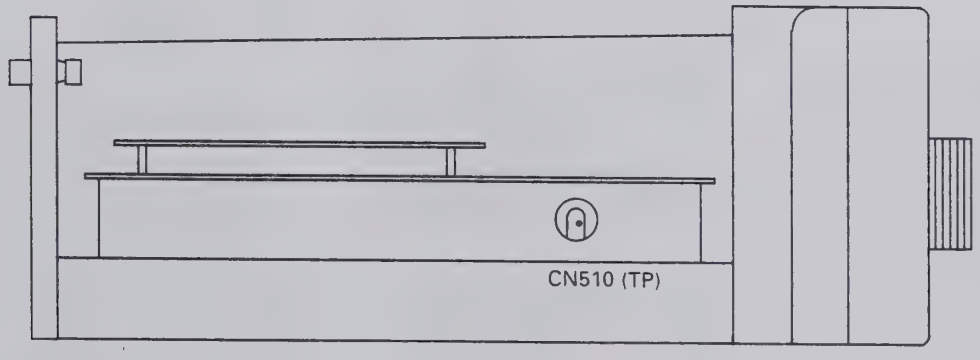

ADJUSTMENT

■ Upper view

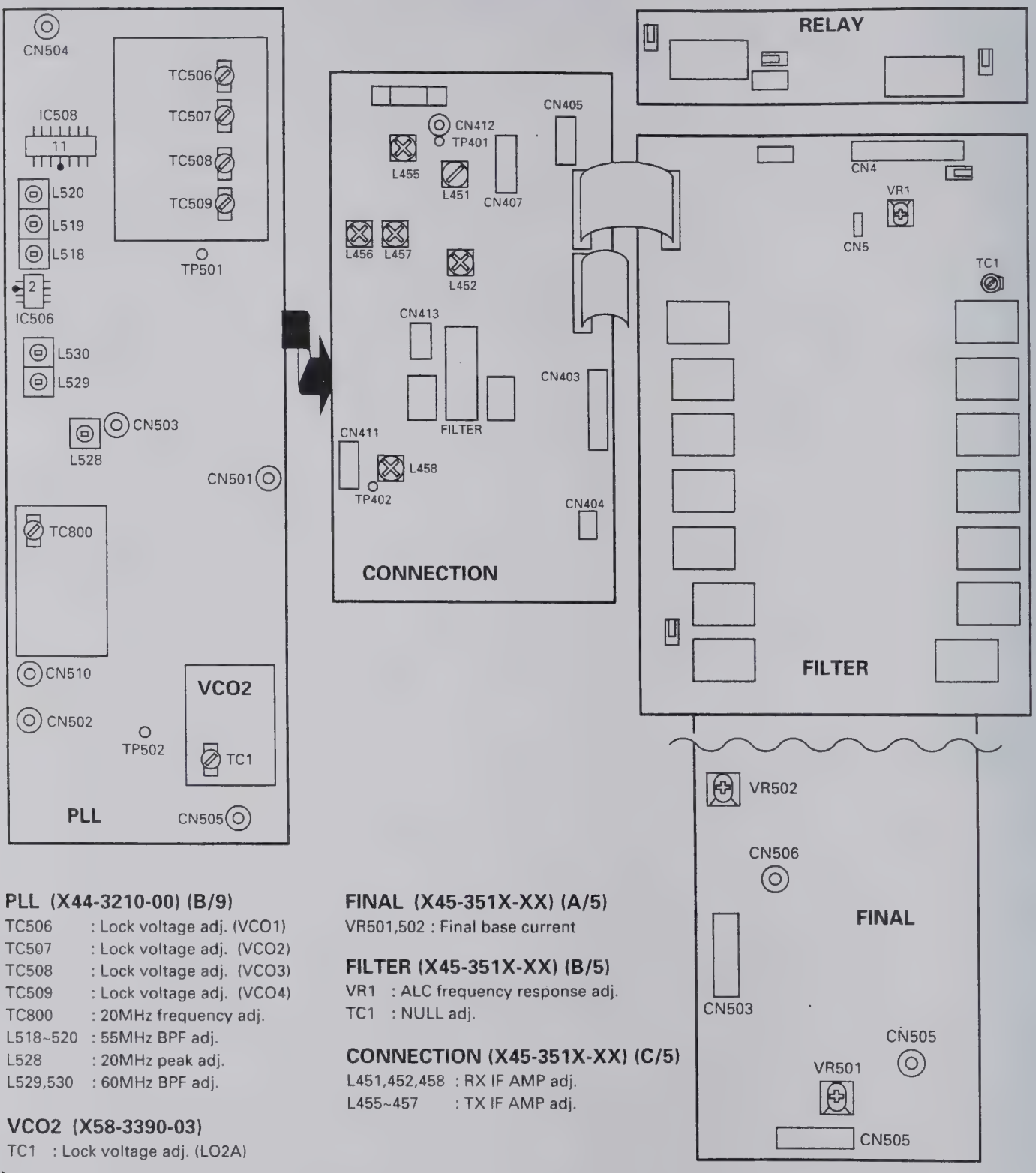

PLL (X44-3210-00) (B/9)

TC506 : Lock voltage adj. (VCO1)
TC507 : Lock voltage adj. (VCO2)
TC508 : Lock voltage adj. (VCO3)
TC509 : Lock voltage adj. (VCO4)
TC800 : 20MHz frequency adj.
L518~520 : 55MHz BPF adj.
L528 : 20MHz peak adj.
L529,530 : 60MHz BPF adj.

VCO2 (X58-3390-03)

TC1 : Lock voltage adj. (LO2A)

FINAL (X45-351X-XX) (A/5)

VR501,502 : Final base current

FILTER (X45-351X-XX) (B/5)

VR1 : ALC frequency response adj.
TC1 : NULL adj.

CONNECTION (X45-351X-XX) (C/5)

L451,452,458 : RX IF AMP adj.
L455~457 : TX IF AMP adj.

ADJUSTMENT

■ **Lower view**

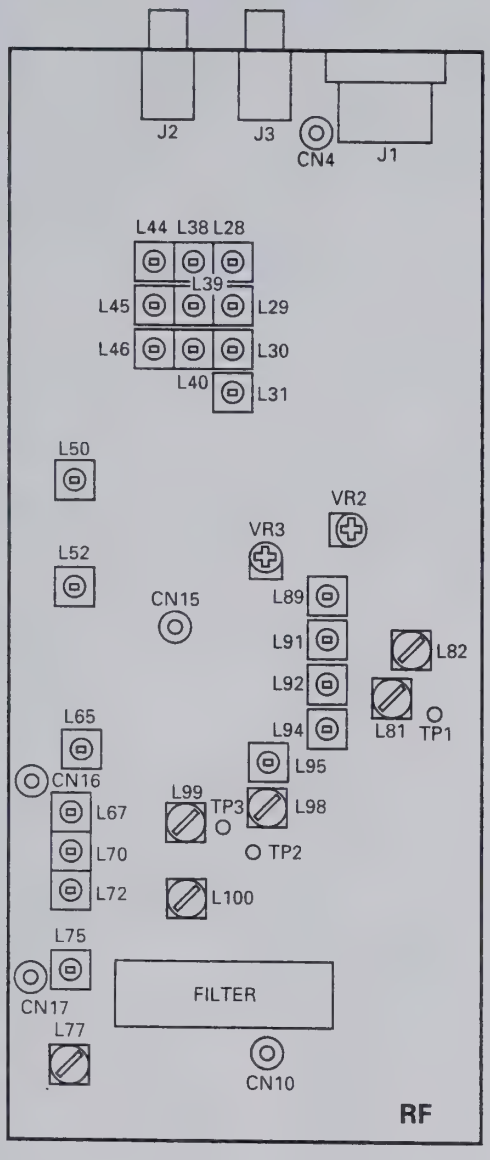

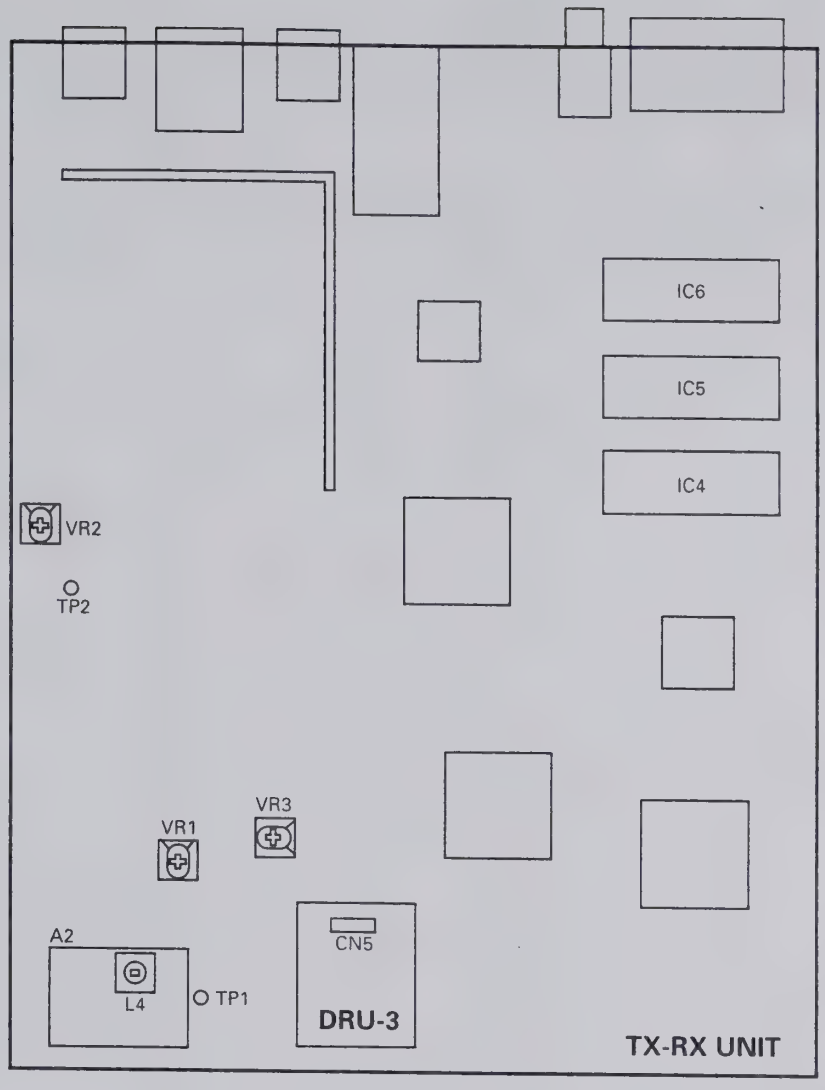

RF (X44-3210-00) (A/9)

VR2	: Spurious adj.
VR3,L89,91,92,94,95,98,99	: TX IF AMP adj.
L28~31,38~40,44~46,50,52	: BPF adj.
L65,67,70,72	: MCF adj.
L75,77	: RX IF AMP adj.
L81,82	: NB adj.
L100	: TX MCF adj.

TX-RX UNIT (X57-4620-00)

VR1 : S-meter adj.
VR2 : AGC voltage adj.
VR3 : DRU-3 recording level adj. (Adjusted to the mechanical center)
L4 : DSP PLL lock voltage adj.

TERMINAL FUNCTION

CN No.	Pin No.	Name	Function
RF UNIT (X44-3210-00) (A/9) : RF			
CN2	Coaxial	RAT	RX signal
CN4	Coaxial	DRV	TX drive signal
CN5	Coaxial	LO1	1st local oscillation 73.08~103.05MHz
CN6	Coaxial	LO2A	2nd local oscillation 64.22MHz
CN7	1	TXB	TX 8V
	2	RXB	RX 8V
	3	AGC	AGC voltage
CN10	Coaxial	TR88	RX IF output/TX IF input 8.83MHz
CN13	1	SPO	Speaker signal
	2	CKY	Keying signal
	3	AGC	AGC voltage
	4	TXC	TX : "H"
	5	RXC	RX : "H"
	6	8A	Analog 8V
	7	14S	14V-switched
	8	GND	GND
CN14	1	15K	Filter selection 15kHz
	2	3K	Filter selection 3kHz
	3	6K	Filter selection 6kHz
	4	VSF	Forward wave detection voltage
	5	VSF	Reflected wave detection voltage
	6	ALM	ALC meter output
	7	THP	Thermal protection
	8	NC	
	9	UCK2	RF serial/parallel convert clock
	10	UDA2	RF serial/parallel convert data
	11	ENR1	RF serial/parallel convertor IC1 enable
	12	ENR2	RF serial/parallel convertor IC2 enable
	13	ENR3	DAC enable
	14	NC	
	15	RBK	RF blank signal
	16	–6	–6V
	17	GND	GND
	18	NC	
	19	SS	TX/RX control signal TX : "L"
	20	NC	
J1	1	SPO	Speaker signal
	2	COM	Relay common terminal
	3	SS	TX/RX control signal
	4	MKE	TX relay close
	5	BRK	TX relay open
	6	ALC	ALC input
	7	RL	13V output when TX
J2		EXT RX	External receiver output
J3		IF OUT	SM-230
RF UNIT (X44-3210-00) (B/9) : PLL			
CN500	1	GND	GND
	2	NFMT	FM modulation on/off signal (FM TX : "L")
	3	VB3	21.489~30MHz } VCO select signal Active "H"
	4	VB2	14.489~21.489MHz
	5	VB1	7.489~14.489MHz
	6	VB0	0~7.489MHz
	7	UNL	Unlock detection output (Unlock : "H")
	8	GND	GND
	9	PLE2	PLL2 enable signal (LO2A)
	10	PLE1	PLL1 enable signal (LO1)
	11	PCK	Clock
	12	PDA	PLL, DDS data
	13	14D	14V
	14	DLE3	DDS3 enable signal (LO4)
	15	DLE2	DDS2 enable signal (LO3)
	16	DLE1	DDS1 enable signal (LO1)
	17	TXC	PLL DDS latch select signal (TX : "H")
	18	GND	GND
	19	9P	9V
	20	5P	5V
CN501	1	GND	GND
	2	LO4	DDS3 output
CN502	Coaxial	LO3	DDS2 output (8.375MHz)
CN503	Coaxial	REF	Reference signal output for TX-RX unit (20MHz)
CN504	Coaxial	LO1	LO1 output (73.08~103.05MHz)
CN505	Coaxial	LO2A	LO2A output (64.22MHz)
CN506	1	FMD	FM modulation signal
	2	GND	GND
	3	GND	GND
RF UNIT (X44-3210-00) (D/9) : PHONE			
CN901	1	SPI1	Phone jack through
	2	SPG	GND
	3	SPO1	Phone jack output
RF UNIT (X44-3210-00) (E, F, G, H, I/9) : VR			
CN903	1	DGND	Digital GND
	2	VPWR	MIC/PWR VR 1
	3	VMIC	MIC/PWR VR 2
	4	VDLY	CAR/DELAY VR 1
	5	VCAR	CAR/DELAY VR 2
	6	5D	5V
CN904	1	DGND	Digital GND
	2	VMON	PROC/MONI VR 1
	3	VPRC	PROC/MONI VR 2
	4	VKEY	AGC/KEY VR 1
	5	VAGC	AGC/KEY VR 2
	6	5D	5V
CN905	1	NC	
	2	WENB	Width encoder B
	3	WENA	Width encoder A
	4	SENB	Shift encoder B
	5	SENA	Shift encoder A
	6	GND	GND
CN906	1	GND	GND
	2	VRF	AF/RF VR 1
	3	VAF	AF/RF VR 2
	4	RENA	RIT encoder A
	5	RENB	RIT encoder B
	6	5D	5V
CN907	1	GND	GND
	2	VSQL	NB/SQL VR 1
	3	VNB	NB/SQL VR 2
	4	CENA	M.CH encoder A
	5	CENB	M.CH encoder B
	6	5D	5V
FINAL UNIT (X45-351X-XX) (A/5) : FINAL			
CN501	Coaxial	DRV	Drive input (From RF)
CN502	Coaxial	PO	TX signal output (To FILTER)
CN503	1	14S	13.8V
	2	14S	13.8V
	3	TXB	TX 13.8V
	4	GND	GND
	5	GND	GND
CN504	1	14V	13.8V
	2	14V	13.8V
	3	GND	GND

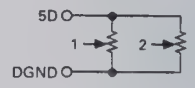

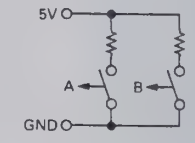

TERMINAL FUNCTION

CN No.	Pin No.	Name	Function
W501	Board	14F	Power supply 13.8V connecting harness
	in	14F	Power supply 13.8V connecting harness
		GND	Power supply 13.8V connecting harness
		GND	Power supply 13.8V connect ing harness
FIANL UNIT (X45-351X-XX) (B/5) : FILTER			
CN1	Coaxial	PO	Filter input signal
CN2	Coaxial	ATO	TX output signal (To AT)
CN3	1	8A	8V
	2	GND	GND
	3	GND	GND
	4	14S	14V
	5	14S	14V
	6	UCK2	Shift register clock
	7	UDA2	Shift register data
	8	ENF1	Shift register enable
	9	DGND	Digital GND
	10	TXB	TX power 8V
	11	VSF	Forward wave detection voltage
	12	VSR	Reflected wave detection voltage
CN4	1	ATA	Make for AT through/on relay
	2	28AT	24.5~30MHz
	3	25AT	21.5~24.5MHz
	4	18AT	18.5~21.5MHz
	5	14AT	14.5~18.5MHz
	6	10AT	10.5~14.5MHz
	7	7AT	4.0~7.5MHz
	8	4AT	2.5~4.0MHz
	9	GND	GND
	10	14S	14V
	11	GND	GND
W1	1	RL	TX/RX select signal output
	2	ANTS	ANT 1/2 select signal output
	3	GND	GND
FINAL UNIT (X45-351X-XX) (C/5) : CONNECTION			
CN401	1	15K	455kHz filter select "L" : Filter on
	2	3K	455kHz filter select "L" : Filter on
	3	6K	455kHz filter select "L" : Filter on
	4	TT	External AT tuning control (Pass through)
	5	TS	External AT tuning control (Pass through)
	6	UCK2	Pass through
	7	UDA2	Pass through
	8	ENF1	Pass through
	9	VSF	Pass through
	10	VSR	Pass through
	11	THP	Pass through
	12	14D	14V
	13	14D	14V
	14	14V	14V
	15	14V	14V
	16	PWS	Power switch on : "H"
	17	9P	PLL power 9V
	18	5P	PLL power 5V
	19	–6	–6V output
	20	GND	GND
CN402	1	8A	8V
	2	GND	GND
	3	GND	GND
	4	14S	13.8V
	5	14S	13.8V
	6	UCK2	Pass through
	7	UDA2	Pass through
	8	ENF1	Pass through
	9	DGND	Digital GND
	10	TXB	TX power 8V
	11	VSF	Pass through
	12	VSR	Pass through
CN403	1	14A	13.8V
	2	14S	13.8V
	3	8D	Digital 8V
	4	8A	Analog 8V
	5	APG	GND
	6	SPO3	Speaker output signal input
	7	SPG	Speaker GND
CN404	1	SPG	Speaker GND
	2	SP	Speaker output signal
CN405	1	14S	13.8V
	2	14S	13.8V
	3	AGND	Analog GND
	4	AGND	Analog GND
CN406	1	THP	Pass through
	2	TXB	Pass through
	3	14D	13.8V
	4	8D	Digital 8V
	5	14D	13.8V
	6	8A	Analog 8V
	7	GND	GND
	8	GND	GND
	9	14S	13.8V
	10	14S	13.8V
	11	14S	13.8V
	12	PSW	Power switch on : "H"
	13	14V	13.8V
CN407	1	14S	13.8V
	2	AGND	Analog GND
	3	TT	Pass through
	4	TS	Pass through
	5	GND	GND
CN410	Coaxial	LO3	Local LO3 8.375MHz (From PLL)
CN411	1	TIF	TX IF input
	2	GND	GND
	3	RIF	RX IF output
	4	GND	GND
CN412	Coaxial	TR88	8.83MHz
CN413	1	TXB	TX power 8V
	2	RXB	RX power 8V
	3	AGC	AGC line
FINAL UNIT (X45-351X-XX) (D/5) : AVR			
CN601	1	14V	13.8V
	2	14V	13.8V
	3	GND	GND
CN602	1	14S	13.8V
	2	14S	13.8V
	3	AGND	Analog GND
	4	AGND	Analog GND
CN603	1	THP	Thermal protection on : "H"
	2	TXB	TX 13.8V
	3	14D	13.8V
	4	8D	Digital 8V
	5	14D	Digital 13.8V
	6	8A	Analog 8V
	7	GND	GND
	8	GND	GND
	9	14S	13.8V
	10	14S	13.8V

AT coil tap band data

TERMINAL FUNCTION

CN No.	Pin No.	Name	Function
	11	14S	13.8V
	12	PSW	Power switch on : "H"
	13	14V	13.8V
CN604	1	14S	13.8V
	2	14S	13.8V
	3	TXB	TX 13.8V
	4	GND	GND
	5	GND	GND
CN605	1	MOT+	Moter drive +
	2	MOT –	Motor drive –
FINAL UNIT (X45-351X-XX) (E/5) : RELAY			
CN301	1	RL	TX/RX select signal input
	2	ANTS	ANT 1/2 select signal input
	3	GND	GND
CN302	Coaxial	ATO	TX signal input (From FILTER)
CN303	Coaxial	RAT	RX signal output (To RF)
CN304	Coaxial	AT1	Input/output to AT (RX : Output, TX : Input)
CN305	Coaxial	AT2	Input/output to AT (RX : Input, TX : Output)
CN306	TP		ANT1 GND
CN307	TP		ANT2 GND
W301	TP		ANT1 signal line
W303	TP		ANT2 signal line
AT UNIT (X53-3340-02)			
CN1	Coaxial	AT1	AT input
CN2	Coaxial	AT2	AT output
CN3	1	VRE	+5V reference voltage for A/D
	2	POD2	VC2 position detection, VR101 output
	3	GND	GND
	4	POD1	VC1 position detection, VR102 output
CN4	1	NC	
	2	M2–	Motor 2 drive –
	3	M2+	Motor 2 drive +
	4	M1–	Motor 1 drive –
	5	M1+	Motor 1 drive +
CN5	1	NC	
	2	F15	Power line 11~14V
	3	GND	GND
CN6	1	ATA	Make for AT through/on relay "L" : On
	2	NC	
CN7	1	ATG	GND for discriminating that is connected to microcomputer
	2	SPED	Motor speed control pulse
	3	APRE	Control selection "H" : Preset type, "L" : Auto tuning type
	4	VRE	+5V reference voltage for A/D
	5	PR22	Motor 2 control signal
	6	PR21	Motor 2 control signal
	7	POD2	VC2 position detection
	8	PR12	Motor 1 control signal
	9	PR11	Motor 1 control signal
	10	POD1	VC1 position detection
	11	GND	GND
CN101	1	28AT	24.5~30MHz
	2	15AT	21.5~24.5MHz
	3	NC	
	4	18AT	18.5~21.5MHz
	5	14AT	14.5~18.5MHz
	6	10AT	10.5~14.5MHz
	7	7AT	4.0~7.5MHz
	8	4AT	2.5~4.0MHz

AT coil tap band data

CN No.	Pin No.	Name	Function
	9	GND	GND
CONTROL UNIT (X53-356X-XX) (A/4) : CONTROL			
CN1	1	GND	GND
	2	NFMT	Not FM TX signal
	3	VB3	VCO selest signal
	4	VB2	VCO select signal
	5	VB1	VCO select signal
	6	VB0	VCO select signal
	7	UNL	PLL unlock signal
	8	GND	GND
	9	PLE2	PLL2 enable signal
	10	PLE1	PLL1 enable signal
	11	PCK	PLL serial clock
	12	PDA	PLL serial data
	13	14D	Digital 13.8V
	14	DLE3	DDS3 enable signal
	15	DLE2	DDS2 enable signal
	16	DLE1	DDS1 enable signal
	17	TXC	TX control signal
	18	GND	GND
	19	9P	PLL power 9V (Pass through)
	20	5P	PLL power 5V (Pass through)
CN2	1	GND	GND
	2	–6	–6V (Pass through)
	3	5P	PLL power 5V (Pass through)
	4	9P	PLL power 9V (Pass through)
	5	PSW	Power control signal
	6	14V	13.8V
	7	14V	13.8V
	8	14D	Digital 13.8V
	9	14D	Digital 13.8V
	10	THP	Thermal protection
	11	VSR	Reflected wave analog voltage
	12	VSF	Forward wave analog voltage
	13	ENF1	Enable for IC1 on FILTER board
	14	UDA2	Serial data for IC1 on FILTER board
	15	UCK2	Serial clock for IC1 on FILTER board
	16	TS	AT-300 control signal
	17	TT	AT-300 control signal
	18	6K	6kHz filter select signal
	19	3K	3kHz filter select signal
	20	15K	15kHz filter select signal
CN3	1	5D	Digital 5V
	2	MENA	Main encoder pulse A
	3	MENB	Main encoder pulse B
	4	DGND	Digital GND
CN4	1	NC	
	2	NC	
	3	SPED	Internal AT speed control signal
	4	APRE	Internal AT control select signal
	5	VRE	Reference voltage for A/D convertor
	6	PR22	Motor 2 control signal
	7	PR21	Motor 2 control signal
	8	POD2	Motor 2 position voltage
	9	PR12	Motor 1 control signal
	10	PR11	Motor 1 control signal
	11	POD1	Motor 1 position voltage
	12	GND	GND
CN5	1	GND	GND
	2	CTS	Communication inhibit signal from TS-870S
	3	RTS	Communication inhibit signal from personal computer
	4	RXD	TX data from TS-870S
	5	TXD	RX data from personal computer

TERMINAL FUNCTION

CN No.	Pin No.	Name	Function
	6	KEYS	Key jack sensing signal
	7	DASH	Electronic keyer dash signal
	8	DOT	Electronic keyer dot signal
	9	GND	GND
	10	H0	DSP control data bus
	11	H1	DSP control data bus
	12	H2	DSP control data bus
	13	H3	DSP control data bus
	14	H4	DSP control data bus
	15	H5	DSP control data bus
	16	H6	DSP control data bus
	17	H7	DSP control data bus
	18	HENA	DSP A enable signal
	19	HENB	DSP B enable signal
	20	HRW	DSP read/write control signal
CN6	1	GND	GND
	2	HA0	DSP control address bus
	3	HA1	DSP control address bus
	4	HA2	DSP control address bus
	5	GND	GND
	6	BEEP	Beep control signal
	7	MD	Microphone down signal
	8	MU	Microphone up signal
	9	SS	Standby switch
	10	GND	GND
	11	KEY	Key down signal
	12	DRST	DSP reset signal
	13	CKY	TX wave control signal
	14	RXC	RX control signal
	15	TXC	TX control signal
	16	AMUT	AF mute signal
	17	VCEN	TX-RX unit IC26 enable
	18	UCK2	TX-RX unit serial clock
	19	UDA2	TX-RX unit serial data
	20	DREN	DRU-3 control enable signal
	21	PLUL	TX-RX unit PLL unlock signal
	22	PLEN	TX-RX unit PLL control enable signal
	23	EOM	DRU-3 end of message
	24	VBSY	VS-2 busy signal
	25	STR	VS-2 synthesize control signal
	26	GND	GND
CN7	1	5D	Digital 5V
	2	VAGC	AGC VR analog voltage
	3	VKEY	KEY VR analog voltage
	4	VPRC	PROC VR analog voltage
	5	VMON	MONI VR analog voltage
	6	DGND	Digital GND
	7	NC	
	8	5D	Digital 5V
	9	VCAR	CAR VR analog voltage
	10	VDLY	DELAY VR analog voltage
	11	VMIC	MIC VR analog voltage
	12	VPWR	PWR VR analog voltage
	13	DGND	Digital GND
CN8	1	5D	Digital 5V
	2	14D	Digital 13.8V
	3	14D	Digital 13.8V
	4	ENL2	LCD driver control enable signal
	5	ENL3	LCD driver control enable signal
	6	UDA1	LCD driver control serial data
	7	UCK1	LCD driver control serial clock
	8	BLANK	LCD goes off control signal
	9	DIM	LCD dimmer control signal
	10	GND	GND

CN No.	Pin No.	Name	Function
CN9	1	BLNK	LED goes off control signal
	2	K0	Key input 0
	3	K1	Key input 1
	4	K2	Key input 2
	5	K3	Key input 3
	6	K4	Key input 4
	7	K5	Key input 5
	8	K6	key input 6
	9	K7	Key input 7
	10	PSW	Power switch input signal
	11	ENL4	Enable for IC501 on SW board
	12	ENL1	Enable for IC502~504 on SW board
	13	UDA1	Serial data for SW board
	14	UCK1	Serial clock for SW board
	15	LATC	AT tune LED control signal
	16	TXC	TX control signal (TX LED control)
	17	RES	IC501~504 reset signal
	18	5V	5V
	19	5D	Digital 5V
	20	DGND	Digital GND
CN10	1	NC	
	2	WENB	Width encoder pulse B
	3	WEBA	Width encoder pulse A
	4	SENB	Shift encoder pulse B
	5	SENA	Shift encoder pulse A
	6	GND	GND
	7	NC	
	8	5D	Digital 5V
	9	RENB	RIT encoder pulse B
	10	RENA	RIT encoder pulse A
	11	VAF	AF VR analog voltage
	12	VRF	RF VR analog voltage
	13	GND	GND
	14	NC	
	15	5D	Digital 5V
	16	CENB	Click encoder pulse B
	17	CENA	Click encoder pulse A
	18	VNB	NB VR analog voltage
	19	VSQL	SQL VR analog voltage
	20	GND	GND
CN11	1	NC	
	2	SS	Standby switch
	3	NC	
	4	GND	GND
	5	–6	–6V
	6	RBK	RF mute signal
	7	NC	
	8	ENR3	Enable for IC7 on RF board
	9	ENR2	Enable for IC2 on RF board
	10	ENR1	Enable for IC1 on RF board
	11	UDA2	Serial data for RF board
	12	UCK2	Serial clock for RF board
	13	NC	
	14	THP	Thermal protection
	15	ALM	ALC meter analog voltage
	16	VSR	Reflected wave analog voltage
	17	VSF	Forward wave analog voltage
	18	6K	6kHz filter select signal
	19	3K	3kHz filter select signal
	20	15K	15kHz filter select signal
CONTROL UNIT (X53-356X-XX) (B/4) : SW			
CN501	1	DGND	Digital GND
	2	5D	Digital 5V

TERMINAL FUNCTION

CN No.	Pin No.	Name	Function
	3	5V	5V
	4	RES	IC501~504 reset signal
	5	TXC	TX control signal (TX LED control)
	6	LATC	AT tune LED control signal
	7	UCK1	Serial clock
	8	UDA1	Serial data
	9	ENL1	IC502~504 enable
	10	ENL4	IC501 enalbe
	11	PSW	Power switch output signal
	12	K7	Key output 7
	13	K6	Key output 6
	14	K5	Key output 5
	15	K4	Key output 4
	16	K3	Key output 3
	17	K2	Key output 2
	18	K1	Key output 1
	19	K0	Key output 0
	20	BLNK	LED goes off control signal
CONTROL UNIT (X53-356X-XX) (D/4) : MIC			
CN902	1	SS	Standby switch
	2	MD	Microphone down signal
	3	MU	Microphone up signal
	4	8M	8V for microphone
	5	MCG	GND
	6	MSG	MIC GND
	7	MIC	Microphone signal output
TX-RX UNIT (X57-4620-00)			
CN1	1	TIF	TX IF output (455kHz)
	2	GND	TIF GND
	3	RIF	RX IF input (455kHz)
	4	GND	RIF GND
CN3	1	LO4	Local 4 input (466kHz)
	2	GND	LO4 GND
	3	FMD	FM modulation output (To PLL)
	4	GND	FMD GND
CN4	1	MIC	Microphone signal input
	2	MSG	MIC GND
	3	MCG	GND
	4	SS	Microphone standby switch
	5	MU	Microphone up
	6	MD	Microphone down
	7	8M	8V for microphone
CN5	1	GND	GND
	2	DRMG	MIC GND
	3	DRM	Microphone signal output
	4	DRO	DRU-3 playback signal input
	5	5D	Digital 5V for DRU-3
	6	GND	GND
	7	EOM	End of message (End : "H")
	8	OVF	Over flow signal (Over flow : "L")
	9	DREN	DRU-3 enable
	10	SD	DRU-3 serial data
	11	SCK	DRU-3 clock
CN6	1	VO	Audio signal
	2	GND	GND
	3	SD	VS-2 control data
	4	SCK	VS-2 control data clock
	5	BSY	VS-2 busy
	6	STR	VS-2 synthesize control
	7	5C	5V for VS-2
	8	GND	GND
CN7	1	GND	GND

CN No.	Pin No.	Name	Function
	2	HA0	DSP data address
	3	HA1	DSP data address
	4	HA2	DSP data address
	5	GND	GND
	6	BEEP	Beep control signal
	7	MD	Microphone down signal
	8	MU	Microphone up signal
	9	SS	Standby switch
	10	GND	GND
	11	KEY	Key down signal
	12	DRST	DSP reset signal
	13	CKY	TX wave control signal
	14	RXC	RX control signal
	15	TXC	TX control signal
	16	AMUT	AF mute signal
	17	VCEN	IC26 enable
	18	UCK2	Serial clock for TX-RX unit
	19	UDA2	Serial data for TX-RX unit
	20	DREN	DRU-3 enable
	21	PLUL	TX-RX unit PLL unlock signal output
	22	PLEN	TX-RX unit PLL enable
	23	EOM	DRU-3 end of message signal output
	24	VBSY	VS-2 busy signal
	25	STR	VS-2 synthesize control signal
	26	GND	GND
CN8	1	GND	GND
	2	CTS	TX inhibit signal from TS-870S
	3	RTS	TX inhibit signal from personal computer
	4	RXD	TX data from TS-870S
	5	TXD	RX data from personal computer
	6	KEYS	Key jack sensing signal
	7	DASH	Electronic keyer dash signal
	8	DOT	Electronic keyer dot signal
	9	GND	GND
	10	H0	DSP data bus
	11	H1	DSP data bus
	12	H2	DSP data bus
	13	H3	DSP data bus
	14	H4	DSP data bus
	15	H5	DSP data bus
	16	H6	DSP data bus
	17	H7	DSP data bus
	18	HENA	DSP A enable signal
	19	HENB	DSP B enable signal
	20	HRW	DSP read/write control signal
CN9	1	14A	Analog 13.8V
	2	8D	Digital 8V
	3	14S	13.8V
	4	8A	Analog 8V
	5	APG	GND
CN10	1	SPI1	AF input when headphone through
	2	SPG	GND
	3	SPO1	Headphone AF output
CN11	1	GND	GND
	2	14S	13.8V
	3	8A	Analog 8V
	4	RXC	RX : "L"
	5	TXC	TX : "H"
	6	AGC	AGC voltage
	7	CKY	Keying signal
	8	SPO1	Speaker signal output
CN12	1	SPO3	Internal speaker AF output
	2	SPG	GND

TERMINAL FUNCTION

CN No.	Pin No.	Name	Function
CN13	Coaxial	REF	20MHz reference signal for PLL, DPS (From PLL)
J1	1	GND	GND
EXT.SP	2	NC	
	3	NC	
	4		External speaker signal output
	5		Signal input when external speaker not connected
J2	1	GND	GND
Paddle	2	NC	
	3	NC	
	4	NC	
	5	DASH	Electronic keyer dash signal
	6	DOT	Electronic keyer dot signal
	7	NC	
	8	NC	
	9	NC	
	10	KEYS	Key switch signal
	11	KEYS	Open when using paddle
J4	1		GND
RTTY	2		RTTY signal
	3		GND
	4		RTTY signal
J5	1	NC	
ACC2	2	NC	
	3	ANO	RX audio output
	4	GND	ANO GND
	5	PSQ	Squelch open : GND, Squelch close : open
	6	SMET	S-meter voltage output
	7	NC	
	8	GND	GND
	9	PKS	Standby switch when using PKD input (Front panel microphone input is muted)
	10	NC	
	11	PKD	TX input
	12	GND	PKD GND
	13	SS	Standby switch

CN No.	Pin No.	Name	Function
J6	1	GND	GND
KEY	2	GND	GND
	3	KEYS	Key jack sensing signal
	4	NC	
	5	KEY	Key down signal
J7	1	GND	GND
COM	2	NC	
	3	TXD	RX data from personal computer
	4	RXD	TX data from TS-870S
	5	NC	
	6	NC	
	7	CTS	TX inhibit signal from TS-870S
	8	RTS	TX inhibit signal from personal computer
	9	NC	
LCD ASSY (B38-0736-05)			
CN1	1	GND	GND
	2	DIM	LCD dimmer control signal
	3	BLANK	LCD goes off control signal
	4	UCK1	LCD driver control serial clock
	5	UDA1	LCD driver control serial data
	6	ENL3	LCD driver control enable signal
	7	ENL2	LCD driver control enable signal
	8	14D	Digital 13.8V
	9	14D	Digital 13.8V
	10	5D	Digital 5V

TS-870S PC BOARD VIEWS

LCD ASSY (B38-0736-05)
Component side view

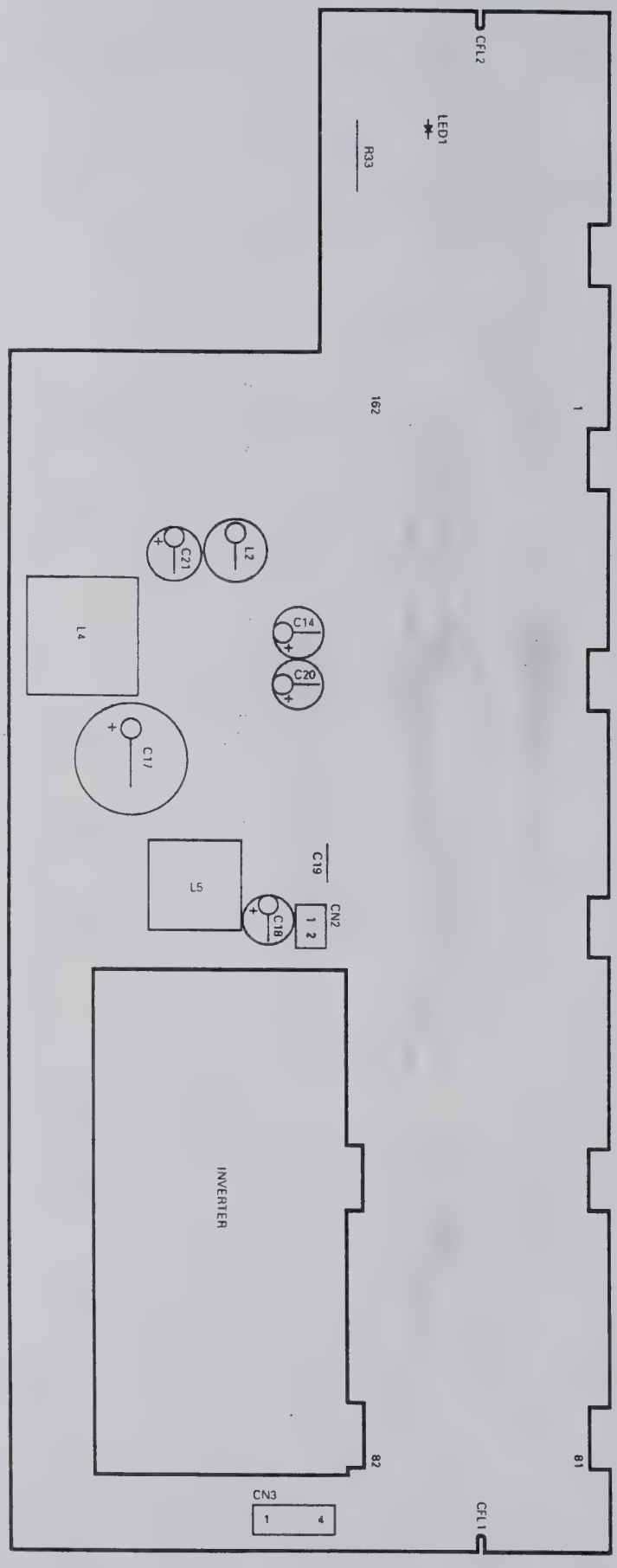

LCD ASSY (B38-0736-05)
Foil side view

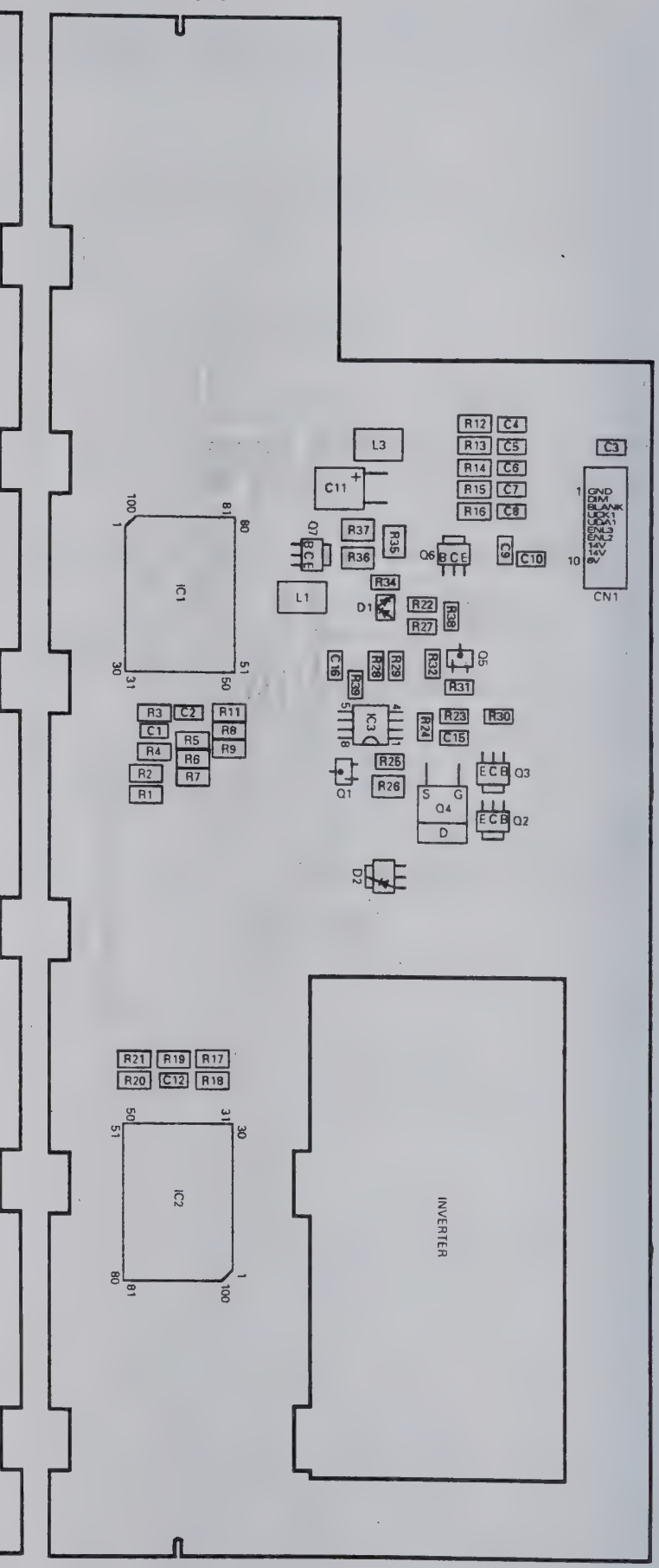

RF UNIT (X44-3210-00) (C/9)
Component side view

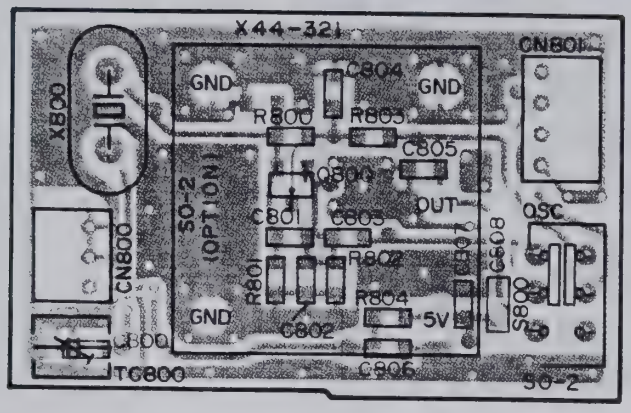

RF UNIT (X44-3210-00) (C/9)
Foil side view

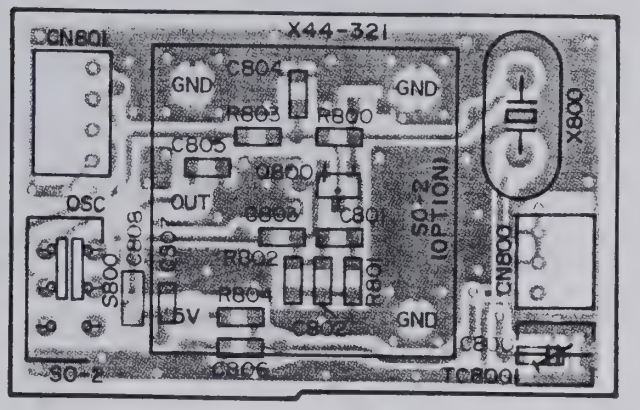

Component side
Foil side

VCO2 (X58-3390-03)
Component side view

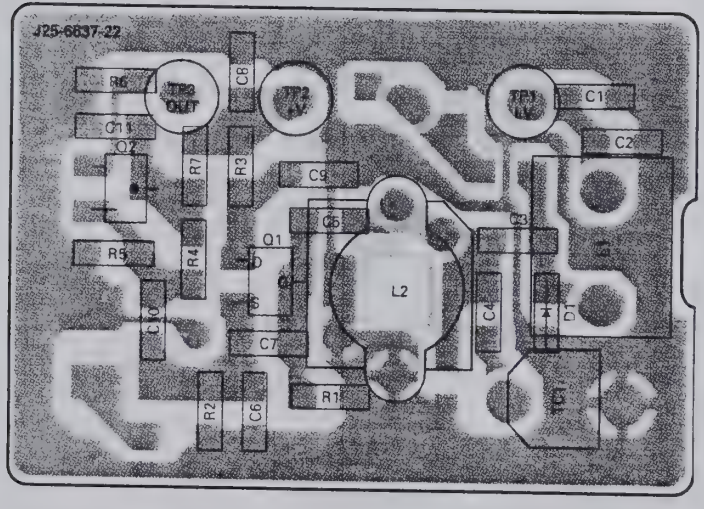

VCO2 (X58-3390-03)
Foil side view

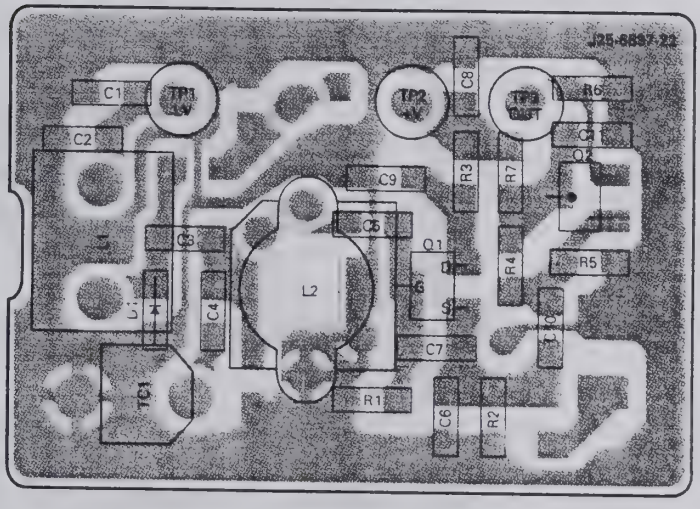

FINAL UNIT (X45-351X-XX) (A/5) : FINAL

Component side view

0-00 : K,P,M,M2,X
2-71 : E,E2,E3,E9

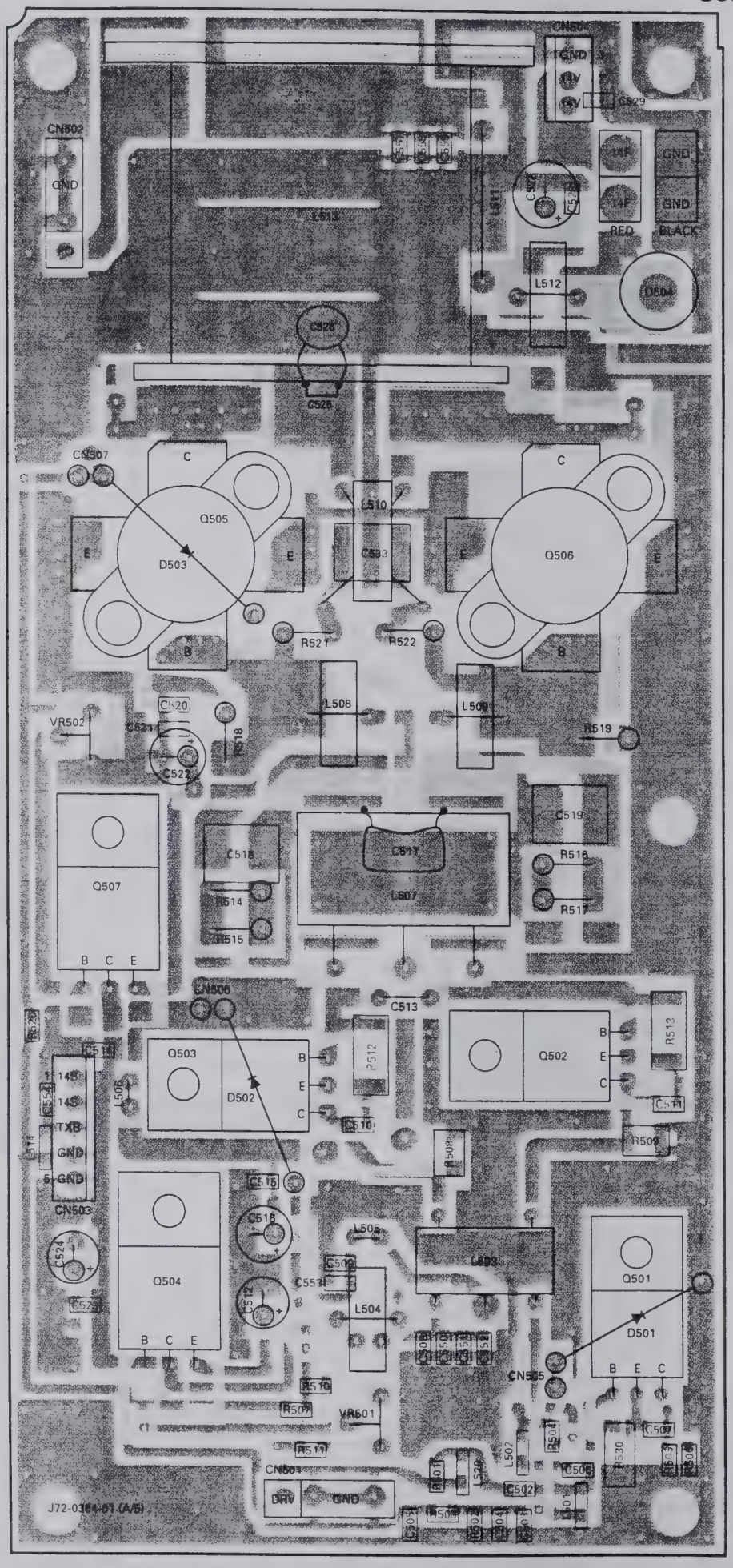

Component side
Foil side

FINAL UNIT (X45-351X-XX) (A/5) : FINAL
Foil side view
0-00 : K,P,M,M2,X
2-71 : E,E2,E3,E9

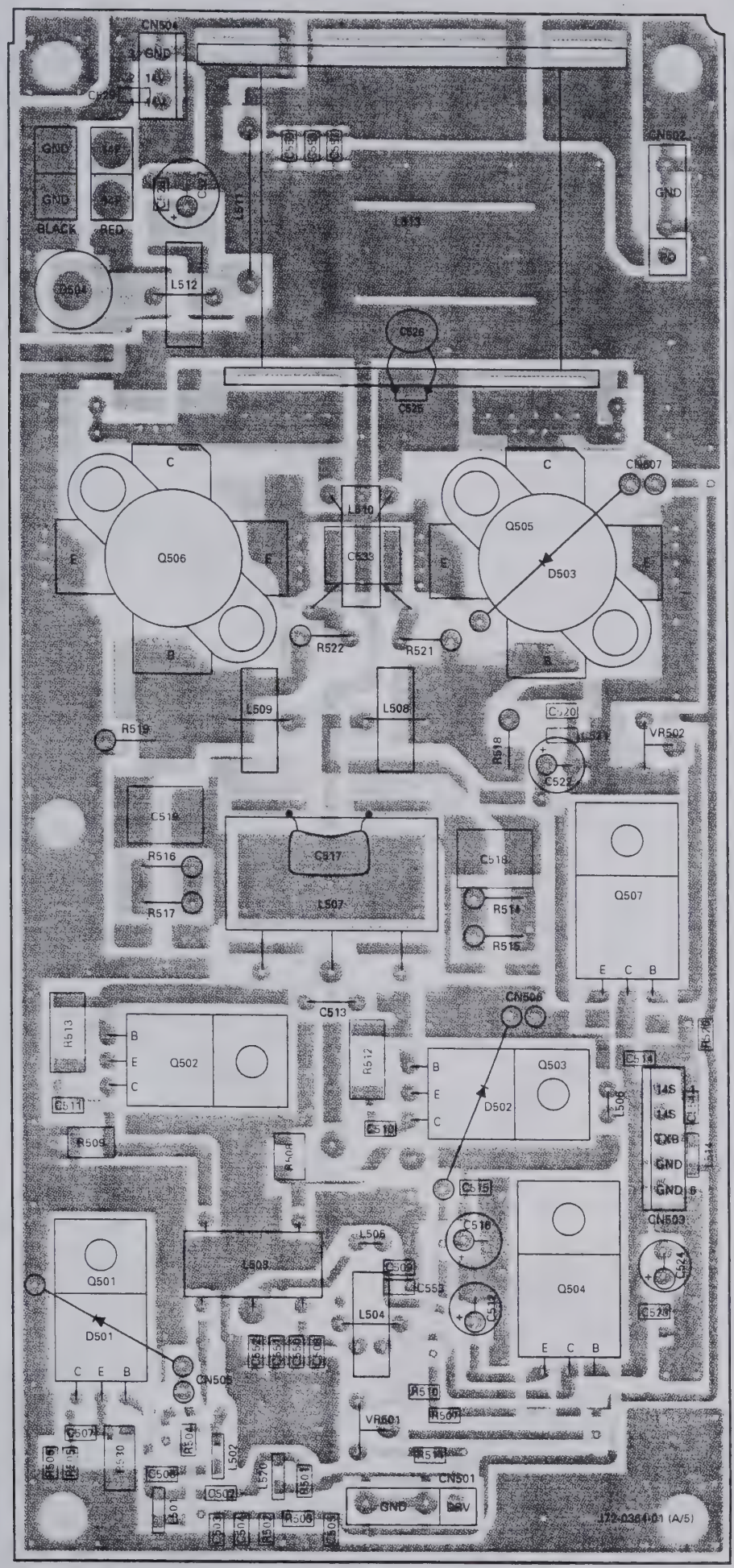

Component side
Foil side

TS-870S PC BOARD VIEW

FINAL UNIT (X45-351X-XX) (B/5) : FILTER

Component side

Foil side

Component side view 0-00 : K,P,M,M2,X 2-71 : E,E2,E3,E9

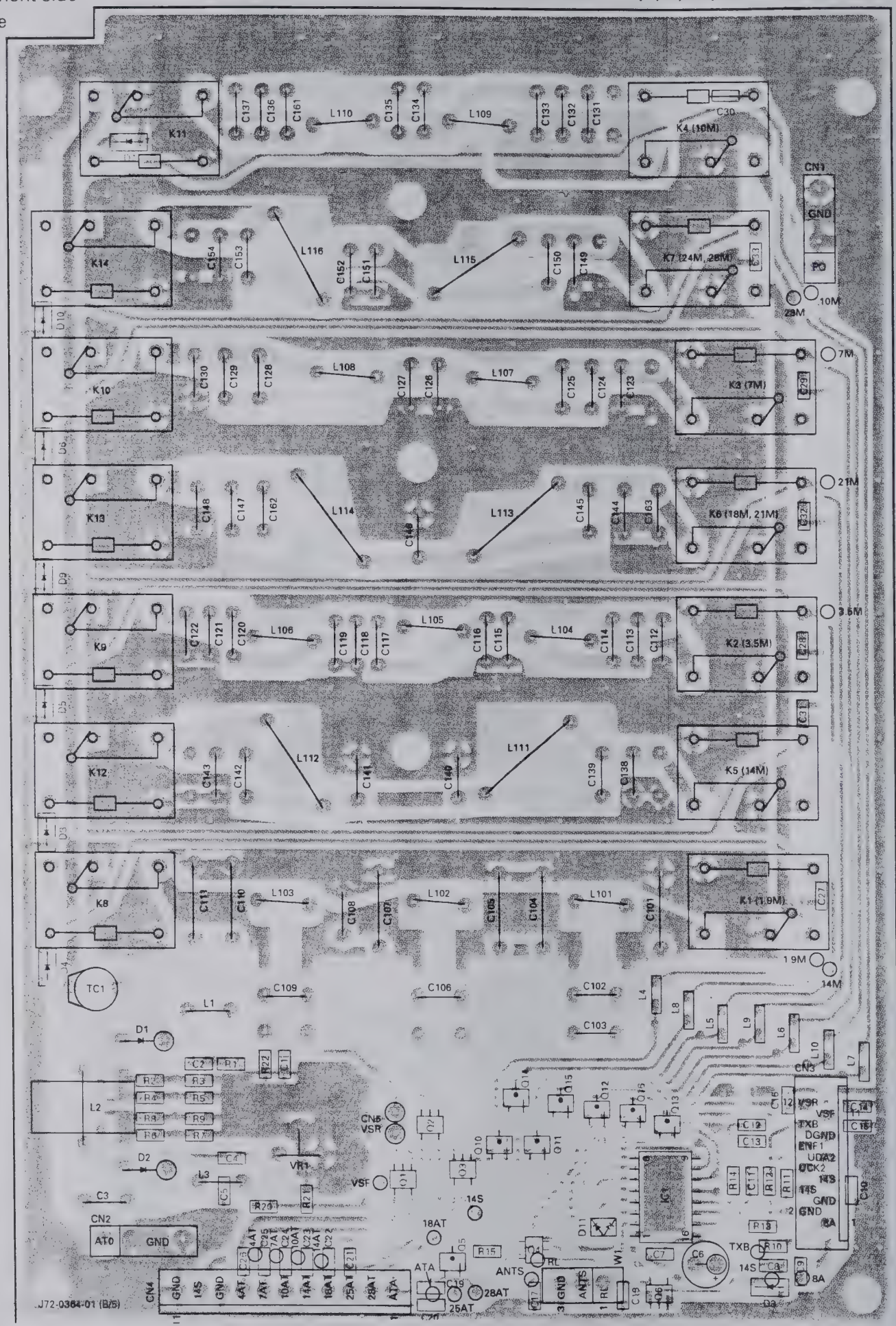

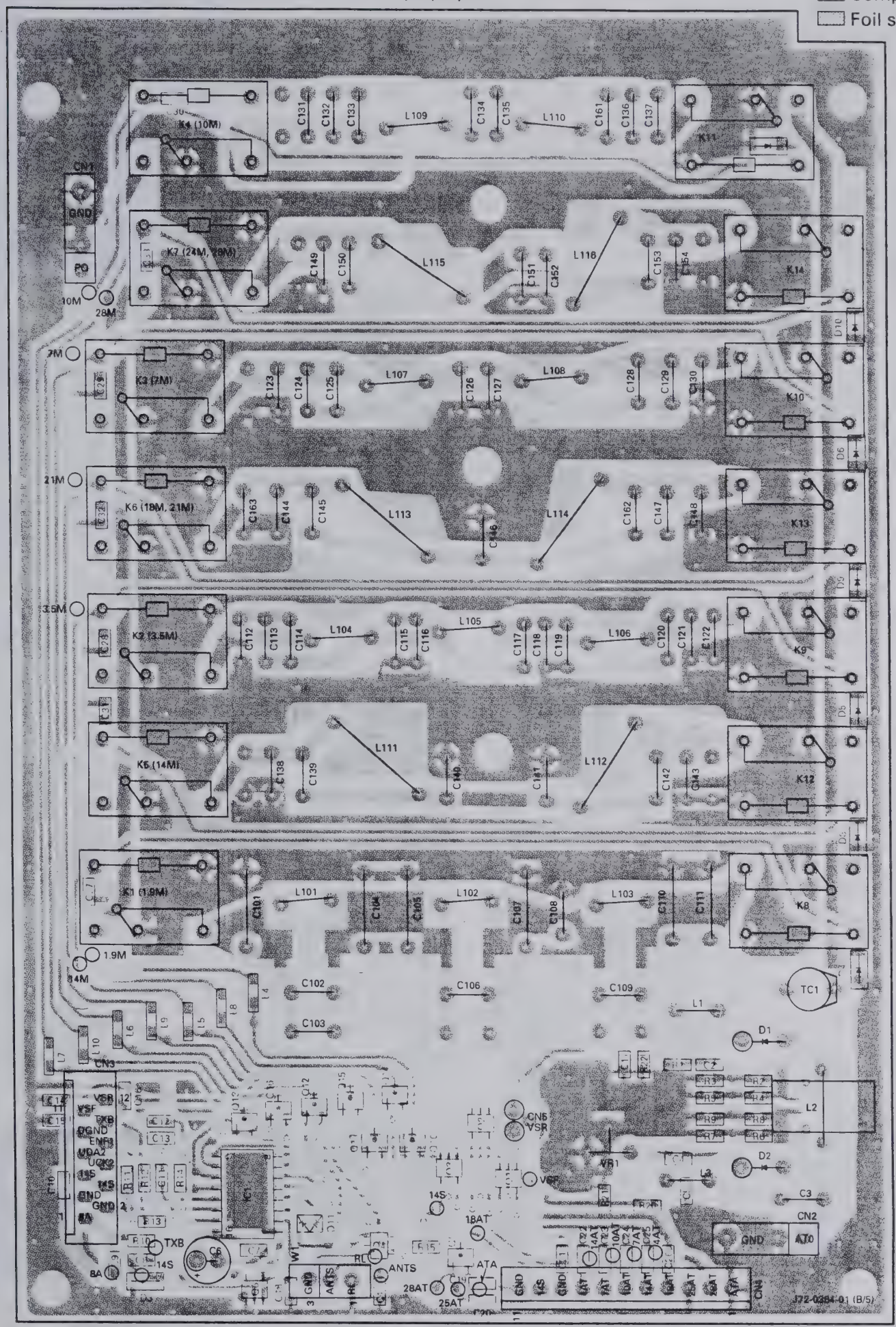
K4 (10M)
K7 (24M, 28M)
K3 (7M)
K6 (18M, 21M)
K2 (3.5M)
K5 (14M)
K1 (1.9M)
K11
K14
K10
K13
K9
K12
K8
CN1
GND
P0
10M
28M
7M
21M
3.5M
1.9M
24M
L101
L102
L103
L104
L105
L106
L107
L108
L109
L110
L111
L112
L113
L114
L115
L116
C101
C102
C103
C104
C105
C106
C107
C108
C109
C110
C111
C112
C113
C114
C115
C116
C117
C118
C119
C120
C121
C122
C123
C124
C125
C126
C127
C128
C129
C130
C131
C132
C133
C134
C135
C136
C137
C138
C139
C140
C141
C142
C143
C144
C145
C146
C147
C148
C149
C150
C151
C152
C153
C154
C161
C162
C163
TC1
D1
D2
L1
L2
L3
CN2
CN3
CN5
VR1
VSP
VSB
VSF
TXB
ANTS
ATA
14S
18AT
28AT
25AT
J72-0354-01 (B/5)

TS-870S PC BOARD VIEWS

FINAL UNIT
(X45-351X-XX) (D/5) : AVR
Component side view
0-00 : K,P,M,M2,X
2-71 : E,E2,E3,E9

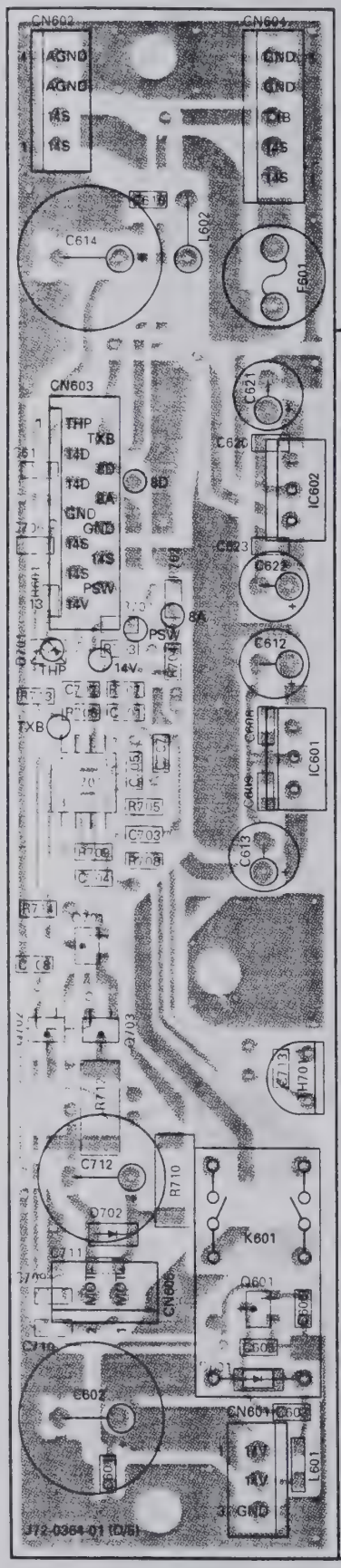

FINAL UNIT
(X45-351X-XX) (E/5)
: RELAY
Component side view
0-00 : K,P,M,M2,X
2-71 : E,E2,E3,E9

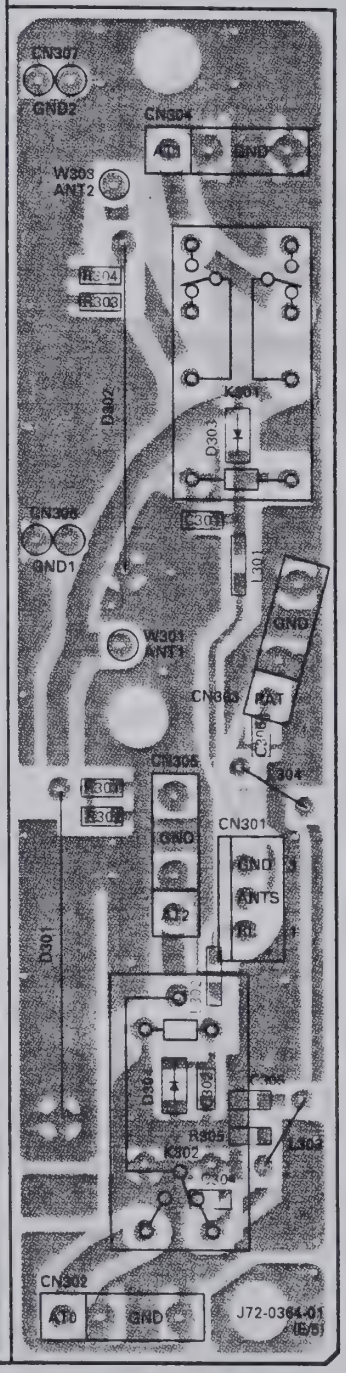

FINAL UNIT
(X45-351X-XX) (E/5)
: RELAY
Foil side view
0-00 : K,P,M,M2,X
2-71 : E,E2,E3,E9

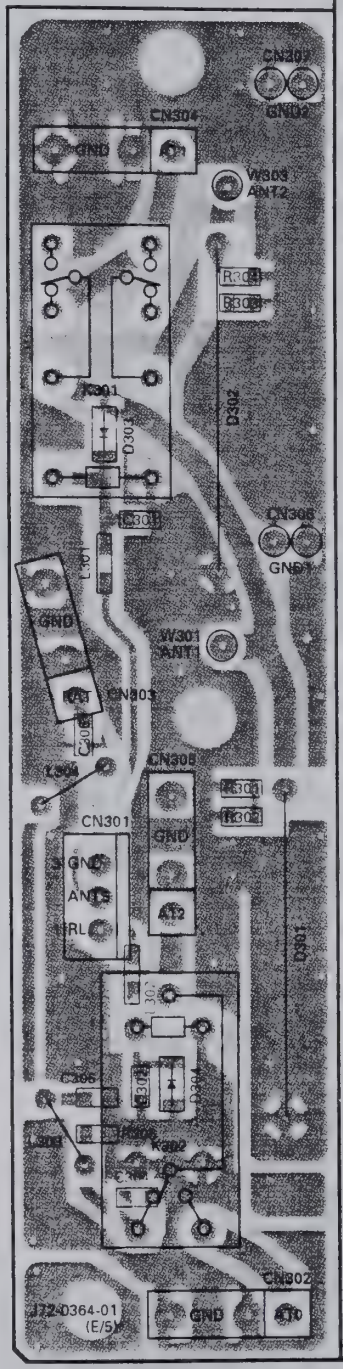

FINAL UNIT
(X45-351X-XX) (D/5) : AVR
Foil side view
0-00 : K,P,M,M2,X
2-71 : E,E2,E3,E9

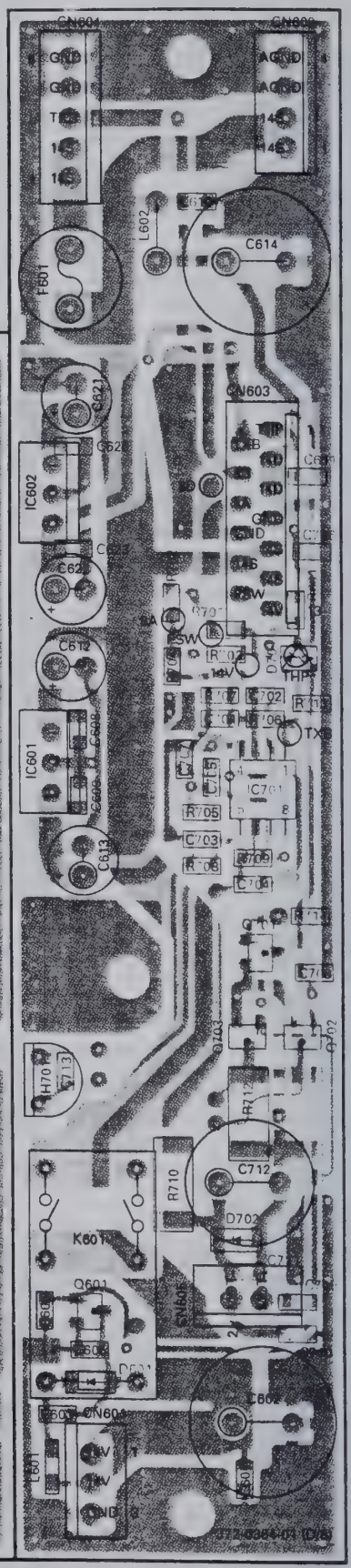

Component side
Foil side

TS-870S PC BOARD VIEWS

CONTROL UNIT (X53-356X-XX) (D/4) : MIC
Component side view
0-11 : K,P 0-21 : M 0-22 : M2 0-71 : X
2-71 : E 2-72 : E2 2-73 : E3 2-74 : E9

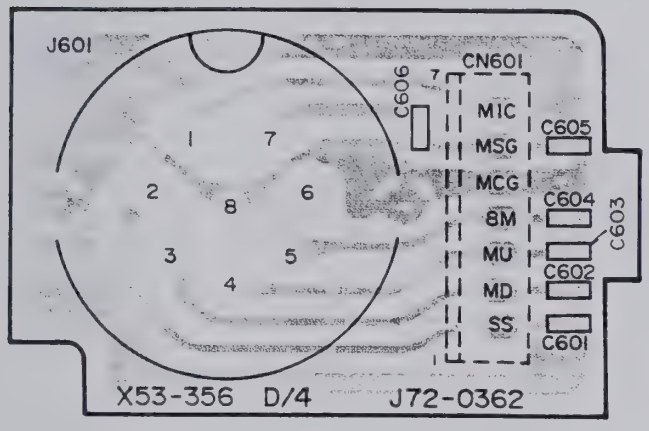

CONTROL UNIT (X53-356X-XX) (D/4) : MIC
Foil side view
0-11 : K,P 0-21 : M 0-22 : M2 0-71 : X
2-71 : E 2-72 : E2 2-73 : E3 2-74 : E9

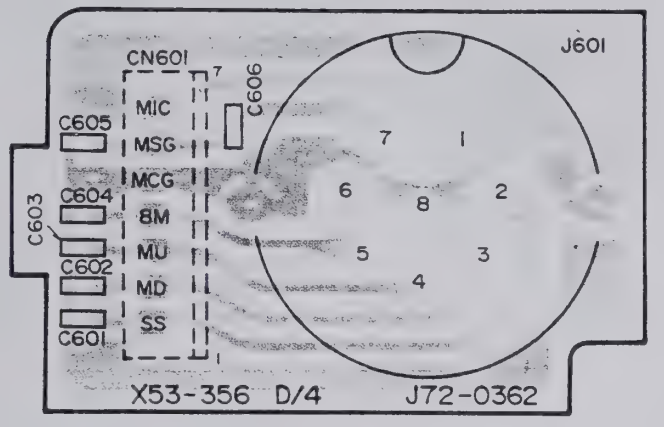

Component side
Foil side

PC BOARD VIEW TS-870S

FINAL UNIT (X45-351X-XX) (C/5)
: CONNECTION Foil side view

0-00 : K,P,M,M2,X
2-71 : E,E2,E3,E9

2SA1162
2SC2712

2SD1406

2SD1624

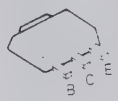

3SK131

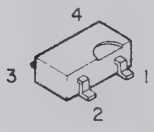

UPC7805H

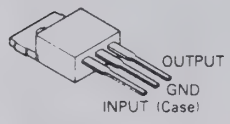

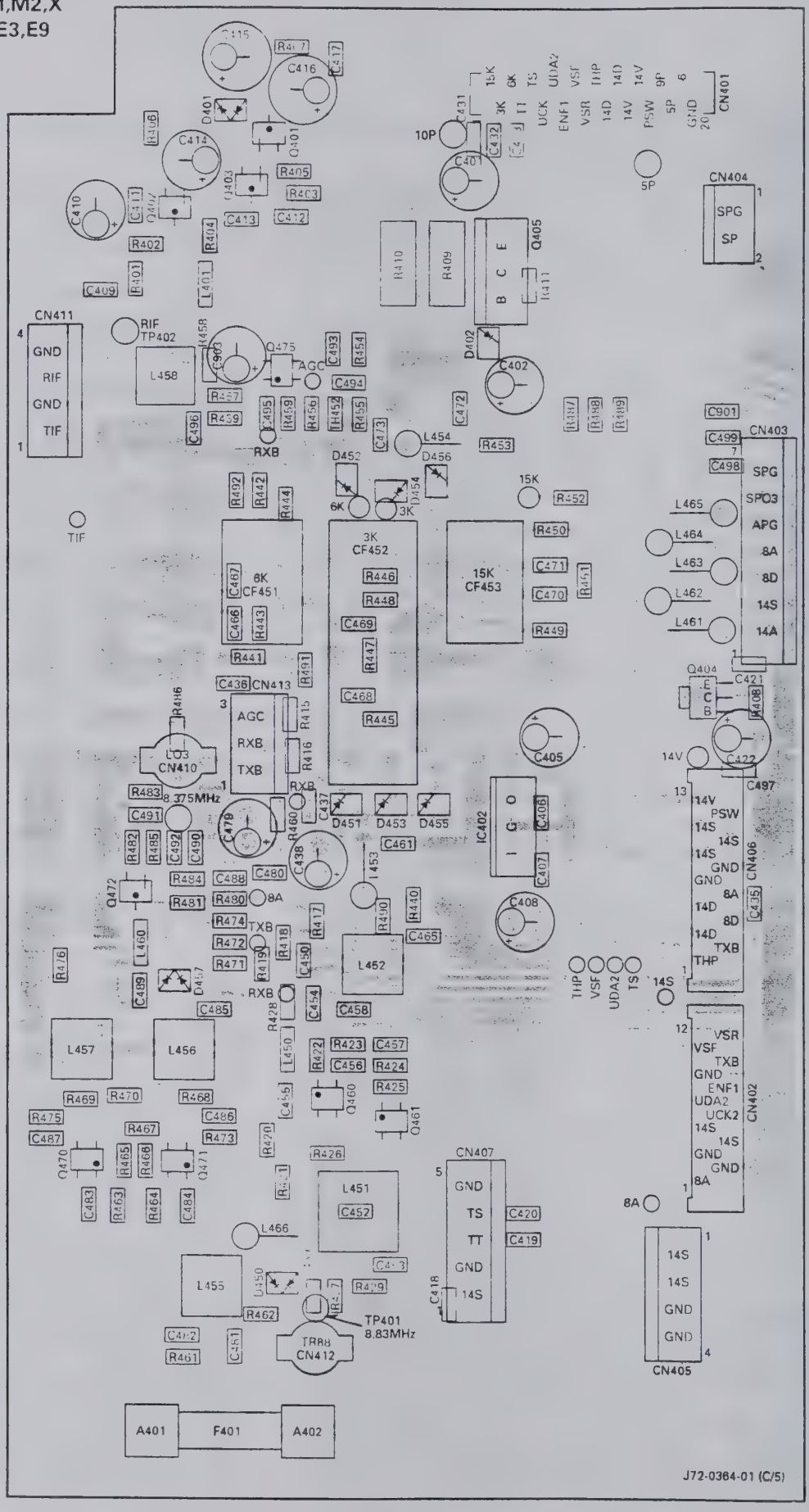

Component side
Foil side

DRU-3 (DIGITAL RECORDING UNIT)

DRU-3 Circuit Diagram

X43-3090-20

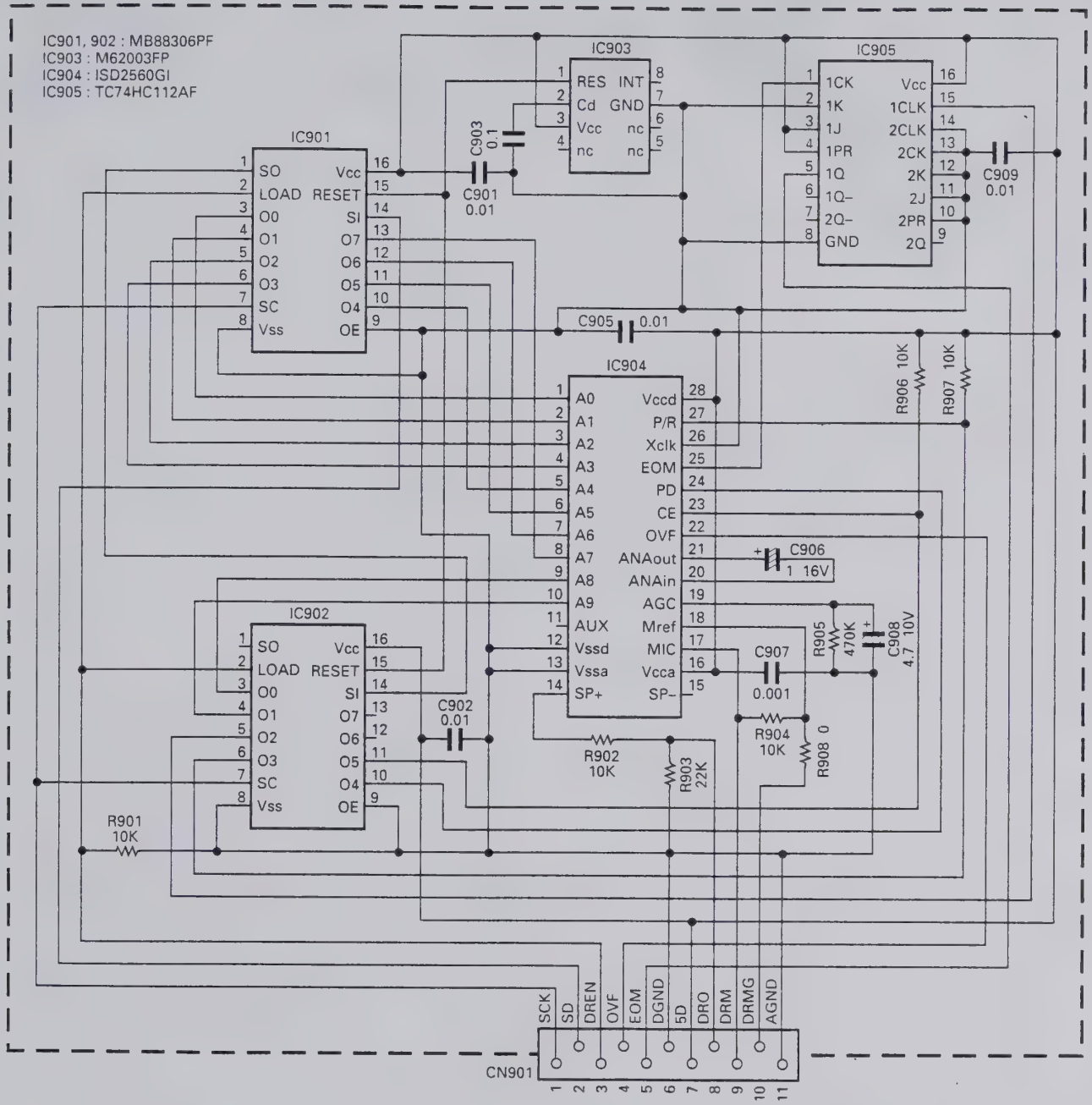

PG-2Z (DC CABLE)

PG-2Z External View

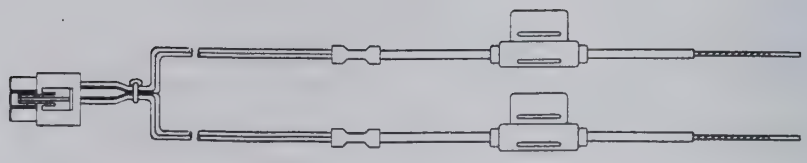

PG-2Z Parts List

Parts No.	New parts	Description
E30-3157-15		DC cable assy
F05-2531-05		Fuse (25A/32V)

SPECIFICATIONS

	Item			Rating
GENERAL	Mode			J3E (LSB, USB), A1A (CW), A3F (AM), F3E (FM), F1D (FSK)
	Number of memory channels			100
	Antenna impedance			50Ω (With Antenna Tuner 20 to 150Ω)
	Supply voltage			DC 13.8V ± 15%
	Grounding method			Negative ground
	Current	Transmit (Max.)		20.5A
		Receive (No signal)		2A
	Usable temperature range			–10°C to +50°C (+14°F to +122°F)
	Frequency stability (–10°C to +50°C)			Within ±10PPM
	Frequency accuracy (At room temperature)			Within ±10PPM
	Dimensions [W x H x D] (Projections included)			330 x 120 x 334 mm/13.0 x 4.72 x 13.1 in (339 x 135 x 375 mm/13.3 x 5.31 x 14.8 in)
	Weight			Approx. 11.5kg (25lbs)
TRANSMITTER	Frequency range	160m band		1.8*1 to 2.0*2MHz
		80m band		3.5 to 4.0*3MHz
		40m band		7.0 to 7.3*4MHz
		30m band		10.1 to 10.15MHz
		20m band		14.0 to 14.35MHz
		17m band		18.068 to 18.168MHz
		15m band		21.0 to 21.45MHz
		12m band		24.89 to 24.99MHz
		10m band		28.0 to 29.7MHz
	Output power*5	SSB, CW, FSK, FM	Max.	100W
			Min.	20W or less
		AM	Max.	25W
			Min.	20W or less
	Modulation	SSB		Balanced
		FM		Reactance
		AM		Low level
	Spurious emissions			–60dB or less
	Carrier suppression			50dB or more
	Unwanted sideband suppression (Modulation frequency 1.0kHz)			50dB or more
	Maximum frequency deviation (FM)	Wide		±5kHz or less
		Narrow		±2.5kHz or less
	Transmit frequency characteristics (–6dB) (TX lower cutoff : 300Hz, TX bandwidth : 2.3kHz)			300 to 2600Hz
	XIT shift frequency range			±9.99kHz
	Microphone imppedance			600Ω

*1 1.81MHz : Europe, France, Holland; 1.83MHz : Belgium, Spain
*2 1.85MHz : Belgium, France, Holland, Spain
*3 3.8MHz : Europe, Belgium, France, Holland, Spain
*4 7.1MHz : Europe, Belgium, France, Holland, Spain
*5 Belgium, Spain : 10W fixed on 160m band

TS-870S

SPECIFICATIONS

	Item			Rating
RECEIVER	Circuit type			Quadruple conversion superheterodyne
	Frequency range			100kHz to 30MHz
	Intermediate frequency			1st : 73.05MHz, 2nd : 8.83MHz, 3rd : 455kHz, 4th : 11.3kHz
	Sensitivity	SSB, CW, FSK (At 10dB (S+N)/N)	100kHz to 500kHz	1μV or less
			500kHz to 1.62MHz*6	4μV or less
			1.62MHz*6 to 24.5MHz	0.2μV or less
			24.5MHz to 30MHz	0.13μV or less
		AM (At 10dB (S+N)/N)	100kHz to 500kHz	2μV or less
			500kHz to 1.62MHz*6	31.6μV or less
			1.62MHz*6 to 24.5MHz	2μV or less
			24.5MHz to 30MHz	2μV or less
		FM (At 12dB SINAD)	28MHz to 30MHz	0.25μV or less
	Selectivity	SSB Lo : 300Hz, Hi : 2600Hz		–6dB : 2.3kHz, –60dB : 3.3kHz
		CW Width : 200Hz		–6dB : 200Hz, –60dB : 450Hz
		FSK Width : 500Hz		–6dB : 500Hz, –60dB : 1000Hz
		AM Lo : 100Hz, Hi : 4000Hz		–6dB : 9kHz, –60dB : 12kHz
		FM Width : 14kHz		–6dB : 14kHz, –60dB : 18kHz
	Image rejection (1.8MHz to 30MHz)			80dB or more
	1st IF rejection (1.8MHz to 30MHz)			80dB or more
	Notch filter atteneuation			40dB or more
	RIT shift frequency range			±9.99kHz
	Squelch sensitivity	SSB, CW, FSK, AM	100kHz to 500kHz	2μV or less
			500kHz to 1.62MHz*6	20μV or less
			1.62MHz*6 to 30MHz	2μV or less
		FM	28MHz to 30MHz	0.25μV or less
	Audio output (8Ω, 10% distortion)			1.5W or more
	Audio output impedance			8Ω

*6 1.705MHz : Canada, U.S.A.

Specifications are subject to change without notice or obligation due to ongoing technological developments.

KENWOOD CORPORATION
14-6, Dogenzaka 1-chome, Shibuya-ku, Tokyo 150, Japan

KENWOOD SERVICE CORPORATION
P.O. BOX 22745, 2201 East Dominguez Street, Long Beach, CA 90801-5745, U.S.A.

KENWOOD ELECTRONICS LATIN AMERICA S.A.
P.O. BOX 55-2791 Piso 6 Plaza Chase Cl. 47 y Aquilino de la Guardio Panama, Republic of Panama

KENWOOD ELECTRONICS CANADA INC.
6070 Kestrel Road, Mississauga, Ontario, Canada L5T 1S8

KENWOOD ELECTRONICS DEUTSCHLAND GMBH
Rembrücker Str. 15, 63150 Heusenstamm, Germany

KENWOOD ELECTRONICS BENELUX N.V.
Mechelsesteenweg 418 B-1930 Zaventem, Belgium

TRIO-KENWOOD FRANCE S.A.
13, Boulevard Ney, 75018 Paris, France

TRIO-KENWOOD U.K. LIMITED
KENWOOD House, Dwight Road, Watford, Herts., WD1 8EB United Kingdom

KENWOOD ELECTRONICS NEDERLAND B.V.
Amsterdamseweg 35, 1422 AC Uithoorn, The Netherlands

KENWOOD ELECTRONICS ITALIA S.p.A.
Via G. Sirtori, 7/9 20129 Milano, Italy

KENWOOD IBERICA S.A.
Bolivia, 239-08020 Barcelona, Spain

KENWOOD ELECTRONICS AUSTRALIA PTY. LTD.
(A.C.N. 001 499 074)
P.O. Box 504, 8 Figtree Drive, Australia Centre, Homebush, N.S.W. 2140, Australia

KENWOOD & LEE ELECTRONICS, LTD.
Unit 3712-3724, Level 37, Tower one Metroplaza, 223 Hing Fong Road, Kwai Fong, N.T., Hong Kong

HF TRANSCEIVER

TS-870S

SERVICE MANUAL

KENWOOD

© 1995-8 PRINTED IN JAPAN
B51-8296-00(N)1360

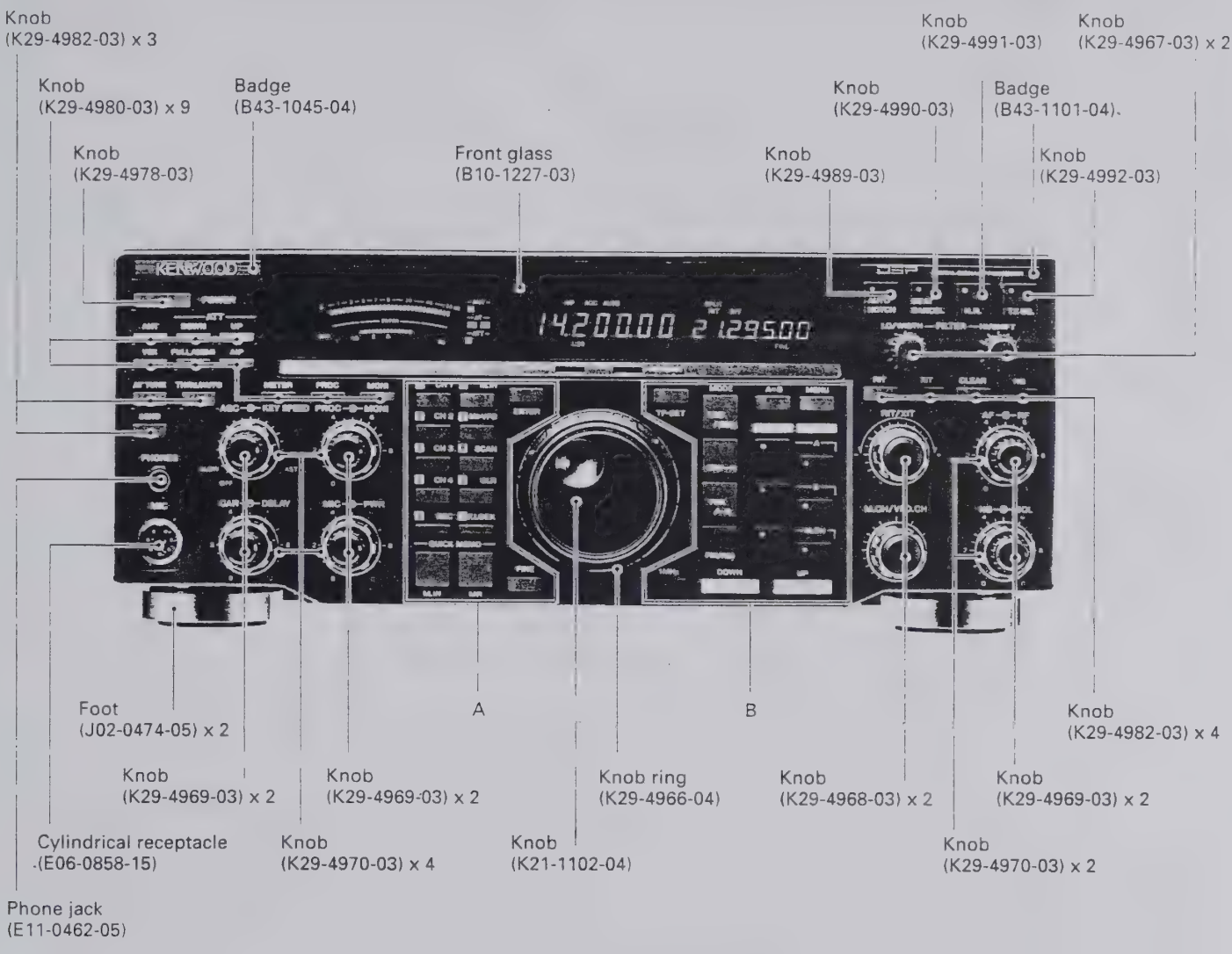

A

Knob (K29-4982-03)	Knob (K29-4982-03)	Knob (K29-4982-03)
Knob (K29-4982-03)	Knob (K29-4982-03)	
Knob (K29-4982-03)	Knob (K29-4982-03)	
Knob (K29-4982-03)	Knob (K29-4982-03)	
Knob (K29-4980-03)	Knob (K29-4980-03)	
Knob (K29-4984-03)	Knob (K29-4984-03)	Knob (K29-4982-03)

B

Knob (K29-4982-03)	Knob (K29-4985-03)	Knob (K29-4982-03)	Knob (K29-4982-03)
	Knob (K29-4986-03)	Knob (K29-4983-03)	Knob (K29-4981-03)
	Knob (29-4987-03)	Knob (K29-4983-03)	Knob (K29-4981-03)
	Knob (K29-4988-03)	Knob (K29-4983-03)	Knob (K29-4981-03)
Knob (K29-4982-03)	Knob (K29-4979-03)		Knob (K29-4979-03)

CONTENTS

CIRCUIT DESCRIPTION 3
DESCRIPTION OF COMPONENTS 45
SEMICONDUCTOR DATA 53
PARTS LIST 58
EXPLODED VIEW 81
PACKING 88
ADJUSTMENT 89
TERMINAL FUNCTION 104
CIRCUIT DIAGRAMS / PC BOARD VIEWS
- LCD ASSY (B38-0736-05) 110
- RF UNIT (X44-3210-00) (A/9) : RF 113
- RF UNIT (X44-3210-00) (B/9) : PLL 117
- RF UNIT (X44-3210-00) (C/9) 127
- VCO2 (X58-3390-03) 127
- FINAL UNIT (X45-351X-XX) (A/5) : FINAL 128
- FINAL UNIT (X45-351X-XX) (B/5) : FILTER 130
- FINAL UNIT (X45-351X-XX) (D/5) : AVR 132
- FINAL UNIT (X45-351X-XX) (E/5) : RELAY 132
- AT UNIT (X53-3340-02) (A/2) 137
- AT UNIT (X53-3340-02) (B/2) 139
- CONTROL UNIT (X53-356X-XX) (A/4) : CONTROL 143
- CONTROL UNIT (X53-356X-XX) (B/4) : SW 147
- TX-RX UNIT (X57-4620-00) 155
- RF UNIT (X44-3210-00) (D/9) 169
- RF UNIT (X44-3210-00) (E/9) 169
- RF UNIT (X44-3210-00) (F/9) 170
- RF UNIT (X44-3210-00) (G/9) 170
- RF UNIT (X44-3210-00) (H/9) 171
- RF UNIT (X44-3210-00) (I/9) 171
- FINAL UNIT (X45-351X-XX) (C/5) : CONNECTION 172
- CONTROL UNIT (X53-356X-XX) (D/4) : MIC 174

SCHEMATIC DIAGRAM 175
BLOCK DIAGRAM 179
LEVEL DIAGRAM 183
DRU-3 (DIGITAL RECORDING UNIT) 185
PG-2Z (DC CABLE) 188
SPECIFICATIONS 189

CIRCUIT DESCRIPTION

Frequency Configuration

The TS-870S is quadruple conversion in receive mode. As a transmitter, it is quadruple conversion in non-FM modes and double conversion in FM mode.

The fourth 11.3kHz IF signal is converted from analog to digital, connected to the DSP in receive mode, and decoded. In transmit mode, the microphone input signal is converted from analog to digital and applied to the DSP. It is converted from digital to analog, passed through a mixer, and becomes the 455kHz TIF signal In FM mode, however, only 455kHz carriers are output from the DSP.

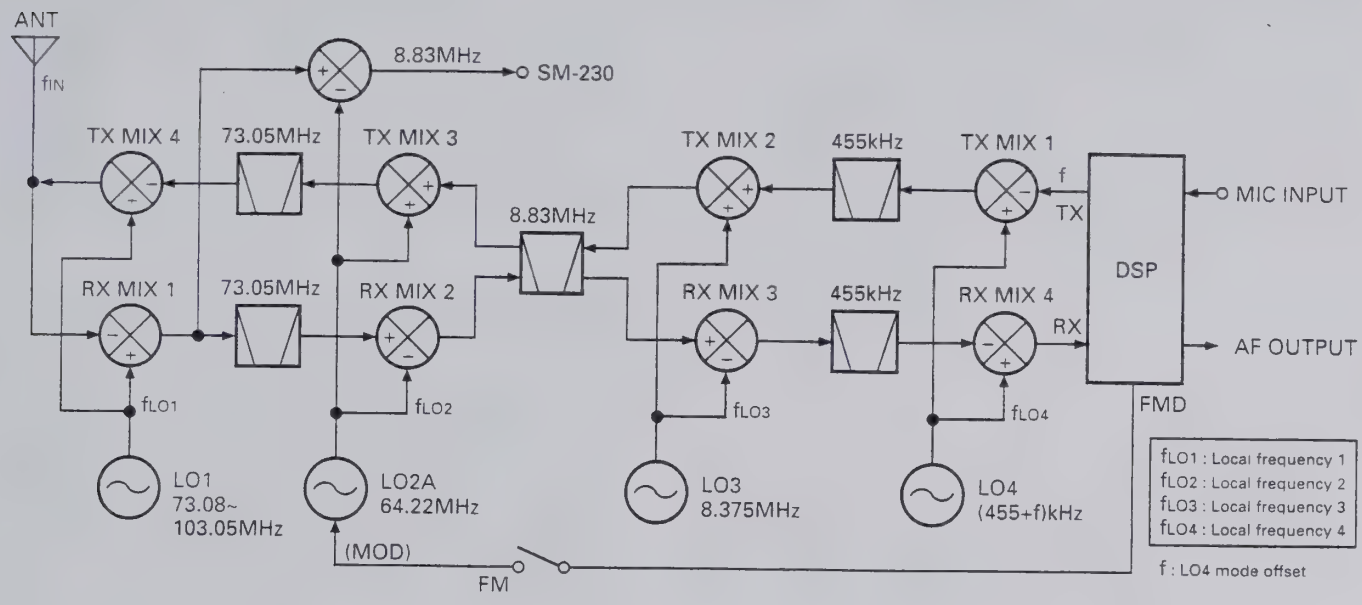

Fig. 1 Frequency configutation

■ Frequency configuration

When the receiver frequency by fIN from the antenna in SSB mode is zero beat (namely, at zero to the SSB signal with a carrier point of fIN), the relationship between these signals is expressed by the following equation.

$$f_{IN} = f_{LO1} - f_{LO2} - f_{LO3} - f_{LO4} + f \quad \ldots . (1)$$

Since all these frequencies are generated by the PLL or DDS circuits as shown in the PLL block diagram in Figure 2, the receiver frequency is determined only by the reference frequency fSTD, the PLL dividing ratio and DDS data. Therefore, the reference frequency accuracy equals the operating frequency accuracy.

The accuracy of the reference oscillator used in the TS-870S is 10ppm (–10 to +50°C). If the temperature-compensated crystal oscillator (TCXO) SO-2 is used, the accuracy becomes 0.5ppm (–10 to +50°C).

The TS-870S local oscillator and CAR DDS are independent of each other. However, they can be operated like a cancel loop configuration by changing the CAR and local oscillator PLL data simultaneously via a microprocessor. This function allows a shift (fLO1, fLO3, fLO4) by the mode change to be performed and the band width of the slope tune to be varied (fLO1, fLO3, fLO4).

When used as a transmitter in SSB mode or in other modes, likewise the frequency is determined by the reference frequency fSTD and dividing ratio. The display frequencies in the modes are listed in Table 1. In the FSK mode, the TS-870S displays the mark transmitter frequency.

CIRCUIT DESCRIPTION

In CW mode, the TS-870S receiving pitch can be changed to the required frequency in 50Hz steps with the desired signal remaining in the center of the IF filter band-pass (Variable CW pitch system). Since the receiving pitch varies along with the transmitter side tone, it is possible to zero-beat by receiving the desired signal at the same pitch as the side tone.

FM transmission is obtained in this system by modulating the f_{LO2} via application of the audio signal from the microphone to the VCO2.

Mode	Display frequency
USB, LSB	Carrier point frequency
CW	Transmission carrier frequency
FSK	Mark transmitter frequency
AM, FM	IF filter center frequency

Table 1 Display frequency in each mode

PLL Circuit

The TS-870S PLL circuit consists of a PLL loop that includes DDS covering a frequency range between 30kHz to 30MHz in 10Hz or 1Hz steps in accordance with the 20kHz reference frequency; DDS that generates other local oscillators (LO3, LO4); and a PLL loop that produces LO2A.

The dividing ratio data to each PLL loop and the DDS data are controlled by a microprocessor. Each loop is controlled by a single crystal frequency control system according to the reference frequency f_{STD}. (See the PLL block diagram in Figure 2.)

■ Reference signal generation circuit

The reference frequency f_{STD} used for frequency control is determined by the 20MHz crystal oscillator (X800 and Q800 : 2SC2714). One reference frequency is output as the reference signal f_{REF} for the PLL and DDS in the PLL section. The other is sent to the TX-RX unit and used as the PLL reference signal for the PLL and DSP.

The crystal oscillator may be replaced by an optional TCXO (SO-2), and the TCXO may be switched to with slide switch S800.

If the optional TCXO (SO-2) is installed, the S800 switch must be set to the SO-2 position.

■ LO2 (PLL section)

Q1 : 2SK508NV in VCO2 (A501 : X58-3390-03) generates 64.22MHz. The 20MHz reference frequency f_{REF} is applied to pin 15 of IC509 : MB86001PF, and is divided internally by a factor of 1000 (4000 in FM mode) to produce a 20kHz (5kHz in FM mode) comparison frequency.

The VCO2 output is applied to pin 6 of IC509 : MB86001PF, and is internally divided by a factor of 3211 (12844 in FM mode). It is compared with the 20kHz (5kHz in FM mode) signal using the phase comparator. The VCO2 frequency is locked. The division ratio is transmitted from the control unit.

The output from PLL2 is passed through buffer Q539, amplified by amplifier Q532, passed through a low-pass filter, its impedance is converted, and is then output to the RF section as LO2A.

■ LO1 (PLL loop)

Four VCOs and uses Q520 to Q523 : 2SK508NV x 4 to generate 73.08MHz to 103.05MHz. The 20MHz reference frequency f_{REF} is applied to pin 15 of PLL IC IC507 : MB86001PF, and is internally divided by a factor of 20 to produce a 1MHz comparison frequency. The output is passed through amplifier Q524, and a band-pass filter. One output is passed through buffer Q526 : 2SC2996 and a low-pass filter and goes to the RF section.

The other output signal is passed through buffer Q525 : 2SC2714 and applied to pin 5 of mixer IC508 : SN76514. A signal of 54.54 to 55.54MHz is input to pin 11 of IC508 and converted to a signal of 18.0 to 48.0MHz. This signal is output from pin 13. The signal is passed through a high-pass filter, a low-pass filter, and amplifier Q531 : 2SC2714 and Q530 : 2SC2712, and goes to pin 6 of PLL IC IC507 : MB86001PF.

This signal is internally divided by N, and compared with the 1MHz signal using the phase comparator. The mixer output frequency is locked in 1MHz steps. The division ratio N is transmitted from the control unit as data (N : 18 to 48) corresponding to 0MHz to 30MHz in 1MHz steps. One of the four VCOs is selected according to the VCO change signal (VB0 to VB3) sent from the control unit.

CIRCUIT DESCRIPTION

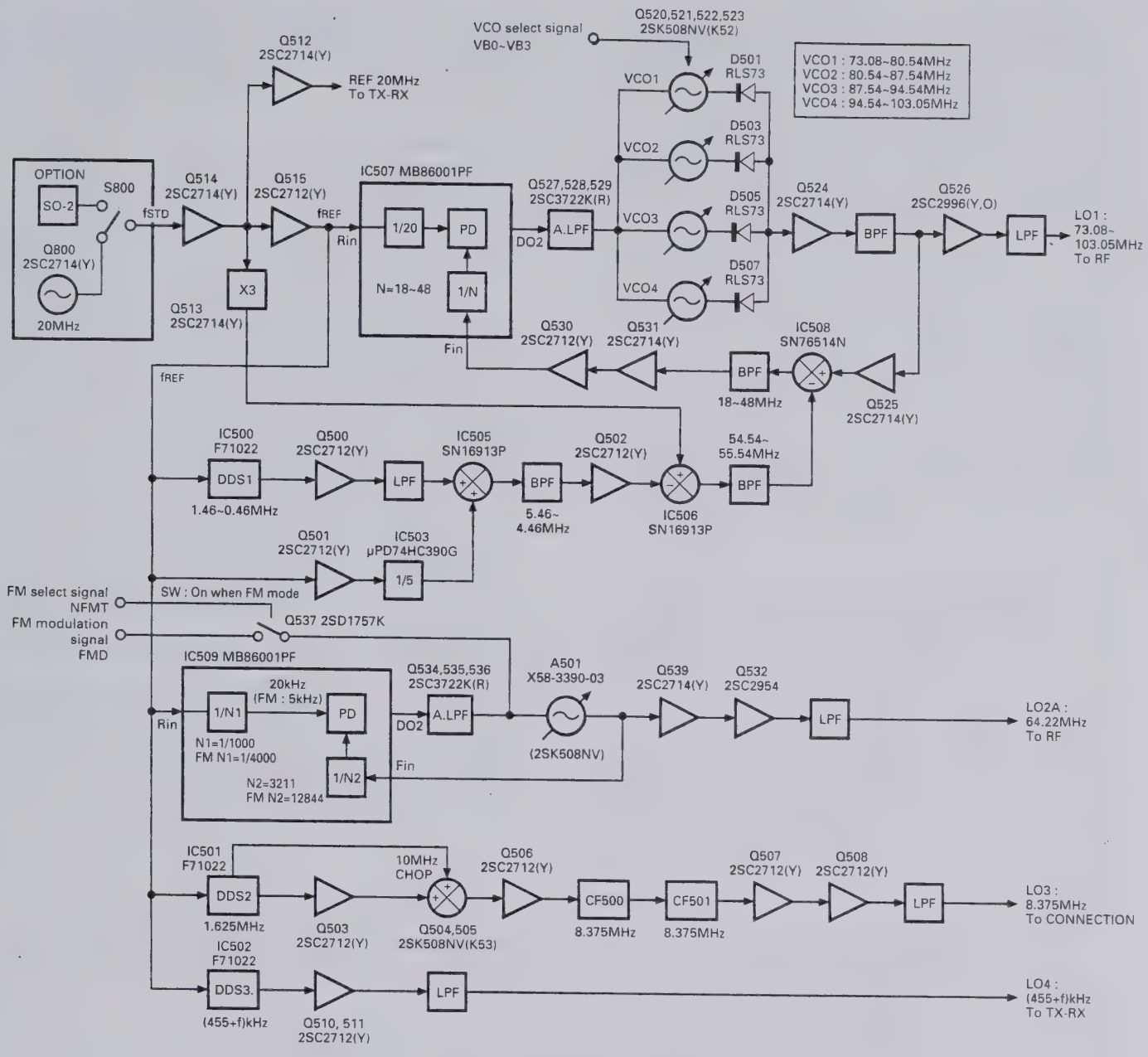

Fig. 2 PLL block diagram

CIRCUIT DESCRIPTION

DDS1 (IC500 : F71022) generates 1.46 to 0.46MHz digital signals. They are converted to analog signals by a digital to analog converter (consisting of CP500, CP501, and Q500), passed through a low-pass filter, and fed to pin 5 of mixer IC505 : SN16913P. The 4MHz signal produced by division of 20MHz reference frequency fREF by divider IC503 : UPD74HC390G by a factor of 5 is input to pin 2 of the mixer IC505, and a 5.46 to 4.46MHz signal is output from pin 1. The output signal is passed through a band-pass filter and buffer Q502, and input to pin 5 of mixer IC506 : SN16913P. The 60MHz signal obtained by tripling 20MHz reference frequency fREF via multiplying circuit Q515 is mixed, and a 54.54 to 55.54MHz signal is output. This signal is passed through a band-pass filter, and goes to pin 13 of mixer IC508.

DDS1 sweeps the 1.46 to 0.46MHz digital signal output in 10 or 1Hz steps, and LO1 covers the 73.08 to 103.05MHz signal in 10 or 1Hz steps and is output to the RF section.

■ LO3 generation

DDS2 (IC501 : F71022) generates a digital signal of the 1.625MHz basic frequency. It is converted to an analog signal by a digital-to-analog converter (consisting of CP502, CP503, and Q503), and chopped by a circuit consisting of Q503 to Q505 so as to extract an 8.375MHz primary harmonic component. Unwanted components are removed by a ceramic filter consisting of CF500 and CF501. The resulting signal is passed through amplifier Q507, buffer Q508, and a low-pass filter, and output to the connection section (final unit) as the LO3 signal.

■ LO4 generation

DDS3 (IC502 : F71022) generates a (455+f) kHz digital signal. It is converted to an analog signal by a digital to analog converter (consisting of CP504, CP505, and Q510), passed through buffer Q511 and a low-pass filter, and output to the TX-RX unit as the LO4 signal.

The LO4 signal is a local oscillator signal used to generate a DSP processing signal f from 455kHz. The f frequency is described in the local signal section (page 14).

■ Subtone generation

During FM transmission, the DSP generates a signal to which a subtone is added and is then sent to the main unit as it is.

■ PLL data

The TS-870S has three PLLs to which the main CPU sends PLL data based on the displayed frequency.

- PLL comprising a VFO (PLL section)
- Local oscillator PLL for frequency conversion (PLL section)
- PLL that generates timing clocks for digital signal processing (TX-RX unit)

The VCOs change with the following conditions.

- Main encoder change → VCO1 (PLL section)
- Mode change → VCO2 (PLL section)

Each PLL IC outputs an unlock signal. If any PLL is unlocked, the main display indicates ". . . . . " (dots). If the unlocked PLL is the TX-RX unit, the sub-display shows "Err-FD", and if it is the PLL unit, it shows "Err-FE" to indicate that it is unlocked.

The unlocking of each PLL is output to pin 11 (UL) of PLL IC : MB86001PF as unlock data (UNLOCK : LOW).

Loop	VCO No.	IC No.	Comparison frequency/divide ratio	Variable divide ratio	Frequency (MHz)
LO1	VCO1	IC507	1MHz/20	18~48	73.08~103.05
LO2	VCO2	IC509	20kHz/1000 5kHz/4000 : FM	3211 12844 : FM	64.22

CIRCUIT DESCRIPTION

■ DDS circuit configuration

The DDS IC has been developed with standard cells to implement a high-speed operation circuit and large-capacity ROM at a low cost.

1) IC configuration

The IC consists of the following components:

Two 28 bit registers for setting frequency data, one 28 bit frequency shift register for addition to the frequency register, a 23 bit parallel signal input section for frequency modulation with a parallel signal, and a data entry and selection section.

Frequency modulation section comprised of a 28 bit adder that adds frequency data and frequency modulation data

Phase data operation section that adds data from the frequency modulation section with the 28 bit phase data register

SIN-ROM that converts phase data to sine data.

2) Frequency/shift data setting

Using serial signals synchronized with clock pulses, a total of 30 bits (2 bits that specify the destination to which data are set and 28 bits for frequency data) are set in three internal registers.

3) Frequency register selection

The data set in the two frequency registers are selected by the SLAB input of the DDS IC. This pin handles the TXC signal. This function eliminates the need for the TS-870S microprocessor to set frequency data for each transmission and reception.

4) Frequency data selection

The SPSL input of the DDS IC selects whether to use the data in the internal frequency shift register or the data from parallel input as frequency modulation data.

5) Frequency modulation

The MDEN input of the DDS IC enables or disables frequency modulation. When frequency modulation is enabled, frequency data is added, and the result is input to the phase data operation section.

6) Phase data operation

The target frequency phase data is output by accumulating 28 bit frequency data in the 28 bit phase accumulator.

$Fout = Fs/2^{28} \cdot Dsum$

Fs : DDS IC input frequency/2

Dsum : Frequency data+Frequency modulation data

If 2^{25} is set for Dsum when 1/8 Fs is output, the phase data must be increased by $\pi/8$.

A 28 bit absolute value operation has been used here, but a 28 bit signed operation can also be used, assuming that the MSB is a sign. If complement data of 8000000 to FFFFFFFF (hex) is set, the phase moves in the negative direction for the positive data.

7) SIN-ROM

Phase data from the phase data operation section is converted to sine data of 0000 to FFFF (hex) in the 16 bit offset binary format.

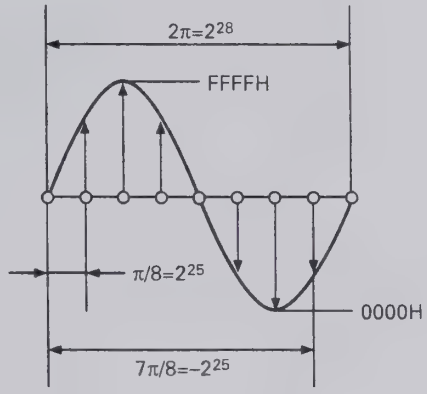

CIRCUIT DESCRIPTION

Receiver Circuit

The basic configuration of the receiver circuit is quadruple conversion. After the frequency is converted to the 11.3kHz fourth IF, the DSP carries out AGC, filtering, detection, and signal processing. Figure 3 is a receiver block diagram.

The signal coming from the antenna connector is passed through the antenna switching relay (K301) in the final unit (E/5 relay section), the antenna tuner unit, and the transmit/receive changeover relay (K302) within the relay section, and then goes to the CN2 (RAT) of the RF unit (A/9 RF section).

The signal input to the RF unit is passed through protection lamp PL1 for strong signal input, external receiver power distribution circuit L1 and L2 and switching circuit K1, and is input to the ATT (–6dB, –12dB) circuit. This distribution circuit is switched when the EXT RX (function that distributes the signals from the antenna to the external receiver), which is set from menu No.53, is turned ON. When this function is ON, the signal from the antenna is attenuated by about 4dB and output to the receiver section in the subsequent stage and the EXT RX terminal on the rear. The signal to the EXT RX terminal is passed through lamp PL2 for protection during transmission. The lamp turns OFF when about 10W is input.

The signal is passed through the ATT switching circuit, then goes to the BC band attenuation circuit (L7 to L9, C19 to C22). The BC band signal is attenuated by 5 to 10dB to prevent power saturation of the band-pass filter switching diode resulting from interference from a proximate station. The band-pass filter consists of two low-pass filters and 10 band-pass filters, and passes signals during transmission. The pin diode (1SV128) is used to change the input to raise the signal saturation level when a HIGH signal is input.

The RF amplifier circuit functions as a low-gain amplifier using Q14 and Q15 : 2SK2218(5) x 2 when the frequency is 21.49MHz or lower, and it functions as a high-gain amplifier using Q13 : 3SK131(M) when the frequency is higher than 21.49MHz. It is bypassed when AIP is ON.

The 73.05MHz first IF signal is generated by quad mixer Q17 to Q20 : 2SK520(K44) x 4. It is passed through XF1 73.05MHz MCF, Q24 : 3SK131(M) first mixer amplifier, and Q26 and Q27 : 2SK520(K43) mixer to produce a 8.83MHz second IF signal. The second IF signal is divided into two signals, one of which is branched to the noise blanker, amplified by amplifier Q28, and then goes to the NB circuit. The other signal is input to the second IF signal amplifier, and serves as a blanking gate by the NB and RBK signals. The amplified second IF signal is passed through the 8.83MHz IF filter, and output to the final unit (C/5 connection section) from CN10. This signal is switched with the diode switch D62 and D68, and functions as a second IF signal output during reception and a third IF signal input during transmission.

The second IF signal input to CN412 in the final unit (C/5 connection section) is routed to the receiver circuit by D450, and input to the mixer Q460 and Q461 to generate a 455kHz third IF signal. It is passed through the 455kHz IF filter, amplified by third IF amplifier Q475, and output by CN411 to the TX-RX unit as RIF signal. The total gain of the receiver unit is adjusted by VR1 in the TX-RX unit.

■ IF filter

The IF filter consists of a DSP digital filter. If there is a HIGH signal outside the DSP filter band, the analog to digital converter input level may be saturated, and the filter does not work properly. Thus, an analog filter is inserted between the second IF (8.83MHz) and the third IF (455kHz) so that it does not impair the DSP filter properties. To operate each filter properly, there are three kinds of filters for each IF signal and also slope tuning is carried out.

1) Filters characteristics

Item	Rating
Nominal center frequency	73.05MHz
Pass bandwidth	±7.5kHz or more at 3dB
Attenuation bandwidth	±30kHz or less at 40dB
Ripple	1.0dB or less
Insertion loss	3.0dB or less
Guaranteed attenuation	70dB or more at fo + (500 to 1000kHz) 70dB or more at fo – (200 to 1000kHz)
Center frequency deviation	Within ±1.5kHz at 3dB
Terminating impedance	2kΩ ± 10%

MCF (L71-0401-05) : RF unit XF1

Item	Rating
Nominal center frequency	8830kHz
Center frequency deviation	Within ±150Hz at 6dB
Pass bandwidth	±1.5kHz or more at 6dB
Attenuation bandwidth	±1.9kHz or less at 20dB ±2.75kHz or less at 60dB ±3.5kHz or less at 80dB
Ripple	2dB or less
Insertion loss	6dB or less
Guaranteed attenuation	80dB or more in the range ±3.5kHz to ±1MHz
Terminating impedance	600Ω / 15pF

MCF (L71-0235-05) : RF unit XF2

Item	Rating
Nominal center frequency	8830kHz
Pass bandwidth	±3.0kHz or more at 6dB
Attenuation bandwidth	±16.0kHz or less at 60dB ±13.0kHz or less at 50dB
Guaranteed attenuation	70dB or more with in fo ± 1MHz (Without spurious in the range fo to fo+500kHz)
Ripple	Within 1.0dB
Insertion loss	Within 1.5dB
Terminating impedance	1850kΩ / 2pF

MCF (L71-0266-05) : RF unit XF3

Item	Rating
Nominal center frequency	8.400MHz
3dB attenuation bandwidth	Within 180 ± 40kHz
20dB attenuation bandwidth	400kHz or less
Insertion loss	9.0dB or less Formula : 20 x log [E1÷ (2 x E2)]
Ripple	1.0dB or less (within 3dB band)
Spurious attenuation	25dB or more (6.0 to 10.0MHz)
Voltage capacity	50V DC (1 minute)
Insulating resistance	100MΩ or more (100V DC)
Input and output impedance	330Ω

Ceramic filter (L72-0343-05) : RF unit CF500, 501

Item	Rating
Nominal center frequency	455kHz
6dB bandwidth	±3kHz (455kHz)
50dB bandwidth	±9kHz (455kHz)
Ripple	2dB or less (within 455+2kHz)
Insertion loss	6dB or less
Guaranteed attenuation	60dB or more (within 455±100kHz)
Input and output impedance	2.0kΩ

Ceramic filter (L72-0319-05) : Final unit CF451

Item	Rating
Center frequency	455±0.20kHz
6dB bandwidth	2.9 to 3 2kHz
60dB bandwidth	4.7kHz or less
Guaranteed attenuation	60dB or more at 0.1 to 1MHz
Spurious	40dB or more at 600 to 700kHz
6dB band ripple	2dB or less
Insertion loss	6dB or less
Input and output impedance	2kΩ

Ceramic filter (L72-0333-05) : Final unit CF452

Item	Rating
Nominal center frequency	455kHz
6dB bandwidth	±7.5kHz or more (455kHz)
50dB bandwidth	±15kHz or less (455kHz)
Ripple	3dB or less (within 455+5kHz)
Insertion loss	6dB or less
Guaranteed attenuation	35dB or more (within 455±100kHz)
Input and output impedance	1.5kΩ

Ceramic filter (L72-0366-05) : Final unit CF453

CIRCUIT DESCRIPTION

Receiver Circuit

The basic configuration of the receiver circuit is quadruple conversion. After the frequency is converted to the 11.3kHz fourth IF, the DSP carries out AGC, filtering, detection, and signal processing. Figure 3 is a receiver block diagram.

The signal coming from the antenna connector is passed through the antenna switching relay (K301) in the final unit (E/5 relay section), the antenna tuner unit, and the transmit/receive changeover relay (K302) within the relay section, and then goes to the CN2 (RAT) of the RF unit (A/9 RF section).

The signal input to the RF unit is passed through protection lamp PL1 for strong signal input, external receiver power distribution circuit L1 and L2 and switching circuit K1, and is input to the ATT (–6dB, –12dB) circuit. This distribution circuit is switched when the EXT RX (function that distributes the signals from the antenna to the external receiver), which is set from menu No.53, is turned ON. When this function is ON, the signal from the antenna is attenuated by about 4dB and output to the receiver section in the subsequent stage and the EXT RX terminal on the rear. The signal to the EXT RX terminal is passed through lamp PL2 for protection during transmission. The lamp turns OFF when about 10W is input.

The signal is passed through the ATT switching circuit, then goes to the BC band attenuation circuit (L7 to L9, C19 to C22). The BC band signal is attenuated by 5 to 10dB to prevent power saturation of the band-pass filter switching diode resulting from interference from a proximate station. The band-pass filter consists of two low-pass filters and 10 band-pass filters, and passes signals during transmission. The pin diode (1SV128) is used to change the input to raise the signal saturation level when a HIGH signal is input.

The RF amplifier circuit functions as a low-gain amplifier using Q14 and Q15 : 2SK2218(5) x 2 when the frequency is 21.49MHz or lower, and it functions as a high-gain amplifier using Q13 : 3SK131(M) when the frequency is higher than 21.49MHz. It is bypassed when AIP is ON.

The 73.05MHz first IF signal is generated by quad mixer Q17 to Q20 : 2SK520(K44) x 4. It is passed through XF1 73.05MHz MCF, Q24 : 3SK131(M) first mixer amplifier, and Q26 and Q27 : 2SK520(K43) mixer to produce a 8.83MHz second IF signal. The second IF signal is divided into two signals, one of which is branched to the noise blanker, amplified by amplifier Q28, and then goes to the NB circuit. The other signal is input to the second IF signal amplifier, and serves as a blanking gate by the NB and RBK signals. The amplified second IF signal is passed through the 8.83MHz IF filter, and output to the final unit (C/5 connection section) from CN10. This signal is switched with the diode switch D62 and D68, and functions as a second IF signal output during reception and a third IF signal input during transmission.

The second IF signal input to CN412 in the final unit (C/5 connection section) is routed to the receiver circuit by D450, and input to the mixer Q460 and Q461 to generate a 455kHz third IF signal. It is passed through the 455kHz IF filter, amplified by third IF amplifier Q475, and output by CN411 to the TX-RX unit as RIF signal. The total gain of the receiver unit is adjusted by VR1 in the TX-RX unit.

CIRCUIT DESCRIPTION

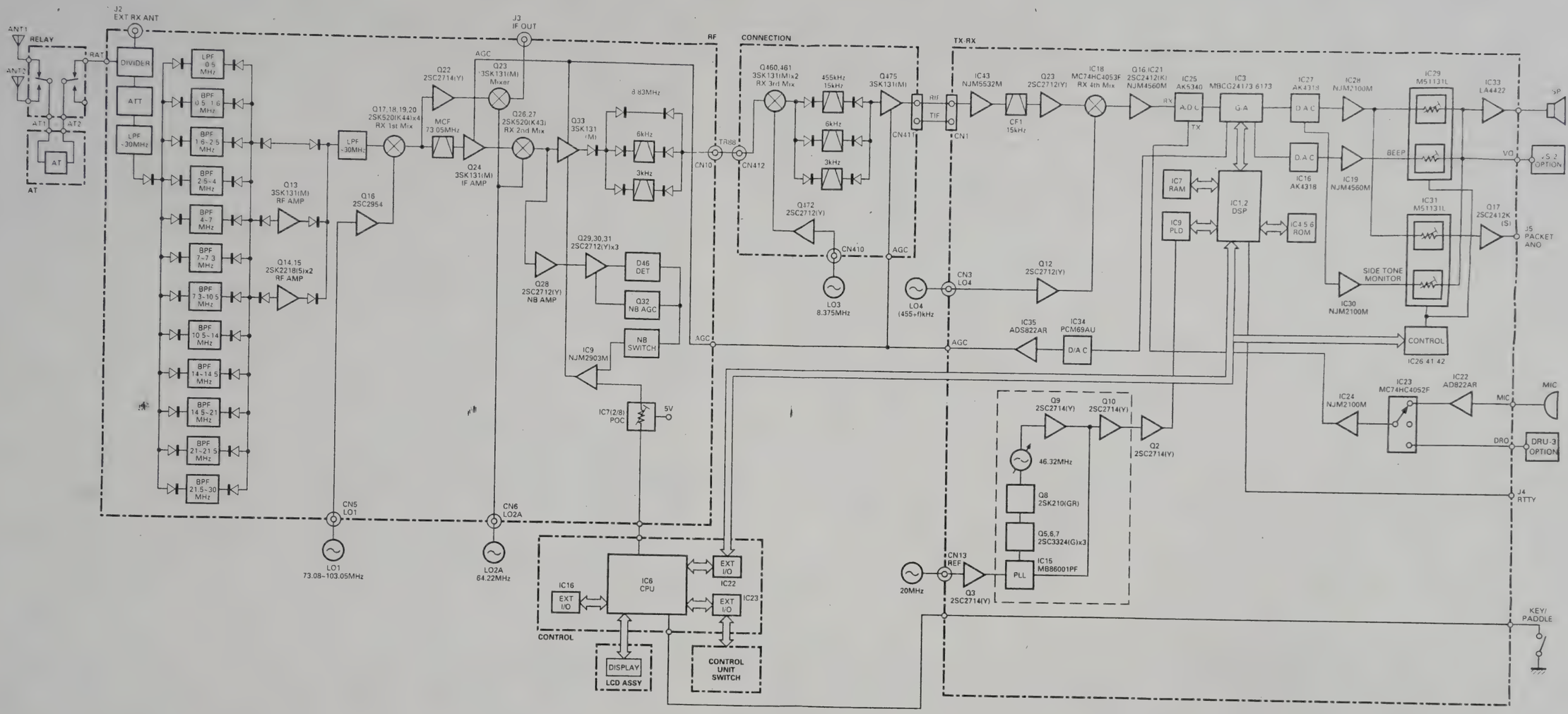

Fig. 3 Receiver block diagram

CIRCUIT DESCRIPTION

■ IF gain correction

The total gain changes when the AIP is turned ON or OFF or the band is 21.49MHz or higher. To limit the changes, the DSP corrects the IF gain. Table 2 lists the corrections. When the "AIP S-meter correction" on menu No.11 is turned ON, the S-meter is corrected when the AIP is turned ON. And since the IF gain is corrected greatly, the receiver internal noise output becomes large.

Frequency	Correction (dB)			Pre-amp gain (dB) reference
	AIP			
	OFF	ON1 (Menu 11 OFF)	ON2 (Menu 11 ON) SSB, CW, FSK only	
30kHz~ 21.49MHz	–2	0	+12	15
21.49MHz~ 30.MHz	–7	0	+12	21

Table 2 IF gain corrections

■ NB circuit

The noise blanker, like the conventional one, branches the signal before the narrow-band filter of the 8.83MHz second IF, and detects noise, and performs blanking using the second IF amplifier as a gate. The signal is amplified by Q28, detected by the AGC amplification and noise detection circuit consisting of Q29 to Q32 and D46, and then a blanking pulse is generated by the IC9 comparator. The noise detection circuit Q29 to Q32 and D46 is separated into segments by a jumper in the unit to prevent sneak path.

■ Slope tune

The operating principle of SSB-SLOPE-TUNE is explained first. When f_{LO1}, f_{LO3}, and f_{LO4} in Figure 4 are at their normal frequencies, the synthesized bandwidth is indicated by A. If the f_{LO1} frequency is increased by $\Delta f1$ and the f_{LO3} frequency is decreased by $\Delta f1$, the filter of the 8.83MHz band shifts to position B. The synthesized bandwidth is indicated by the section overlapped by A and B. When the frequencies of f_{LO1} and f_{LO3} are lowered by $\Delta f2$, only the 455kHz second IF filter shifts to position C. The synthesized bandwidth is indicated by the section overlapped by B and C.

Therefore, high frequencies are cut off by increasing the f_{LO1} frequency and decreasing the f_{LO3} frequency. Low frequencies are cut off by decreasing the f_{LO3} and f_{LO4} frequencies. The TS-870S enables these operations using the DSP filter.

In SSB mode, slope tune high cut/low cut is switched by using the filter select control : in CW mode, the WIDTH (bandwidth)/SHIFT (center frequency) is changed, and in FSK mode, the WIDTH (bandwidth) is changed. The microcomputer in the control unit sends filter select data to the DSP, and slope tuning is carried out by changing frequency data given to the PLL and DDS. The second IF (8.83MHz) and third IF (455kHz) filters are selected to carry out slope tuning effectively. Tables 3 and 4 list filter selections, slope tuning and analog filter high cut/low cut amounts. Slope tuning low cut/high cut can be switched in AM mode, and the WIDTH can be switched in FM mode by using DSP filters only, and the analog filter is fixed to 15kHz.

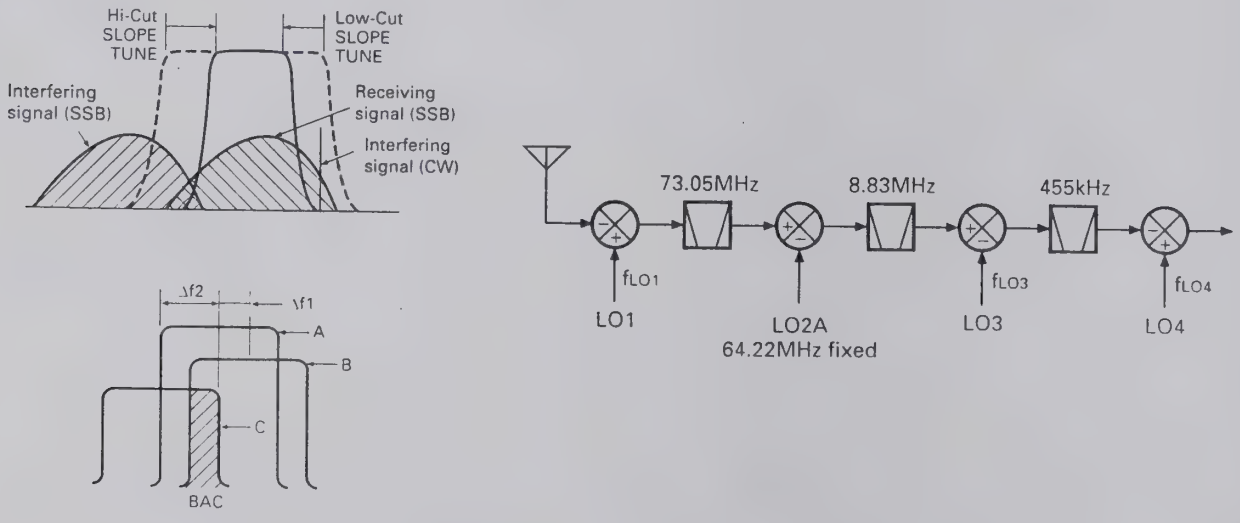

Fig. 4 SSB slope tune operating principle

CIRCUIT DESCRIPTION

	1.4k	1.6k	1.8k	2.0k	2.2k	2.4k	2.6k	2.8k	3.0k	3.4k	4.6k	6.0k
0 (Hz)	1.0k	0.8k	0.6k	0.4k	0.2k	0.0k	1.4k	1.2k	1.0k	0.6k	0.0k	0.0k
50	↑	↑	↑	↑	↑	↑	↑	↑	↑	↑	↑	↑
100	↑	↑	↑	↑	↑	↑	↑	↑	↑	↑	↑	↑
200	↑	↑	↑	↑	↑	↑	−0.2k	↑	↑	↑	↑	↑
300	↑	↑	↑	↑	↑	↑	↑	↑	↑	↑	↑	↑
400	↑	↑	↑	↑	↑	↑	↑	−0.4k	↑	↑	↑	↑
500	↑	↑	↑	↑	↑	↑	↑	↑	↑	↑	↑	↑
600	↑	↑	↑	↑	↑	↑	↑	↑	−0.6k	↑	↑	↑
800	↑	↑	↑	↑	↑	↑	↑	↑	↑	↑	−0.6k	↑
1000	↑	↑	↑	↑	↑	↑	↑	↑	↑	−1.0k	↑	↑

← High cut position

Filter selection
- 3kHz filter
- 6kHz filter
- 15kHz filter
- Default

↑
Low cut posotion
(455kHz filter) Low cut amount

(8.83MHz filter) High cut amount

Table 3 SSB slop tuning and analog filter high/low cut (Hz)

	400	450	500	550	600	650	700	750	800	850	900	950	1000
50 (Hz)	375	425	475	525	575	625	675	725	775	825	875	925	975
100	350	400	450	500	550	600	650	700	750	800	850	900	950
200	300	350	400	450	500	550	600	650	700	750	800	850	900
400	200	250	300	350	400	450	500	550	600	650	700	750	800
600	100	150	200	250	300	350	400	450	500	550	600	650	700
1000	−100	−50	0	50	100	150	200	250	300	350	400	450	500

← Filter center position

Default

↑
Filter width

Table 4-1 CW WIDTH/SHIFT low cut amount (Hz)

	400	450	500	550	600	650	700	750	800	850	900	950	1000
50 (Hz)	1975	1925	1875	1825	1775	1725	1675	1625	1575	1525	1475	1425	1375
100	1950	1900	1850	1800	1750	1700	1650	1600	1550	1500	1450	1400	1350
200	1900	1850	1800	1750	1700	1650	1600	1550	1500	1450	1400	1350	1300
400	1800	1750	1700	1650	1600	1550	1500	1450	1400	1350	1300	1250	1200
600	1700	1650	1600	1550	1500	1450	1400	1350	1300	1250	1200	1150	1100
1000	1500	1450	1400	1350	1300	1250	1200	1150	1100	1050	1000	950	900

← Filter center position

Default

↑
Filter width

Table 4-2 CW WIDTH/SHIFT high cut amount (Hz)

■ IF filter

The IF filter consists of a DSP digital filter. If there is a HIGH signal outside the DSP filter band, the analog to digital converter input level may be saturated, and the filter does not work properly. Thus, an analog filter is inserted between the second IF (8.83MHz) and the third IF (455kHz) so that it does not impair the DSP filter properties. To operate each filter properly, there are three kinds of filters for each IF signal and also slope tuning is carried out.

1) Filters characteristics

Item	Rating
Nominal center frequency	73.05MHz
Pass bandwidth	±7.5kHz or more at 3dB
Attenuation bandwidth	±30kHz or less at 40dB
Ripple	1.0dB or less
Insertion loss	3.0dB or less
Guaranteed attenuation	70dB or more at fo + (500 to 1000kHz) 70dB or more at fo – (200 to 1000kHz)
Center frequency deviation	Within ±1.5kHz at 3dB
Terminating impedance	2kΩ ± 10%

MCF (L71-0401-05) : RF unit XF1

Item	Rating
Nominal center frequency	8830kHz
Center frequency deviation	Within ±150Hz at 6dB
Pass bandwidth	±1.5kHz or more at 6dB
Attenuation bandwidth	±1.9kHz or less at 20dB ±2.75kHz or less at 60dB ±3.5kHz or less at 80dB
Ripple	2dB or less
Insertion loss	6dB or less
Guaranteed attenuation	80dB or more in the range ±3.5kHz to ±1MHz
Terminating impedance	600Ω / 15pF

MCF (L71-0235-05) : RF unit XF2

Item	Rating
Nominal center frequency	8830kHz
Pass bandwidth	±3.0kHz or more at 6dB
Attenuation bandwidth	±16.0kHz or less at 60dB ±13.0kHz or less at 50dB
Guaranteed attenuation	70dB or more with in fo ± 1MHz (Without spurious in the range fo to fo+500kHz)
Ripple	Within 1.0dB
Insertion loss	Within 1.5dB
Terminating impedance	1850kΩ / 2pF

MCF (L71-0266-05) : RF unit XF3

Item	Rating
Nominal center frequency	8.400MHz
3dB attenuation bandwidth	Within 180 ± 40kHz
20dB attenuation bandwidth	400kHz or less
Insertion loss	9.0dB or less Formula : 20 x log [E1÷ (2 x E2)]
Ripple	1.0dB or less (within 3dB band)
Spurious attenuation	25dB or more (6.0 to 10.0MHz)
Voltage capacity	50V DC (1 minute)
Insulating resistance	100MΩ or more (100V DC)
Input and output impedance	330Ω

Ceramic filter (L72-0343-05) : RF unit CF500, 501

Item	Rating
Nominal center frequency	455kHz
6dB bandwidth	±3kHz (455kHz)
50dB bandwidth	±9kHz (455kHz)
Ripple	2dB or less (within 455+2kHz)
Insertion loss	6dB or less
Guaranteed attenuation	60dB or more (within 455±100kHz)
Input and output impedance	2.0kΩ

Ceramic filter (L72-0319-05) : Final unit CF451

Item	Rating
Center frequency	455±0.20kHz
6dB bandwidth	2.9 to 3.2kHz
60dB bandwidth	4.7kHz or less
Guaranteed attenuation	60dB or more at 0.1 to 1MHz
Spurious	40dB or more at 600 to 700kHz
6dB band ripple	2dB or less
Insertion loss	6dB or less
Input and output impedance	2kΩ

Ceramic filter (L72-0333-05) : Final unit CF452

Item	Rating
Nominal center frequency	455kHz
6dB bandwidth	±7.5kHz or more (455kHz)
50dB bandwidth	±15kHz or less (455kHz)
Ripple	3dB or less (within 455+5kHz)
Insertion loss	6dB or less
Guaranteed attenuation	35dB or more (within 455±100kHz)
Input and output impedance	1.5kΩ

Ceramic filter (L72-0366-05) : Final unit CF453

■ IF gain correction

The total gain changes when the AIP is turned ON or OFF or the band is 21.49MHz or higher. To limit the changes, the DSP corrects the IF gain. Table 2 lists the corrections. When the "AIP S-meter correction" on menu No.11 is turned ON, the S-meter is corrected when the AIP is turned ON. And since the IF gain is corrected greatly, the receiver internal noise output becomes large.

Frequency	Correction (dB)			Pre-amp gain (dB) reference
	AIP			
	OFF	ON1 (Menu 11 OFF)	ON2 (Menu 11 ON) SSB, CW, FSK only	
30kHz~ 21.49MHz	–2	0	+12	15
21.49MHz~ 30.MHz	–7	0	+12	21

Table 2 IF gain corrections

■ NB circuit

The noise blanker, like the conventional one, branches the signal before the narrow-band filter of the 8.83MHz second IF, and detects noise, and performs blanking using the second IF amplifier as a gate. The signal is amplified by Q28, detected by the AGC amplification and noise detection circuit consisting of Q29 to Q32 and D46, and then a blanking pulse is generated by the IC9 comparator. The noise detection circuit Q29 to Q32 and D46 is separated into segments by a jumper in the unit to prevent sneak path.

■ Slope tune

The operating principle of SSB-SLOPE-TUNE is explained first. When f_{LO1}, f_{LO3}, and f_{LO4} in Figure 4 are at their normal frequencies, the synthesized bandwidth is indicated by A. If the f_{LO1} frequency is increased by $\Delta f1$ and the f_{LO3} frequency is decreased by $\Delta f1$, the filter of the 8.83MHz band shifts to position B. The synthesized bandwidth is indicated by the section overlapped by A and B. When the frequencies of f_{LO1} and f_{LO3} are lowered by $\Delta f2$, only the 455kHz second IF filter shifts to position C. The synthesized bandwidth is indicated by the section overlapped by B and C.

Therefore, high frequencies are cut off by increasing the f_{LO1} frequency and decreasing the f_{LO3} frequency. Low frequencies are cut off by decreasing the f_{LO3} and f_{LO4} frequencies. The TS-870S enables these operations using the DSP filter.

In SSB mode, slope tune high cut/low cut is switched by using the filter select control : in CW mode, the WIDTH (bandwidth)/SHIFT (center frequency) is changed, and in FSK mode, the WIDTH (bandwidth) is changed. The microcomputer in the control unit sends filter select data to the DSP, and slope tuning is carried out by changing frequency data given to the PLL and DDS. The second IF (8.83MHz) and third IF (455kHz) filters are selected to carry out slope tuning effectively. Tables 3 and 4 list filter selections, slope tuning and analog filter high cut/low cut amounts. Slope tuning low cut/high cut can be switched in AM mode, and the WIDTH can be switched in FM mode by using DSP filters only, and the analog filter is fixed to 15kHz.

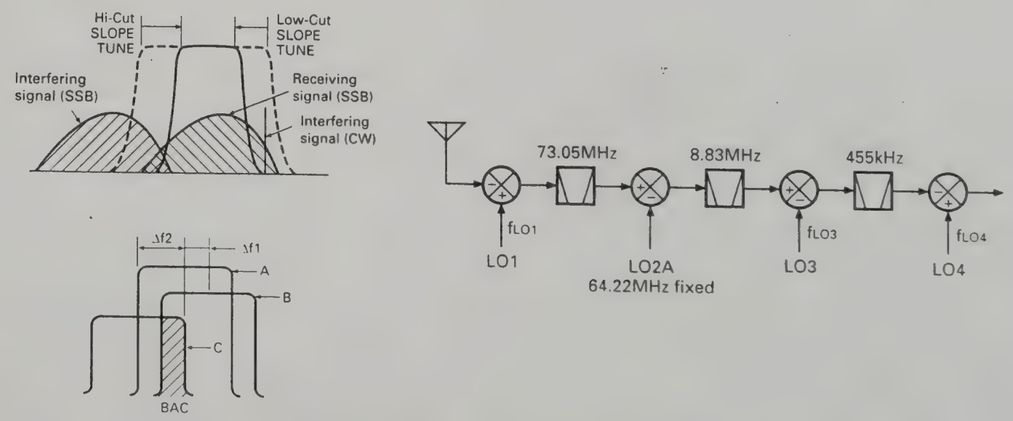

Fig. 4 SSB slope tune operating principle

CIRCUIT DESCRIPTION

	1.4k	1.6k	1.8k	2.0k	2.2k	2.4k	2.6k	2.8k	3.0k	3.4k	4.6k	6.0k
0 (Hz)	1.0k	0.8k	0.6k	0.4k	0.2k	0.0k	1.4k	1.2k	1.0k	0.6k	0.0k	0.0k
50	↑	↑	↑	↑	↑	↑	↑	↑	↑	↑	↑	↑
100	↑	↑	↑	↑	↑	↑	↑	↑	↑	↑	↑	↑
200	↑	↑	↑	↑	↑	↑	-0.2k	↑	↑	↑	↑	↑
300	↑	↑	↑	↑	↑	↑	↑	↑	↑	↑	↑	↑
400	↑	↑	↑	↑	↑	↑	↑	-0.4k	↑	↑	↑	↑
500	↑	↑	↑	↑	↑	↑	↑	↑	↑	↑	↑	↑
600	↑	↑	↑	↑	↑	↑	↑	↑	-0.6k	↑	↑	↑
800	↑	↑	↑	↑	↑	↑	↑	↑	↑	↑	-0.6k	↑
1000	↑	↑	↑	↑	↑	↑	↑	↑	↑	-1.0k	↑	↑

← High cut position

Filter selection
- 3kHz filter
- 6kHz filter
- 15kHz filter
- Default

↑
Low cut posotion
(455kHz filter) Low cut amount

(8.83MHz filter) High cut amount

Table 3 SSB slop tuning and analog filter high/low cut (Hz)

	400	450	500	550	600	650	700	750	800	850	900	950	1000
50 (Hz)	375	425	475	525	575	625	675	725	775	825	875	925	975
100	350	400	450	500	550	600	650	700	750	800	850	900	950
200	300	350	400	450	500	550	600	650	700	750	800	850	900
400	200	250	300	350	400	450	500	550	600	650	700	750	800
600	100	150	200	250	300	350	400	450	500	550	600	650	700
1000	-100	-50	0	50	100	150	200	250	300	350	400	450	500

← Filter center position

Default

↑
Filter width

Table 4-1 CW WIDTH/SHIFT low cut amount (Hz)

	400	450	500	550	600	650	700	750	800	850	900	950	1000
50 (Hz)	1975	1925	1875	1825	1775	1725	1675	1625	1575	1525	1475	1425	1375
100	1950	1900	1850	1800	1750	1700	1650	1600	1550	1500	1450	1400	1350
200	1900	1850	1800	1750	1700	1650	1600	1550	1500	1450	1400	1350	1300
400	1800	1750	1700	1650	1600	1550	1500	1450	1400	1350	1300	1250	1200
600	1700	1650	1600	1550	1500	1450	1400	1350	1300	1250	1200	1150	1100
1000	1500	1450	1400	1350	1300	1250	1200	1150	1100	1050	1000	950	900

← Filter center position

Default

↑
Filter width

Table 4-2 CW WIDTH/SHIFT high cut amount (Hz)

CIRCUIT DESCRIPTION

■ Local signals (LO1, LO3, LO4)

1) LO1

Table 5 lists LO1 frequency configuration.

DDS1 varies from 0.46 to 1.46MHz, and when the display frequency is multiple MHz (for example, 14.000MHz), 0.96MHz is output. When the display frequency is increased, the DDS1 frequency is reduced by the amount of change. When the DDS1 frequency is reduced to 0.46MHz, the frequency is switched to 1.46MHz, and when it is increased to 1MHz, the frequency returns to 0.96MHz (Figure 5). By changing the 1MHz band in synchronization with the display frequency, the 1MHz comparison PLL circuit is locked and LO1 is generated.

In Table 5, the 0.96MHz base indicates the DDS output when the frequency is multiple MHz. The frequency (UNV) indicates the decimal digits of the MHz frequency. (If the display frequency is 14.2MHz, (UNV) = 0.2MHz.) DDS is switched by 500kHz, so – 0.5MHz ≤ (UNV) < 0.5MHz.

As described in the slope tuning section, slope tuning high-cutting is corrected for LO1, so the correction is added to the DDS output. SSB H in Table 5 indicates the correction. Table 3 shows the actual correction of SSB H. (For example, when the high frequency is 2.2kHz, the correction SSB H is 0.2kHz.)

Since RIT and XIT change the receive and transmit frequencies by the preset amount, it needs to be corrected. They are D RIT and D XIT in Table 5.

The "8.83MHz window-joining" (D 883) in Table 5 is determined during adjustment. For example, the equation for calculating the DDS output frequency for 14.2MHz USB. The high-cut frequency is assumed to be 2.6kHz. (D 833 is zero.)

DDS1 : 0.96M – (UNV) – (OFS SSB) + (SSB H)
= 0.96M – 0.2M – 1.2k – 0.2k
= 758.6kHz
0.96M : Base
UNV : 14.2M – 14.0M = 0.2M
OFS SSB (Filter offset) : 1.2k
SSB H (Slope HI) : –0.2k (See table 3.)

The LO1 output frequency f_{LO1} is calculated from the frequency configuration in Figure 6.

$f_{LO1} = f_{PLL\ IN} + 60MHz - (4MHz + f_{DDS1})$
$= 32MHz + 60MHz - (4MHz + 758.6kHz)$
$= 87.2414MHz$

Where $f_{PLL\ IN}$ is the PLL input frequency and f_{DDS1} is the DDS1 output frequency.

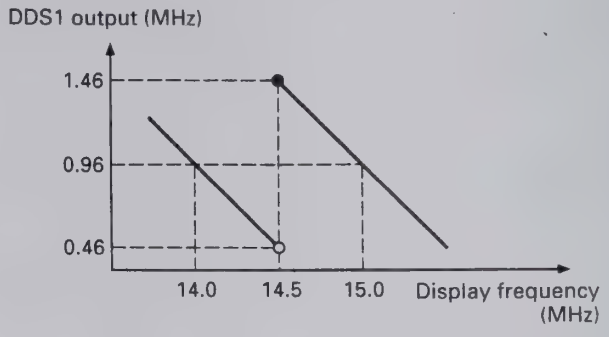

Fig. 5 Relationship between display frequency and DDS output frequency

2) LO3

Table 6 lists the LO3 frequency configuration.

The LO3 frequency is 8.375MHz, and is generated by the chopper circuit. The DDS2 output frequency is 1.625MHz. For LO3, slope tuning low-cut/high-cut is corrected. SSB H and SSB L in Table 6 indicate the corrections. D 833 and D 455 are values determined during filter window-joining and adjustment.

For example, if USB is 14.2MHz, high-cut frequency is 2.6kHz, and low-cut frequency is 300Hz, the LO3 frequency is calculated as follows. It is assumed that D 833 and D 455 are zero.

$f_{LO3} = 1.625MHz + (SSB\ H) + (SSB\ L)$
$= 1.625MHz + (-0.2kHz) + 300Hz$
$= 1625.1kHz$

CIRCUIT DESCRIPTION

3) LO4

Table 7 lists the LO4 frequency configuration.

For LO4, correction (OFS SSB) is carried out so that a signal passes through a filter according to the mode, and the slope tune low-cut (SSB L) is corrected. The mode offset is the frequency (11.30859375kHz) used for processing by the DSP, and its sign changes with the mode.

For example, if USB is 14.2MHz and the low-cut frequency is 300Hz, the LO4 output frequency is calculated as follows.

fLO4 = 455kHz + (mode offset) + (OFS SSB) + (SSB L)
= 455kHz + 11.30859375kHz + 300Hz
= 467.8085938kHz

The filter is corrected according to each mode by LO1 and LO4, slope tuning high-cut is corrected by LO1 and LO3, and low-cut is corrected by LO3 and LO4.

In other modes, each local frequency is determined by the calculation method as shown previously in Tables 5 to 7.

Component	DDS1 (1HZ)															
	LSB		USB		CW		CW-R		FSK		FSK-R		AM		FM	
	RX	TX	RX	TX	RX	TX	RX	TX	RX	TX	RX	TX	RX	TX	RX	TX
BASE	0.96MHz*6															
Frequency (100kHz or less)	– (UNV)															
Mode offset																
Filter offset*1	+ (OFS SSB)	+2k	– (OFS SSB)	–2k	–800		+800									
CW pitch					+ (PITCH)		– (PITCH)									
FSK tone (H/L)																
FSK shift (polarity)																
RIT	– (D RIT)		– (D RIT)		– (D RIT)		– (D RIT)		– (D RIT)		– (D RIT)		– (D RIT)		– (D RIT)	
XIT		– (D RIT)		– (D RIT)		– (D RIT)		– (D RIT)		– (D RIT)		– (D RIT)		– (D RIT)		– (D RIT)
Slope high*2, 3	– (SSB H)		+ (SSB H)		+ (CW H)		– (CW H)		– (FSK H)		+ (FSK H)					
Slope low																
8.83MHz window-joining*4, 5	– (D 883)			+ (D 883)												
455kHz window-joining																

*1 : Although receiver data has an independent value for each mode, the data area for calculation is D OFFSET.
Transmitter data is fixed because the 8.83MHz filter bandwidth is fixed.

*2 : Although it has an independent value for each mode, the data area for calculation is D SLOP L.

*3 : The slope low-cut is carried out at 455kHz and high-cut is carried out at 8.83MHz.

*4 : The LSB and USB may have the same value because the filter bandwidth is wide.

*5 : The positive direction for adjustment is the direction in which the receive carrier frequency increases.

*6 : The DDS1 variable frequency is 1.45MHz and is shifted by 500kHz.

Table 5 LO1 frequency configuration

CIRCUIT DESCRIPTION

Component	DDS2 (LO3)															
	LSB		USB		CW		CW-R		FSK		FSK-R		AM		FM	
	RX	TX	RX	TX	RX	TX	RX	TX	RX	TX	RX	TX	RX	TX	RX	TX
BASE	1.625MHz*6															
Mode offset																
Filter offset																
CW pitch																
FSK tone (H/L)																
FSK shift (polarity)																
RIT/XIT																
Slope high*1, 3	– (SSB H)		+ (SSB H)		+ (CW H)		– (CW H)		– (FSK H)		+ (FSK H)					
Slope low*2, 3	– (SSB L)		+ (SSB L)		+ (CW L)		– (CW L)		– (FSK L)		+ (FSK L)					
8.83MHz window-joining*4, 5	– (D 883)			+ (D 883)												
455kHz window-joining*4, 5	+ (D 455)			– (D 455)												

*1 : Although it has an independent value for each mode.

*2 : Although it has an independent value for each mode.

*3 : The slope low-cut is carried out at 455kHz and high-cut is carried out at 8.83MHz.

*4 : The LSB and USB may have the same value because the filter bandwidth is wide.

*5 : The positive direction for adjustment is the direction in which the receive carrier frequency increases.

*6 : Since the DDS2 output frequency is high, 1.625MHz (10MHz – output frequency (8.375MHz)) is output to the DDS.

Table 6 LO3 frequency configuration

Component	DDS3 (LO4)															
	LSB		USB		CW		CW-R		FSK		FSK-R		AM		FM	
	RX	TX	RX	TX	RX	TX	RX	TX	RX	TX	RX	TX	RX	TX	RX	TX
BASE	455kHz															
Mode offset (kHz)	–11.30859375		+11.30859375		+11.30859375		–11.30859375		–11.30859375		+11.30859375		+11.30859375		+11.30859375	
Filter offset*1	– (OFS SSB)	–2k	+ (OFS SSB)	+2k	+800		–800									
CW pitch																
FSK tone (H/L)									–2125 /–1275		+2125 /+1275					
FSK shift (polarity)											+ (FSK S)	+ (FSK S)				
RIT/XIT																
Slope high																
Slope low*2, 3	– (SSB L)		+ (SSB L)		+ (CW L)		– (CW L)		– (FSK L)		+ (FSK L)					
8.83MHz window-joining																
455kHz window-joining*4, 5	– (D 455)			+ (D 455)												

*1 : Although receiver data has an independent value for each mode.
Transmitter data is fixed because the 8.83MHz filter bandwidth is fixed.

*2 : Although it has an independent value for each mode.

*3 : The slope low-cut is carried out at 455kHz and high-cut is carried out at 8.83MHz.

*4 : The LSB and USB may have the same value because the filter bandwidth is wide.

*5 : The positive direction for adjustment is the direction in which the receive carrier frequency increases.

Table 7 LO4 frequency configuration

CIRCUIT DESCRIPTION

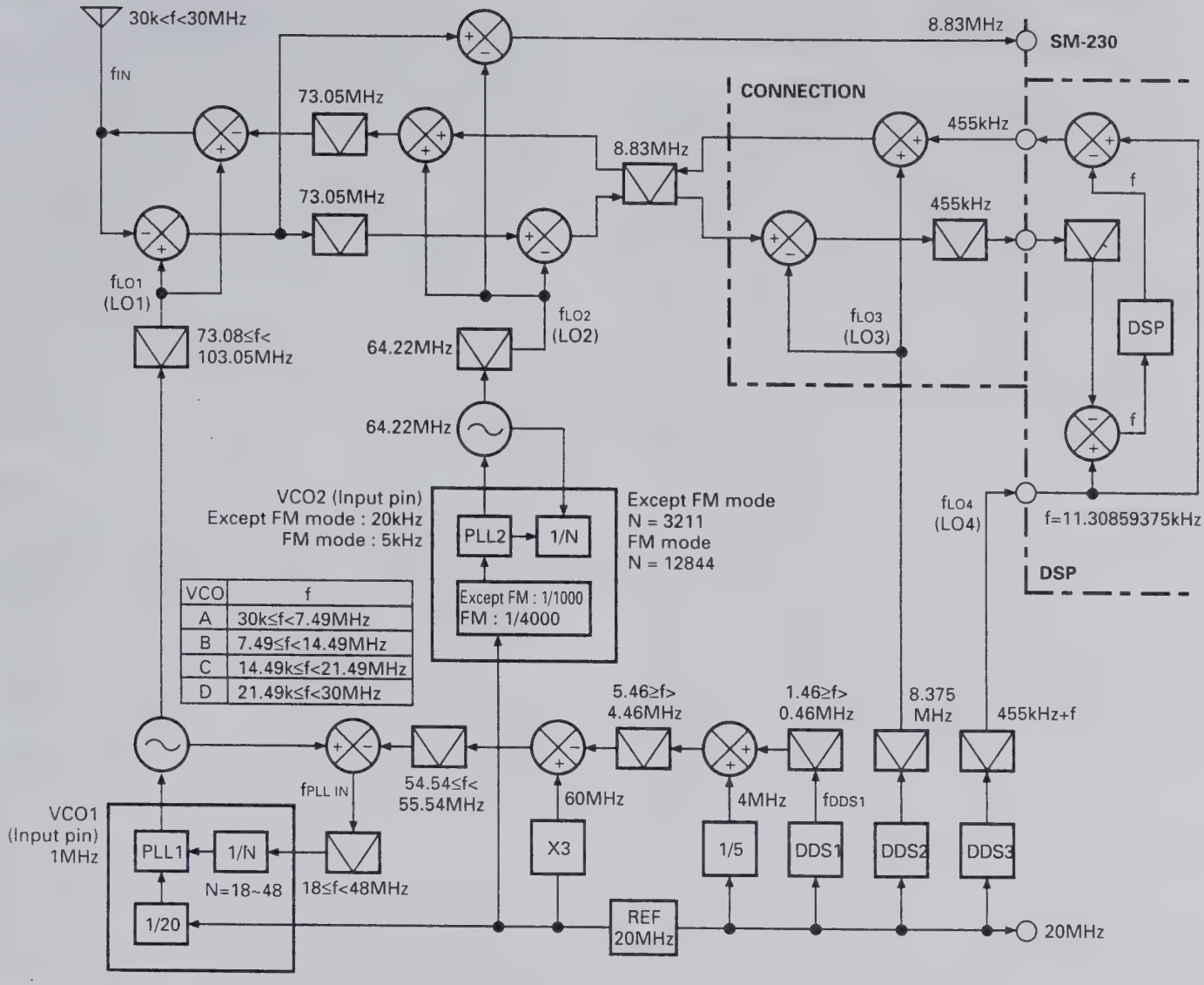

Fig. 6 Frequency configuration

CIRCUIT DESCRIPTION

Transmitter Circuit

The transmitter system block diagram is shown in Figure 7.

The TS-870S has the same frequency configuration as the TS-850 after the DSP generates the IF signal and converts it to 455kHz as a basic configuration.

A difference from the conventional model other than DSP modulation is that the TS-870S uses a digital-to-analog converter and a microcomputer for various controls. This allows for fine control and reduces the number of controls needed for adjustment.

The TIF (second IF) signal output from the TX-RX unit goes to the final unit (C/5 connection section). The signal is converted from 455kHz to 8.83MHz. The 8.83MHz third IF signal converted by the Q470 and Q471: 3SK131(M) mixer is switched to the transmitter by the D450 diode switch, and output from CN412 to the RF unit (A/9 RF section) as TR88 signal.

The signal input to CN10 of the RF unit is passed through the 8.83MHz IF filter used for both transmission and reception. During transmission, XF3 BW: 5kHz is selected by D69 and D67 and the filter attenuates the components outside the band. The transmit signal switched by D68 is amplified and ALC-controlled by the Q39 ALC amplifier, and the resulting signal goes to the D49 TX gain control circuit. This circuit controls the gain at the transmission stage according to the given voltage via a variable attenuator of a pin diode. The control voltage is controlled by a microprocessor, and is used to set the gain for each band or set the gain with the PWR knob and mode.

The third IF signal is then converted to the 73.05MHz fourth IF signal by the Q37 and Q38 : 3SK131(M) mixer. The signal is passed through the LC filter, and is converted to the target frequency by the final local oscillator LO1 at the Q35 and Q36 : 3SK184(R) mixer. The signal is passed through the radiation filter and the band-pass filter used by both the transmitter and receiver sections to attenuate the spurious outside the band. The band-pass filter output is amplified by Q5 : 2SC2954, and output to the final unit (A/5 final section) from CN4 as the drive signal.

■ TX-AGC

The DSP controls the input level until it starts modulation. It is like AGC applied to the microphone amplifier, and when the input level exceeds the certain level, the amplifier gain decreases to keep the modulator input level constant, i.e., to keep the IF output constant.

The MIC gain control in SSB and AM modes is used to adjust the maximum gain of the AGC amplifier in the 40dB range. Even if the control is set maximum, the input level to the modulator is kept constant. If the PROC is OFF in SSB mode, the CAR level (TIF output level) is fixed, and the ALC effect is limited. If the PROC is ON in SSB mode, the ALC effect is adjusted by the CAR control. The microphone amplifier gain is fixed, but the speech processor input level is controlled by the AGC and then becomes the level set by the PROC control.

In FM mode, the microphone amplifier sensitivity can be changed to high or low by using Menu No.61. Since the frequency deviation is limited by the TX-AGC, it is not distorted extremely like in the clipper method. In AM mode, the sensitivity is controlled so that modulation does not exceed 70%.

The TX-AGC is required to stabilize the DSP modulator operation. The modulator may operate without using the AGC by reduction of the gain and input level, but it cannot be completely turned OFF. Care must therefore be taken when measuring the ALC properties and frequency characteristics.

CIRCUIT DESCRIPTION

AT Unit (Auto Antenna Tuner)

When the AUTO/THROUGH switch is set to AUTO, ATA goes LOW, the AUTO/THROUGH switching relay K1 is executed, and AT is inserted to prepare for tuning. If "RX AT ON" is set in menu No.8, AT is inserted during reception. If the position of variable capacitor VC1 or VC2 is not the preset position of the band, presetting is performed. The AT tune and transmission do not occur until presetting ends.

When AT TUNE is turned on with this condition, ATS goes HIGH, the CW mode is set, and the transmission output becomes about 10W. If the SWR is lower than 1.2, the tuning is completed and auto antenna tuning ends. If the SWR is greater than 1.2, the motor control pulse duty (described later) is controlled according to the SWR.

The SWR can be set to 1.6 after AT tuning by turning menu No. 33 "TUNE WIDE" ON.

The motor speed is determined by a microcomputer. Its direction is controlled by phase comparator IC1 and amplitude comparator IC6 if the APRE is LOW, and controlled by the microcomputer if the APRE is HIGH.

■ Auto tuning mode

The transmission power from the final section via the filter section is passed through the current/voltage detection transformer L1 and L2, which use a troidal core. The current and voltage components detected here are rectified by the waveform rectification circuit consisting of D4, D7, Q1, and Q2, and then the phase is compared by IC1. The output signals ($\bar{Q}$ and Q) from pins 8 and 9 of IC1 are passed through the switch by IC2 and are applied to motor drive IC IC4. Variable capacitor VC1 is rotated by the motor M1 so that the phase difference of the voltage and current components decreases.

The voltage and current components detected by L1 and L2 are rectified by diodes D1 and D2 and are applied to the comparator of voltage comparison circuit IC6 as the amplitude component. The comparator output is passed through switch IC3. Motor M2 is driven by another motor drive IC IC5 and variable capacitor VC2 is rotated in the direction that decreases the amplitude difference of the voltage and current components.

Variable capacitor VC1 for capacity adjustment is therefore controlled so that the current and voltage phases match. Variable capacitor VC2 for resistance adjustment is controlled so that the current and voltage amplitude difference decreases. SWR becomes 1 when the phases match and the amplitude difference is zero.

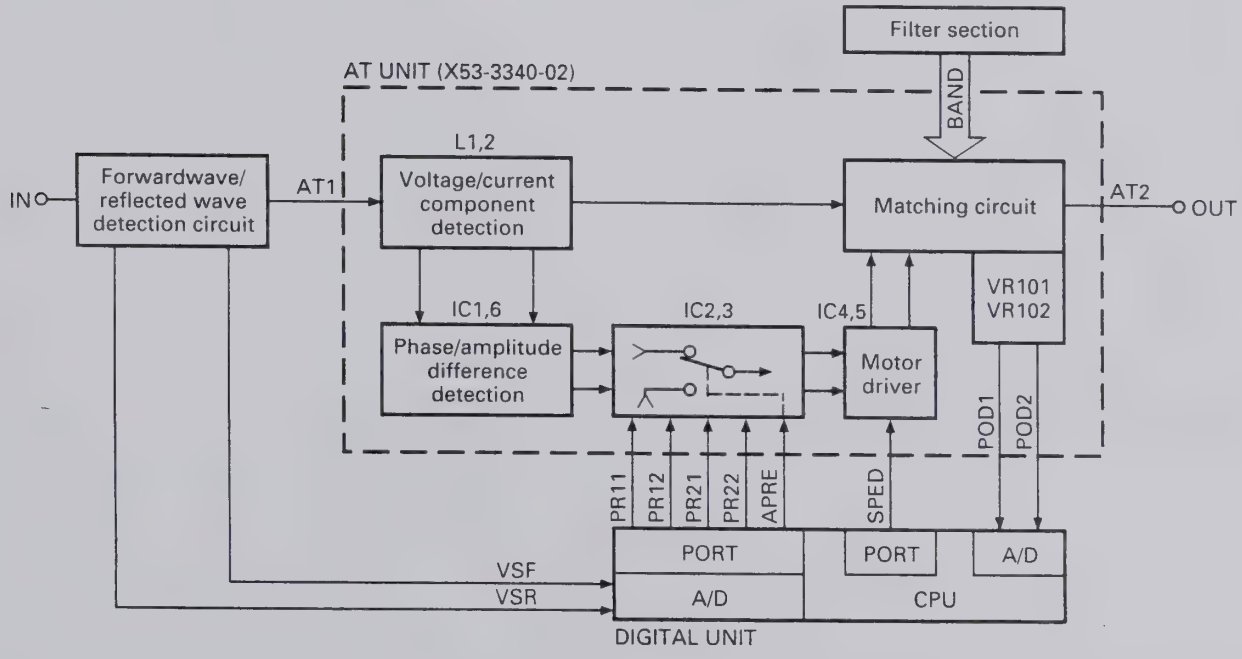

Fig. 9 AT unit block diagram

CIRCUIT DESCRIPTION

The speeds of motors M1 and M2 are determined by the duty cycle of the pulse input to control input pin 8 of IC4 and IC5, and controlled by the standing wave ratio (SWR) calculated by the control unit CPU.

Pulse signal SPED output from the control unit is passed through Q5 : DTC114EK, amplified by Q4, and input to IC4 and IC5 as a control pulse.

If the SWR is 2 or more, the duty cycle of the motor drive voltage pulse is 100%. If the SWR is 1.5 to 2, the duty cycle becomes approx. 80%. If the SWR is less than 1.5, the duty ratio becomes approx. 50% and the motor runs at low speed.

The matching circuit is T type, and the tap position from 1.8 to 30MHz is switched by seven relays K101 to K103 and K105 to K108.

Position detection volumes VR101 and VR102 are linked to the rotation axes of variable capacitors VC1 and VC2 with a gear ratio of 1 : 1. The voltages of 0 to 5V (POD1 and POD2) are generated according to the capacities of the variable capacitors. This position voltage data is sent to the microprocessor in the control unit through the analog to digital converter, and is used as the reference voltage in the feedback control system, such as for preset tuning. The same signal is also used for presetting data and end-detection.

The volume used by the TS-870S is a normal one, not an endless one. Since the rotation angle of this volume is limited, the rotation range is from the minimum capacity to the maximum capacity plus allowance.

By this control, like the preset tuning, which will be described later, POD1 and POD2 are monitored by the microprocessor. If the lower limit voltage of 0.6V or the upper limit voltage of 4.2V is reached, the microprocessor detects that the voltage is close to a limit. To return the voltage to the opposite side, APRE is made HIGH. If the variable capacitor is VC1, and the voltage is close to the lower limit in respect to POD1, the voltage near the upper limit is output. If the voltage is close to the upper limit in respect to POD1, the voltage near the lower limit is output.

The other variable capacitor VC2 outputs the voltage read by POD2 as it is. If the variable capacitor voltage exceeds the specified limit, it returns to the other limit. The other variable capacitor remains in the same position.

If the APRE is HIGH, the motor rotation direction is determined by the CPU unless auto tuning is performed.

The logic for PR11 to PR22 is the same as for IC4 and IC5 : BA6109U2. The signal output from the digital unit passes through IC2 and IC3 : TC4066BP and enters IC4 and IC5.

		PR11	PR12	PR21	PR22
Motor 1	Normal rotation	H	L	–	–
	Reverse rotation	L	H	–	–
Motor 2	Normal rotation	–	–	H	L
	Reverse rotation	–	–	L	H

■ Preset tuning

When tuning ends, the position of the variable capacitor is stored in memory by the microprocessor as preset data for that band.

When the band is changed after tuning is performed in another band, APRE goes HIGH, the motor is controlled by the microprocessor, and preset tuning is performed. During preset tuning, auto tuning or signal transmission is inhibited even if the AT TUNE switch is pressed or transmission becomes ready.

The initial preset-data when the microprocessor is reset includes standard data for a 50-ohm load on each band.

■ Preset memory band

30kHz ≤ f
1.850MHz ≤ f
2.010MHz ≤ f
3.525MHz ≤ f
3.575MHz ≤ f
3.725MHz ≤ f
4.490MHz ≤ f
7.030MHz ≤ f
7.100MHz ≤ f
7.490MHz ≤ f
10.490MHz ≤ f
14.100MHz ≤ f
14.490MHz ≤ f
20.990MHz ≤ f
21.150MHz ≤ f
21.990MHz ≤ f
25.490MHz ≤ f
29.000MHz ≤ f

CIRCUIT DESCRIPTION

Standby Control and Timing

Standby control and timing are carried out by using software for the main CPU in the control unit (X53-356X-XX). The control signals for the control unit are listed below. (See Figure 10 for each timing chart.)

SS : Standby switch input signal. Active LOW.
KEY : Keying input signal from the keyer. Active LOW.
TXC : Transmission output signal. Active HIGH. Same timing as TXB.
RXC : Reception output signal. Active HIGH. Same timing as RXB.
CKY : Output signal. Active HIGH.

With the SS line

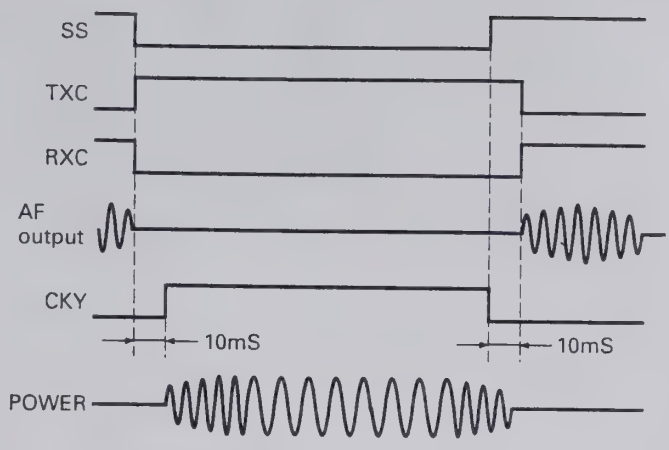

By full break-in

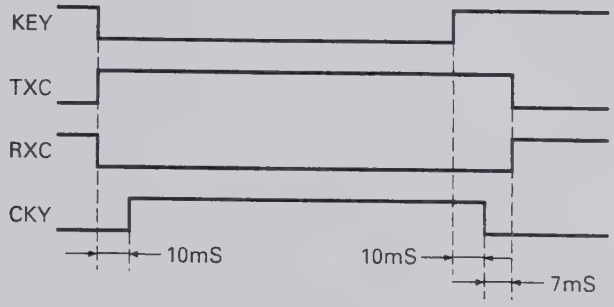

by semi break-in

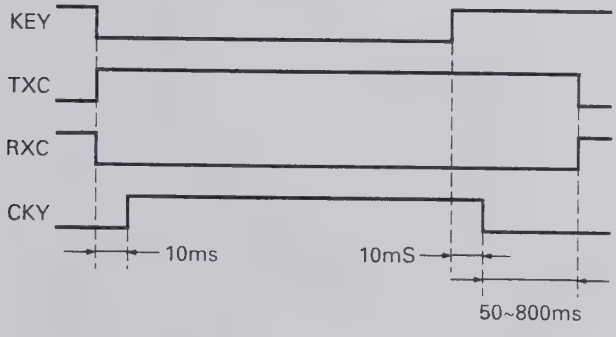

Fig. 10 Transmit/receive signal timing chart

CIRCUIT DESCRIPTION

Digital Control Unit

The TS-870S digital control circuit has a multiple chip configuration centered around the main CPU (IC6 : M37702S4BFP), and consists of a 64K ROM (IC12 : 27C512RJLVC), an 8K RAM (IC8 : LC3564QME-10), and an extended I/O (IC16, IC22, IC23 : CXD1095Q). This circuit controls about 60 different input and about 80 different output signals.

Figure 11 is a digital control block diagram.

■ Address control

The main CPU operates in the microprocessor mode in which the external ROM is used. The memory is configured as shown in the memory map, and the main CPU A12 to A15 and D0 signals and IC14, IC17, IC18, and IC19 are used to generate a chip select (CS) signal to select and access an IC. (Figure 12)

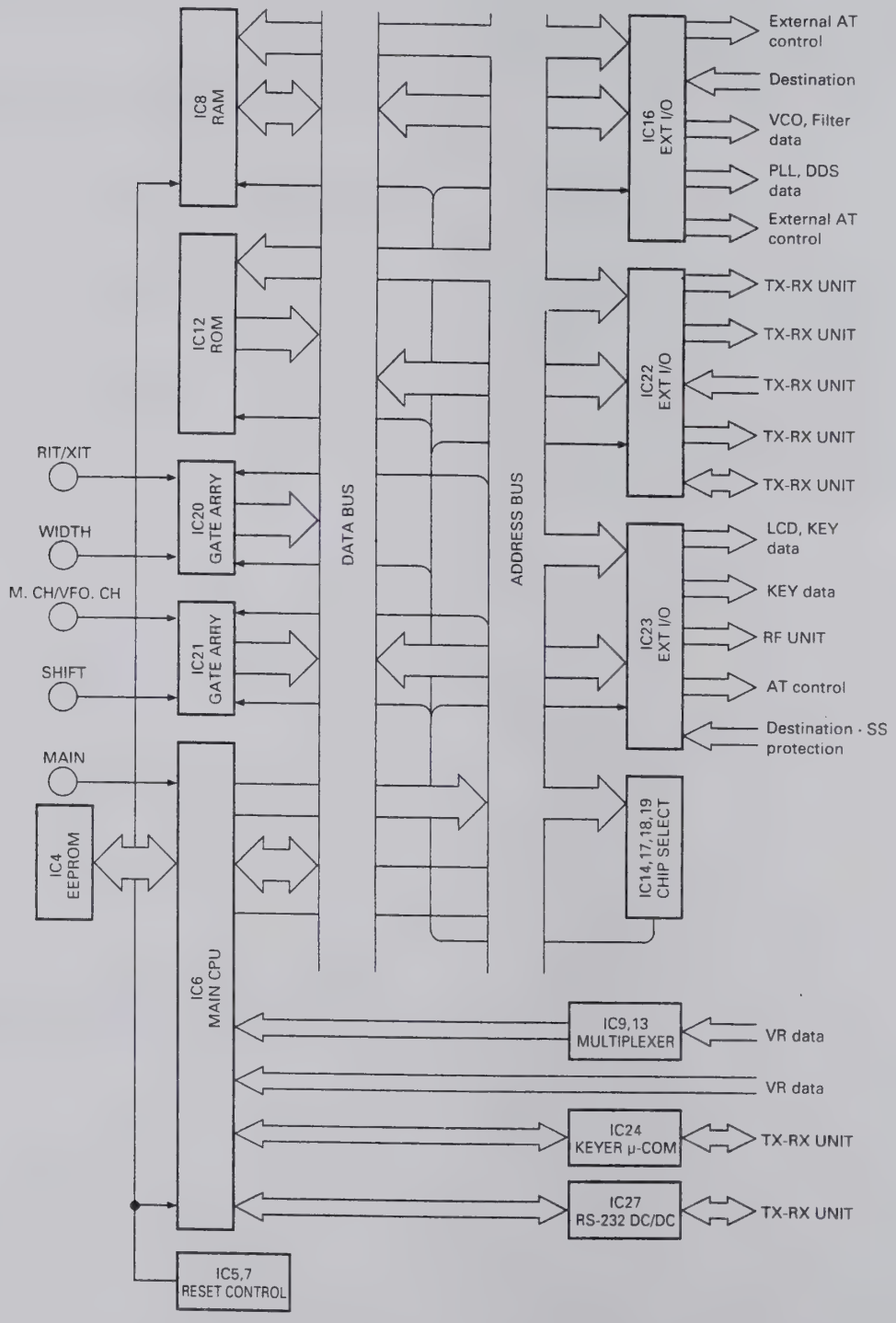

Fig. 11 Digital control block diagram

CIRCUIT DESCRIPTION

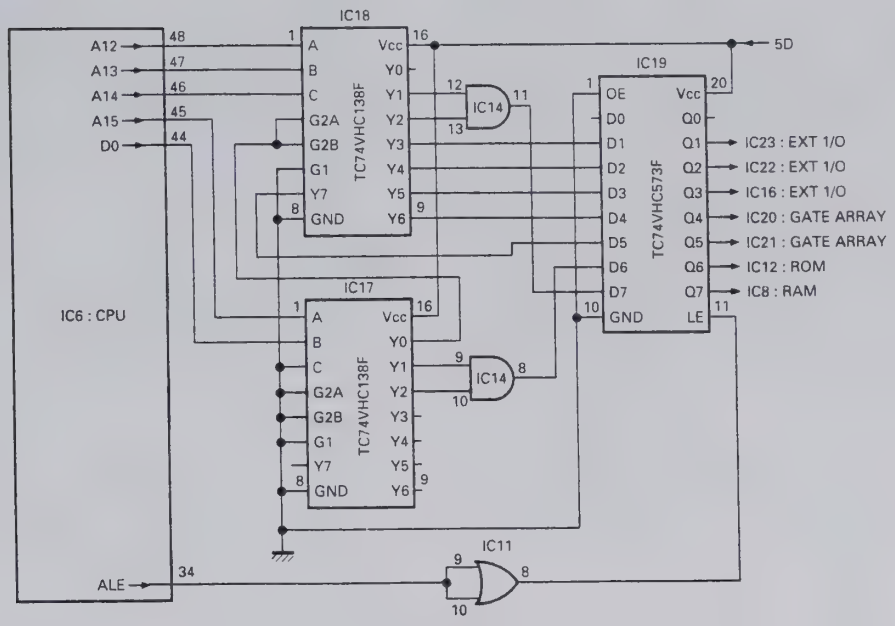

Fig. 12 Address control circuit

■ Encoder circuit

The main encoders are magnetic rotary encoders, and the click, RIT, SHIFT, and WIDTH encoders are contact-type rotary encoders.

The main encoder pulses are read directly by the main CPU.

The other encoder pulses enter the gate array (IC20 and IC21 : LZ92K371), and are read through the main CPU data bus. The gate array is selected by the latch (IC19 : TC74VHC573F) Q4 and Q5. The CK1, CK2 or CK3, CK4 encoder is selected by A0 of the gate array. Encoder data is output to D0 to D7 by making the read signal (RD) LOW when the chip select (CS) signal is LOW. IC25 and IC26 absorb encoder pulse chattering. (Figure 13)

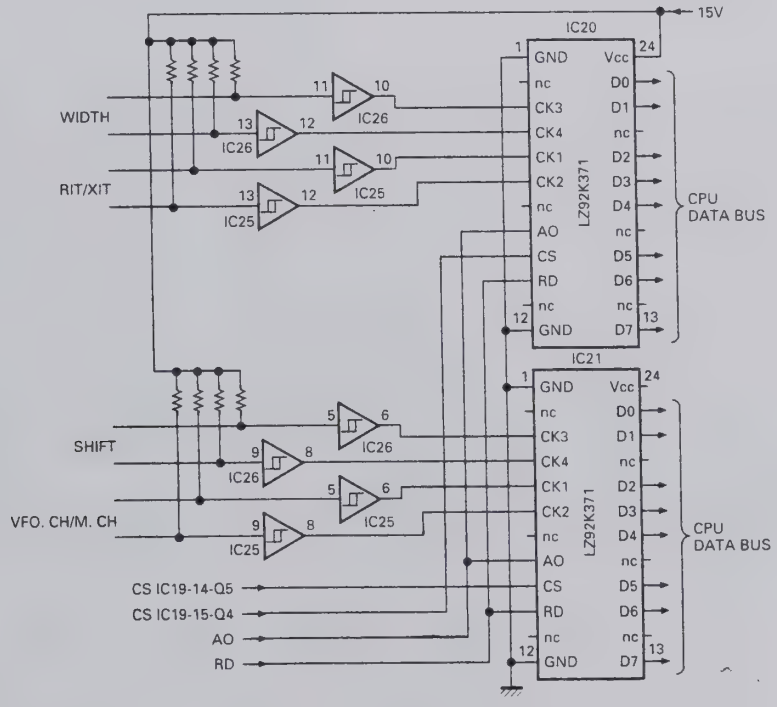

Fig. 13 Encoder circuit

CIRCUIT DESCRIPTION

■ System reset and RAM backup

The power monitor circuit (Q1, Q2, D4, D5, R6) monitors the power supply voltage. If the voltage is LOW, the circuit outputs a LOW signal to the INT1 port of the main CPU and the IRQ2 port of the microprocessor in order for the electronic keyer to stop operation. At the same time, the battery backup IC (IC5 : MB3780A) backs up the RAM with a lithium battery.

If the power supply voltage becomes normal, a HIGH signal is input to the INT1 port and the IRQ2 port, and the main CPU is initialized by the battery backup IC after the time constant set by C56 and C57. The operation resumes and power is supplied to the RAM from the outlet. (Figure 14)

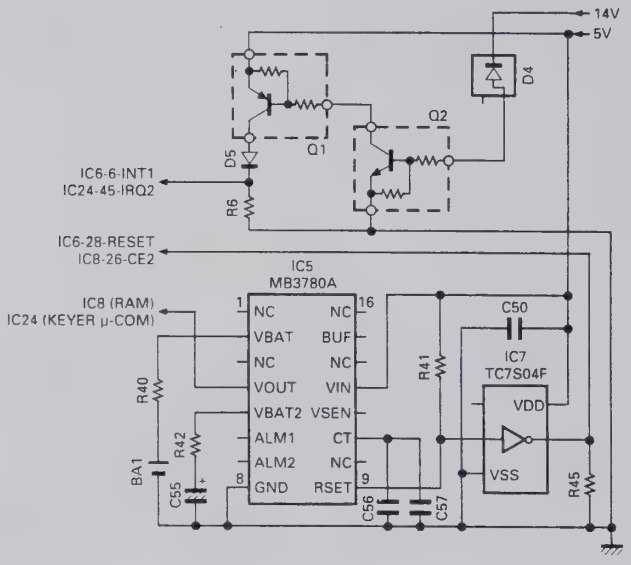

Fig. 14 System reset and RAM backup

■ Analog Signal Input

The main CPU incorporates an 8-channel analog-to-digital (A/D) converter, and in addition, has a multiplexer (IC9 and IC13 : TC4052BF) for entering 16-channel analog signals. Incoming analog signals are converted by the main CPU to digital values, which are used as digital data.

■ Display

Since the TS-870S uses a negative LCD and a fluorescent display tube.

The LCD is lighted with half a duty by the LCD driver, and the fluorescent display tube is lighted by an inverter.

The LCD driver data is set by the clock signal (UCK1), data signal (UDA1), and enable signals (ENL2, ENL3). The blanking signal (BLANK) turns the LCD driver OFF, and the dimmer signal (DIM) changes the inverter duty for dimmer.

■ Key scan

The PB0 and PB7 of IC23 and O2 to O8 of IC501 form a keyboard matrix. A key scan signal (a negative pulse) is output from the O2 to O8. One column corresponding to the PB0 and PB7 is selected, and the state of that switch is read. When the switch at the intersection of the matrix is pressed, the PBx port bit goes LOW. Thus, which switch is pressed can be detected. The key chattering is eliminated by software. (Figure 15)

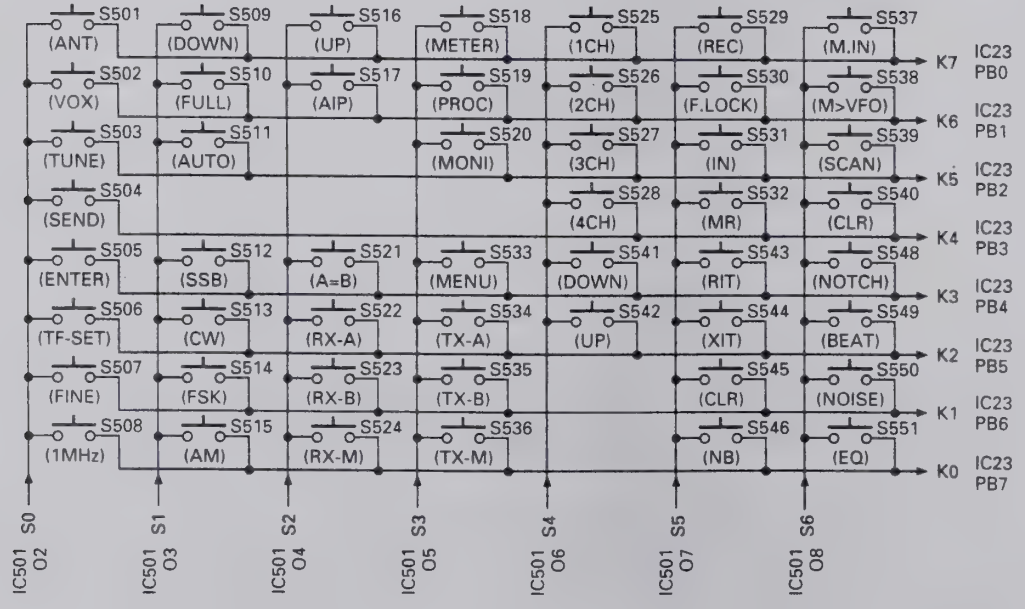

Fig. 15 Key scan circuit

CIRCUIT DESCRIPTION

■ PLL and DDS data

The TS-870S has three PLLs and three DDSs in the PLL section in the RF unit. The main CPU sends data to the PLL ICs and DDS ICs according to the displayed frequency. The PLL ICs provide unlock (UNL) signals. If one of the PLLs should unlock, the display indicates that the PLL is unlocked (Err-FE).

The TX-RX unit also has a PLL IC, to which the main CPU sends 46.32MHz data. The PLL IC also outputs an unlock signal (PLUL), and if a PLL is unlocked, an unlock message (Err-FD) is displayed.

■ AT control

The AT control inputs the variable capacitor position data (POD1, POD2, analog data input), forward wave voltage and reflected wave voltage (VSF, VSR, analog data input) for SWR calculation in the main CPU, and outputs the motor normal/reverse rotation control (PR11, PR12, PR21, PR22), motor speed control signal (SPED), and motor control switching signal (APRE).

SPED switches the motor rotation ON and OFF during AT tune and presetting by PWM with the duty cycle related to the SWR value.

APRE changes the motor normal/reverse rotation control to analog control for AT tune, and to digital control for presetting.

PR11 to PR22 control the motor normal/reverse rotations and stop when the motor normal/reverse control signal is controlled digitally. (Figure 16)

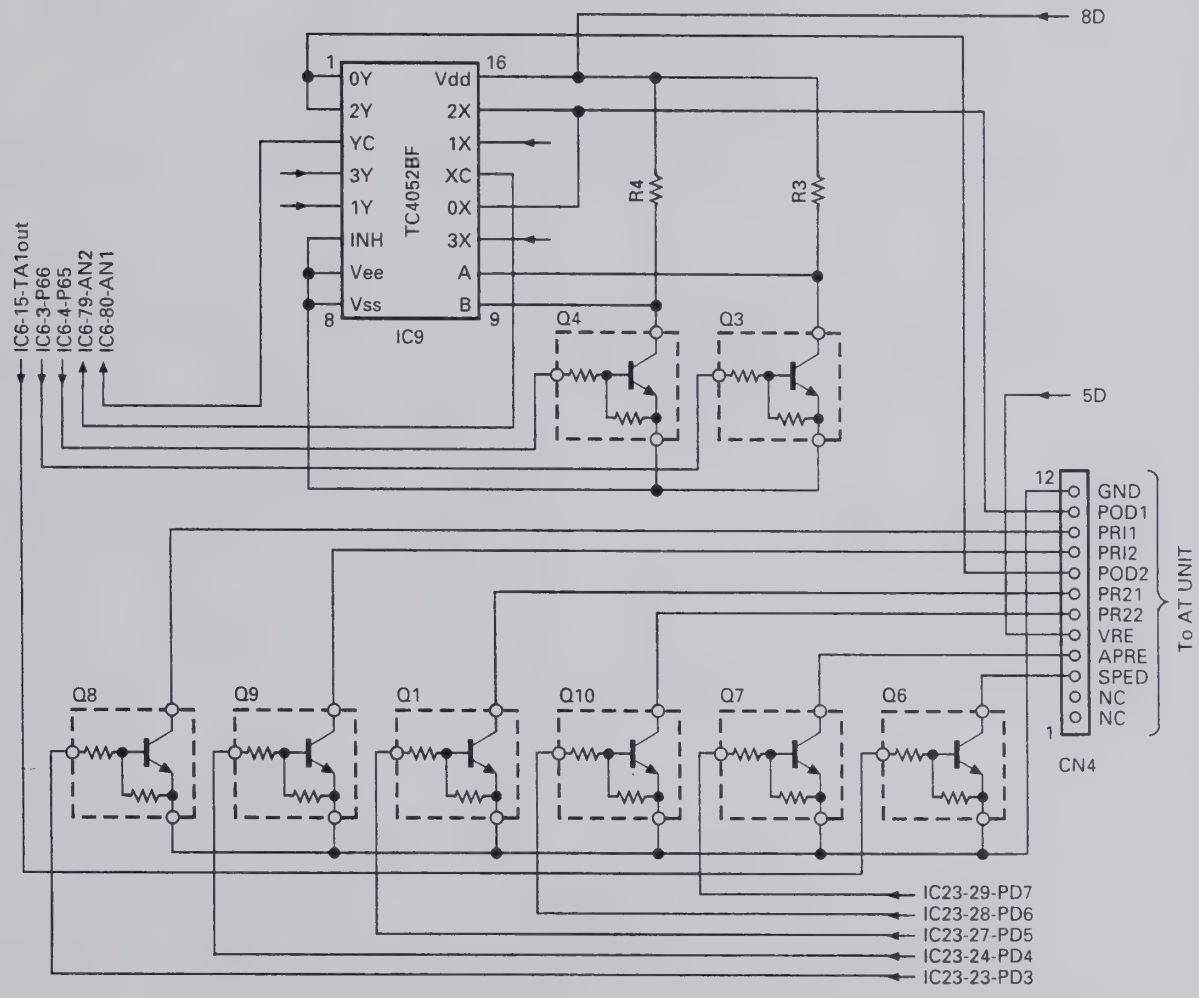

Fig. 16 AT control

CIRCUIT DESCRIPTION

■ IF filter switching

The IF filter switching signal from the control unit is controlled by PC0 to PC2 (pins 11 to 13) of IC23 and sent to the RF unit and final unit connection section.

The RF unit selects the 8.83MHz IF filter, and the final unit connection section selects the 455kHz IF filter.

The IF filter select signal is automatically interlocked with the WIDTH control.

SSB		CW		FSK		AM		FM	
WIDTH	IF FILTER	WIDTH	IF FILTER	WIDTH	IF FILTER	WIDTH	IF FILTER	WIDTH	IF FILTER
1.4k	3k	50	3k	250	3k	5.0k	6k	5.0k	15k
1.6k	↑	200	↑	500	↑	6.0k	15k	6.0k	↑
1.8k	↑	300	↑	1.0k	↑	8.0k	↑	8.0k	↑
2.0k	↑	400	↑	1.5k	↑	10.0k	↑	10.0k	↑
2.2k	↑	600	↑			12.0k	↑	12.0k	↑
2.4k	↑	1.0k	↑			14.0k	↑	14.0k	↑
2.6k	6k								
2.8k	↑								
3.0k	↑								
3.2k	↑								
3.4k	↑								
4.6k	↑								
6.0k	15k								

Table 9 IF filter selection

■ Receive band-pass filter selection

The RF BPF signal from the control unit is sent from PC6 (pin 17) of IC23 to the RF unit as serial data. The serial-to-parallel converter (TC9174F) in the RF unit converts serial data to parallel data and switches between band-pass filters.

■ Transmit low-pass filter selection

The LPF signal from the control unit is sent as serial data from PC1 (pin 12) of IC16 to the final unit filter section via the final unit connection section. The serial-to-parallel converter (TC9174F) in the final unit filter section converts serial data to parallel data and switches between low-pass filters.

■ PLL VCO data

The RF unit PLL section switches between VCOs according to the VCO band data (VB0 to VB3) output from PC4 to PC7 (pins 15 to 18) of IC16 in the control unit.

■ Electronic keyer

The TS-870S uses a dedicated IC (IC24 : 68HC05G2419553) to control the electronic keyer. The main CPU CH1 to CH4 signals switch operations to the electronic keyer IC (keyer microprocessor).

The keyer microprocessor controls the electronic keyer according to KEY SPEED VR data, DOT/DASH signal, and CH1 to CH4 signals switch operation signals from the main CPU.

The keyer microprocessor is normally at the standby mode (power save mode). Each control signal is connected to PB7 (pin 77). When this port is LOW, the standby mode is terminated.

When the standby mode is cancelled, PA7 (pin 30) outputs a HIGH signal. It is used to determine which control signal is active : CH1 to CH4, KEY SPEED VR data, or DOT/DASH signal.

PA2 (pin 25) is an input/output port that inputs KEY SPEED VR data and outputs control signal (HIGH) for VR data determination.

When a HIGH signal is output from PA2 (pin 25), C114 is charged. KEY SPEED VR data is calculated until C114 is discharged and the port goes LOW.

IRQ2 (pin 41) is an interrupt port that detects power supply voltage drop. When this port detects it, the standby mode is entered.

The keyer microprocessor outputs the key down and beep signals. The key down signal is input to IC22 (PC4 : pin 15), and the main CPU controls transmission and reception. The beep signal is input to IC29 (TC7S32F : OR gate) and output to the TX-RX unit as CKY.

The TX-RX unit determines the key jack ON/OFF and CKY level and outputs sidetone.

CIRCUIT DESCRIPTION

■ Band data

Frequency (MHz)		RF BPF (RB)		LPF	VCO				PLL
Lower limit	Upper limit	RX	TX		A	B	C	D	N
0.01	0.49	1	1	1	1	0	0	0	38
0.49	0.99	2	2						38
0.99	1.705								37
1.705	2.01	3	3						37
2.01	2.49			2					36
2.49	2.99	4	4						36
2.99	3.49								35
3.49	3.99								35
3.99	4.49	5	5						34
4.49	4.99			3					34
4.99	5.49								33
5.49	5.99								33
5.99	6.49								32
6.49	6.99								32
6.99	7.3	6	6						31
7.3	7.49	7	7						31
7.49	7.99			4	0	1	0	0	31
7.99	8.49								30
8.49	8.99								30
8.99	9.49								29
9.49	9.99								29
9.99	10.49								28
10.49	10.99	8	8	5					28
10.99	11.49								27
11.49	11.99								27
11.99	12.49								26
12.49	12.99								26
12.99	13.49								25
13.49	13.99								25
13.99	14.35	9	9						24
14.35	14.49	10	10						24
14.49	14.99			6	0	0	1	0	24
14.49	15.49								23
15.49	15.99	10	10	6	0	0	1	0	23
15.99	16.49								22
16.49	16.99								22
16.99	17.49								21
17.49	17.99								21
17.99	18.49								20
18.49	18.99								20
18.99	19.49								19
19.49	19.99								19
19.99	20.49								18
20.49	20.99								18
20.99	21.49	11	11						17
21.49	21.99	12	12		0	0	0	1	17
21.99	22.49			7					16
22.49	22.99								16
22.99	23.49								15
23.49	23.99								15
23.99	24.49								14
24.49	24.99								14
24.99	25.49								13
25.49	25.99			8					13
25.99	26.49								12
26.49	26.99								12
26.99	27.49								11
27.49	27.99								11
27.99	28.49								10
28.49	28.99								10
28.99	29.49								9
29.29	29.99								9
29.99	30								9

CIRCUIT DESCRIPTION

■ Function of IC pins

1) CPU : M37702S4BFP (Control unit IC6)

Pin No.	Port name	Pin name	I/O	Function	Active level	Initial state
1	AN0	ADR0	I	VPRC, VMON, VAGC signal		
2	P67	RES	O	Reset signal output	L	H
3, 4	P66, P65	CTB, CTA	O	Analog switch select control signal B, A	H	H
5	INT2	PSW	I	Power switch inhibit signal	H	
6	INT1	BOVR	I	14V voltage drop inhibit signal		
7	INT0		I	Unused		
8, 9	TA4IN, TA4OUT	EDP1, EDP2	I	Main encoder pulse input		
10, 11	TA3IN, TA3OUT		O	Unused		L
12, 13	TA2IN, TA2OUT		O	Unused		L
14	P53	AMUT	I	AF mute signal	L	H
15	TA1OUT	SPED	O	AT motor speed control	L	H
16	P51	LCD	O	LCD and LED serial data		H
17	P50	LCK	O	LCD and LED serial clock		H
18	P47	BLK	O	LCD all off control signal	H	L
19	P46	RBK	O	RF mute signal	L	L
20	P45	14VSW	O	Power on control signal	H	H
21	P44	ECS	O	EEPROM clock		H
22	P43	EED	I/O	EEPROM data		
23	PHI			Unused		
24	RDY		I	Bus wait cancel	H	
25	HORD		I	Hold state cancel	H	
26	BYTE		I	External data bus width 8 bit setting	H	
27	CNVss		I			
28	RESET		I	Reset signal input	L	
29, 30	Xin, Xout		I	Clock signal input		
31	E		O			
32	Vss		I			
33	HLDA					
34	ALE		O			
35	BHE					
36	R/W		O	Read/write signal		
37~44	D7~D0		I/O	Bus		
45~60	A15~A0		O	Address output		
61~64	P87~P84	PB0~PB3	O	Logic key CPU control 0~3	H	L
65	TXD0	TXD0	O	Personal computer interface serial output		H
66	RXD0	RXD0	I	Personal computer interface serial input		
67	P81	RTS0	O	Personal computer interface RTS	H	L
68	CTS0	CTS0	I	Personal computer interface CTS		
69	Vcc		I			
70	AVcc		I			
71	Vref		I			
72	AVss		I			
73	Vss		I			
74	AN7	ADR7	I	Forward wave voltage (VSF)		
75	AN6	ADR6	I	Reflected wave voltage (VSR)		
76	AN5	ADR5	I	ALC meter analog input		
77	AN4		I	Unused		
78	AN3	ADR3	I	VPWR, VMIC, VDLY, VCAR signal		
79	AN2	ADR2	I	POD2, VRF, POD2, VAF signal		
80	AN1	ADR1	I	POD1, VNB, POD1, VSQL signal		

CIRCUIT DESCRIPTION

2) CPU : 68HC05G2419553 (Control unit IC24)

Pin No.	Port name	Pin name	I/O	Function	Active level	Initial state
1	VDD		I			
2~5	PB3~PB0		I	CH4 to CH1 switch input signal from IC6		
6~13	AD0~AD7		I	Unused		
14	VrefH			Unconnected		
15	VrefL		I			
16	Vss		I			
17	VDD		I			
18, 19	XOSC1, XOSC2		I	Unconnected		
20	RES		I	Reset signal input		
21, 22	OSC1, OSC2		I	Clock input		
23	PA0	DOT	I	DOT input		
24	PA1	DASH	I	Dash input		
25	PA2	SPEED VR	I/O	KEY VR data determine port		
26~29	PA3~PA6		I	Unused		
30	PA7	int contro	O	Inhibit determine control signal	H	
31~33	PG0~PG2		I	Unused		
34	TCMP		I	Unconnected		
35	PG4		I	Unused		
36	PG5	EBSY	I	Unused		
37	PG6	MBSY	I	Unused		
38	PG7		I	Unused		
39~44	PC0~PC5		I	Unused		
45	IRQ2	sleep	I	14V voltage drop determine inhibit port		
46	PC7		I	Unused		
47	VDD		I			
48	PD0		I	Unused		
49	PD1	mbusy	O	Message busy signal		
50	PD2		I	Unused		
51	PD3	pbc	O	Beep output signal		
52	PD4		I	Unused		
53	PD5	KEY	O	Key signal output		
54	PD6		I	Unused		
55	PD7		I	Unconnected		
56~59	PE0~PE3		I	Unused		
60	Vss		I			
61~64	PE4~PE7		I	Unused		
65~72	PH0~PH7		I	Unused		
73~76	PJ0~PJ3		I	Unused		
77	PB7	WAKE UP	I	Wake up inhibit		
78~80	PB6~PB4		I	Unused		

CIRCUIT DESCRIPTION

3) Extended I/O : CXD1095Q (Control unit IC16)

Pin No.	Port name	Pin name	I/O	Function	Active level	Initial state
1, 2	NC					
3~7	PB1~PB5	SHIMO1~SHIMO5	I	Destination determine port	H	
8	PB6	50W	I	50W switch signal	L	
9	PB7	UNL	I	Unlock signal	H	
10	Vss		I			
11	PC0	ENF1	O	Serial/parallel convert enable	H	L
12	PC1	UDA23	O	Serial/parallel convert data		L
13	PC2	UCK23	O	Serial/parallel convert clock		L
14	PC3	NFMT	O	Control signal except FM transmit mode	L	H
15, 16	PC4, PC5	VB3, VB2	O	VCO band data	H	L
17	PC6	VB1	O	VCO band data	H	H
18	PC7	VB0	O	VCO band data	H	L
19	NC					
20	PD0	PLE2	O	VCO2 enable	H	L
21	PD1	PLE1	O	VCO1 enable	H	L
22	PD2	PCK	O	PLL clock		L
23	PD3	PDA	O	PLL data		L
24	PD4		O	Unused		L
25	Vss		I			
26	VDD		I			
27	PD5	DLE3	O	DDS3 enable	H	L
28	PD^	DLE2	O	DDS2 enable	H	L
29	PD7	DLE1	O	DDS1 enable	H	L
30~32	D0~D2		I/O	Bus		
33, 34	NC					
35~39	D3~D7		I/O	Bus		
40	CLR		I	Port E output register clear	L	
41	ODEN		I	Output disable	L	
42	Vss		I			
43	WR		I	Write signal	L	
44	RD		I	Read signal	L	
45	CS		I	Chip select signal	L	
46~48	A0~A2		I	Address signal		
49	PE0	P TTI	I	External AT TT input	H	
50	PE1	P TSI	I	External AT TS input	H	
51	NC					
52	PE2	MBSY	I	Electronic keyer busy signal		
53	PE3		I	Unused		
54	PA0	P TTO	O	External AT TT output	H	L
55	PA1	P TSO	O	External AT TS output	H	L
56	PA2		O	Unused		L
57	Vss		I			
58	VDD		I			
59~62	PA3~PA6		O	Unused		L
63	PA7	LOGKEY	O	Electronic keyer reset	H	L
64	PB0	SHIMO0	I	Destination determine port	H	

CIRCUIT DESCRIPTION

4) Extended I/O : CXD1095Q (Control unit IC22)

Pin No.	Port name	Pin name	I/O	Function	Active level	Initial state
1, 2	NC					
3~9	PB1~PB7		I/O	DSP bus		
10	Vss		I			
11	PC0		I	Unused		
12	PC1	KEYS	I	Electronic keyer connecting determine signal	L	
13	PC2	MD	I	Microphone UP switch signal	L	
14	PC3	MU	I	Microphone DOWN switch signal	L	
15	PC4	KEYI	I	Key input signal	L	
16	PC5	PLUL	I	PLL unlock in DSP	L	
17	PC6	EOM	I	DRU-3 EOM signal	H	
18	PC7	VBSY	I	VS-2 busy signal	L	
19	NC					
20	PD0	DRST	O	DSP reset signal Normally "H"	L	H
21	PD1	VCEN	O	Electronic volume DAC enable	L	H
22	PD2	UCK22	O	Serial/parallel convert clock signal		L
23	PD3	UDA22	O	Serial/parallel convert data signal		L
24	PD4	DREN	O	DRU-3 enable signal	L	H
25	Vss		I			
26	VDD		I			
27	PD5	PLEN	O	PLL enable in DSP	H	L
28	PD6	STR	O	VS-2 start signal	H	L
29	PD7		O	Unused		L
30~32	D0~D2		I/O	Bus		
33, 34	NC					
35~39	D3~D7		I/O	Bus		
40	CLR		I	Port E output register clear	L	
41	ODEN		I	Output disable	L	
42	Vss		I			
43	WR		I	Write signal	L	
44	RD		I	Read signal	L	
45	CS		I	Chip select signal	L	
46~48	A0~A2		I	Address signal		
49	PE0	HENA	O	DSP enable A	L	H
50	PE1	HENB	O	DSP enable B	L	H
51	NC					
52	PE2	HRW	O	DSP R/W signal		H
53	PE3		O	Unused		L
54~56	PA0~PA2		O	DSP address signal		L
57	Vss		I			
58	VDD		I			
59	PA3		O	Unused		L
60	PA4	P BEEP	O	Beep output signal	H	L
61	PA5	P CKY	O	Transmit output control signal	H	L
62	PA6	P RXC	O	Receive control signal	H	H
63	PA7	P TXC	O	Transmit control signal	H	L
64	PB0		I/O	DSP bus		

CIRCUIT DESCRIPTION

5) Extended I/O : CXD1095Q (Control unit IC23)

Pin No.	Port name	Pin name	I/O	Function	Active level	Initial state
1, 2	NC					
3~9	PB1~PB7	P K1~P K7	I	Key matrix input	L	
10	Vss		I			
11	PC0	6KFIL	O	Analog filter select signal	H	L
12	PC1	3KFIL	O	Analog filter select signal	H	H
13	PC2	15KFIL	O	analog filter select signal	H	L
14~16	PC3~PC5	P ENR3~P ENR1	O	RF serial/parallel convert enable	H	L
17	PC6	P UDA21	O	Serial/parallel convert data		L
18	PC7	P UCK21	O	Serial/parallel convert clock		L
19	NC					
20~22	PD0~PD2		O	Unused		L
23	PD3	P APRE	O	AT motor control signal		L
24	PD4	P PR22	O	AT motor 2 control signal		L
25	Vss		I			
26	VDD		I			
27	PD5	P PR21	O	AT motor 2 control signal		L
28	PD6	P PR12	O	AT motor 1 control signal		L
29	PD7	P PR11	O	AT motor 1 control signal		L
30~32	D0~D2		I/O	Bus		
33, 34	NC					
35~39	D3~D7		I/O	Bus		
40	CLR		I	Port E output register clear	L	
41	ODEN		I	Output disable	L	
42	Vss		I			
43	WR		I	Write signal	L	
44	RD		I	Read signal	L	
45	CS		I	Chip select signal	L	
46~48	A0~A2		I	Address signal		
49	PE0	P THP	I	Thermal protection signal	H	
50	PE1	P SS	I	Microphone PTT switch signal	L	
51	NC					
52	PE2		I			
53	PE3		O	Unused		L
54	PA0	P DIM	O	Dimmer control signal	H	H
55, 56	PA1, PA2	P ENL3, P ENL2	O	LCD driver enable signal	H	L
57	Vss		I			
58	VDD		I			
59	PA3	P LATC	O	AT LED	H	L
60, 61	PA4, PA5	P ENL1, P ENL4	O	Switch serial/parallel convert enable	H	L
62, 63	PA6, PA7		O	Unused		L
64	PB0	P K0	I	Key matrix input	L	

CIRCUIT DESCRIPTION

TX-RX Unit (DSP Operation)

■ Outline

The TS-870S uses the DSP to carry out various processing as compared with the conventional models. They include the following:

- Modulation and demodulation
- Filter processing
- AGC processing (S-meter data output)
- Mic amplifier AGC processing
- VOX processing
- Voice equalizing processing
- Noise processing (noise reduction, beat cancel, automatic notch)
- Speech processing (COMP meter data output)
- Squelch processing
- Sidetone and beep generation

The commands and data for the microprocessor are listed below (see page 42).

The TX-RX unit circuits are divided into the analog section that processes analog signals and digital section that processes digital data. The interface between the analog and digital sections is the analog-to-digital converter (IC25 : AK5340-VS) and digital to analog converter (IC16 and IC27 : AK4318-VS, IC34 : PCM69AU).

The unit has another digital to analog converter (IC26 : M62363FP) for VCA (electronic volume : M51131L) control. The volume is controlled directly by the microprocessor in the control unit (the volume is not controlled by the DSP).

■ Digital section

The digital section is explained below. Figure 17 is a digital section block diagram.

The digital section consists of two DSPs (IC1 and IC2 : DSP56002FC40), RAM (IC7 : MCM56824AFN2*), three ROMs (IC4, IC5, IC6 : 27C256PCJJ**), and gate array (IC3 : MBCG24173-6173) and PLD (IC9 : 7032LC44JLQ*). The TX-RX unit has a PLL, but it is included in the digital section for convenience. * indicates the version number.

The PLL in the TX-RX unit is controlled directly by the microprocessor in the control unit, and clocks of a fixed frequency of 46.32MHz are generated. This circuit forms a VCO consisting of Q8 : 2SK210(GR), Q9 and Q10 : 2SC2714(Y). Q8 is an oscillator and Q9 and Q10 are buffer amplifiers. Q5, Q6, and Q7 comprise an active low-pass filter. This low-pass filter converts the output from PLL IC IC15 : MB86001PF to DC voltage and sends it to the VCO.

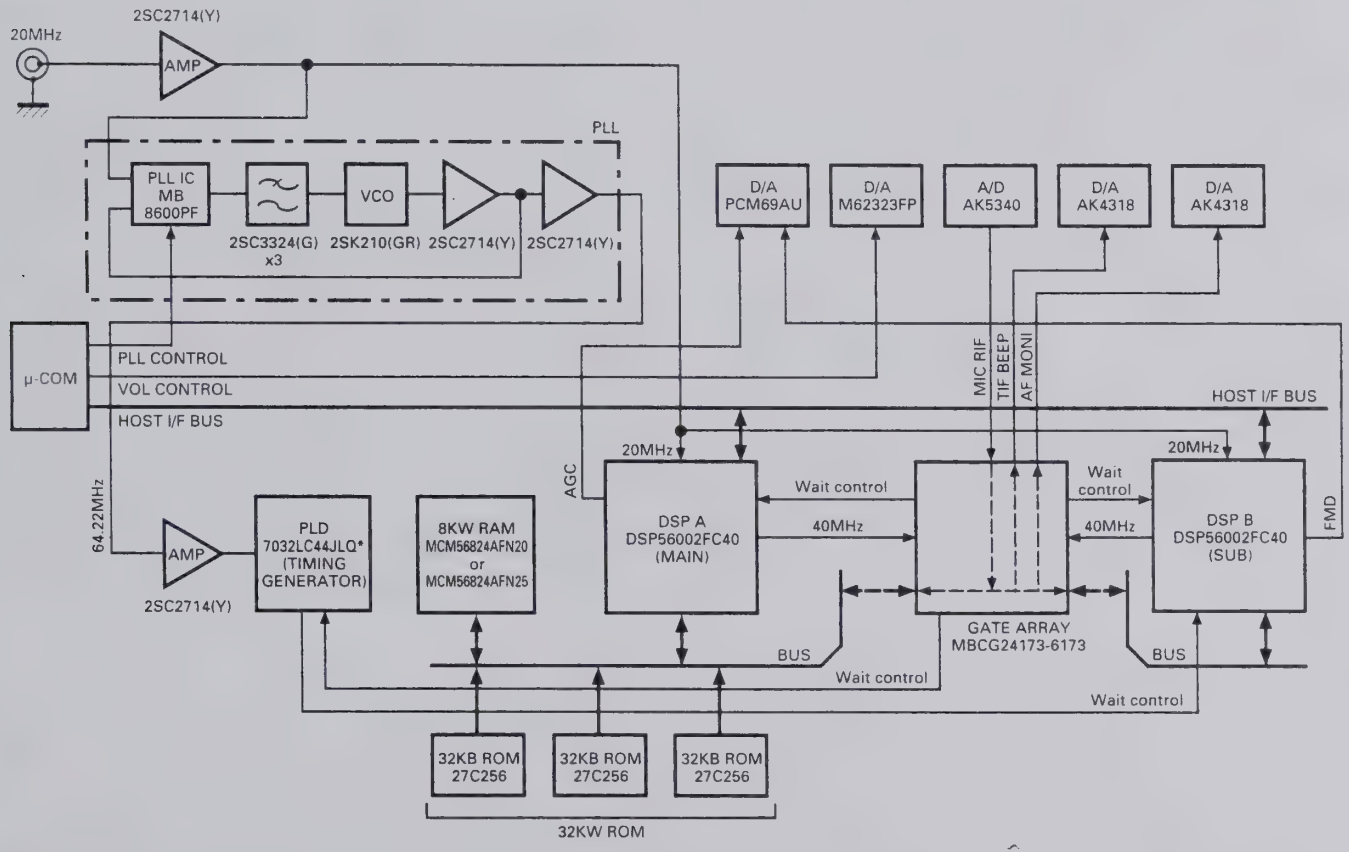

Fig. 17 Digital section block diagram

CIRCUIT DESCRIPTION

Figure 18 is a block diagram of the PLD (Programmable Logic Device). The clock with a sampling frequency fs (45.234375kHz) is generated from the 46.32MHz clock produced by the PLL in the TX-RX unit by the clock divider in the PLD. This clock is used for data transmission and reception between the analog-to-digital and digital to analog converters and gate array and data transmission and reception between the gate array, DSP, and the analog to digital and digital to analog converters. The PLD forms part of the bus control circuit for sharing the RAM and ROM with two DSPs and the circuit that accesses the ROM.

The gate array is used as the interface between the analog to digital and digital to analog converters and the DSP. Data is received from the analog to digital converter, or transmitted to the digital to analog converter, and each DSP is interrupted in the 1/fs sampling intervals. The gate array interfaces two DSPs for communication, and the two other DSPs control the bus for sharing the RAM and ROM.

The DSP has a 24 bit fixed-decimal DSP. It operates with the 40MHz clock, but the external 20MHz clock is given to the DSP. The DSP operates the 40MHz clock generated in the PLL in the IC. The clock is programmed to be output to pin 123 (CKOUT) of the DSP. Transfer of commands with the microprocessor is carried out through the host interface of the DSP.

The ROM and RAM are shared by two DSPs. When one of the DSPs is being accessed, the other DSP waits. It is carried out by the gate array and PLD. Three 8 bit ROMs are used to implement 24 bits.

The analog to digital converter (IC25 : AK5340-VS) is an 18 bit Δ-Σ type ADC for audio equipment. There are two channels, R and L. The R channel is used for the receive signal and the L channel is used for the microphone input signal. The digital to analog converter (IC16 and IC27 : AK4318-VS) is a 18 bit Δ-Σ type DAC for audio equipment. The digital to analog converter has two channels like the analog to digital converter : IC16 uses the R channel for the beep signal and the L channel for the transmit signal, and IC27 uses the R channel for the monitor signal and the L channel for the decode signal. Another digital to analog converter (IC34 : PCM69AU) is an 18 bit DAC for audio equipment, and uses the Rch for AGC and the L channel for audio signals in FM.

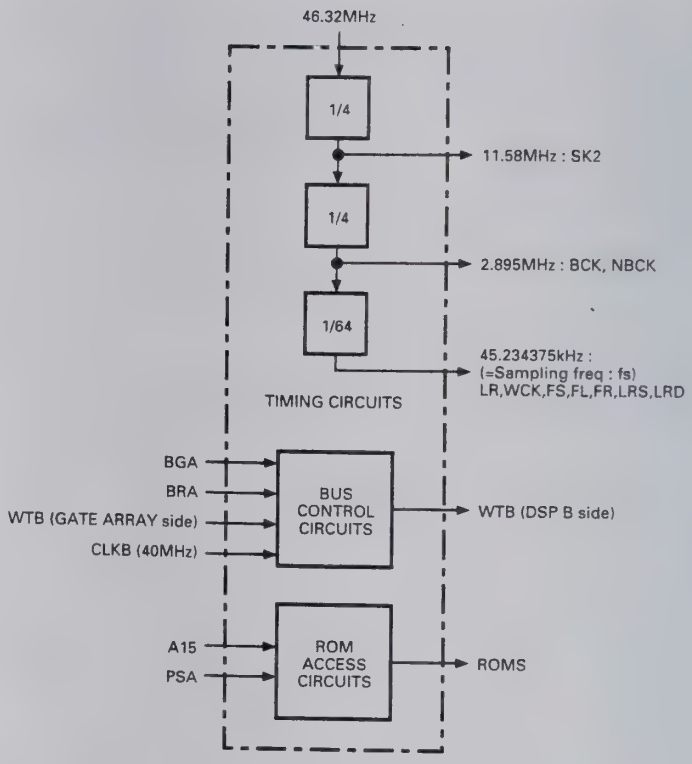

Fig. 18 PLD block diagram

■ Flow of transmit/receive signals

Flow of transmit/receive signals is explained below, together with the analog and digital sections. Flow of receive signals is explained first. See Figure 19.

The receive signal input from pin 3 (RIF) of CN1 is amplified by IC43 : NJM5532M. If a HIGH signal is input to RIF, its amplitude is limited to prevent any signal that exceeds the input range to the analog to digital converter (IC25 : AK5340-VS). The signal is passed through the band-pass filter and buffer amplifier, and its frequency is converted by the mixer (IC18 : MC74HC4053F). The frequency of the receive signal is about 1/4 of sampling frequency fs. The fs/4 frequency is the most stable frequency for digital signal processing. The receive signal of the fs/4 frequency is passed through the buffer amplifier, amplified by amplifier IC21 : NJM4560M, and converted to digital data by the analog to digital converter (IC25).

CIRCUIT DESCRIPTION

This data is read into the gate array (IC3 : MBCG 241873-6173) in sampling intervals 1/fs. The data read into the gate array is fed to the DSP in 1/fs for processing. DSP A (IC1 : DSP56002FC40) carries out auto notching, demodulation, noise processing, and squelch processing, and DSP B carries out AGC and filter processing.

AGC data, one of the DSP B operation results, is sent to the digital to analog converter (IC34 : PCM69AU) from pin 33 of DSP B (IC2: DSP56002 FC40) in 1/fs intervals. AGC data is converted to an analog current by IC34, and converted to an analog voltage by the I-V converter IC35 : AD822AR, and is output to the RF unit as the AGC voltage. The AGC voltage is reversed by the reversing amplifier IC35 : AD822AR, and the S-meter voltage used for packet communication is generated and output from the SMET terminal of ACC2 (J5).

The digital data demodulated by two DSPs is sent to the gate array in 1/fs intervals. The data is sent to the digital to analog converter (IC27 : AK4318-VS) from pin 68 of the gate array in 1/fs intervals and converted to an analog signal. The demodulate signal converted to an analog signal is passed through the third low-pass filter IC28 : NJM2100M. This low-pass filter eliminates the alias components. The demodulate signal then enters the VCA (IC29 : M51131L). The VCA attenuates and outputs the demodulate signal according to the voltage given to pin 8 of IC29. The voltage at pin 8 is the voltage corresponding to the rotational angle of the AF VOL, and is controlled by the microprocessor in the control unit. The demodulate signal is passed through the VCA, amplified by the AF amplifier (IC33 : LA4422), and output to the speaker and headphone.

Demodulation data used for packet communication is passed through low-pass filter IC28 : NJM2100M, then attenuated by the VCA IC31 : M51131L. The attenuation amount is determined by the value set on the menu. The signal is passed through the VCA and ACC2 (J5) through the buffer amplifier Q17 : 2SC 2412K(S), and output to the TNC.

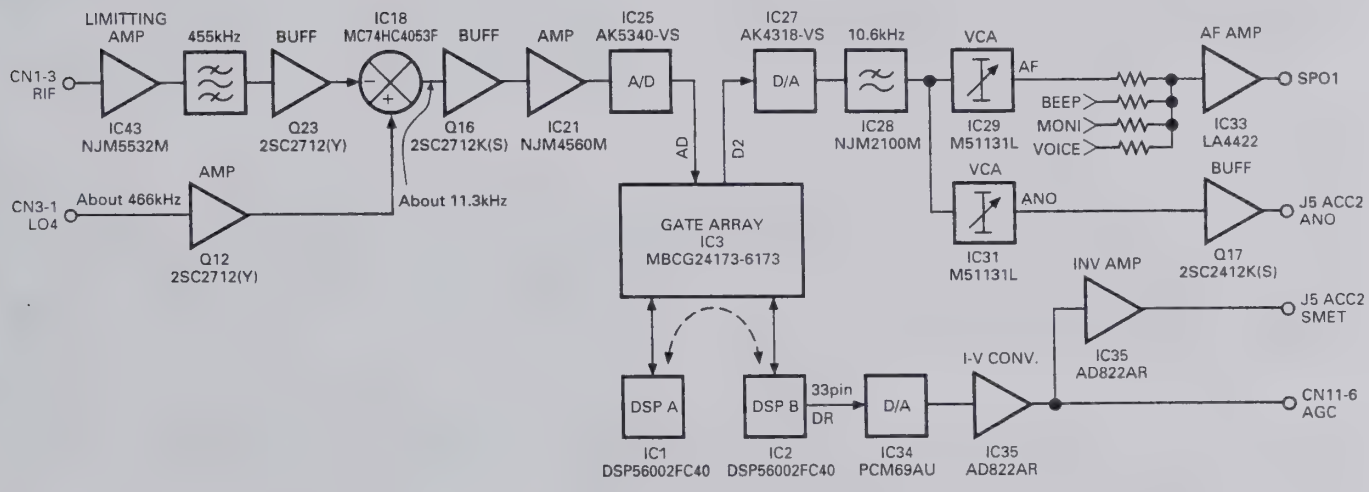

Fig. 19 Flow of receive signal

CIRCUIT DESCRIPTION

Then, flow of transmit signals is explained below. See Figure 20. If the mode is SSB, FM, or AM, the signal from the microphone is input. The signal enters the TX-RX unit through CN4. The signal is amplified by amplifier IC22 : AD822AR, and goes to the multiplexer (IC23 : MC74HC4052F). The multiplexer is used to switch between the microphone signal, the play signal from the DRU-3 (option), and packet signal. The signal passing through the multiplexer is amplified by amplifier IC24 : NJM2100M, and converted to digital data by the analog to digital converter (IC25 : AK5340-VS). The data is read into the two DSPs in the same way as for the receive signal. In transmit mode, DSP A carries out modulation, speech processing, and carrier signal generation in CW, FSK, and FM modes, while DSP B carries out VOX processing, voice equalizing processing, preemphasis processing (in FM mode), and microphone amplifier AGC processing.

The DSP does not perform modulation in FM mode. The DSP sends a 455kHz carrier signal from pin 1 (TIF) of CN1, adds subtone to the carrier signal, preemphasizes sounds, and limits the amplitude. Preemphasized audio data is sent from pin 33 of DSP A (IC1 : DSP56002FC40) to the digital-to-analog converter (IC34 : PCM69AU) in 1/fs intervals, and converted to an analog current. The analog current is converted to the audio signal of the analog voltage by the I-V converter IC36 : NJM4560M. IC36 also serves as the third low-pass filter that eliminates the alias components of the audio signal. The analog audio data signal is output from pin 3 (FMD) of CN3 to the PLL section.

The data modulated by the two DSPs (including FM carrier data) is sent to the gate array in the process as the demodulated signal. The signal is sent from pin 60 of the gate array to the digital to analog converter (IC16 : AK4318-VS) in 1/fs intervals, and converted to an analog signal. The frequency of this signal is fs/4. The analog modulated signal is passed through the third low-pass filter IC17 : NJM2100M to eliminate alias components. The signal is converted to the 455kHz IF signal by the mixer (IC18 : MC74HC4053F) and two ceramic filters (CF2 and CF3), and output from pin 1 (TIF) of CN1.

Monitor data, one of the DSP operation results, is sent to the gate array in the same process as the demodulate signal. Like the demodulate signal, the signal is sent from pin 68 of the gate array to the digital to analog converter (IC27 : AK4318-VS), and converted to an analog signal. The analog sidetone signal is passed through the third low-pass filter IC30 : NJM2100M and attenuated by VCA (IC31 : M51131L). The attenuation is determined by the rotational angle of MONI VOL. The flow of the signal after passing through the VCA is the same as for the demodulate signal.

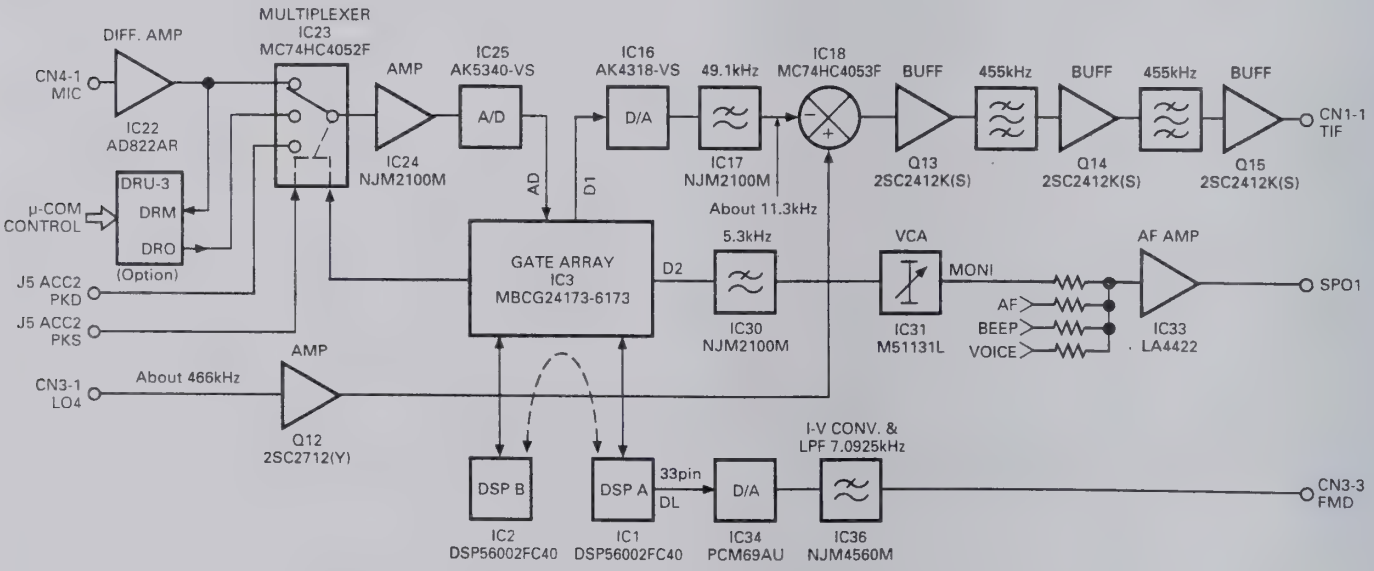

Fig. 20 Flow of transmit signal

CIRCUIT DESCRIPTION

■ Sidetone signal flow

When the electronic keyer is pressed, the sidetone is output. The sidetone is processed by DSP A. Sidetone data, a DSP A operation result, is output to the speaker or headphone in the same process as the monitor data. See Figure 21.

■ FSK tone signal flow

The flow of the FSK tone signal is the same as that of the sidetone. See Figure 21.

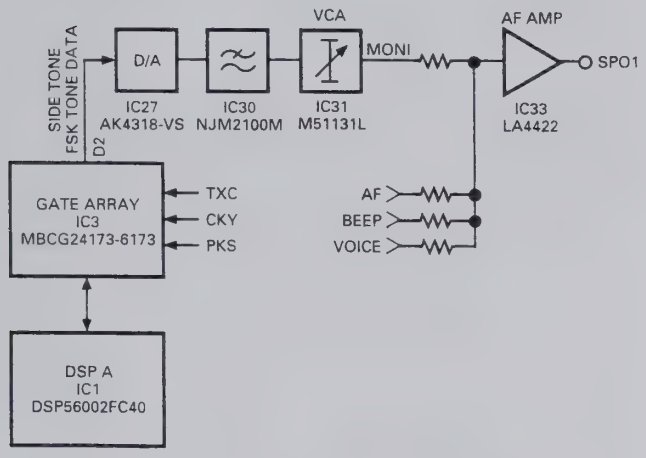

Fig. 21 Sidetone and FSK tone signal flow

■ Beep signal flow

When pin 6 (BEEP) of CN7 goes HIGH, DSP A sends beep data to the gate array in the same process as the demodulate signal. Like modulation data, the signal is sent from pin 60 of the gate array to the digital to analog converter (IC16 : AK4318-VS) in 1/fs intervals, and converted to an analog signal. The analog beep signal is passed through the primary low-pass filter IC19 : NJM4560M, and attenuated by VCA (IC29 : M51131L). The attenuation is determined by the value set on the menu. The flow of the signal after passing through the VCA is the same as for the demodulate signal.

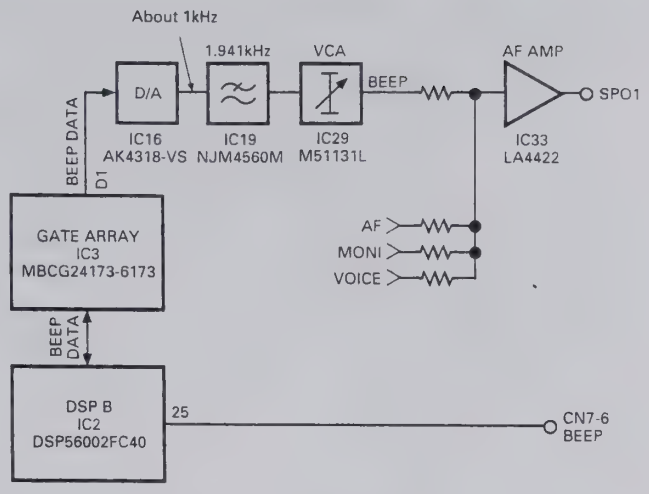

Fig. 22 Beep signal flow

■ DRU-3 recording and playback

The DRU-3 is controlled by the microprocessor in the control unit. During the DRU-3 recording, the MIC signal amplified by the differential amplifier (IC22 : AD822AR) is input to the DRU-3, and recorded. During DRU-3 playback, the playback signal is input to the analog-to-digital converter by switching the multiplexer (IC23 : MC74HC4052F). When the DSP receives a command "VOX ON and DRU playback" from the microcomputer, pin 38 of DSP B (IC2 : DSP56002FC40) goes HIGH and the SS line goes LOW. When the SS line goes LOW, the microprocessor sets the transceiver to transmit mode. This operation does not occur at the playback sound level of the DRU-3. Even if no sound is recorded, the transceiver enters the transmit mode when a DRU playback command arrives while VOX is ON. See Figure 20.

■ VS-2 audio signal flow

The audio signal output from the VS-2 is not processed by the DSP. The signal is amplified by the AF amplifier, and output to the speaker or headphone. The VS-2 is controlled by the microprocessor. See Figure 23.

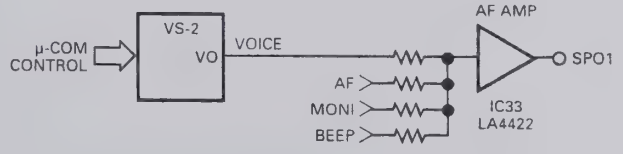

Fig. 23 VS-2 audio signal flow

CIRCUIT DESCRIPTION

■ Commands and data transferred to or from the microprocessor

To understand the DSP processing, the commands sent from the microcomputer to the DSP, and data sent from the DSP to the microcomputer are described below.

For details of error status, see the error list (Table 10).

1) Microprocessor → DSP

- Transmit mode
- Transmit filter
- CW rise (fall) time
- FSK shift width
- Squelch level
- Applicable filter follow speed
- SPAC interrelation time
- Check mode operation setting
- VOX delay time
- AGC release time
- TX AGC release time
- AGC correction
- TX equalizing
- FM modulation
- Processor compression level (LOW)
- Processor compression level (MID)
- Processor compression level (HIGH)
- RX AF AGC gain (AM/FM)
- RX AF AGC gain release time (AM/FM)
- TX AGC gain (packet input)
- Receive mode
- Receive filter
- CW pitch frequency
- FM subtone frequency
- Noise/interference elimination mode setting
- Auto notch follow speed
- Operation flag 1
- VOX gain
- RF gain (AGC)
- TX AGC gain
- AM modulation
- Carrier level
- Operation flag 2

2) DSP → Microprocessor

- S-meter data
- Compression level data
- Squelch status
- Microphone level data
- Error status
- Check mode status

Error No.	Error description
00	TX-RX unit is not connected.
01	Main DSP stack error
02	Main DSP trace error
03	Main DSP software interrupt
04	Main DSP SSI reception
05	Main DSP SSI exceptional reception
06	Main DSP SCI reception
07	Main DSP SCI exceptional reception
08	Main DSP SCI transmission
09	Main DSP SCI line idle detection
0A	Main DSP NMI
0B	Main DSP invalid command detection
0C	Command cannot be transferred from the main DSP to the sub DSP.
10	RAM check error 1
11	RAM check error 2
12	Gate array check error
21	Sub DSP stack error
22	Sub DSP trace error
23	Sub DSP software interrupt
24	Sub DSP SSI reception
25	Sub DSP SSI exceptional reception
26	Sub DSP SCI reception
27	Sub DSP SCI exceptional reception
28	Sub DSP SCI transmission
29	Sub DSP SCI line idle detection
2A	Sub DSP NMI
2B	Reserved
2C	Reserved
2D	Sub DSP invalid command detection
2E	Reserved
F0	Main DSP timeover error
F1	Sub DSP timeover error
FD	PLL unlock (TX-RX unit)
FE	PLL unlock (RF unit PLL section)
FF	Temperature protection error

Table 10 Error list

CIRCUIT DESCRIPTION

■ New function circuit

The TS-870S noise processing, auto notch, line enhancer, SPAC, and beat cancel functions are characteristics of the DSP digital signal processing. These functions and other features are described below.

1) Auto notch

The auto notch corresponds to the IF filter used in the previous models. It is an adaptive filter, and emphasizes weak signals by tracking interfering signals automatically in the AGC loop (the reception gain increases). The notch filter has very good damping and frequency characteristics in the receiving bandwidth.

2) Beat cancel

The "beat cancel" corresponds to the AF filter used in the previous models. It also is an adaptive filter, and finds and removes beat components from the received signal. Unlike the notch filter, this filter removes multiple beats, but it does not emphasize weak signals even if the beat is canceled.

3) Noise reduction

The TS-870S uses a line enhancer or SPAC to reduce noise. One of these two functions should be assigned to the N.R. key on the front panel.

The line enhancer is an adaptive filter which does not attenuate the target signal, but attenuates only noise. If the conditions are not very bad, the S/N ratio can be improved greatly.

Select SPAC to improve the S/N ratio effectively. SPAC stands for "Speech Processing System by use of Auto Correlation function." It takes the periodical signal (target reception signal) and suppresses noise using the Auto Correlation function. Since SPAC takes reception signals with a certain time width, the signals become discontinuous and cause noise.

Since the auto notch, beat cancel, and line enhancer are adaptive filters, their characteristics change according to the input signal. If the automatic tracking is set to OFF on the menu when the filter effect is good under good signal conditions, the effect does not change even if the conditions turn bad.

4) VOX

DSP processes the correlation between the received signal and signal from the microphone, and carries out the conventional anti-VOX processing. Therefore, TS-870S does not have anti-VOX.

5) SSB modulation/demodulation

TS-870S uses the PSN modulation/demodulation used for TS-950 and subsequent models. With the increase in the DSP operation precision, the side-band suppression has been improved in a very wide bandwidth from 25Hz to 6kHz (80dB or more for modulation and 90dB for demodulation). The PSN method does not eliminate all group-delay distortion because the Hilbert converter uses an IIR filter. The TS-870S uses a linear phase shifter with a Hilbert converter containing an FIR filter. As the FIR filter can keep group delay constant, it does not cause group-delay distortion. However, as the group-delay itself increases, if the linear phase shifter is set to ON via the menu, a signal is transmitted several ms after a voice enters the microphone.

■ Analog section and other circuits

The analog section and other circuits were described in the flow of transmission and reception signals. This section describes the circuits that were not explained in the flow of transmission and reception signals.

1) Reference voltage circuit

Since TS-870S does not have a negative power supply, a 2.5V reference voltage, which is half the power supply voltage, is supplied to the OP amplifier to process analog signals linearly. Fig. 24 shows this circuit. 2.5V are produced by dividing the power supply voltage by R129 and R132. This voltage is provided to the circuitry through buffer amplifier IC19 or IC20.

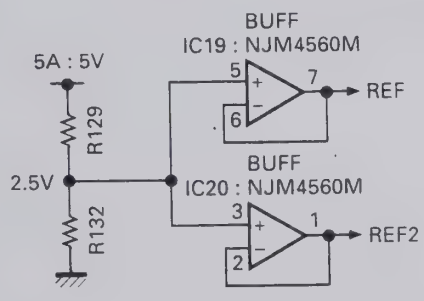

Fig. 24 Reference voltage circuit

CIRCUIT DESCRIPTION

2) Pop mute circuit

The mute circuit shown in Fig. 25 reduces the pop sound when the power is switched ON and OFF. If CN7 pin 16 AMUT is LOW, the mute circuit consisting of IC44 : TC7S04F and Q22 : DTC124EK mutes the AF amplifier (IC33 : LA4422) and suppresses the pop sound when the power is turned ON. A microprocessor controls AMUT and cancels muting at an appropriate time.

When the power is turned OFF, muting is also controlled by AMUT, but is done only if the power switch ON TS-870S is pressed. The circuit comprising Q25 : DTA143EK, Q26 : DTC124XK, and Q27 : DTC143EK suppresses the pop sound when the external power supply switch is turned OFF. When this switch is turned OFF, the voltage of the AF amplifier power supply 14A decreases. When the 14A voltage falls, Q25 becomes active (ON), and then Q26 becomes active (the collector goes LOW to mute the AF amplifier and suppress the pop sound. Q27 prevents muting when the voltage of the AF amplifier power supply 14A falls during transmission.

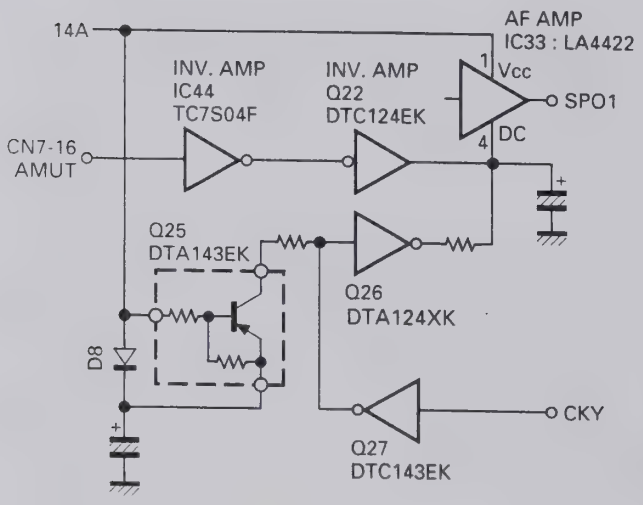

The TS-870S uses AF amplifier IC33: LA4422 pin 4 (DC) as the mute pin.

Fig. 25 Pop mute circuit

■ Transmit/receive frequency characteristics correction circuit

The transmission sound quality has a flat frequency characteristic due to DSP modulation. However, the low-frequency range is also flat to the cut-off frequency, so the model has less clarity compared to the conventional transceivers. A correction circuit is provided to suppress the low-frequency range. It consists of R141, R155, and C145 in the TX-RX unit, and it is –2dB at 300Hz for 1kHz.

To return to the flat frequency characteristic, remove C145 and replace R155 with a 1.8kΩ resistor. (See Figure 26.)

The receive frequency is also flat, as well as the hi-fi sound quality when the filter is widened. When the receive frequency is flat, the volume of the low-frequency range becomes insufficient, so a correction circuit that slightly emphasizes the low-frequency range is provided. It consists of R204, R205, R208, and C208 in the TX-RX unit, and it is +2dB at 1kHz for 3kHz.

To return to the flat frequency characteristic, remove R205. (See Figure 26.)

Transmit side

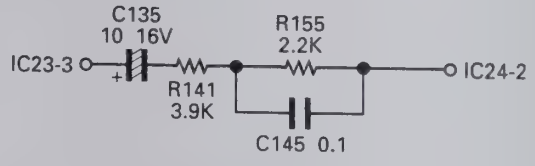

Receive side

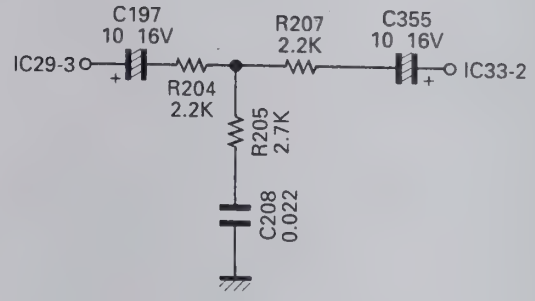

Fig. 26 Transmit/receive frequency characteristics correction circuit

DESCRIPTION OF COMPONENTS

RF UNIT (X44-3210-00) (A/9) : RF

Ref. No.	Use/Function	Operation/Condition
Q1	Switching	On when exit RX on.
Q2	Switching	On when TX.
Q3	Switching	Off when ATT1 or ATT2 on.
Q5	TX RF amplifier	Drive output (TX frequency)
Q6	Switching	DATT on
Q7	Switching	1/2 : 30kHz~490kHz 2/2 : 490kHz~1.62MHz
Q8	Switching	1/2 : 1.62MHz~2.49MHz 2/2 : 2.49MHz~3.99MHz
Q9	Switching	1/2 : 3.99MHz~6.99MHz 2/2 : 7.30MHz~10.49MHz
Q10	Switching	1/2 : 6.99MHz~7.30MHz 2/2 : 13.99MHz~14.49MHz
Q11	Switching	1/2 : 20.99MHz~21.49MHz 2/2 : 21.49MHz~30.00MHz
Q12	Switching	1/2 : 14.49MHz~20.99MHz 2/2 : 10.49MHz~13.99MHz
Q13	RF amplifier	21.49MHz~30.00MHz
Q14, 15	RF amplifier	30kHz~21.49MHz
Q16	Amplifier	LO1 : 73.08MHz~103.05MHz
Q17~20	Mixer	$f_{LO1} - f_{RF}$ = 73.05MHz
Q21	Ripple filter	14S
Q22	Amplifier	73.05MHz
Q23	Mixer	73.05MHz – 64.22MHz = 8.83MHz
Q24	Amplifier/AGC	73.05MHz
Q26, 27	Mixer	73.05MHz – 64.22MHz = 8.83MHz
Q28	Amplifier	8.83MHz
Q29~31	Amplifier/AGC	8.83MHz
Q32	AGC	NB (Noise blanker)
Q33	Amplifier/AGC	8.83MHz
Q35, 36	Mixer	73.05MHz → TX f
Q37, 38	Mixer	8.83MHz → 73.05MHz
Q39	Amplifier	TX IF
Q42	Switching	RF blanking
Q43, 44	DC amplifier	ALC
Q45, 46	Switching	On when AM mode.
Q47	DC amplifier	ALC
Q48	Switching	On when AM transmission mode.
Q49	Switching	
Q50	DC amplifier	ALC amplifier
Q51	Switching	Pulse generate when AM transmission mode.
Q52	DC amplifier	ALC amplifier
Q54	Switching	Off when NB.
Q55	Switching	Make relay for linear.
Q56	Switching	On when TX.
Q57, 59	Switching	TXB generate
Q58, 60	Switching	RXB generate
Q61	Switching	On when AIP off (0~21.49MHz).
Q62	Switching	On when AIP off (21.49~30MHz).
Q63	Switching	On when AIP off.
Q64	Switching	On when AIP on.
Q65	Switching	12V when RX.
Q66	Switching	On when RX.
Q70, 71	Switching	CKY
IC1	Serial/Parallel conversion	BPF selection
IC2	Serial/Parallel conversion	
IC6	OP amplifier	ALC meter
IC7	DAC	8 ch
IC8	Meter amplifier	VSF, VSR, ALC and Processor.

DESCRIPTION OF COMPONENTS

Ref. No.	Use/Function	Operation/Condition
IC9	Comparator	NB pulse
IC10	AVR	8V → 5V
D1~3	Relay surge absorption	
D4~7	Large input protection	
D8	RF switch	On when RX.
D10	RF switch	On when TX.
D11~33, 35	RF switch	BPF switch
D36, 37	RF switch	On when AIP on.
D38, 39	RF switch	ON when 21.49MHz or more RF amplifier selection.
D40, 41	RF switch	On when 21.50MHz or less RF amplifier selection.
D42	RF switch	
D43	RF switch	LO2 (64.22MHz) switch
D46	RF switch	Noise detection
D47	RF switch	TGC voltage control
D49	RF switch	Gain control
D50	Zener diode	-6.2V stability
D51	LED	Voltage generate
D52	Zener diode	12V (ALC voltage for linear)
D53	Switch	Pulse generate
D54	Reverse current prevention	
D55	Zener diode	3V (Voltage shift)
D56	Switch	ALC
D57	LED	CKY
D58	Relay surge absorption	
D59	Reverse current prevention	RBK
D60	RF switch	On when 29MHz.
D61	RF switch	On when AIP on.
D62	RF switch	On when RX.
D63, 64	RF switch	8.83MHz filter changeover (15kHz).
D65, 66	RF switch	8.83MHz filter changeover (3kHz).
D67	RF switch	8.83MHz filter changeover (6kHz).
D68	RF switch	On when TX.
D69	RF switch	8.83MHz filter changeover (6kHz).
D70	Zener diode	6.2V (Voltage shift)
D71	Zener diode	4.7V (Voltage stability)
D72	Switch	CKY

RF UNIT (X44-3210-00) (B/9) : PLL

Ref. No.	Use/Function	Operation/Condition
Q500	Buffer	D/A buffer
Q501	Amplifier	20MHz (fSTD)
Q502	Mixer IC506 input buffer	5.46~4.46MHz
Q503	Buffer	D/A buffer
Q504, 505	Switching	Chopper
Q506	Buffer	Output for chopper
Q507	Amplifier	LO3 (8.375MHz)
Q508	Buffer	For LO3 output
Q510	Buffer	D/A buffer
Q511	Buffer	For LO4 output
Q512	Amplifier	REF 20MHz
Q513	Tripled circuit	fSDT x 3 = 60MHz
Q514, 515	Buffer	Reference oscillator 20MHz
Q516	VCO A changeover	
Q517	VCO B changeover	

DESCRIPTION OF COMPONENTS

Ref. No.	Use/Function	Operation/Condition
Q518	VCO C changeover	
Q519	VCO D changeover	
Q520	VCO A	73.08~80.54MHz
Q521	VCO B	80.54~87.54MHz
Q522	VCO C	87.54~94.54MHz
Q523	VCO D	94.54~103.05MHz
Q524	Buffer	VCO A~VCO D output (73.08~103.05MHz)
Q525	Mixer IC508 input buffer	73.08~103.05MHz
Q526	Buffer	For LO1 output
Q527	Active LPF	Comparison 1MHz
Q528, 529	Active LPF	
Q530	Amplifier	PLL IC IC507 input (18~48MHz)
Q531	Amplifier	18~48MHz
Q532	Amplifier	LO2A output (64.22MHz)
Q533	Switching	PLL unlock signal output ("H" : Unlock)
Q534~536	Active LPF	Comparison 20kHz (5kHz in FM mode)
Q537	Switching	FM modulation input on/off
Q539	Buffer	For LO2A outrput
Q800	Reference oscillator	Reference frequency 20MHz oscillation.
IC500	DDS	1.46~0.46MHz for LO1
IC501	DDS	1.625MHz for LO3
IC502	DDS	For LO4
IC503	Divider	20MHz x (1/5) = 4MHz
IC505	Mixer	1.46~0.46MHz → 5.46~4.46MHz
IC506	Mixer	5.46~4.46MHz → 54.54~55.54MHz
IC507	PLL	2~5 : Frequency division ratio input 6 : 18~48MHz input 9 : Lock voltage output 11 : Unlock output (Unlock : "L") 15 : 20MHz input
IC508	Mixer	73.05~103.05 + 54.54~55.54 = 18~48MHz
IC509	PLL	2~5 : Frequency division ratio input 6 : 64.22MHz input 9 : Lock voltage output 11 : Unlock output (Unlock : "L") 15 : 20MHz input
IC510	AVR	13.8V → +9V
IC511	AVR	13.8V → +9V low drop-out
D500	Vari-cap diode	VCO A
D501	Switching	VCO A output
D502	Vari-cap diode	VCO B
D503	Switching	VCO B output
D504	Vari-cap diode	VCO C
D505	Switching	VCO C output
D506	Vari-cap diode	VCO D
D507	Switching	VCO D output
D508	Reverse current prevention	Unlock signal detection

FINAL UNIT (X45-351X-XX) (A/5) : FINAL 0-00 : K,P,M,M2,X 2-71 : E,E2,E3,E9

Ref. No.	Use/Function	Operation/Condition
Q501	Pre-drive amplifier	Wide-band amplification of HF band
Q502, 503	Drive amplifier	Push-pull wide-band amplification of HF band
Q504	Drive bias supply	Temperature compensation of drive
Q505, 506	Final amplifier	Push-pull wide-band amplification of HF band
Q507	Final bias supply	Temperature compensation of final
D501	Temperature compensation	Temperature sensing of pre-drive
D502	Temperature compensation	Temperature sensing of drive
D503	Temperature compensation	Temperature sensing of final
D504	Reverse power connection protection	

DESCRIPTION OF COMPONENTS

FINAL UNIT (X45-351X-XX) (B/5) : FILTER

Ref. No.	Use/Function	Operation/Condition
Q1~5	Relay driver	
Q6	Switch	Antenna tuner through tune
Q10~16	Relay driver	
IC1	Band data decoder	
D1	High-frequency rectification	Reflected wave rectification
D2	High-frequency rectification	Forward wave rectification
D3	Voltage stabilization	5.1V
D4	Relay surge absorption	1.6~2.0MHz LPF relay
D5	Relay surge absorption	2.0~4.0MHz LPF relay
D6	Relay surge absorption	4.0~7.5MHz LPF relay
D7	Relay surge absorption	7.5~10.5MHz LPF relay
D8	Relay surge absorption	10.5~14.5MHz LPF relay
D9	Relay surge absorption	14.5~21.5MHz LPF relay
D10	Relay surge absorption	21.5~30.0MHz LPF relay
D11	Switching	

FINAL UNIT (X45-351X-XX) (C/5) : CONNECTION

Ref. No.	Use/Function	Operation/Condition
Q401~403	DC/DC	-6V
Q404	Ripple filter	14S → 14V
Q405	Ripple filter, AVR	
Q460, 461	Mixer	RX
Q470, 471	Mixer	TX
Q472, 475	Amplifier	TX IF
IC402	5V AVR	8V → 5V (For PLL)
D401	Rectification	
D402	Current stabilization	9V
D450	Reverse current prevention	
D451~456	RF switch	BPF switch
D457	Reverse current prevention	

FINAL UNIT (X45-351X-XX) (D/5) : AVR

Ref. No.	Use/Function	Operation/Condition
Q601	Switch	14S supply when power switch on.
Q701	Switch	On when fan operation
Q702, 703	Switch	Fan motor drive
IC601	8V AVR	13.8V → 8V (Analog 8V : 8A)
IC602	8V AVR	13.8V → 8V (Digital 8V : 8D)
IC701	Comparator	Fan control
D601	Relay surge absorption	
D701	Reverse current prevention	
D702	Surge absorption	

FINAL UNIT (X45-351X-XX) (E/5) : RELAY

Ref. No.	Use/Function	Operation/Condition
D301	Lightning surge protection	ANT1
D302	Lightning surge protection	ANT2
D303	Relay surge absorption	Antenna changeover relay
D304	Relay surge absorption	TX/RX changeover relay

DESCRIPTION OF COMPONENTS

AT UNIT (X53-3340-02)

Ref. No.	Use/Function	Operation/Condition
Q1, 2	Amplifier	Waveform shaping
Q3	Switching	On when APRE is "H".
Q4, 5	Switching	Motor speed control pulse
IC1	DFF	Phase difference detection 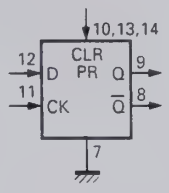 Function table INPUTS: CLOCK, D; OUTPUTS: Q, $\overline{Q}$ ↑, L, L, H L, X, Qo, $\overline{Qo}$
IC2	Analog switch	For control changeover motor 1 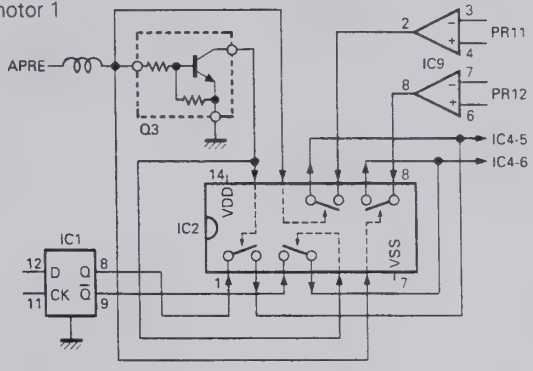
IC3	Analog switch	For control changeover motor 2 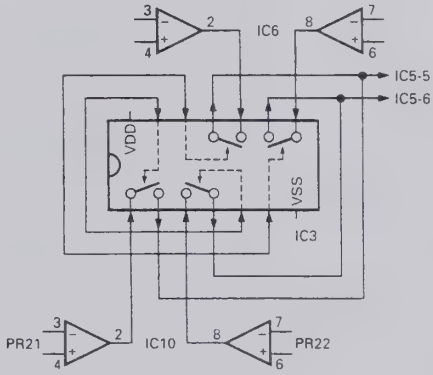
IC4	Motor drive	For motor 1 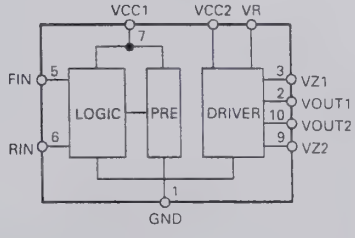
IC5	Motor drive	For motor 2
IC6	Comparator	Amplification difference detection
IC7	AVR	+5V
D1	Detector	Current component amplification detection
D2	Detector	Voltage component amplification detection
D3~8	Switching	Clipper
D10	Switching	Spike absorption
D101~103	Switching	Spike absorption
D105~108	Switching	Spike absorption
D109, 110	Switching	Band data

DESCRIPTION OF COMPONENTS

CONTROL UNIT (X53-356X-XX) (A/4) : CONTROL

0-11 : K,P 0-21 : M 0-22 : M2 0-71 : X 2-71 : E 2-72 : E2 2-73 : E3 2-74 : E9

Ref. No.	Use/Function	Operation/Condition
Q1, 2	Switching	Voltage drop changeover
Q3, 4	Switching	Multiplexer changeover
Q5	Switching	EEPROM write control changeover
Q6~11	Switching	AT control (PR11, PR12, PR21, PR22, APRE, SPED)
Q12, 13	Switching	AT-300 control and input (TS, TT)
Q14, 15	Switching	AT-300 control and output (TS, TT)
Q16	Switching	IC24 control (Reset)
Q17~19, 22	Switching	IC24 control (CH1, 2, 3, 4)
Q20, 24	Switching	IC24 control (DOT)
Q21, 23	Switching	IC24 control (DASH)
Q27	Switching	VBSY signal
Q28	Switching	KEY signal
Q29	Switching	Filter changeover (6kHz)
Q30	Switching	Filter changeover (3kHz)
Q31	Switching	Filter changeover (15kHz)
Q33	Switching	BLNK signal
IC1, 2	Regulator	5V output
IC3	Regulator	8V output
IC4	EEPROM	Adjustment data saving
IC5	Reset, Power supply changeover	System reset and Back-up power supply changeover
IC6	CPU	8 bit microcomputer (Main)
IC7, 10	Inverter	Reverse data
IC8	RAM	8K-byte
IC9, 13	Multiplexer	A/D data changeover
IC11	OR gate	RD/WR signal output
IC12	ROM	64K-byte
IC14	AND gate	Chip select combination for RAM and ROM
IC15	Bidirectional buffer	Data bus input/output changeover
IC16, 22, 23	Extended I/O	8 bit x 4, 4 bit x 1
IC17, 18	Decoder	Converts the address signal into a chip select signal for each IC.
IC19	Latch	Chip select signal latch
IC20, 21	Encoder gate array	Encoder pulse count
IC24	CPU	8 bit microcomputer (Electronic keyer)
IC25, 26	Schmitt trigger	Encoder chattering absorption
IC27	Level shift	RS-232 level shift
IC28	OP amplifier	Buffer
IC29	OR gate	CKY signal and BPC signal combination
D1~3	Protection diode	Power supply
D4	Voltage detector	Voltage drop detection (About 10V)
D5	Protection diode	Reverse current prevention
D6	Protection diode	KEYS line
D7	Protection diode	DASH line
D8	Protection diode	DOT line
D9	Protection diode	MD line
D10	Protection diode	MU line
D11	Protection diode	KEY line
D12	Protection diode	SS line

DESCRIPTION OF COMPONENTS

CONTROL UNIT (X53-356X-XX) (B/4) : SW

Ref. No.	Use/Function	Operation/Condition
Q501, 502	LED switch	
IC501~504	Serial/Parallel	Data conversion for tact switch and LED
D501, 502	LED	
D510~519	LED	

TX-RX UNIT (X57-4620-00)

Ref. No.	Use/Function	Operation/Condition
Q1	Switch	Change SS line to low when VOX active.
Q2	Amplifier	64.22MHz
Q3	Amplifier	REF 20MHz
Q4	Switch	On/Off when squelch open/close (For packet).
Q5, 7	Active LPF	
Q6	Active LPF	PLL loop filter
Q8	VCO	46.32MHz oscillation circuit
Q9, 10	VCO	Output buffer
Q12	Amplifier	LO4 466kHz
Q13, 15	Buffer	TX IF 455kHz
Q14	Amplifier	TX IF 455kHz
Q16	Buffer	Receive signal for DSP processing (11.3kHz)
Q17	Buffer	ACC2 audio output
Q22	Switch	Mute signal (Power on/off)
Q23	Buffer	RX IF 455kHz
Q25	Pulse generator	AF mute
Q26	Switch	Mute signal
Q27	Switch	Mute signal absorption (Mute inhibit when TX)
IC1	DSP A	Main DSP
IC2	DSP B	Sub DSP
IC3	Gate array	For interface
IC4	DSP ROM	Low (D0~D7) 32KB
IC5	DSP ROM	Mid (D8~D15) 32KB
IC6	DSP ROM	High (D16~D23) 32KB
IC7	DSP RAM	8K ward
IC9	PLD	Timing generator
IC15	PLL IC	46.32MHz clock generation
IC16	DAC	Rch : BEEP signal (About 1kHz) Lch : Transmission signal (11.3kHz)
IC17	Active filter	TX (fc = 49.1kHz) 3rd LPF
IC18	Mixer	RX : 455kHz → 11.3kHz TX : 11.3kHz → 455kHz
IC19	Voltage follower, Active LPF	Reference voltage buffer, BEEP LPF (fc = 1.9kHz)
IC20	Voltage follower	Reference voltage buffer
IC21	LPF, Buffer	RX IF 11.3kHz
IC22	Amplifier	Microphone amplifier, unbalanced/balanced modulation
IC23	Multiplexer	MIC, DATA, DRU-3 changeover
IC24	LPF, Buffer	TX microphone amplifier, unbalanced/balanced modulation
IC25	ADC	Rch : Reception signal Lch : Microphone input signal
IC26	DAC	VCA control
IC27	DAC	Rch : Monitor signal Lch : De-modulation signal
IC28	Active LPF	De-modulation signal (fc = 10.6kHz)
IC29	VCA (Electronic volume)	De-modulation signal, BEEP
IC30	Active LPF	Monitor signal (fc = 5.3kHz)
IC31	VCA (Electronic volume)	Packet AF, monitor
IC33	AF amplifier	Audio amplifier

DESCRIPTION OF COMPONENTS

Ref. No.	Use/Function	Operation/Condition
IC34	DAC	Rch : AGC signal Lch : FM modulation signal
IC35	I-V converter, Inverter	AGC and S-meter voltage
IC36	I-V converter, Active LPF	FM modulation signal (fc = 7.2kHz)
IC37	AVR	13.8V → Analog 5V
IC38	AVR	Digital 8V → Digital 5V
IC39	AVR	13.8V → 5V for PLL
IC40	AVR	13.8V → 8V for PLL
IC41, 42	Buffer	VCA control
IC43	Clipper amplifier	RX IF 455kHz
IC44	Inverter	Mute (Power on/off)
D1~4	Reverse current prevention	
D5	VCO bari-cap diode for DSP	64.32MHz oscillation
D7, 8	Reverse current prevention	

SEMICONDUCTOR DATA

PLL : MB86001PF (RF Unit IC507, 509, TX-RX Unit IC15)

■ Terminal connection diagram

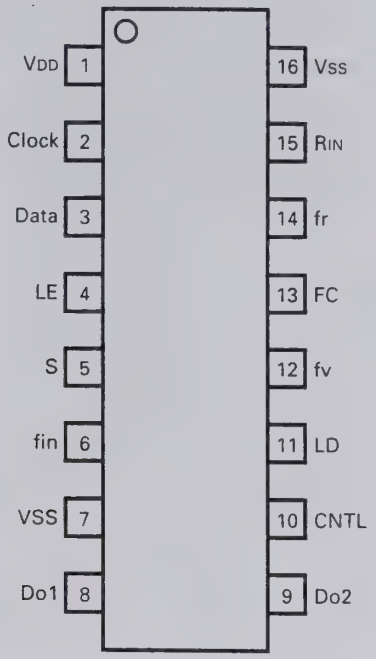

■ Terminal functions

Pin No.	Pin code	I/O	Function
1	VDD	–	Power supply pin.
2	Clock	I	Shift register clock input pin. Serial data is taken in at the rising edge of the clock signal. The input section contains a Schmitt trigger circuit.
3	Data	I	Serial data input pin for setting the divide ratio of each divider. The input section contains a Schmitt trigger circuit.
4	LE	I	Shift register load enable signal input pin. When LE is high, the divider ratio data is transferred to the latch specified by the control bit. This data is used as the divide ratio of each divider. The input section contains a Schmitt trigger circuit.
5	S	I	Switch pin for selecting the latch for setting the divide ratio of each divider. When the S pin is low, latch V1 is selected. When the S pin is high, latch V2 is selected. The divide ratio data is then sent to the divider.
6	fin	I	Divider input pin. The input section contains a bias circuit and an amplifier. Connect the voltage control oscillator (such as a VCO) by AC-coupling.
7	Vss	–	Ground pin.
8	Do1	O	Phase comparator output pin (charge pump). The Do1 output level can be reversed by FC The reference divider output fr and divider output fv are related as follows. On when CNTL is low. fr > fv : High level (FC : Low), Low level (FC : High), fr = fv : High impedance, fr < fv : Low level (FC : Low), High level (FC : High)
9	Do2	O	Phase comparator output pin (charge pump). The relationships between the reference divider output fr and divider output fv are the same as for Do1. On when CNTL is high.
10	CNTL	I	Pin that controls charge pump outputs Do1 and Do2. The relationships between CNTL, Do1 and Do2 are as follows When CNTL is low, Do1 : Output, Do2 : High impedance. When CNTL is high, Do1 : High impedance, Do2 : Output.
11	LD	O	Phase comparator output pin. When PLL is locked, LD is high. When PLL is unlocked, LD is low
12	fv	O	Divider division output monitor pin. A signal is output from the pin in monitor mode. Normally, this pin has high impedance.
13	FC	I	Phase comparator input switch pin.
14	fr	O	Reference divider division output monitor pin. A signal is output from this pin in monitor mode. Normally, this pin has high impedance.
15	RIN	I	Reference divider input pin. The input section contains a bias circuit and an amplifier. Connect the reference oscillator (such as TCXO) by AC-coupling.
16	Vss	–	Ground pin.

SEMICONDUCTOR DATA

Bidirectional buffer : TC74VHC245F (COntrol Unit IC15)

■ **Terminal connection diagram**

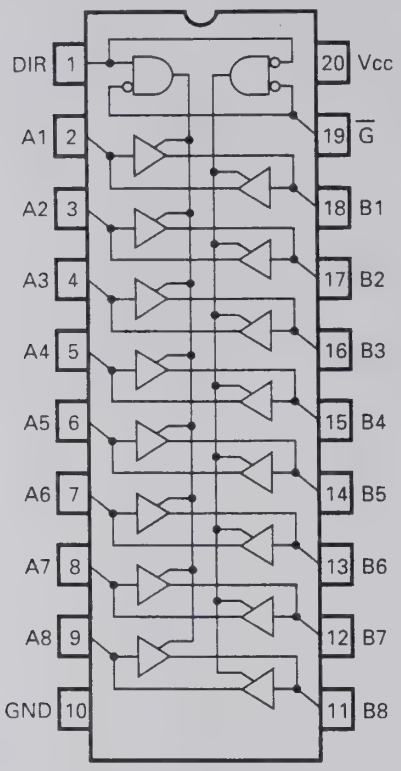

■ **Logic diagram**

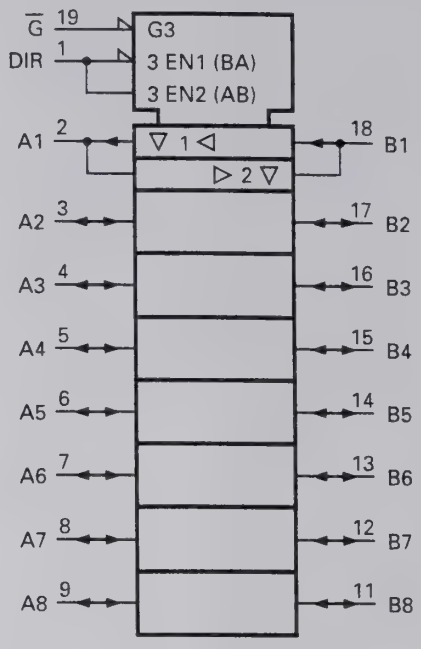

■ **Truth table**

Input		Function		Output
$\overline{G}$	DIR	A bus	B bus	state
L	L	Output	Input	A=B
L	H	Input	Output	B=A
H	X	High impedance		Z

X : Don't Care Z : High impedance

SEMICONDUCTOR DATA

DC/AC Converter : AK4318-VS (TX-RX Unit IC16, 27)

■ Terminal connection diagram

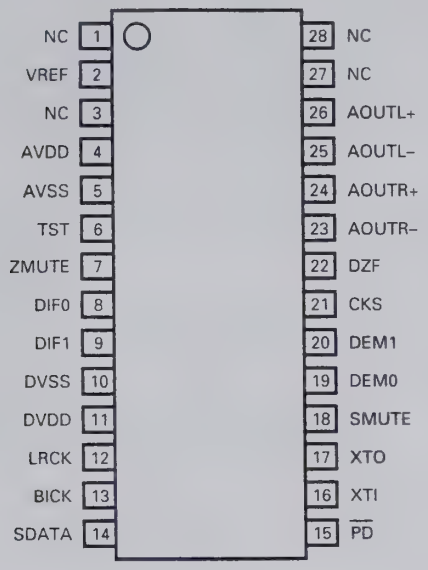

■ Block diagram

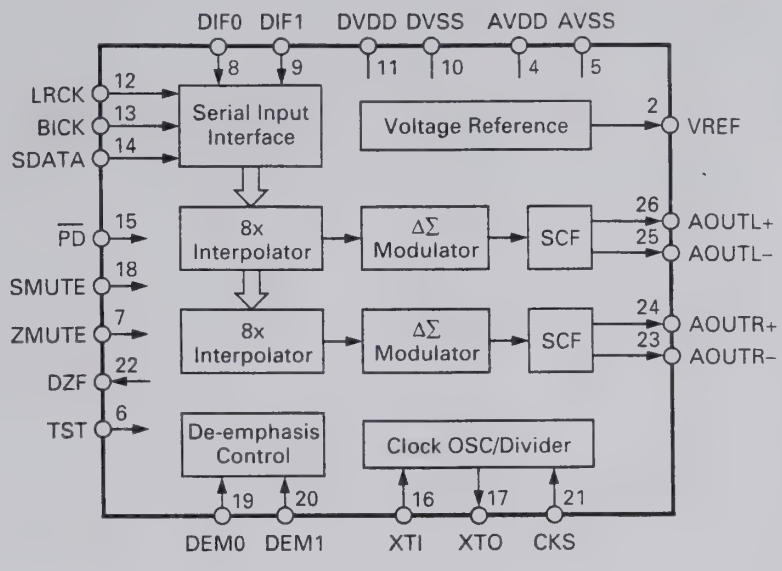

■ Terminal functions

Pin No.	Pin name	I/O	Function
1	NC	–	
2	VREF	O	Reference voltage output pin (AVDD) – 3.75V. The 10µF electrolytic capacitor and 0.1µF ceramic capacitor are connected between VREF and AVDD.
3	NC	–	
4	AVDD	–	Analog power supply pin (+5V).
5	AVSS	–	Analog ground pin.
6	TST	I	Test pin (pull down). Must be open or low.
7	ZMUTE	I	Zero mute pin (pull down). High : Detects zero and mutes output.
8, 9	DIF0, DIF1	I	Input format pin. Supports four modes.
10	DVSS	–	Digital ground pin.
11	DVDD	–	Digital power supply pin (+5V).
12	LRCK	I	L/R clock pin. Determines the input serial data channel.
13	BICK	I	Serial bit clock pin. The clock latches serial data.
14	SDATA	I	Serial data input pin. Number two's complement MSB first.
15	PD	I	Reset pin. When this pin goes low, the filter and modulator are reset. Make this pin low to reset the filter and modulator when the power is turned on.
16	XTI	I	Clock input pin. Connect a crystal oscillator between XTI and XTO or input the external CMOS clock to XTI. The clock frequency can be selected with the CKS pin.
17	XTO	O	Crystal oscillator output pin. If the crystal oscillator is used, connect it between the XTO and XTI pins. If the external clock is used, open this pin.
18	SMUTE	I	Soft mute pin (pull down). High : Soft mute, Low : Cancel
19, 20	DEM0, DEM1	I	De-emphasis mode pin. Supports three frequencies.
21	CKS	I	Clock select pin. Low : CLK 256 fd, High : CLK 384 fs
22	DZF	O	Zero input detection pin. High when the data input to the SDATA pin for both channels becomes zero 8192 times consecutively.
23	AOUTR–	O	Right-channel analog negative output pin.
24	AOUTR+	O	Right-channel analog positive output pin.
25	AOUTL–	O	Left-channel analog negative output pin.
26	AOUTL+	O	Left-channel analog positive output pin.
27, 28	NC	–	

SEMICONDUCTOR DATA

AC/DC Converter : AK5340-VS (TX-RX Unit IC25)

■ Terminal connection diagram

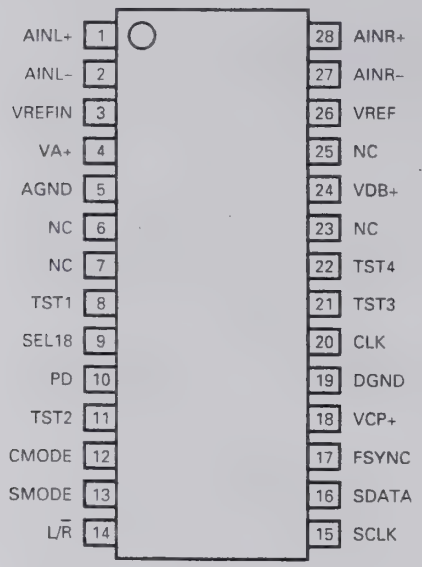

■ Block diagram

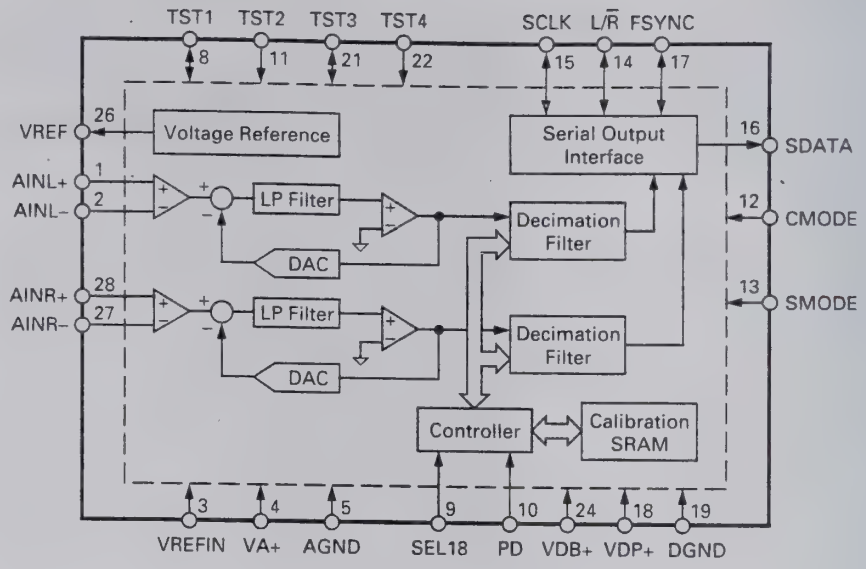

■ Terminal functions

Pin No.	Pin name	I/O	Function
1	AINL+	I	Left-channel analog non-inverted input pin.
2	AINL–	I	Left-channel analog inverted input pin.
3	VREFIN	I	Reference voltage input pin. Normally connect to the VREF pin. The input range is 1.6 times the difference between VA+ and the voltage input to this pin.
4	VA+	–	Analog section analog power supply pin (+5V).
5	AGND	–	Analog section analog ground pin.
6, 7	NC	–	
8	TST1	–	Test pin. Open or connect to DGND.
9	SEL18	I	Output data length select pin (with pull down resistor). Low : 16 bits, High : 18 bits
10	PD	I	Power down pin. High : Power down mode. Offset calibration starts at a falling edge. When the power is turned on or the clock frequency is changed, calibration must be carried out.
11	TST2	–	Test pin. Open or connect to DGND.
12	CMODE	I	Master clock select pin. Low : CLK 256 fs (12.288MHz @fs : 48kHz), High : CLK 384 fs (18.432MHz @fs : 48kHz)
13	SMODE	I	Interface clock select pin. Set the input/output of each of the L/R̄, SCLK, and FSYNC clock pins. Low : Save mode (all input pins), High : Master mode (all output pins)
14	L/R̄	I/O	Input channel select pin. Slave mode : The fs clock is input. Lch MSB data is output at a rising edge and Rch MSB data is output at a falling edge of the clock signal. Master mode : The fs clock is output. SDATA is output one clock after the L/R̄ edge. High when the power is down (PD : High).
15	SCLK	I/O	Serial data clock pin. One bit of data is output at a falling edge of the clock. Slave mode : Normally a 32 to 64 fs clock is input. Master mode : A 64 fs clock is output. Low when the power is down (PD : High).
16	SDATA	O	Serial data output pin. Data is number two's complement and the MSB is output first. Goes low after 16/18 bits are output. Low when the power is down (PD : High).
17	FSYNC	I/O	Frame synchronization clock pin. Slave mode : SDATA output is enabled when the pin is high. Master mode : The 2 fs clock is output. High when 16-bit data is output. The two low-order bits are low when 18-bit output is selected. Low when the power is down (PD : High).
18	VDP+	–	Digital section power supply pin (+5V).
19	DGND	–	Digital section ground pin.
20	CLK	I	Master clock input pin. When CMODE is high, CLK : 384 fs. When CMODE is low, CLK : 256 fs.
21, 22	TST3, TST4	–	Test pin. Open or connect to DGND.

SEMICONDUCTOR DATA

Pin No.	Pin name	I/O	Function
23	NC	–	
24	VDB+	–	Digital section power supply pin (+5V). (Silicon PCB potential)
25	NC	–	
26	VREF	O	Reference voltage output pin (VA+) – 2.6V. Output based on VA+. Normally connect this output to the VREFIN pin
27	AINR–	I	Right-channel analog inverted output pin.
28	AINR+	I	Right-channel analog non-inverted output pin.

DC/AC Converter : PCM69AU (TX-RX Unit IC34)

■ Terminal connection diagram

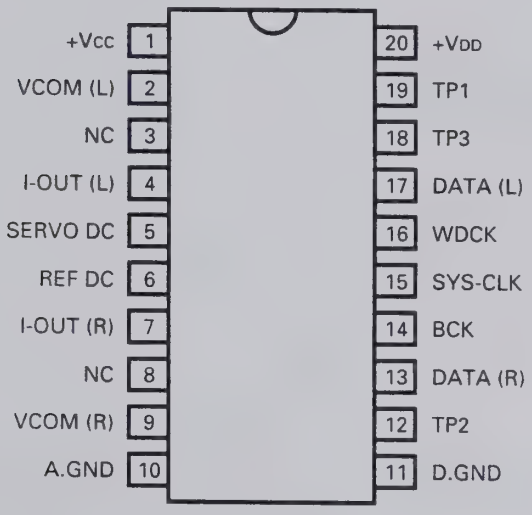

■ Terminal functions

Pin No.	Pin name	Function
1	+VCC	Analog Positive power supply
2	VCOM (L)	Lch V common
3	NC	
4	I-OUT (L)	Lch current output
5	SERVO DC	Servo filter
6	REF DC	Reference filter
7	I-OUT (R)	Rch current output
8	NC	
9	VCOM (R)	Rch V common
10	A. GND	Analog common
11	D. GND	digital common
12	TP2	Test pin 2
13	DATA (R)	Rch data input
14	BCK	Bit clock input
15	SYS-CLK	System clock input
16	WDCK	Word clock input
17	DATA (L)	Lch data input
18	TP3	Test pin 3
19	TP1	Test pin 1
20	+VDD	Digital positive power supply

PARTS LIST

CAPACITORS

CC 45 TH 1H 220 J
1 2 3 4 5 6

1 = Type ... ceramic, electrolytic, etc.
2 = Shape ... round, square, ect.
3 = Temp. coefficient
4 = Voltage rating
5 = Value
6 = Tolerance

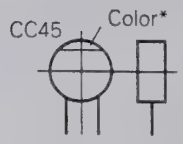

• Capacitor value

010 = 1pF
100 = 10pF
101 = 100pF
102 = 1000pF = 0.001µF
103 = 0.01µF

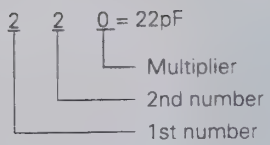

• Temperature coefficient

1st Word	C	L	P	R	S	T	U
Color*	Black	Red	Orange	Yellow	Green	Blue	Violet
ppm/°C	0	–80	–150	–220	–330	–470	–750

2nd Word	G	H	J	K	L
ppm/°C	±30	±60	±120	±250	±500

Example : CC45TH = –470 ± 60ppm/°C

• Tolerance

Code	C	D	G	J	K	M	X	Z	P	No code
(%)	±0.25	±0.5	±2	±5	±10	±20	+40 –20	+80 –20	+100 –0	More than 10µF – 10 ~ +50 Less than 4.7µF –10 ~ +75

Less than 10pF

Code	B	C	D	F	G
(pF)	±0.1	±0.25	±0.5	±1	±2

• Voltage rating

1st word \ 2nd word	A	B	C	D	E	F	G	H	J	K	V
0	1.0	1.25	1.6	2.0	2.5	3.15	4.0	5.0	6.3	8.0	–
1	10	12.5	16	20	25	31.5	40	50	63	80	35
2	100	125	160	200	250	315	400	500	630	800	–
3	1000	1250	1600	2000	2500	3150	4000	5000	6300	8000	–

• Chip capacitors (Refer to the table above except dimension)

(EX) CC 73 F SL 1H 000 J
1 2 3 4 5 6 7
(Chip) (CH, RH, UJ, SL)

(EX) CK 73 F F 1H 000 Z
1 2 3 4 5 6 7
(Chip) (B, F)

RESISTORS

• Chip resistor (Carbon)

(EX) RD 73 E B 2B 000 J
1 2 3 4 5 6 7
(Chip) (B,F)

• Carbon resistor (Normal type)

(EX) RD 14 B B 2C 000 J
1 2 3 4 5 6 7

1 = Type ... ceramic, electrolytic, etc.
2 = Shape ... round, square, ect.
3 = Dimension
4 = Temp. coefficient
5 = Voltage rating
6 = Value
7 = Tolerance

Dimension

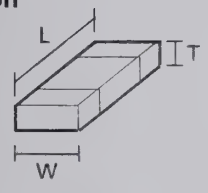

• Dimension (Chip capacitor)

Dimension code	L	W	T
Empty	5.6 ± 0.5	5.0 ± 0.5	Less than 2.0
E	3.2 ± 0.2	1.6 ± 0.2	Less than 1.25
F	2.0 ± 0.3	1.25 ± 0.2	Less than 1.25

• Dimension (Chip resistor)

Dimension code	L	W	T	Wattage
E	3.2 ± 0.2	1.6 ± 0.2	0.57	2B
F	2.0 ± 0.3	1.25 ± 0.2	0.45	2A

Rating wattage

Code	Wattage	Code	Wattage	Code	Wattage
2A	1/10W	2E	1/4W	3A	1W
2B	1/8W	2H	1/2W	3D	2W
2C	1/6W				

PARTS LIST

*New Parts. ⚠ indicates safety critical components.
Parts without **Parts No.** are not supplied.
Les articles non mentionnes dans le **Parts No.** ne sont pas fournis.
Teile ohne **Parts No.** werden nicht geliefert.

L : Scandinavia **K** : USA **P** : Canada
Y : PX (Far East, Hawaii) **T** : England **E** : Europe
Y : AAFES (Europe) **X** : Australia **M** : Other Areas

Ref. No.	Address	New parts	Parts No.	Description	Destination
TS-870S					
1	1B	*	A01-2097-01	METALLIC CABINET (UPPER)	
2	3B	*	A01-2098-01	METALLIC CABINET (LOWER)	
33	3A,2D	*	A62-0382-02	PANEL ASSY	
3	2C	*	A62-0384-02	PANEL	
4	2D	*	B10-1227-03	FRONT GLASS	
5	2D	*	B11-1123-04	REFLECTOR	
6	1E	*	B38-0736-05	DISPLAY ASSY	
7	2B		B42-3343-04	S/NO LABBL	
8	3N		B42-5526-04	STICKER	K
9	2C		B43-1045-04	BADGE (KENWOOD)	
10	2C	*	B43-1101-04	BADGE (DSP)	
11	3N		B44-2163-04	UPC CORD LABEL	
12	1O		B46-0310-03	WARRNTY CARD	EE2E3E9
12	1O		B46-0410-40	WARRNTY CARD	K
12	1O		B46-0422-00	WARRNTY CARD	P
13	1O	*	B62-0542-00	INSTRUCTION MANUAL (ENGLISH)	
14	1O	*	B62-0543-00	INSTRUCTION MANUAL (SPANISH)	MM2E2E3
15	1O	*	B62-0544-00	INSTRUCTION MANUAL (NETHERLAND)	MM2E2E3
16	1O	*	B62-0545-00	INSTRUCTION MANUAL (FRENCH)	PMM2
16	1O	*	B62-0545-00	INSTRUCTION MANUAL (FRENCH)	E2E3E9
17	1O	*	B62-0546-00	INSTRUCTION MANUAL (GERMAN)	E
18	1O	*	B62-0547-00	INSTRUCTION MANUAL (ITALIAN)	E
19	2B	*	B72-0911-04	MODEL NAME PLATE	KMM2XP
19	2B	*	B72-0912-04	MODEL NAME PLATE	EE2E3E9
20	1H		E04-0167-05	RF COAXIAL CABLE RECEPTACLE (M)	
21	1N		E07-0751-05	DIN PLUG (7P) ACSY	
22	1N		E07-1351-05	DIN PLUG (13P) ACSY	
23	1H		E23-0992-04	EARTH LUG (ANT)	
24	1N	*	E30-3157-15	DC CORD ACSY	
W51	2K,3K		E31-3433-05	LEAD WIRE WITH MINIPIN PLUG	
W52	3I,4K		E37-0062-05	LEAD WIRE WITH MINIPIN PLUG	
W53	2I,4K	*	E37-0518-05	LEAD WIRE WITH MINIPIN PLUG	
W54	1I,2I	*	E37-0519-05	LEAD WIRE WITH MINIPIN PLUG	
W56	1J,2K	*	E37-0521-05	LEAD WIRE WITH MINIPIN PLUG	
W57	1I,4K	*	E37-0522-05	LEAD WIRE WITH MINIPIN PLUG	
W58	1I	*	E37-0523-05	FLAT CABLE	
W59	2I,1J	*	E37-0524-05	FLAT CABLE	
W60	2A	*	E37-0526-05	FLAT CABLE	
W61	2A	*	E37-0527-05	FLAT CABLE	
W62	3I	*	E37-0528-05	FLAT CABLE	
W63-1	4J	*	E37-0529-05	FLAT CABLE	
W63-2	3I,4I	*	E37-0529-05	FLAT CABLE	
W64	4J	*	E37-0530-05	FLAT CABLE	
W65	3I	*	E37-0531-05	FLAT CABLE	
W66	3I,4I	*	E37-0532-05	FLAT CABLE	
W67	2A	*	E37-0533-05	FLAT CABLE	
W68	2A	*	E37-0534-05	FLAT CABLE	
W69	2I,4I	*	E37-0535-05	LEAD WIRE WITH MINIPIN PLUG	
W70	2A	*	E37-0537-05	LEAD WIRE WITH CONNECTOR	
W71	1I,1J	*	E37-0538-05	LEAD WIRE WITH CONNECTOR	
W72	1I,4K	*	E37-0540-05	LEAD WIRE WITH CONNECTOR	
W73	1I,1J	*	E37-0541-15	LEAD WIRE WITH CONNECTOR	
W74	1K	*	E37-0542-05	LEAD WIRE WITH CONNECTOR	

Ref. No.	Address	New parts	Parts No.	Description	Destination
W75	2J	*	E37-0543-05	LEAD WIRE WITH CONNECTOR	
W76	2A	*	E37-0547-15	LEAD WIRE WITH CONNECTOR (SP)	
W77	2J	*	E37-0548-05	LEAD WIRE WITH CONNECTOR	
W78	2I,4I	*	E37-0549-05	LEAD WIRE WITH CONNECTOR	
W79	2A	*	E37-0550-15	LEAD WIRE WITH CONNECTOR	
W80	2I,4J	*	E37-0551-05	LEAD WIRE WITH CONNECTOR	
W81	1I,4I	*	E37-0552-05	LEAD WIRE WITH CONNECTOR	
W82	2K,3K	*	E37-0569-05	LEAD WIRE WITH MINIPIN PLUG	
W83	–	*	E37-0570-05	LEAD WIRE WITH CONNECTOR (VS-2)	
26	1N		F05-2531-05	FUSE (25A/32V) ACSY	
27	1N		F06-4029-05	FUSE (4A/250V) ACSY	
28	2G	*	F09-0449-05	FAN MOTOR	
29	3G		F10-1206-04	SHIELDING COVER (EARTH SPRING)	
30	2B,1G		F10-1468-13	SHIELDING COVER (FINAL)	
31	1G		G02-0574-04	FLAT SPRING (AVR)	
32	2G	*	G02-0767-04	FLAT SPRING (THERMMISTOR)	
34	1A		G10-0697-04	FIBROUS SHEET (SP)	
35	1D		G10-0702-04	FIBROUS SHEET (SUB 2)	
36	1A		G10-0703-04	FIBROUS SHEET (CASE)	
39	1B		G13-0934-04	CUSHION (UPPER CASE)	
40	2G		G13-1310-04	CUSHION (FAN)	
41	4F	*	G13-1327-04	CUSHION (DRU-3)	
42	2D	*	G13-1480-04	CUSHION (KNOB)	
43	2D	*	G13-1481-04	CUSHION (KNOB)	
44	2D	*	G13-1482-04	CUSHION (KNOB)	
45	2D	*	G13-1483-04	CUSHION (KNOB)	
46	1A	*	G13-1498-04	CUSHION (SP)	
47	3B	*	G13-1511-04	CUSHION (LOWER CASE)	
50	2N	*	H10-2791-01	POLYSTYRENE FOAMED FIXTURE (F)	
51	2O	*	H10-2792-11	POLYSTYRENE FOAMED FIXTURE (R)	
52	1N	*	H13-0963-04	CARTON BOARD	
53	2O		H20-1437-03	PROTECTION COVER	
54	1N		H25-0029-04	BAG (FUSE)	
55	1N		H25-0079-04	BAG (MIC)	
56	1N		H25-0708-04	BAG (DC CORD)	
57	2O	*	H52-0730-02	ITEM CARTON CASE	
58	3O	*	H62-0641-03	OUTER PACKING CASE	
59	3B		J02-0049-14	FOOT (REAR)	
60	1A,3A		J02-0441-05	FOOT (SIDE)	
61	3A	*	J02-0474-05	FOOT (FRONT)	
62	2G		J21-4326-03	HARDWARE FIXTURE (FAN)	
63	1D	*	J21-4496-05	HARDWARE FIXTURE (PHONE JACK)	
64	2D		J31-0141-04	COLLAR (MIC)	
65	2H	*	J32-0923-04	HEXAGON BOSS	
–			J61-0307-05	BAND	
70	1B		K01-0416-05	HANDLE ASSY	
71	2C	*	K21-1102-04	KNOB (MAIN : WITH SCREW)	
72	2C	*	K29-4966-04	KNOB RING (MAIN)	
73	2D	*	K29-4967-03	KNOB (FILTER)	
74	2C	*	K29-4968-03	KNOB (M.CH,RIT : WITH SPRING)	
75	2C	*	K29-4969-03	KNOB (INSIDE)	
76	2C	*	K29-4970-03	KNOB (OUTSIDE)	
77	1C	*	K29-4978-03	KNOB (POWER)	
78	1D	*	K29-4979-03	KNOB (UP/DOWN)	

PARTS LSIT

TS-870S
RF UNIT (X44-3210-00)

Ref. No.	Address	New parts	Parts No.	Description	Destination
79	1C	*	K29-4980-03	KNOB (ANT, etc.)	
80	1D	*	K29-4981-03	KNOB (LED)	
81	1C,1D	*	K29-4982-03	KNOB (AT TUNE, etc.)	
82	1D	*	K29-4983-03	KNOB (LED)	
83	1C	*	K29-4984-03	KNOB (QUICK MEMO)	
84	1C	*	K29-4985-03	KNOB (LSB/USB)	
85	1C	*	K29-4986-03	KNOB (CW/-R)	
86	1C	*	K29-4987-03	KNOB (FSK/-R)	
87	1C	*	K29-4988-03	KNOB (FM/AM)	
88	1D	*	K29-4989-03	KNOB (AUTO NOTCH)	
89	1D	*	K29-4990-03	KNOB (BEAT CANCEL)	
90	1D	*	K29-4991-03	KNOB (N.R)	
91	1D	*	K29-4992-03	KNOB (TX EQ.)	
A	1H		N09-0372-04	SCREW (DC)	
B	1H		N09-0682-04	SCREW (GND)	
C	3F		N09-2051-05	SCREW	X
D	1H		N11-0040-46	FLANGE NUT (GND)	
E	1H		N14-0509-05	NUT (GND)	
F	1H		N15-1040-46	FLAT WASHER (GND)	
G	1D,1E		N32-2606-46	FLAT HEAD SCREW	
H	2A,3A		N32-3006-46	FLAT HEAD SCREW (SUB PANEL)	
I	1B,3B		N33-3006-41	OVAL HEAD SCREW (CASE)	
J	2A,2F		N87-2606-46	BRAZIER HEAD SCREW (UNIT,RL)	
K	1A,1H		N87-3006-46	BRAZIER HEAD SCREW (AT,FAN)	
L	2G,2H		N87-3008-46	BRAZIER HEAD SCREW	
M	2B,1G		N88-2608-46	FLAT HEAD SCREW (FINAL)	
N	2D		N90-3008-46	TP HEAD MACHIN SCREW (PANEL)	
P	3A,3B		N91-3010-46	TP HEAD TAPPING SCREW (FOOT)	
SP	1A		T07-0252-15	LOUDSPEAKER (8 ohm 1W)	
MIC	1N		T91-0352-15	MICROPHONE ACSY	
93	1E		W02-1836-05	ENCODER	
BATT	2A	*	W09-0873-05	LITHIUM CELL (3V 220MAh)	

RF UNIT (X44-3210-00)

C1			CK73FB1H103K	CHIP C	0.010UF	K
C2			CC73FCH1H121J	CHIP C	120PF	J
C3			CK73FF1C105Z	CHIP C	1.0UF	Z
C4,5			CK73FB1H103K	CHIP C	0.010UF	K
C6			CK73FB1E103K	CHIP C	0.010UF	K
C7			CK73FB1H103K	CHIP C	0.010UF	K
C8			CK73FB1H102K	CHIP C	1000PF	K
C10			CK73FB1H103K	CHIP C	0.010UF	K
C14			CK73FB1E103K	CHIP C	0.010UF	K
C15			CK73FF1C105Z	CHIP C	1.0UF	Z
C16			CK73FF1E104Z	CHIP C	0.10UF	Z
C17			CK73FF1C105Z	CHIP C	1.0UF	Z
C18			CK73FB1E103K	CHIP C	0.010UF	K
C19			CK73FB1H182K	CHIP C	1800PF	K
C21			CK73FB1H682K	CHIP C	6800PF	K
C22			CK73FB1H182K	CHIP C	1800PF	K
C23			CK73FF1E104Z	CHIP C	0.10UF	Z
C27			CK73FF1E104Z	CHIP C	0.10UF	Z
C28			CE04EW1C100M	ELECTRO	10UF	16WV
C29-31			CK73FF1E104Z	CHIP C	0.10UF	Z
C32			CE04EW1C100M	ELECTRO	10UF	16WV
C33			CK73FF1C105Z	CHIP C	1.0UF	Z

Ref. No.	Address	New parts	Parts No.	Description			Destination
C34			CK73FF1E104Z	CHIP C	0.10UF	Z	
C35			CC73FCH1H050C	CHIP C	5.0PF	C	
C36			CK73FB1H103K	CHIP C	0.010UF	K	
C39,40			CK73FB1E103K	CHIP C	0.010UF	K	
C47			CK73FB1H103K	CHIP C	0.010UF	K	
C48			CK73FB1H223K	CHIP C	0.022UF	K	
C49			CK73FB1H103K	CHIP C	0.010UF	K	
C50			CK73FF1E104Z	CHIP C	0.10UF	Z	
C51			CK73FF1C105Z	CHIP C	1.0UF	Z	
C52			CK73FB1H222K	CHIP C	2200PF	K	
C53			CK73FB1H682K	CHIP C	6800PF	K	
C54			CK73FB1H222K	CHIP C	2200PF	K	
C55			CK73FF1E104Z	CHIP C	0.10UF	Z	
C56			CK73FF1C105Z	CHIP C	1.0UF	Z	
C57			CK73FB1H472K	CHIP C	4700PF	K	
C58			CK73FF1E104Z	CHIP C	0.10UF	Z	
C59			CK73FF1C105Z	CHIP C	1.0UF	Z	
C60			CC73FSL1H821J	CHIP C	820PF	J	
C61			CK73FF1C105Z	CHIP C	1.0UF	Z	
C62			CK73FB1H472K	CHIP C	4700PF	K	
C63			CK73FF1E104Z	CHIP C	0.10UF	Z	
C64			CK73FB1H222K	CHIP C	2200PF	K	
C65			CK73FF1E104Z	CHIP C	0.10UF	Z	
C66			CK73FF1C105Z	CHIP C	1.0UF	Z	
C67			CK73FB1H561K	CHIP C	560PF	K	
C68			CK73FF1C105Z	CHIP C	1.0UF	Z	
C69			CK73FB1H222K	CHIP C	2200PF	K	
C70			CK73FF1E104Z	CHIP C	0.10UF	Z	
C71			CK73FB1H102K	CHIP C	1000PF	K	
C72			CK73FF1E104Z	CHIP C	0.10UF	Z	
C73			CK73FF1C105Z	CHIP C	1.0UF	Z	
C74			CC73FSL1H271J	CHIP C	270PF	J	
C75			CK73FF1C105Z	CHIP C	1.0UF	Z	
C76			CK73FB1H102K	CHIP C	1000PF	K	
C77,78			CK73FF1E104Z	CHIP C	0.10UF	Z	
C80			CK73FF1C105Z	CHIP C	1.0UF	Z	
C81			CC73FCH1H050C	CHIP C	5.0PF	C	
C83			CC73FCH1H050C	CHIP C	5.0PF	C	
C85			CC73FCH1H050C	CHIP C	5.0PF	C	
C87			CK73FF1C105Z	CHIP C	1.0UF	Z	
C88			CK73FF1E104Z	CHIP C	0.10UF	Z	
C89			CK73FB1H102K	CHIP C	1000PF	K	
C90			CK73FF1E104Z	CHIP C	0.10UF	Z	
C91			CK73FF1C105Z	CHIP C	1.0UF	Z	
C92			CC73FCH1H121J	CHIP C	120PF	J	
C93			CK73FF1C105Z	CHIP C	1.0UF	Z	
C94			CK73FB1H102K	CHIP C	1000PF	K	
C95			CK73FF1E104Z	CHIP C	0.10UF	Z	
C96			CK73FB1H102K	CHIP C	1000PF	K	
C97			CK73FF1E104Z	CHIP C	0.10UF	Z	
C98			CK73FF1C105Z	CHIP C	1.0UF	Z	
C99			CC73FCH1H820J	CHIP C	82PF	J	
C100			CK73FF1C105Z	CHIP C	1.0UF	Z	
C101			CK73FB1H102K	CHIP C	1000PF	K	
C102,103			CK73FF1E104Z	CHIP C	0.10UF	Z	
C105			CK73FF1C105Z	CHIP C	1.0UF	Z	
C106			CC73FCH1H040C	CHIP C	4.0PF	C	
C108			CC73FCH1H040C	CHIP C	4.0PF	C	
C110			CK73FF1C105Z	CHIP C	1.0UF	Z	

PARTS LIST

RF UNIT (X44-3210-00)

Ref. No.	Address	New parts	Parts No.	Description			Destination
C111			CK73FF1E104Z	CHIP C	0.10UF	Z	
C112			CC73FSL1H391J	CHIP C	390PF	J	
C113			CK73FF1E104Z	CHIP C	0.10UF	Z	
C114			CK73FF1C105Z	CHIP C	1.0UF	Z	
C115			CC73FCH1H680J	CHIP C	68PF	J	
C116			CK73FF1C105Z	CHIP C	1.0UF	Z	
C117			CC73FSL1H151J	CHIP C	150PF	J	
C118,119			CK73FF1E104Z	CHIP C	0.10UF	Z	
C121			CK73FF1C105Z	CHIP C	1.0UF	Z	
C122			CC73FCH1H050C	CHIP C	5.0PF	C	
C124			CC73FCH1H050C	CHIP C	5.0PF	C	
C126			CK73FF1C105Z	CHIP C	1.0UF	Z	
C127			CK73FF1E104Z	CHIP C	0.10UF	Z	
C128			CC73FCH1H221J	CHIP C	220PF	J	
C129			CK73FF1E104Z	CHIP C	0.10UF	Z	
C130			CK73FF1C105Z	CHIP C	1.0UF	Z	
C131			CC73FCH1H330J	CHIP C	33PF	J	
C132			CK73FF1C105Z	CHIP C	1.0UF	Z	
C133			CK73FF1E104Z	CHIP C	0.10UF	Z	
C134			CK73FB1H103K	CHIP C	0.010UF	K	
C135			CC73FCH1H121J	CHIP C	120PF	J	
C136			CK73FF1E104Z	CHIP C	0.10UF	Z	
C137			CC73FSL1H221J	CHIP C	220PF	J	
C138			CK73FB1E103K	CHIP C	0.010UF	K	
C139			CK73FF1E104Z	CHIP C	0.10UF	Z	
C140,141			CK73FB1E103K	CHIP C	0.010UF	K	
C142			CK73FF1E104Z	CHIP C	0.10UF	Z	
C143			CC73FCH1H390J	CHIP C	39PF	J	
C144,145			CK73FB1E103K	CHIP C	0.010UF	K	
C146,147			CK73FF1E104Z	CHIP C	0.10UF	Z	
C148			CK73FB1E103K	CHIP C	0.010UF	K	
C149			CK73FF1E104Z	CHIP C	0.10UF	Z	
C150,151			CK73FF1C105Z	CHIP C	1.0UF	Z	
C152,153			CK73FF1E104Z	CHIP C	0.10UF	Z	
C154			CC73FCH1H101J	CHIP C	100PF	J	
C155			CC73FCH1H150J	CHIP C	15PF	J	
C156			CK73FB1E103K	CHIP C	0.010UF	K	
C157			CC73FSL1H221J	CHIP C	220PF	J	
C158			CK73FB1H471K	CHIP C	470PF	K	
C159			CK73FB1H102K	CHIP C	1000PF	K	
C160			CC73FCH1H470J	CHIP C	47PF	J	
C161			CC73FCH1H820J	CHIP C	82PF	J	
C162			CK73FF1E104Z	CHIP C	0.10UF	Z	
C163			CK73FB1E103K	CHIP C	0.010UF	K	
C164			CC73FSL1H471J	CHIP C	470PF	J	
C165			CK73FB1E103K	CHIP C	0.010UF	K	
C166,167			CK73FF1E104Z	CHIP C	0.10UF	Z	
C168			CK73FB1E103K	CHIP C	0.010UF	K	
C169			CC73FCH1H680J	CHIP C	68PF	J	
C170			CK73FF1E104Z	CHIP C	0.10UF	Z	
C171			CC73FCH1H470J	CHIP C	47PF	J	
C172,173			CK73FB1E103K	CHIP C	0.010UF	K	
C174			CC73FSL1H471J	CHIP C	470PF	J	
C175			CC73FCH1H470J	CHIP C	47PF	J	
C176			CE04EW1C470M	ELECTRO	47UF	16WV	
C177			CC73FCH1H050C	CHIP C	5.0PF	C	
C178			CC73FCH1H680J	CHIP C	68PF	J	
C179			CK73FF1E104Z	CHIP C	0.10UF	Z	
C180			CC73FCH1H020C	CHIP C	2.0PF	C	

Ref. No.	Address	New parts	Parts No.	Description			Destination
C181			CC73FCH1H050C	CHIP C	5.0PF	C	
C182			CK73FB1E103K	CHIP C	0.010UF	K	
C184			CC73FCH1H050C	CHIP C	5.0PF	C	
C185			CC73FCH1H220J	CHIP C	22PF	J	
C186			CC73FCH1H050C	CHIP C	5.0PF	C	
C187			CC73FCH1H1R5C	CHIP C	1.5PF	C	
C188			CC73FCH1H220J	CHIP C	22PF	J	
C189			CC73FCH1H0R5C	CHIP C	0.5PF	C	
C190			CK73FB1E103K	CHIP C	0.010UF	K	
C191			CC73FSL1H681J	CHIP C	680PF	J	
C192,193			CK73FB1H102K	CHIP C	1000PF	K	
C194			CC73FSL1H331J	CHIP C	330PF	J	
C195			CC73FSL1H471J	CHIP C	470PF	J	
C196			CK73FB1H102K	CHIP C	1000PF	K	
C197			CK73FB1E103K	CHIP C	0.010UF	K	
C198			CC73FCH1H020C	CHIP C	2.0PF	C	
C199			CK73FB1E103K	CHIP C	0.010UF	K	
C201-206			CK73FB1E103K	CHIP C	0.010UF	K	
C207			CC73FCH1H470J	CHIP C	47PF	J	
C208			CK73FF1E104Z	CHIP C	0.10UF	Z	
C209			CK73FB1H102K	CHIP C	1000PF	K	
C211,212			CK73FF1E104Z	CHIP C	0.10UF	Z	
C214			CK73FB1E103K	CHIP C	0.010UF	K	
C215			CK73FF1E104Z	CHIP C	0.10UF	Z	
C216			CE04EW1C100M	ELECTRO	10UF	16WV	
C217			CK73FF1E104Z	CHIP C	0.10UF	Z	
C218			CC73FCH1H470J	CHIP C	47PF	J	
C219			CK73FF1E104Z	CHIP C	0.10UF	Z	
C220			CE04EW1H010M	ELECTRO	1.0UF	50WV	
C221-223			CK73FF1E104Z	CHIP C	0.10UF	Z	
C224			CK73FB1E103K	CHIP C	0.010UF	K	
C225			CK73FB1H102K	CHIP C	1000PF	K	
C226-228			CK73FB1E103K	CHIP C	0.010UF	K	
C229			CC73FCH1H050C	CHIP C	5.0PF	C	
C230			CK73FB1E103K	CHIP C	0.010UF	K	
C231			CC73FCH1H220J	CHIP C	22PF	J	
C232			CK73FF1E104Z	CHIP C	0.10UF	Z	
C233			CK73FB1H102K	CHIP C	1000PF	K	
C234			CK73FF1E104Z	CHIP C	0.10UF	Z	
C236			CK73FB1E103K	CHIP C	0.010UF	K	
C237			CC73FCH1H220J	CHIP C	22PF	J	
C238			CK73FB1E103K	CHIP C	0.010UF	K	
C239			CK73FB1H471K	CHIP C	470PF	K	
C240,241			CK73FB1E103K	CHIP C	0.010UF	K	
C242			CC73FSL1H471J	CHIP C	470PF	J	
C243,244			CK73FB1E103K	CHIP C	0.010UF	K	
C245			CC73FSL1H471J	CHIP C	470PF	J	
C246			CC73FCH1H010C	CHIP C	1.0PF	C	
C247			CC73FSL1H471J	CHIP C	470PF	J	
C248			CK73FB1E103K	CHIP C	0.010UF	K	
C249			CC73FCH1H0R5C	CHIP C	0.5PF	C	
C250			CC73FCH1H010C	CHIP C	1.0PF	C	
C251-253			CK73FB1E103K	CHIP C	0.010UF	K	
C254			CK73FF1E104Z	CHIP C	0.10UF	Z	
C256,257			CK73FB1E103K	CHIP C	0.010UF	K	
C260			CK73FB1E103K	CHIP C	0.010UF	K	
C262,263			CK73FB1E103K	CHIP C	0.010UF	K	
C265-273			CK73FB1E103K	CHIP C	0.010UF	K	
C274			CC73FCH1H180J	CHIP C	18PF	J	

PARTS LSIT

RF UNIT (X44-3210-00)

Ref. No.	Address	New parts	Parts No.	Description			Destination
C275			CC73FCH1H150J	CHIP C	15PF	J	
C276			CC73FCH1H180J	CHIP C	18PF	J	
C277-279			CK73FB1E103K	CHIP C	0.010UF	K	
C280			CC73FCH1H101J	CHIP C	100PF	J	
C281,282			CC73FCH1H220J	CHIP C	22PF	J	
C283			CC73FCH1H330J	CHIP C	33PF	J	
C285			CK73FB1E223K	CHIP C	0.022UF	K	
C286			CE04EW1H010M	ELECTRO	1.0UF	50WV	
C287			CE04EW1C100M	ELECTRO	10UF	16WV	
C288			CK73FB1H473K	CHIP C	0.047UF	K	
C289			CE04EW1C100M	ELECTRO	10UF	16WV	
C290			CK73FB1E103K	CHIP C	0.010UF	K	
C291			CE04EW1HR47M	ELECTRO	0.47UF	50WV	
C292			CK73FB1E103K	CHIP C	0.010UF	K	
C293			CC73FCH1H101J	CHIP C	100PF	J	
C294			CK73FF1E104Z	CHIP C	0.10UF	Z	
C295-298			CK73FB1E103K	CHIP C	0.010UF	K	
C299,300			CK73FB1H103K	CHIP C	0.010UF	K	
C301			CK73FB1H102K	CHIP C	1000PF	K	
C302			CK73FB1H103K	CHIP C	0.010UF	K	
C303			CK73FB1H102K	CHIP C	1000PF	K	
C304			CK45FE2H222P	CERAMIC	2200PF	P	
C305			CK73FB1H103K	CHIP C	0.010UF	K	
C306,307			CK73FB1H102K	CHIP C	1000PF	K	
C308			CK73FB1H103K	CHIP C	0.010UF	K	
C310			CK73FB1H103K	CHIP C	0.010UF	K	
C312			CE04EW1C100M	ELECTRO	10UF	16WV	
C313,314			CK73FB1H103K	CHIP C	0.010UF	K	
C315			CE04EW1C100M	ELECTRO	10UF	16WV	
C316-327			CK73FB1H102K	CHIP C	1000PF	K	
C328-331			CK73FB1E103K	CHIP C	0.010UF	K	
C332			CK73FB1H102K	CHIP C	1000PF	K	
C333			CK73FB1E103K	CHIP C	0.010UF	K	
C334			CC73FCH1H330J	CHIP C	33PF	J	
C335			CK73FB1E103K	CHIP C	0.010UF	K	
C338			CC73FSL1H221J	CHIP C	220PF	J	
C339,340			CC73FCH1H220J	CHIP C	22PF	J	
C341-346			CK73FB1E103K	CHIP C	0.010UF	K	
C347,348			CC73FCH1H100D	CHIP C	10PF	D	
C350			C92-0004-05	CHIP-TAN	1.0UF	16WV	
C500			CK73FB1E103K	CHIP C	0.010UF	K	
C501			CE04NW1C100M	ELECTRO	10UF	16WV	
C502			CK73FB1E103K	CHIP C	0.010UF	K	
C503			CE04NW1C100M	ELECTRO	10UF	16WV	
C504			CK73FB1E103K	CHIP C	0.010UF	K	
C505			CE04EW1C100M	ELECTRO	10UF	16WV	
C506			CK73FB1E103K	CHIP C	0.010UF	K	
C507			CE04NW1C100M	ELECTRO	10UF	16WV	
C508			CK73FB1E103K	CHIP C	0.010UF	K	
C509			CE04NW1C100M	ELECTRO	10UF	16WV	
C510			CK73FB1E103K	CHIP C	0.010UF	K	
C511			CE04EW1C100M	ELECTRO	10UF	16WV	
C512,513			CK73FB1E103K	CHIP C	0.010UF	K	
C514			C92-0516-05	CHIP-TAN	4.7UF	16WV	
C515			CC73FSL1H271J	CHIP C	270PF	J	
C516			CC73FSL1H561J	CHIP C	560PF	J	
C517			CK73FB1E103K	CHIP C	0.010UF	K	
C518			CC73FSL1H271J	CHIP C	270PF	J	
C519,520			CK73FB1E103K	CHIP C	0.010UF	K	

Ref. No.	Address	New parts	Parts No.	Description			Destination
C521			CE04EW1C100M	ELECTRO	10UF	16WV	
C522			CK73FB1E103K	CHIP C	0.010UF	K	
C523			CC73FCH1H121J	CHIP C	120PF	J	
C524			CC73FSL1H181J	CHIP C	180PF	J	
C525			CC73FCH1H121J	CHIP C	120PF	J	
C526-530			CK73FB1E103K	CHIP C	0.010UF	K	
C531			CC73FCH1H560J	CHIP C	56PF	J	
C532			CC73FSL1H391J	CHIP C	390PF	J	
C533			CC73FCH1H390J	CHIP C	39PF	J	
C534			CC73FCH1H680J	CHIP C	68PF	J	
C535			CC73FCH1H390J	CHIP C	39PF	J	
C536			CC73FCH1H101J	CHIP C	100PF	J	
C537			CC73FCH1H680J	CHIP C	68PF	J	
C538			CC73FCH1H390J	CHIP C	39PF	J	
C539			CC73FCH1H070D	CHIP C	7.0PF	D	
C540			CC73FCH1H680J	CHIP C	68PF	J	
C541			CC73FCH1H220J	CHIP C	22PF	J	
C542			CC73FCH1H330J	CHIP C	33PF	J	
C543-545			CK73FB1E103K	CHIP C	0.010UF	K	
C546			CC73FCH1H121J	CHIP C	120PF	J	
C547			CE04EW1C470M	ELECTRO	47UF	16WV	
C548-555			CK73FB1E103K	CHIP C	0.010UF	K	
C556			CK73FB1H102K	CHIP C	1000PF	K	
C557			CC73FCH1H330J	CHIP C	33PF	J	
C558			CC73FCH1H0R5C	CHIP C	0.5PF	C	
C560			CC73FCH1H0R5C	CHIP C	0.5PF	C	
C561			CC73FCH1H330J	CHIP C	33PF	J	
C562-564			CK73FB1E103K	CHIP C	0.010UF	K	
C565			C92-0516-05	CHIP-TAN	4.7UF	16WV	
C566,567			CC73FCH1H470J	CHIP C	47PF	J	
C568			CC73FCH1H101J	CHIP C	100PF	J	
C569			CE04EW1C100M	ELECTRO	10UF	16WV	
C570,571			CK73FB1E103K	CHIP C	0.010UF	K	
C572			CC73FCH1H100D	CHIP C	10PF	D	
C573			CC73FCH1H050C	CHIP C	5.0PF	C	
C574-576			CK73FB1E103K	CHIP C	0.010UF	K	
C577			CK73FB1H331K	CHIP C	330PF	K	
C578			CC73FCH1H620J	CHIP C	62PF	J	
C579			CK73FB1H331K	CHIP C	330PF	K	
C581			CC73FCH1H820J	CHIP C	82PF	J	
C583			CK73FB1H103K	CHIP C	0.010UF	K	
C584			CE04EW1C100M	ELECTRO	10UF	16WV	
C585			CK73FB1H103K	CHIP C	0.010UF	K	
C586			CK73FB1H682K	CHIP C	6800PF	K	
C587			CK73FB1H123K	CHIP C	0.012UF	K	
C588			CK73FB1H682K	CHIP C	6800PF	K	
C591			CK73FB1H103K	CHIP C	0.010UF	K	
C593			CK73FB1H102K	CHIP C	1000PF	K	
C594			CC73FSL1H221J	CHIP C	220PF	J	
C595			CK73FB1H103K	CHIP C	0.010UF	K	
C596			CC73FCH1H0R5C	CHIP C	0.5PF	C	
C597			CC73FCH1H270J	CHIP C	27PF	J	
C598-602			CK73FB1H103K	CHIP C	0.010UF	K	
C603			CK73FB1H102K	CHIP C	1000PF	K	
C604			CK73FB1H103K	CHIP C	0.010UF	K	
C606			CC73FCH1H270J	CHIP C	27PF	J	
C618			CE04EW1C101M	ELECTRO	100UF	16WV	
C619			C92-0001-05	CHIP-TAN	0.10UF	35WV	
C620-623			CK73FB1H102K	CHIP C	1000PF	K	

PARTS LIST

RF UNIT (X44-3210-00)

Ref. No.	Address	New parts	Parts No.	Description			Destination
C624			CK73FB1E103K	CHIP C	0.010UF	K	
C625-628			CK73FB1H102K	CHIP C	1000PF	K	
C629			CE04EW1C101M	ELECTRO	100UF	16WV	
C630,631			CK73FB1E103K	CHIP C	0.010UF	K	
C630,631			CK73FB1E103K	CHIP C	0.010UF	K	
C632			CE04EW1C101M	ELECTRO	100UF	16WV	
C633			CC73FCH1H101J	CHIP C	100PF	J	
C634			CC73FCH1H180J	CHIP C	18PF	J	
C635			CK73FB1H102K	CHIP C	1000PF	K	
C636			CC73FCH1H330J	CHIP C	33PF	J	
C637			CC73FCH1H080D	CHIP C	8.0PF	D	
C638			CC73FCH1H120J	CHIP C	12PF	J	
C639			CC73FCH1H560J	CHIP C	56PF	J	
C640			CK73FB1H183K	CHIP C	0.018UF	K	
C641			CC73FCH1H120J	CHIP C	12PF	J	
C642			CK73FB1H102K	CHIP C	1000PF	K	
C643			CC73FCH1H330J	CHIP C	33PF	J	
C644			CC73FCH1H120J	CHIP C	12PF	J	
C645			CC73FCH1H150J	CHIP C	15PF	J	
C646			CC73FCH1H390J	CHIP C	39PF	J	
C647			CC73FCH1H100D	CHIP C	10PF	D	
C648			CK73FB1H102K	CHIP C	1000PF	K	
C649			CC73FCH1H160J	CHIP C	16PF	J	
C650			CC73FCH1H240J	CHIP C	24PF	J	
C651			CC73FCH1H150J	CHIP C	15PF	J	
C652			CC73FCH1H390J	CHIP C	39PF	J	
C653			CK73FB1H183K	CHIP C	0.018UF	K	
C654			CC73FCH1H040C	CHIP C	4.0PF	C	
C655			CK73FB1H102K	CHIP C	1000PF	K	
C656			CC73FCH1H150J	CHIP C	15PF	J	
C657			CC73FCH1H200J	CHIP C	20PF	J	
C658			CC73FCH1H160J	CHIP C	16PF	J	
C659,660			CK73FB1H102K	CHIP C	1000PF	K	
C661			CC73FCH1H100D	CHIP C	10PF	D	
C662			CC73FCH1H030C	CHIP C	3.0PF	C	
C663			CC73FCH1H020C	CHIP C	2.0PF	C	
C664			CC73FCH1H040C	CHIP C	4.0PF	C	
C665,666			CK73FB1H102K	CHIP C	1000PF	K	
C667			CK73FB1E103K	CHIP C	0.010UF	K	
C668			CK73FB1H102K	CHIP C	1000PF	K	
C669			CK73FB1E103K	CHIP C	0.010UF	K	
C670			CK73FB1H102K	CHIP C	1000PF	K	
C671			CC73FCH1H240J	CHIP C	24PF	J	
C672			CK73FB1H102K	CHIP C	1000PF	K	
C673			CC73FCH1H010C	CHIP C	1.0PF	C	
C674			CC73FCH1H240J	CHIP C	24PF	J	
C675			CK73FB1E103K	CHIP C	0.010UF	K	
C676			C92-0004-05	CHIP-TAN	1.0UF	16WV	
C677			CE04EW1C221M	ELECTRO	220UF	16WV	
C678			CK73FB1E103K	CHIP C	0.010UF	K	
C679			CQ92M1H822K	MYLAR	8200PF	K	
C680			C91-1083-05	FILM	0.47UF	63WV	
C681			CK73FB1H102K	CHIP C	1000PF	K	
C682,683			CK73FB1E103K	CHIP C	0.010UF	K	
C684			CK73FB1H103K	CHIP C	0.010UF	K	
C685,686			CK73FB1E103K	CHIP C	0.010UF	K	
C687			CC73FCH1H020C	CHIP C	2.0PF	C	
C688			CC73FCH1H1R5C	CHIP C	1.5PF	C	
C689			CC73FCH1H030C	CHIP C	3.0PF	C	

Ref. No.	Address	New parts	Parts No.	Description			Destination
C690			CC73FCH1H470J	CHIP C	47PF	J	
C691			CC73FCH1H270J	CHIP C	27PF	J	
C692-696			CK73FB1E103K	CHIP C	0.010UF	K	
C697			CE04EW1C100M	ELECTRO	10UF	16WV	
C698			CK73FB1H102K	CHIP C	1000PF	K	
C699			CK73FB1E103K	CHIP C	0.010UF	K	
C700			CK73FB1H102K	CHIP C	1000PF	K	
C701			CC73FCH1H330J	CHIP C	33PF	J	
C702			CC73FCH1H100D	CHIP C	10PF	D	
C703			CC73FCH1H680J	CHIP C	68PF	J	
C704,705			CK73FB1H103K	CHIP C	0.010UF	K	
C706			CE04EW1C470M	ELECTRO	47UF	16WV	
C707			CK73FB1H103K	CHIP C	0.010UF	K	
C708			CE04EW1C101M	ELECTRO	100UF	16WV	
C710			CK73FB1H102K	CHIP C	1000PF	K	
C711			CQ92M1H333K	MYLAR	0.033UF	K	
C712			C91-1083-05	FILM	0.47UF	63WV	
C713			CK73FB1H103K	CHIP C	0.010UF	K	
C714			C92-0516-05	CHIP-TAN	4.7UF	16WV	
C715,716			CK73FB1H102K	CHIP C	1000PF	K	
C717			CE04EW1C101M	ELECTRO	100UF	16WV	
C719			CC73FCH1H020C	CHIP C	2.0PF	C	
C721-726			CC73FCH1H270J	CHIP C	27PF	J	
C727,728			CC73FCH1H100D	CHIP C	10PF	D	
C729			CC73FCH1H020C	CHIP C	2.0PF	C	
C730-732			CK73FB1H102K	CHIP C	1000PF	K	
C744			CK73FB1H102K	CHIP C	1000PF	K	
C750-757			CC73FCH1H101J	CHIP C	100PF	J	
C758-761			CK73FB1H102K	CHIP C	1000PF	K	
C762			CC73FCH1H101J	CHIP C	100PF	J	
C770			CE04EW1C470M	ELECTRO	47UF	16WV	
C771			CK73FB1H103K	CHIP C	0.010UF	K	
C780			CE04EW1E470M	ELECTRO	47UF	25WV	
C781,782			CK73FF1E104Z	CHIP C	0.10UF	Z	
C783			CE04EW1C470M	ELECTRO	47UF	16WV	
C784			CE04EW1E470M	ELECTRO	47UF	25WV	
C785,786			CK73FF1E104Z	CHIP C	0.10UF	Z	
C787			CE04EW1C470M	ELECTRO	47UF	16WV	
C800			CC73FCH1H390J	CHIP C	39PF	J	
C801			CC73FCH1H151J	CHIP C	150PF	J	
C802			CC73FCH1H390J	CHIP C	39PF	J	
C803			CC73FCH1H050C	CHIP C	5.0PF	C	
C804			CK73FB1H103K	CHIP C	0.010UF	K	
C805			CC73FCH1H020C	CHIP C	2.0PF	C	
C806,807			CK73FB1H103K	CHIP C	0.010UF	K	
C808			C92-0004-05	CHIP-TAN	1.0UF	16WV	
C907-912			CK73FB1H102K	CHIP C	1000PF	K	
C914-926			CK73FB1H102K	CHIP C	1000PF	K	
TC506,507			C05-0377-05	TRIMMER CAPACITOR		10PF	
TC508,509			C05-0376-05	TRIMMER CAPACITOR		6PF	
TC800			C05-0344-05	TRIMMER CAPACITOR		30PF	
CN2			E04-0154-05	RF COAXIAL CABLE SOCKET			
CN4			E04-0154-05	RF COAXIAL CABLE SOCKET			
CN5,6			E04-0191-05	RF COAXIAL CABLE SOCKET			
CN7			E40-3238-05	PIN CONNECTOR (3P)			
CN10			E04-0154-05	RF COAXIAL CABLE SOCKET			
CN13		*	E40-5741-05	PIN CONNECTOR (8P)			
CN14		*	E40-5740-05	PIN CONNECTOR (20P)			

PARTS LSIT

RF UNIT (X44-3210-00)

Ref. No.	Address	New parts	Parts No.	Description	Destination
CN15-17			E04-0154-05	RF COAXIAL CABLE SOCKET	
CN500		*	E40-5740-05	PIN CONNECTOR (20P)	
CN501			E40-3237-05	PIN CONNECTOR (2P)	
CN502-505			E04-0154-05	RF COAXIAL CABLE SOCKET (2P)	
CN506			E40-3238-05	PIN CONNECTOR (3P)	
CN508			E40-5606-05	PIN CONNECTOR (3P)	
CN509			E40-5607-05	PIN CONNECTOR (4P)	
CN510			E23-0996-05	TERMINAL (TEST)	
CN800			E40-4463-05	PIN CONNECTOR	
CN801			E40-4464-05	PIN CONNECTOR	
CN901			E40-3300-05	PIN CONNECTOR (3P)	
CN903-907		*	E40-5743-05	FLAT CABLE CONNECTOR (6P)	
J1			E06-0752-05	DIN SOCKET	
J2,3			E13-0166-05	PIN JACK	
J901		*	E11-0462-05	PHONE JACK	
W1		*	E37-0546-05	LEAD WIRE WITH CONNECTOR	
W2		*	E37-0517-05	LEAD WIRE WITH MINIPIN PLUG	
101	2F		F11-1141-04	SHIELDING COVER	
A502	2F		F11-1140-04	SHIELDING CASE	
–			J30-0545-05	SPACER (TO XF1)	
–			J30-0563-05	SPACER (TO XF3, X800)	
CF500,501			L72-0343-05	CERAMIC FILTER (8.4MHZ)	
L1		*	L39-1254-05	COIL	
L2			L19-0324-05	TROIDAL COIL	
L3			L40-1021-14	SMALL FIXED INDUCTOR	
L7			L40-2701-14	SMALL FIXED INDUCTOR	
L8			L40-4791-14	SMALL FIXED INDUCTOR	
L9			L40-2701-14	SMALL FIXED INDUCTOR	
L10			L40-1015-48	SMALL FIXED INDUCTOR (100UH)	
L11			L19-0324-05	TROIDAL COIL	
L12			L40-1005-48	SMALL FIXED INDUCTOR (10UH)	
L13			L40-4705-48	SMALL FIXED INDUCTOR (47UH)	
L14,15			L40-1501-14	SMALL FIXED INDUCTOR	
L16			L40-1021-14	SMALL FIXED INDUCTOR	
L17,18			L40-5691-14	SMALL FIXED INDUCTOR	
L19			L40-1292-14	SMALL FIXED INDUCTOR	
L20			L40-8291-14	SMALL FIXED INDUCTOR	
L21,22			L40-1292-14	SMALL FIXED INDUCTOR	
L23			L40-5691-14	SMALL FIXED INDUCTOR	
L24			L40-1292-14	SMALL FIXED INDUCTOR	
L25			L40-1092-14	SMALL FIXED INDUCTOR	
L26			L40-3391-14	SMALL FIXED INDUCTOR	
L27			L40-1092-14	SMALL FIXED INDUCTOR	
L28-31			L34-4262-05	COIL	
L32			L40-3382-14	SMALL FIXED INDUCTOR	
L33			L40-2792-14	SMALL FIXED INDUCTOR	
L34			L40-3382-14	SMALL FIXED INDUCTOR	
L35			L40-2282-14	SMALL FIXED INDUCTOR	
L36			L40-2292-14	SMALL FIXED INDUCTOR	
L37			L40-2282-14	SMALL FIXED INDUCTOR	
L38-40			L34-4289-05	COIL	
L41			L40-2282-14	SMALL FIXED INDUCTOR	
L42			L40-1292-14	SMALL FIXED INDUCTOR	
L43			L40-2282-14	SMALL FIXED INDUCTOR	
L44-46		*	L34-4392-05	COIL	
L47			L40-2282-14	SMALL FIXED INDUCTOR	
L48			L40-1292-14	SMALL FIXED INDUCTOR	

Ref. No.	Address	New parts	Parts No.	Description	Destination
L49			L40-2282-14	SMALL FIXED INDUCTOR	
L50			L34-4264-05	COIL	
L51			L40-1021-14	SMALL FIXED INDUCTOR	
L52			L34-4265-05	COIL	
L53			L19-0324-05	TROIDAL COIL	
L54			L40-4785-48	SMALL FIXED INDUCTOR (470NH)	
L55			L19-0324-05	TROIDAL COIL	
L56			L40-4705-48	SMALL FIXED INDUCTOR (47UH)	
L57			L40-2785-48	SMALL FIXED INDUCTOR (270NH)	
L58			L40-2285-48	SMALL FIXED INDUCTOR (220NH)	
L59			L19-0324-05	TROIDAL COIL	
L60			L39-1255-05	COIL	
L61			L40-1285-48	SMALL FIXED INDUCTOR (120NH)	
L62			L39-1255-05	COIL	
L63			L40-1015-48	SMALL FIXED INDUCTOR (100NH)	
L64			L39-1255-05	COIL	
L65			L34-4222-05	COIL	
L67		*	L34-4394-05	COIL	
L68			L40-1015-48	SMALL FIXED INDUCTOR (100UH)	
L69			L40-2285-48	SMALL FIXED INDUCTOR (220NH)	
L70		*	L34-4393-05	COIL	
L71			L40-3395-48	SMALL FIXED INDUCTOR (3.3UH)	
L72		*	L34-4394-05	COIL	
L73			L40-2295-48	SMALL FIXED INDUCTOR (2.2UH)	
L74			L40-2285-48	SMALL FIXED INDUCTOR (220NH)	
L75			L34-4209-05	COIL	
L76			L40-3395-48	SMALL FIXED INDUCTOR (3.3UH)	
L77			L34-0943-05	COIL	
L78			L40-4785-48	SMALL FIXED INDUCTOR (470NH)	
L79			L40-3395-48	SMALL FIXED INDUCTOR (3.3UH)	
L81			L34-0535-05	COIL	
L82			L34-0536-05	COIL	
L83,84			L40-1015-48	SMALL FIXED INDUCTOR (100UH)	
L86			L40-2285-48	SMALL FIXED INDUCTOR (220NH)	
L87			L40-4705-48	SMALL FIXED INDUCTOR (47UH)	
L88			L19-0324-05	TROIDAL COIL	
L89		*	L34-4395-05	COIL	
L90			L39-1255-05	COIL	
L91		*	L34-4395-05	COIL	
L92			L34-4211-05	COIL	
L93			L40-1015-48	SMALL FIXED INDUCTOR (100UH)	
L94		*	L34-4395-05	COIL	
L95			L34-4207-05	COIL	
L98			L34-0943-05	COIL	
L99			L34-0781-05	COIL	
L100			L34-0536-05	COIL	
L101			L40-4705-48	SMALL FIXED INDUCTOR (47UH)	
L102			L40-3395-48	SMALL FIXED INDUCTOR (3.3UH)	
L107			L40-1015-48	SMALL FIXED INDUCTOR (100UH)	
L108			L40-1005-48	SMALL FIXED INDUCTOR (10UH)	
L110,111		*	L40-1805-48	SMALL FIXED INDUCTOR (18UH)	
L112,113		*	L40-1081-42	SMALL FIXED INDUCTOR (0.1UH)	
L301		*	L40-1001-42	SMALL FIXED INDUCTOR (10UH)	
L304-310		*	L40-1001-42	SMALL FIXED INDUCTOR (10UH)	
L314-318		*	L40-1001-42	SMALL FIXED INDUCTOR (10UH)	
L500-505			L40-1005-48	SMALL FIXED INDUCTOR (10UH)	
L506,507		*	L40-6805-48	SMALL FIXED INDUCTOR (68UH)	
L508			L40-1005-48	SMALL FIXED INDUCTOR (10UH)	
L509,510		*	L40-2705-48	SMALL FIXED INDUCTOR (27UH)	

PARTS LIST

RF UNIT (X44-3210-00)

Ref. No.	Address	New parts	Parts No.	Description	Destination
L511		*	L40-1805-48	SMALL FIXED INDUCTOR (18UH)	
L512,513		*	L40-2705-48	SMALL FIXED INDUCTOR (27UH)	
L514			L40-2205-48	SMALL FIXED INDUCTOR (22UH)	
L515		*	L40-1805-48	SMALL FIXED INDUCTOR (18UH)	
L516			L40-5695-48	SMALL FIXED INDUCTOR (5.6UH)	
L517			L40-1005-48	SMALL FIXED INDUCTOR (10UH)	
L518			L34-4222-05	COIL	
L519		*	L34-4421-05	COIL	
L520			L34-4222-05	COIL	
L521,522			L40-2285-48	SMALL FIXED INDUCTOR (220NH)	
L523			L40-1005-48	SMALL FIXED INDUCTOR (10UH)	
L524			L40-1095-48	SMALL FIXED INDUCTOR (1UH)	
L525,526			L40-2205-48	SMALL FIXED INDUCTOR (22UH)	
L528		*	L34-4396-05	COIL	
L529,530			L34-4222-05	COIL	
L531-534			L40-1015-48	SMALL FIXED INDUCTOR (100UH)	
L535			L33-0664-05	CHOKE COIL	
L536			L34-2354-05	COIL	
L537			L40-4795-48	SMALL FIXED INDUCTOR (4.7UH)	
L538			L33-0664-05	CHOKE COIL	
L539			L34-2354-05	COIL	
L540			L40-4795-48	SMALL FIXED INDUCTOR (4.7UH)	
L541			L33-0664-05	CHOKE COIL	
L542			L34-2354-05	COIL	
L543			L40-4795-48	SMALL FIXED INDUCTOR (4.7UH)	
L544			L33-0664-05	CHOKE COIL	
L545			L34-2354-05	COIL	
L546			L40-4795-48	SMALL FIXED INDUCTOR (4.7UH)	
L547			L40-3385-48	SMALL FIXED INDUCTOR (330NH)	
L548			L40-1295-48	SMALL FIXED INDUCTOR (1.2UH)	
L549			L40-3385-48	SMALL FIXED INDUCTOR (330NH)	
L550			L40-2285-48	SMALL FIXED INDUCTOR (220NH)	
L551			L40-1015-48	SMALL FIXED INDUCTOR (100NH)	
L552		*	L40-2795-48	SMALL FIXED INDUCTOR (2.7UH)	
L553			L40-1595-48	SMALL FIXED INDUCTOR (1.5UH)	
L554			L40-2295-48	SMALL FIXED INDUCTOR (2.2UH)	
L555			L40-3395-48	SMALL FIXED INDUCTOR (3.3UH)	
L556			L40-2285-48	SMALL FIXED INDUCTOR (220NH)	
L557-559			L40-1015-48	SMALL FIXED INDUCTOR (100UH)	
L580,581			L40-1005-48	SMALL FIXED INDUCTOR (10UH)	
L601			L40-3395-48	SMALL FIXED INDUCTOR (3.3UH)	
L603			L40-2785-48	SMALL FIXED INDUCTOR (270NH)	
L604			L40-1015-48	SMALL FIXED INDUCTOR (100UH)	
X800			L77-1521-15	CRYSTAL RESONATOR (20MHZ)	
XF1			L71-0401-05	CRYSTAL FILTER (73.05MHZ)	
XF2			L71-0235-05	CRYSTAL FILTER	
XF3			L71-0266-05	CRYSTAL FILTER (8830KHZ)	
Q	2F		N38-2640-46	PAN HEAD MACHINE SCREW	
CP500-505			R90-0721-05	MULTI-COMP 4.7K X 16	
R1			RD14BB2E470J	RD 47 J 1/4W	
R2			RD14BB2E151J	RD 150 J 1/4W	
R3			RK73FB2A101J	CHIP R 100 J 1/10W	
R5			RD14BB2E101J	RD 100 J 1/4W	
R7			RD14BB2E820J	RD 82 J 1/4W	
R9			RK73FB2A221J	CHIP R 220 J 1/10W	
R10			RK73FB2A181J	CHIP R 180 J 1/10W	
R11,12			RK73FB2A331J	CHIP R 330 J 1/10W	
R13			RK73FB2A470J	CHIP R 47 J 1/10W	

Ref. No.	Address	New parts	Parts No.	Description	Destination
R14			RK73FB2A222J	CHIP R 2.2K J 1/10W	
R18			RK73FB2A103J	CHIP R 10K J 1/10W	
R19			RK73FB2A330J	CHIP R 33 J 1/10W	
R20			RK73FB2A102J	CHIP R 1.0K J 1/10W	
R21,22			RK73FB2A330J	CHIP R 33 J 1/10W	
R23			RK73FB2A101J	CHIP R 100 J 1/10W	
R24			RK73FB2A222J	CHIP R 2.2K J 1/10W	
R25			RK73FB2A561J	CHIP R 560 J 1/10W	
R27			RK73FB2A181J	CHIP R 180 J 1/10W	
R28			RK73FB2A680J	CHIP R 68 J 1/10W	
R31			RK73FB2A103J	CHIP R 10K J 1/10W	
R44-55			RK73FB2A223J	CHIP R 22K J 1/10W	
R56			RK73FB2A121J	CHIP R 120 J 1/10W	
R58			RK73FB2A680J	CHIP R 68 J 1/10W	
R59,60			RK73FB2A560J	CHIP R 56 J 1/10W	
R61			RK73FB2A680J	CHIP R 68 J 1/10W	
R62			RK73FB2A220J	CHIP R 22 J 1/10W	
R63			RK73FB2A121J	CHIP R 120 J 1/10W	
R65			RK73FB2A220J	CHIP R 22 J 1/10W	
R66			RK73FB2A121J	CHIP R 120 J 1/10W	
R68			RK73FB2A220J	CHIP R 22 J 1/10W	
R69			RK73FB2A121J	CHIP R 120 J 1/10W	
R71			RK73FB2A220J	CHIP R 22 J 1/10W	
R72			RK73FB2A121J	CHIP R 120 J 1/10W	
R74			RK73FB2A220J	CHIP R 22 J 1/10W	
R75			RK73FB2A121J	CHIP R 120 J 1/10W	
R77			RK73FB2A220J	CHIP R 22 J 1/10W	
R78			RK73FB2A121J	CHIP R 120 J 1/10W	
R80			RK73FB2A220J	CHIP R 22 J 1/10W	
R81			RK73FB2A121J	CHIP R 120 J 1/10W	
R83			RK73FB2A220J	CHIP R 22 J 1/10W	
R84			RK73FB2A121J	CHIP R 120 J 1/10W	
R86			RK73FB2A220J	CHIP R 22 J 1/10W	
R87			RK73FB2A121J	CHIP R 120 J 1/10W	
R89			RK73FB2A220J	CHIP R 22 J 1/10W	
R90			RK73FB2A121J	CHIP R 120 J 1/10W	
R92			RK73FB2A151J	CHIP R 150 J 1/10W	
R93			RK73FB2A223J	CHIP R 22K J 1/10W	
R94			RK73FB2A104J	CHIP R 100K J 1/10W	
R95			RK73FB2A393J	CHIP R 39K J 1/10W	
R96,97			RK73FB2A330J	CHIP R 33 J 1/10W	
R98			RK73FB2A473J	CHIP R 47K J 1/10W	
R99			RK73FB2A151J	CHIP R 150 J 1/10W	
R100			RK73FB2A331J	CHIP R 330 J 1/10W	
R101			RK73FB2A221J	CHIP R 220 J 1/10W	
R102			RK73FB2A101J	CHIP R 100 J 1/10W	
R103			RK73FB2A473J	CHIP R 47K J 1/10W	
R104,105			RK73FB2A151J	CHIP R 150 J 1/10W	
R106			RK73FB2A152J	CHIP R 1.5K J 1/10W	
R107			RK73FB2A680J	CHIP R 68 J 1/10W	
R108			RK73FB2A220J	CHIP R 22 J 1/10W	
R109			RK73FB2A100J	CHIP R 10 J 1/10W	
R110			RK73FB2A151J	CHIP R 150 J 1/10W	
R111			RK73FB2A471J	CHIP R 470 J 1/10W	
R112			RK73FB2A102J	CHIP R 1.0K J 1/10W	
R113			RK73FB2A471J	CHIP R 470 J 1/10W	
R114			RK73FB2A562J	CHIP R 5.6K J 1/10W	
R115			RK73FB2A220J	CHIP R 22 J 1/10W	
R116			RK73FB2A150J	CHIP R 15 J 1/10W	

PARTS LSIT

RF UNIT (X44-3210-00)

Ref. No.	Address	New parts	Parts No.	Description				Destination
R117			RK73FB2A471J	CHIP R	470	J	1/10W	
R118			RK73FB2A680J	CHIP R	68	J	1/10W	
R119,120			RK73FB2A331J	CHIP R	330	J	1/10W	
R121			RK73FB2A102J	CHIP R	1.0K	J	1/10W	
R122,123			RK73FB2A100J	CHIP R	10	J	1/10W	
R124			RK73FB2A471J	CHIP R	470	J	1/10W	
R125,126			RK73FB2A100J	CHIP R	10	J	1/10W	
R127			RK73FB2A180J	CHIP R	18	J	1/10W	
R128			RK73FB2A331J	CHIP R	330	J	1/10W	
R130			RK73FB2A331J	CHIP R	330	J	1/10W	
R131			RK73FB2A101J	CHIP R	100	J	1/10W	
R132			RK73FB2A223J	CHIP R	22K	J	1/10W	
R133			RK73FB2A333J	CHIP R	33K	J	1/10W	
R134			RK73FB2A122J	CHIP R	1.2K	J	1/10W	
R139			RK73FB2A104J	CHIP R	100K	J	1/10W	
R140			RK73FB2A473J	CHIP R	47K	J	1/10W	
R142			RK73FB2A473J	CHIP R	47K	J	1/10W	
R143			RK73FB2A471J	CHIP R	470	J	1/10W	
R144			RK73FB2A221J	CHIP R	220	J	1/10W	
R145			RK73FB2A330J	CHIP R	33	J	1/10W	
R146			RK73FB2A471J	CHIP R	470	J	1/10W	
R147			RK73FB2A562J	CHIP R	5.6K	J	1/10W	
R148			RK73FB2A223J	CHIP R	22K	J	1/10W	
R150			RK73FB2A181J	CHIP R	180	J	1/10W	
R154			RK73FB2A471J	CHIP R	470	J	1/10W	
R156			RK73FB2A330J	CHIP R	33	J	1/10W	
R157			RK73FB2A182J	CHIP R	1.8K	J	1/10W	
R158			RK73FB2A330J	CHIP R	33	J	1/10W	
R159			RK73FB2A101J	CHIP R	100	J	1/10W	
R160,161			RK73FB2A222J	CHIP R	2.2K	J	1/10W	
R162			RK73FB2A101J	CHIP R	100	J	1/10W	
R163			RK73FB2A332J	CHIP R	3.3K	J	1/10W	
R164			RK73FB2A152J	CHIP R	1.5K	J	1/10W	
R165			RK73FB2A473J	CHIP R	47K	J	1/10W	
R166			RK73FB2A222J	CHIP R	2.2K	J	1/10W	
R167			RK73FB2A101J	CHIP R	100	J	1/10W	
R168			RK73FB2A393J	CHIP R	39K	J	1/10W	
R169			RK73FB2A102J	CHIP R	1.0K	J	1/10W	
R170			RK73FB2A223J	CHIP R	22K	J	1/10W	
R171,172			RK73FB2A101J	CHIP R	100	J	1/10W	
R173			RK73FB2A393J	CHIP R	39K	J	1/10W	
R174			RK73FB2A223J	CHIP R	22K	J	1/10W	
R175			RK73FB2A102J	CHIP R	1.0K	J	1/10W	
R176			RK73FB2A103J	CHIP R	10K	J	1/10W	
R177			RK73FB2A153J	CHIP R	15K	J	1/10W	
R178			RK73FB2A563J	CHIP R	56K	J	1/10W	
R179			RK73FB2A103J	CHIP R	10K	J	1/10W	
R180			RK73FB2A104J	CHIP R	100K	J	1/10W	
R181			RK73FB2A222J	CHIP R	2.2K	J	1/10W	
R182			RK73FB2A103J	CHIP R	10K	J	1/10W	
R183			RK73FB2A470J	CHIP R	47	J	1/10W	
R184			RK73FB2A121J	CHIP R	120	J	1/10W	
R185			RK73FB2A103J	CHIP R	10K	J	1/10W	
R186			RK73FB2A562J	CHIP R	5.6K	J	1/10W	
R188			RK73FB2A470J	CHIP R	47	J	1/10W	
R189			RK73FB2A152J	CHIP R	1.5K	J	1/10W	
R190			RK73FB2A103J	CHIP R	10K	J	1/10W	
R191			RK73FB2A151J	CHIP R	150	J	1/10W	
R192			RK73FB2A102J	CHIP R	1.0K	J	1/10W	

Ref. No.	Address	New parts	Parts No.	Description				Destination
R195,196			RK73FB2A330J	CHIP R	33	J	1/10W	
R197			RK73FB2A273J	CHIP R	27K	J	1/10W	
R198			RK73FB2A103J	CHIP R	10K	J	1/10W	
R199,200			RK73FB2A221J	CHIP R	220	J	1/10W	
R201			RK73FB2A473J	CHIP R	47K	J	1/10W	
R202,203			RK73FB2A680J	CHIP R	68	J	1/10W	
R204			RK73FB2A101J	CHIP R	100	J	1/10W	
R205,206			RK73FB2A471J	CHIP R	470	J	1/10W	
R207,208			RK73FB2A330J	CHIP R	33	J	1/10W	
R209			RK73FB2A471J	CHIP R	470	J	1/10W	
R210			RK73FB2A102J	CHIP R	1.0K	J	1/10W	
R211			RK73FB2A472J	CHIP R	4.7K	J	1/10W	
R212,213			RK73FB2A330J	CHIP R	33	J	1/10W	
R214			RK73FB2A103J	CHIP R	10K	J	1/10W	
R215			RK73FB2A823J	CHIP R	82K	J	1/10W	
R216			RK73FB2A681J	CHIP R	680	J	1/10W	
R217			RK73FB2A151J	CHIP R	150	J	1/10W	
R218			RK73FB2A332J	CHIP R	3.3K	J	1/10W	
R219			RK73FB2A103J	CHIP R	10K	J	1/10W	
R220			RK73FB2A101J	CHIP R	100	J	1/10W	
R221			RK73FB2A102J	CHIP R	1.0K	J	1/10W	
R222			RK73FB2A103J	CHIP R	10K	J	1/10W	
R223			RK73FB2A392J	CHIP R	3.9K	J	1/10W	
R224			RK73FB2A332J	CHIP R	3.3K	J	1/10W	
R225			RK73FB2A223J	CHIP R	22K	J	1/10W	
R226			RK73FB2A562J	CHIP R	5.6K	J	1/10W	
R229			RK73FB2A103J	CHIP R	10K	J	1/10W	
R230			RK73FB2A152J	CHIP R	1.5K	J	1/10W	
R231,232			RK73FB2A221J	CHIP R	220	J	1/10W	
R233			RK73FB2A152J	CHIP R	1.5K	J	1/10W	
R234			RK73FB2A101J	CHIP R	100	J	1/10W	
R235			RK73FB2A152J	CHIP R	1.5K	J	1/10W	
R236,237			RK73FB2A101J	CHIP R	100	J	1/10W	
R238			RK73FB2A152J	CHIP R	1.5K	J	1/10W	
R239			RK73FB2A101J	CHIP R	100	J	1/10W	
R240			RK73FB2A152J	CHIP R	1.5K	J	1/10W	
R241,242			RK73FB2A331J	CHIP R	330	J	1/10W	
R243			RK73FB2A152J	CHIP R	1.5K	J	1/10W	
R244			RK73FB2A101J	CHIP R	100	J	1/10W	
R245			RK73FB2A152J	CHIP R	1.5K	J	1/10W	
R246			RK73FB2A221J	CHIP R	220	J	1/10W	
R248			RK73FB2A822J	CHIP R	8.2K	J	1/10W	
R249			RK73FB2A222J	CHIP R	2.2K	J	1/10W	
R250			RK73FB2A103J	CHIP R	10K	J	1/10W	
R251			RK73FB2A153J	CHIP R	15K	J	1/10W	
R252			RK73FB2A102J	CHIP R	1.0K	J	1/10W	
R253			RK73FB2A472J	CHIP R	4.7K	J	1/10W	
R256			RK73FB2A472J	CHIP R	4.7K	J	1/10W	
R257			RK73FB2A101J	CHIP R	100	J	1/10W	
R258			RK73FB2A331J	CHIP R	330	J	1/10W	
R259			RK73FB2A104J	CHIP R	100K	J	1/10W	
R260			RK73FB2A102J	CHIP R	1.0K	J	1/10W	
R261			RK73FB2A331J	CHIP R	330	J	1/10W	
R262			RK73FB2A102J	CHIP R	1.0K	J	1/10W	
R263			RK73FB2A332J	CHIP R	3.3K	J	1/10W	
R264			RK73FB2A222J	CHIP R	2.2K	J	1/10W	
R265			RK73FB2A272J	CHIP R	2.7K	J	1/10W	
R266			RK73FB2A332J	CHIP R	3.3K	J	1/10W	
R267			RK73FB2A822J	CHIP R	8.2K	J	1/10W	

PARTS LIST

RF UNIT (X44-3210-00)

Ref. No.	Address	New parts	Parts No.	Description			Destination
R268			RK73FB2A273J	CHIP R	27K	J 1/10W	
R269			RK73FB2A103J	CHIP R	10K	J 1/10W	
R271			RK73FB2A224J	CHIP R	220K	J 1/10W	
R272			RK73FB2A104J	CHIP R	100K	J 1/10W	
R276			RK73FB2A474J	CHIP R	470K	J 1/10W	
R277			RK73FB2A103J	CHIP R	10K	J 1/10W	
R278			RK73FB2A224J	CHIP R	220K	J 1/10W	
R279			RK73FB2A473J	CHIP R	47K	J 1/10W	
R280			RK73FB2A223J	CHIP R	22K	J 1/10W	
R281			RK73FB2A222J	CHIP R	2.2K	J 1/10W	
R284			RK73FB2A224J	CHIP R	220K	J 1/10W	
R285			RK73FB2A103J	CHIP R	10K	J 1/10W	
R286			RK73FB2A101J	CHIP R	100	J 1/10W	
R287			RK73FB2A103J	CHIP R	10K	J 1/10W	
R288			RK73FB2A472J	CHIP R	4.7K	J 1/10W	
R289			RK73FB2A103J	CHIP R	10K	J 1/10W	
R290,291			RK73FB2A472J	CHIP R	4.7K	J 1/10W	
R292,293			RK73FB2A681J	CHIP R	680	J 1/10W	
R294-297			RK73FB2A224J	CHIP R	220K	J 1/10W	
R298			RK73FB2A472J	CHIP R	4.7K	J 1/10W	
R320			RK73FB2A472J	CHIP R	4.7K	J 1/10W	
R322,323			RK73FB2A223J	CHIP R	22K	J 1/10W	
R324			RK73FB2A101J	CHIP R	100	J 1/10W	
R325			RK73FB2A102J	CHIP R	1.0K	J 1/10W	
R329			RK73FB2A224J	CHIP R	220K	J 1/10W	
R330			RK73FB2A104J	CHIP R	100K	J 1/10W	
R331			RK73FB2A684J	CHIP R	680K	J 1/10W	
R332			RK73FB2A103J	CHIP R	10K	J 1/10W	
R333			RK73FB2A680J	CHIP R	68	J 1/10W	
R334			RK73FB2A391J	CHIP R	390	J 1/10W	
R335			RK73FB2A272J	CHIP R	2.7K	J 1/10W	
R336,337			RK73FB2A104J	CHIP R	100K	J 1/10W	
R338			RK73FB2A154J	CHIP R	150K	J 1/10W	
R339			RK73FB2A224J	CHIP R	220K	J 1/10W	
R340			RK73FB2A101J	CHIP R	100	J 1/10W	
R351-362			RK73FB2A103J	CHIP R	10K	J 1/10W	
R363			R92-0670-05	CHIP R	0 OHM		
R380			RK73FB2A682J	CHIP R	6.8K	J 1/10W	
R381			RK73FB2A183J	CHIP R	18K	J 1/10W	
R382			RK73FB2A181J	CHIP R	180	J 1/10W	
R383-385			R92-0670-05	CHIP R	0 OHM		
R386			RK73FB2A330J	CHIP R	33	J 1/10W	
R500			RK73FB2A103J	CHIP R	10K	J 1/10W	
R501			RK73FB2A470J	CHIP R	47	J 1/10W	
R502			RK73FB2A331J	CHIP R	330	J 1/10W	
R503			RK73FB2A472J	CHIP R	4.7K	J 1/10W	
R504			RK73FB2A681J	CHIP R	680	J 1/10W	
R505			RK73FB2A561J	CHIP R	560	J 1/10W	
R506			RK73FB2A333J	CHIP R	33K	J 1/10W	
R507			RK73FB2A101J	CHIP R	100	J 1/10W	
R508			RK73FB2A272J	CHIP R	2.7K	J 1/10W	
R509			RK73FB2A681J	CHIP R	680	J 1/10W	
R510			RK73FB2A470J	CHIP R	47	J 1/10W	
R511			RK73FB2A122J	CHIP R	1.2K	J 1/10W	
R512			RK73FB2A472J	CHIP R	4.7K	J 1/10W	
R513			RK73FB2A103J	CHIP R	10K	J 1/10W	
R514			RK73FB2A220J	CHIP R	22	J 1/10W	
R515			RK73FB2A331J	CHIP R	330	J 1/10W	
R516			RK73FB2A560J	CHIP R	56	J 1/10W	

Ref. No.	Address	New parts	Parts No.	Description			Destination
R517-519			RK73FB2A470J	CHIP R	47	J 1/10W	
R520			RK73FB2A101J	CHIP R	100	J 1/10W	
R521			RK73FB2A223J	CHIP R	22K	J 1/10W	
R522			RK73FB2A331J	CHIP R	330	J 1/10W	
R523			RK73FB2A470J	CHIP R	47	J 1/10W	
R524,525			RK73FB2A102J	CHIP R	1.0K	J 1/10W	
R526			RK73FB2A331J	CHIP R	330	J 1/10W	
R527			RK73FB2A680J	CHIP R	68	J 1/10W	
R528			RK73FB2A391J	CHIP R	390	J 1/10W	
R529			RK73FB2A680J	CHIP R	68	J 1/10W	
R530			RK73FB2A103J	CHIP R	10K	J 1/10W	
R531			RK73FB2A222J	CHIP R	2.2K	J 1/10W	
R532			RK73FB2A151J	CHIP R	150	J 1/10W	
R533			RK73FB2A680J	CHIP R	68	J 1/10W	
R534			RK73FB2A101J	CHIP R	100	J 1/10W	
R535			RK73FB2A471J	CHIP R	470	J 1/10W	
R536			RK73FB2A470J	CHIP R	47	J 1/10W	
R537			RK73FB2A220J	CHIP R	22	J 1/10W	
R545			RK73FB2A103J	CHIP R	10K	J 1/10W	
R546			RK73FB2A821J	CHIP R	820	J 1/10W	
R547			RK73FB2A331J	CHIP R	330	J 1/10W	
R548,549			RK73FB2A470J	CHIP R	47	J 1/10W	
R550			RK73FB2A181J	CHIP R	180	J 1/10W	
R551			RK73FB2A221J	CHIP R	220	J 1/10W	
R552			RK73FB2A101J	CHIP R	100	J 1/10W	
R553			RK73FB2A333J	CHIP R	33K	J 1/10W	
R554			RK73FB2A682J	CHIP R	6.8K	J 1/10W	
R555,556			RK73FB2A101J	CHIP R	100	J 1/10W	
R557			RK73FB2A221J	CHIP R	220	J 1/10W	
R558			RK73FB2A101J	CHIP R	100	J 1/10W	
R559,560			RK73FB2A473J	CHIP R	47K	J 1/10W	
R561,562			RK73FB2A101J	CHIP R	100	J 1/10W	
R563			RK73FB2A102J	CHIP R	1.0K	J 1/10W	
R564			RK73FB2A681J	CHIP R	680	J 1/10W	
R565			RK73FB2A101J	CHIP R	100	J 1/10W	
R566			RK73FB2A471J	CHIP R	470	J 1/10W	
R567			RK73FB2A221J	CHIP R	220	J 1/10W	
R570,571			RK73FB2A222J	CHIP R	2.2K	J 1/10W	
R572			RK73FB2A272J	CHIP R	2.7K	J 1/10W	
R580-583			RK73FB2A223J	CHIP R	22K	J 1/10W	
R584			RK73FB2A101J	CHIP R	100	J 1/10W	
R586			RK73FB2A682J	CHIP R	6.8K	J 1/10W	
R587			RK73FB2A473J	CHIP R	47K	J 1/10W	
R588,589			RK73FB2A101J	CHIP R	100	J 1/10W	
R591			RK73FB2A682J	CHIP R	6.8K	J 1/10W	
R592			RK73FB2A473J	CHIP R	47K	J 1/10W	
R593,594			RK73FB2A101J	CHIP R	100	J 1/10W	
R596			RK73FB2A682J	CHIP R	6.8K	J 1/10W	
R597			RK73FB2A473J	CHIP R	47K	J 1/10W	
R598,599			RK73FB2A101J	CHIP R	100	J 1/10W	
R601			RK73FB2A682J	CHIP R	6.8K	J 1/10W	
R602			RK73FB2A473J	CHIP R	47K	J 1/10W	
R603			RK73FB2A101J	CHIP R	100	J 1/10W	
R604			RK73FB2A470J	CHIP R	47	J 1/10W	
R605			RK73FB2A392J	CHIP R	3.9K	J 1/10W	
R606			RK73FB2A103J	CHIP R	10K	J 1/10W	
R608			RK73FB2A471J	CHIP R	470	J 1/10W	
R609,610			RK73FB2A103J	CHIP R	10K	J 1/10W	
R611			RK73FB2A102J	CHIP R	1.0K	J 1/10W	

PARTS LSIT

RF UNIT (X44-3210-00)

Ref. No.	Address	New parts	Parts No.	Description	Destination
R612			RK73FB2A821J	CHIP R 820 J 1/10W	
R613			RK73FB2A271J	CHIP R 270 J 1/10W	
R614			RK73FB2A101J	CHIP R 100 J 1/10W	
R615			RK73FB2A220J	CHIP R 22 J 1/10W	
R616			RK73FB2A470J	CHIP R 47 J 1/10W	
R617			RK73FB2A392J	CHIP R 3.9K J 1/10W	
R618			RK73FB2A103J	CHIP R 10K J 1/10W	
R619			RK73FB2A220J	CHIP R 22 J 1/10W	
R620			RK73FB2A471J	CHIP R 470 J 1/10W	
R621			RK73FB2A183J	CHIP R 18K J 1/10W	
R622			RK73FB2A122J	CHIP R 1.2K J 1/10W	
R623			RK73FB2A102J	CHIP R 1.0K J 1/10W	
R624			RK73FB2A334J	CHIP R 330K J 1/10W	
R625			RK73FB2A182J	CHIP R 1.8K J 1/10W	
R626			RK73FB2A331J	CHIP R 330 J 1/10W	
R627			RK73FB2A102J	CHIP R 1.0K J 1/10W	
R628			RK73FB2A101J	CHIP R 100 J 1/10W	
R629			RK73FB2A821J	CHIP R 820 J 1/10W	
R630			RK73FB2A822J	CHIP R 8.2K J 1/10W	
R631			RK73FB2A103J	CHIP R 10K J 1/10W	
R632			RK73FB2A102J	CHIP R 1.0K J 1/10W	
R633			RK73FB2A181J	CHIP R 180 J 1/10W	
R634			RK73FB2A331J	CHIP R 330 J 1/10W	
R635			RK73FB2A823J	CHIP R 82K J 1/10W	
R636			RK73FB2A333J	CHIP R 33K J 1/10W	
R637			RK73FB2A101J	CHIP R 100 J 1/10W	
R638			RK73FB2A470J	CHIP R 47 J 1/10W	
R639			RK73FB2A682J	CHIP R 6.8K J 1/10W	
R640			RK73FB2A102J	CHIP R 1.0K J 1/10W	
R641			RK73FB2A151J	CHIP R 150 J 1/10W	
R642			RK73FB2A150J	CHIP R 15 J 1/10W	
R643			RK73FB2A471J	CHIP R 470 J 1/10W	
R644			RK73FB2A103J	CHIP R 10K J 1/10W	
R645			RK73FB2A392J	CHIP R 3.9K J 1/10W	
R646			RK73FB2A822J	CHIP R 8.2K J 1/10W	
R647			RK73FB2A102J	CHIP R 1.0K J 1/10W	
R648			RK73FB2A684J	CHIP R 680K J 1/10W	
R649			RK73FB2A182J	CHIP R 1.8K J 1/10W	
R650			RK73FB2A103J	CHIP R 10K J 1/10W	
R651			RK73FB2A472J	CHIP R 4.7K J 1/10W	
R652			RK73FB2A103J	CHIP R 10K J 1/10W	
R653			RK73FB2A104J	CHIP R 100K J 1/10W	
R655-656			RK73FB2A103J	CHIP R 10K J 1/10W	
R657			RK73FB2A471J	CHIP R 470 J 1/10W	
R658			RK73FB2A101J	CHIP R 100 J 1/10W	
R659			RK73FB2A470J	CHIP R 47 J 1/10W	
R690-697			RK73FB2A221J	CHIP R 220 J 1/10W	
R699			RK73FB2A102J	CHIP R 1.0K J 1/10W	
R710-712			RK73FB2A103J	CHIP R 10K J 1/10W	
R800			RK73FB2A223J	CHIP R 22K J 1/10W	
R801			RK73FB2A103J	CHIP R 10K J 1/10W	
R802			RK73FB2A222J	CHIP R 2.2K J 1/10W	
R803			RK73FB2A271J	CHIP R 270 J 1/10W	
R804			RK73FB2A101J	CHIP R 100 J 1/10W	
R901-902			RK73FB2A101J	CHIP R 100 J 1/10W	
R903-906			RK73FB2A101J	CHIP R 100 J 1/10W	
R908-920			RK73FB2A101J	CHIP R 100 J 1/10W	
R925-928			RK73EB2B221J	CHIP R 220 J 1/8W	
VR2			R12-6417-05	TRIMMING POT. 1K	

Ref. No.	Address	New parts	Parts No.	Description	Destination
VR3			R12-6427-05	TRIMMING POT. 47K	
VR901-904		*	R31-0605-05	VARIABLE RESISTOR 100K	
VR905,906		*	R31-0606-05	VARIABLE RESISTOR 10K	
K1-3			S51-1428-05	RELAY	
K4			S51-1420-05	RELAY	
S800			S31-2420-05	SLIDE SWITCH	
D1-3			LFB01	DIODE	
D4-7			RLS245	DIODE	
D8			1SV128	DIODE	
D10			LFB01	DIODE	
D11			1SV128	DIODE	
D12			RLS135	DIODE	
D13			1SV128	DIODE	
D14			RLS135	DIODE	
D15			1SV128	DIODE	
D16			RLS135	DIODE	
D17			1SV128	DIODE	
D18			RLS135	DIODE	
D19			1SV128	DIODE	
D20			RLS135	DIODE	
D21			1SV128	DIODE	
D22			RLS135	DIODE	
D23			1SV128	DIODE	
D24			RLS135	DIODE	
D25			1SV128	DIODE	
D26			RLS135	DIODE	
D27			1SV128	DIODE	
D28			RLS135	DIODE	
D29			1SV128	DIODE	
D30			RLS135	DIODE	
D31			1SV128	DIODE	
D32			RLS135	DIODE	
D33			1SV128	DIODE	
D35			RLS135	DIODE	
D36			1SV128	DIODE	
D37			RLS135	DIODE	
D38,39			1SV128	DIODE	
D40			RLS135	DIODE	
D41			1SV128	DIODE	
D42,43			DAN235K	DIODE	
D46			HSM88ASR	DIODE	
D47			LFB01	DIODE	
D49			1SV172	DIODE	
D50			RD6.2M(B1)	ZENER DIODE	
D51			B30-2004-05	LED	
D52			RD12M(B2)	ZENER DIODE	
D53,54			1SS355	DIODE	
D55			RD3.0M(B2)	ZENER DIODE	
D56			1SS355	DIODE	
D57			B30-2004-05	LED	
D58			LFB01	DIODE	
D59			1SS355	DIODE	
D60,61			DAN202K	DIODE	
D62-69			1SV128	DIODE	
D70			RD6.2M(B1)	ZENER DIODE	
D71			RD4.7M(B2)	ZENER DIODE	
D72			1SS355	DIODE	
D500			1SV166	DIODE	

PARTS LIST

RF UNIT (X44-3210-00)
FINAL UNIT (X45-351X-XX)

Ref. No.	Address	New parts	Parts No.	Description	Destination
D501			RLS73	DIODE	
D502			1SV166	DIODE	
D503			RLS73	DIODE	
D504			1SV166	DIODE	
D505			RLS73	DIODE	
D506			1SV166	DIODE	
D507			RLS73	DIODE	
D508			1SS181	DIODE	
IC1,2			TC9174F	IC (CMOS I/O EXTENSION)	
IC6			NJM2904M	IC (OP AMP X2)	
IC7			M62363FP	IC (8bit D/A CONVERTER)	
IC8			NJM2902M	IC (OP AMP X4)	
IC9			NJM2903M	IC (COMPARATOR X2)	
IC10			NJM78L05UA	IC (VOLTAGE REGULATOR/ +5V)	
IC500-502			F71022	IC (DDS)	
IC503			UPD74HC390G	IC (DUAL DECADE COUNTER)	
IC505,506			SN16913P	IC (DUBLE BALANCED MIXERS)	
IC507			MB86001PF	IC	
IC508			SN76514N	IC (MIXER)	
IC509			MB86001PF	IC	
IC510			TA78L09F	IC (VOLTAGE REGULATOR/ +9V)	
IC511		*	TA78DS09F	IC	
PL1,2		*	B30-2134-05	LAMP	
Q1			DTA124EK	DIGITAL TRANSISTOR	
Q2			DTC124EK	DIGITAL TRANSISTOR	
Q3			FMA1	TRANSISTOR	
Q5			2SC2954	TRANSISTOR	
Q6			2SC2712(Y)	TRANSISTOR	
Q7-12			FMG4	TRANSISTOR	
Q13			3SK131(M)	FET	
Q14,15		*	2SK2218(5)	FET	
Q16			2SC2954	TRANSISTOR	
Q17-20			2SK520(K44)	FET	
Q21			2SD1624(S)	TRANSISTOR	
Q22			2SC2714(Y)	TRANSISTOR	
Q23,24			3SK131(M)	FET	
Q26,27			2SK520(K43)	FET	
Q28-32			2SC2712(Y)	TRANSISTOR	
Q33			3SK131(M)	FET	
Q35,36			3SK184(R)	FET	
Q37-39			3SK131(M)	FET	
Q42			DTC124EK	DIGITAL TRANSISTOR	
Q43,44			2SC2712(Y)	TRANSISTOR	
Q45,46			DTC143TK	DIGITAL TRANSISTOR	
Q47			2SC2712(Y)	TRANSISTOR	
Q48			DTA124EK	DIGITAL TRANSISTOR	
Q49			2SC2712(Y)	TRANSISTOR	
Q50			2SK208(Y)	FET	
Q51			DTC124EK	DIGITAL TRANSISTOR	
Q52			2SC2712(Y)	TRANSISTOR	
Q54			2SC2712(Y)	TRANSISTOR	
Q55			2SB1188(Q,R)	TRANSISTOR	
Q56			DTC124EK	DIGITAL TRANSISTOR	
Q57,58			2SB1188(Q,R)	TRANSISTOR	
Q59,60			DTC143EK	DIGITAL TRANSISTOR	
Q61			FMC3	TRANSISTOR	
Q62			DTA143EK	DIGITAL TRANSISTOR	
Q63			FMC3	TRANSISTOR	
Q64			DTA143EK	DIGITAL TRANSISTOR	

Ref. No.	Address	New parts	Parts No.	Description	Destination
Q65			2SA1162(Y)	TRANSISTOR	
Q66			DTC114EK	DIGITAL TRANSISTOR	
Q70			DTC114EK	DIGITAL TRANSISTOR	
Q71			DTA114EK	DIGITAL TRANSISTOR	
Q500-503			2SC2712(Y)	TRANSISTOR	
Q504,505			2SK508NV(K53)	FET	
Q506-508			2SC2712(Y)	TRANSISTOR	
Q510,511			2SC2712(Y)	TRANSISTOR	
Q512-514			2SC2714(Y)	TRANSISTOR	
Q515			2SC2712(Y)	TRANSISTOR	
Q516-519			DTC114EK	DIGITAL TRANSISTOR	
Q520-523			2SK508NV(K53)	FET	
Q524,525			2SC2714(Y)	TRANSISTOR	
Q526			2SC2996(Y,O)	TRANSISTOR	
Q527-529			2SC3722K(R)	TRANSISTOR	
Q530			2SC2712(Y)	TRANSISTOR	
Q531			2SC2714(Y)	TRANSISTOR	
Q532			2SC2954	TRANSISTOR	
Q533			DTA124EK	DIGITAL TRANSISTOR	
Q534-536			2SC3722K(R)	TRANSISTOR	
Q537			2SD1757K	TRANSISTOR	
Q539			2SC2714(Y)	TRANSISTOR	
Q800			2SC2714(Y)	TRANSISTOR	
TH1			157-101-53019	THERMISTOR 100	
TH2			157-302-53008	THERMISTOR 3K	
TH3			157-101-53019	THERMISTOR 100	
TH4			157-302-53008	THERMISTOR 3K	
S901,902			W02-1687-15	ENCODER (FILTER)	
S903		*	W02-1861-05	ENCODER (RIT/XIT)	
S904			W02-1660-15	ENCODER (M.CH/VFO.CH)	
A501	2F		X58-3390-03	SUB UNIT (VCO2)	

FINAL UNIT (X45-351X-XX) 0-00 : K,P,M,M2,X 2-71 : E,E2,E3,E9

C1			CK73FF1H473Z	CHIP C	0.047UF	Z
C2			CC73FCH1H101J	CHIP C	100PF	J
C3			CC45FCH2H030C	CERAMIC	3.0PF	C
C4			CC73FCH1H560J	CHIP C	56PF	J
C5			CK73FF1H473Z	CHIP C	0.047UF	Z
C6			CE04EW1H010M	ELECTRO	1.0UF	50WV
C7			CK73FB1H103K	CHIP C	0.010UF	K
C8-18			CK73FB1H102K	CHIP C	1000PF	K
C19-33			CK73FB1H103K	CHIP C	0.010UF	K
C101			CM93D2H102J	MICA	1000PF	J
C102			CC45FSL2H331J	CERAMIC	330PF	J
C103			CC45FSL2H271J	CERAMIC	270PF	J
C104,105			CM93D2H102J	MICA	1000PF	J
C106			CC45FSL2H151J	CERAMIC	150PF	J
C107			CM93D2H222J	MICA	2200PF	J
C108		*	CC45FSL2H181J	CERAMIC	180PF	J
C109			CC45FSL2H101J	CERAMIC	100PF	J
C110			CM93D2H102J	MICA	1000PF	J
C111			CM93D2H561J	MICA	560PF	J
C112			CC45FSL2H471J	CERAMIC	470PF	J
C113,114		*	CC45FSL2H181J	CERAMIC	180PF	J
C115			CC45FSL2H391J	CERAMIC	390PF	J
C116			CC45FSL2H471J	CERAMIC	470PF	J

PARTS LSIT

FINAL UNIT (X45-351X-XX)

Ref. No.	Address	New parts	Parts No.	Description			Destination
C117			CC45FSL2H271J	CERAMIC	270PF	J	
C118			CC45FSL2H391J	CERAMIC	390PF	J	
C119			CC45FSL2H471J	CERAMIC	470PF	J	
C120		*	CC45FSL2H181J	CERAMIC	180PF	J	
C121			CC45FSL2H331J	CERAMIC	330PF	J	
C122			CC45FSL2H820J	CERAMIC	82PF	J	
C123			CC45FSL2H331J	CERAMIC	330PF	J	
C124			CC45FSL2H121J	CERAMIC	120PF	J	
C125			CC45FSL2H270J	CERAMIC	27PF	J	
C126			CC45FSL2H151J	CERAMIC	150PF	J	
C127			CC45FSL2H471J	CERAMIC	470PF	J	
C128			CC45FSL2H270J	CERAMIC	27PF	J	
C129			CC45FSL2H220J	CERAMIC	22PF	J	
C130			CC45FSL2H331J	CERAMIC	330PF	J	
C131			CC45FSL2H471J	CERAMIC	470PF	J	
C132			CC45FSL2H680J	CERAMIC	68PF	J	
C133			CC45FSL2H560J	CERAMIC	56PF	J	
C134			CC45FSL2H151J	CERAMIC	150PF	J	
C135			CC45FSL2H471J	CERAMIC	470PF	J	
C136			CC45FSL2H560J	CERAMIC	56PF	J	
C137			CC45FSL2H151J	CERAMIC	150PF	J	
C138			CC45FSL2H331J	CERAMIC	330PF	J	
C139			CC45FSL2H330J	CERAMIC	33PF	J	
C140,141			CC45FSL2H221J	CERAMIC	220PF	J	
C142			CC45FSL2H101J	CERAMIC	100PF	J	
C143 144			CC45FSL2H151J	CERAMIC	150PF	J	
C145			CC45FSL2H120J	CERAMIC	12PF	J	
C146			CC45FSL2H271J	CERAMIC	270PF	J	
C147			CC45FSL2H390J	CERAMIC	39PF	J	
C148,149			CC45FSL2H820J	CERAMIC	82PF	J	
C150			CC45FSL2H100D	CERAMIC	10PF	D	
C151			CC45FSL2H121J	CERAMIC	120PF	J	
C152			CC45FSL2H470J	CERAMIC	47PF	J	
C153			CC45FSL2H330J	CERAMIC	33PF	J	
C154			CC45FSL2H820J	CERAMIC	82PF	J	
C161			CC45FSL2H100D	CERAMIC	10PF	D	
C162		*	CC45FSL2H090D	CERAMIC	9.0PF	D	
C163			CC45FSL2H270J	CERAMIC	27PF	J	
C301,302			CK73FB1H103K	CHIP C	0.010UF	K	
C304			CC73FCH1H101J	CHIP C	100PF	J	
C305			CC73FCH1H181J	CHIP C	180PF	J	
C306			CC73FCH1H390J	CHIP C	39PF	J	
C401			CE04EW1C470M	ELECTRO	47UF	16WV	
C402			CE04EW1C100M	ELECTRO	10UF	16WV	
C405			CE04EW1E470M	ELECTRO	47UF	25WV	
C406 407			CK73FB1E104K	CHIP C	0.10UF	K	
C408			CE04EW1E470M	ELECTRO	47UF	25WV	
C409			CK73FB1E104K	CHIP C	0.10UF	K	
C410			CE04EW1C470M	ELECTRO	47UF	16WV	
C411			CK73FB1H103K	CHIP C	0.010UF	K	
C412,413			CK73FB1H222K	CHIP C	2200PF	K	
C414			CE04EW1C330M	ELECTRO	33UF	16WV	
C415,416			CE04EW1C101M	ELECTRO	100UF	16WV	
C417			CK73FB1H103K	CHIP C	0.010UF	K	
C418-420			CK73FB1H102K	CHIP C	1000PF	K	
C421			CK73FB1H103K	CHIP C	0.010UF	K	
C422			CE04EW1E470M	ELECTRO	47UF	25WV	
C431-433			CK73FB1H103K	CHIP C	0.010UF	K	
C435			CK73FB1E104K	CHIP C	0.10UF	K	

Ref. No.	Address	New parts	Parts No.	Description			Destination
C436			CK73FB1H102K	CHIP C	1000PF	K	
C437			CK73FB1H103K	CHIP C	0.010UF	K	
C438			CE04EW1H010M	ELECTRO	1.0UF	50WV	
C439			CK73FB1H103K	CHIP C	0.010UF	K	
C450			CK73FB1H103K	CHIP C	0.010UF	K	
C452-454			CK73FB1H103K	CHIP C	0.010UF	K	
C455			CK73FB1H102K	CHIP C	1000PF	K	
C456-458			CK73FB1H103K	CHIP C	0.010UF	K	
C461			CC73FSL1H221J	CHIP C	220PF	J	
C465			CK73FB1E104K	CHIP C	0.10UF	K	
C466-471			CK73FF1C105Z	CHIP C	1.0UF	Z	
C472,473			CK73FB1E104K	CHIP C	0.10UF	K	
C479			CE04EW1H010M	ELECTRO	1.0UF	50WV	
C480-485			CK73FB1H103K	CHIP C	0.010UF	K	
C486-488			CK73FB1E104K	CHIP C	0.10UF	K	
C489			CC73FCH1H470J	CHIP C	47PF	J	
C490,491			CK73FB1H103K	CHIP C	0.010UF	K	
C492			CK73FB1E104K	CHIP C	0.10UF	K	
C493			CK73FB1H103K	CHIP C	0.010UF	K	
C494-496			CK73FB1E104K	CHIP C	0.10UF	K	
C497-499			CK73FB1H103K	CHIP C	0.010UF	K	
C502			CK73FB1E473K	CHIP C	0.047UF	K	
C503			CK73FB1H102K	CHIP C	1000PF	K	
C504,505			CK73FB1E473K	CHIP C	0.047UF	K	
C506			CK73FB1E223K	CHIP C	0.022UF	K	
C507			CK73FB1H681K	CHIP C	680PF	K	
C508,509			CK73FB1E473K	CHIP C	0.047UF	K	
C510,511			CK73FB1E223K	CHIP C	0.022UF	K	
C512			CE04EW1C100M	ELECTRO	10UF	16WV	
C513			CC45FSL2H151J	CERAMIC	150PF	J	
C514,515			CK73FB1E223K	CHIP C	0.022UF	K	
C516			CE04EW1E101M	ELECTRO	100UF	25WV	
C517			CM93D2H681J	MICA	680PF	J	
C518,519			C91-1004-05	CHIP C	6800PF	J	
C520			CK73FB1H102K	CHIP C	1000PF	K	
C521			CK73FB1E473K	CHIP C	0.047UF	K	
C522			CE04EW1C100M	ELECTRO	10UF	16WV	
C523			CK73FB1E223K	CHIP C	0.022UF	K	
C524			CE04EW1E470M	ELECTRO	47UF	25WV	
C525			CM73F2H122J	CHIP C	1200PF	J	
C526			CC45FSL2H151J	CERAMIC	150PF	J	
C527			CE04EW1E101M	ELECTRO	100UF	25WV	
C528,529			CK73FB1E104K	CHIP C	0.10UF	K	
C533			CM73F2H561J	CHIP C	560PF	J	
C550			CK73FB1E104K	CHIP C	0.10UF	K	
C551			CK73FB1H103K	CHIP C	0.010UF	K	
C552,553			CK73FB1H102K	CHIP C	1000PF	K	
C554			CK73FB1H223K	CHIP C	0.022UF	K	
C557			CK73FB1H102K	CHIP C	1000PF	K	
C558			CK73FB1H103K	CHIP C	0.010UF	K	
C559			CK73FB1E104K	CHIP C	0.10UF	K	
C560-563		*	C91-1171-05	HV C	0.01UF	1KWV	
C601			CK73FB1H103K	CHIP C	0.010UF	K	
C602			CE04EW1E102M	ELECTRO	1000UF	25WV	
C603			CK73FB1H103K	CHIP C	0.010UF	K	
C605,606			CK73FB1H103K	CHIP C	0.010UF	K	
C608,609			CK73FB1E104K	CHIP C	0.10UF	K	
C610,611			CK73FB1E473K	CHIP C	0.047UF	K	
C612,613			CE04EW1E470M	ELECTRO	47UF	25WV	

PARTS LIST

FINAL UNIT (X45-351X-XX)

Ref. No.	Address	New parts	Parts No.	Description	Destination
C614			CE04EW1E102M	ELECTRO 1000UF 25WV	
C620			CK73FF1E104Z	CHIP C 0.10UF Z	
C621,622			CE04EW1E470M	ELECTRO 47UF 25WV	
C623			CK73FF1E104Z	CHIP C 0.10UF Z	
C701-711			CK73FB1H103K	CHIP C 0.010UF K	
C712			CE04EW1C471M	ELECTRO 470UF 16WV	
C713			CK73FB1E103K	CHIP C 0.010UF K	
C901			CK73FB1H103K	CHIP C 0.010UF K	
C903			CE04EW1H2R2M	ELECTRO 2.2UF 50WV	
TC1			C05-0030-15	TRIMMER CAPACITOR 20PF	
CN1,2			E04-0191-05	RF COAXIAL CABLE SOCKET	
CN3			E40-5469-05	FLAT CABLE CONNECTOR (12P)	
CN4			E40-5068-05	PIN CONNECTOR (11P)	
CN5			E23-0996-05	TERMINAL (TEST)	
CN301			E40-3238-05	PIN CONNECTOR (3P)	
CN302-305			E04-0191-05	RF COAXIAL CABLE SOCKET	
CN306,307			E23-0996-05	TERMINAL (TEST)	
CN401			E23-5745-05	FLAT CABLE CONNECTOR (20P)	
CN402			E40-5469-05	FLAT CABLE CONNECTOR (12P)	
CN403			E40-3242-05	PIN CONNECTOR (7P)	
CN404			E40-3237-05	PIN CONNECTOR (2P)	
CN405			E40-3239-05	PIN CONNECTOR (4P)	
CN406			E40-5470-05	FLAT CABLE CONNECTOR (13P)	
CN407			E40-3240-05	PIN CONNECTOR (5P)	
CN410			E04-0154-05	RF COAXIAL CABLE SOCKET	
CN411			E40-3239-05	PIN CONNECTOR (4P)	
CN412			E04-0154-05	RF COAXIAL CABLE SOCKET	
CN413			E40-3238-05	PIN CONNECTOR (3P)	
CN501,502			E04-0191-05	RF COAXIAL CABLE SOCKET	
CN503			E40-3240-05	PIN CONNECTOR (5P)	
CN504			E40-3238-05	PIN CONNECTOR (3P)	
CN505-507			E23-0996-05	TERMINAL (TEST)	
CN601			E40-3238-05	PIN CONNECTOR (3P)	
CN602			E40-3239-05	PIN CONNECTOR (4P)	
CN603			E40-5470-05	FLAT CABLE CONNECTOR (13P)	
CN604			E40-3240-05	PIN CONNECTOR (5P)	
CN605			E40-3237-05	PIN CONNECTOR (2P)	
W1	1J,2K	*	E37-0539-05	LEAD WIRE WITH CONNECTOR	
W501	1J,2J	*	E37-0525-05	LEAD WIRE WITH TERMINALR	
W502	2J		E37-0067-05	LEAD WIRE WITH MINIPIN PLUG	
202	2G		F29-0014-05	INSULATING BUSH	
F401			F06-4029-05	FUSE (4A 250V) : C/5	
F601			F53-0093-05	FUSE (5A 125V) : D/5	
A401,402			J13-0075-05	FUSE CLIP : C/5	
CF451			L72-0319-05	CERAMIC FILTER (455KHZ)	
CF452			L72-0333-05	CERAMIC FILTER (455KHZ)	
CF453			L72-0366-05	CERAMIC FILTER (455KHZ)	
L1			L40-2221-33	SMALL FIXED INDUCTOR	
L2			L39-0480-15	TROIDAL COIL	
L3			L40-2221-33	SMALL FIXED INDUCTOR	
L4-10			L40-1015-48	SMALL FIXED INDUCTOR (100UH)	
L101			L39-0491-05	TROIDAL COIL (CORE : L92-0107-05)	
L102			L39-0492-05	TROIDAL COIL (CORE : L92-0107-05)	
L103			L39-0493-05	TROIDAL COIL (CORE : L92-0107-05)	
L104			L39-1223-05	TROIDAL COIL (CORE : L92-0107-05)	
L105			L39-1224-05	TROIDAL COIL (CORE : L92-0107-05)	
L106			L39-1225-05	TROIDAL COIL (CORE : L92-0107-05)	
L107			L39-1222-05	TROIDAL COIL (CORE : L92-0107-05)	

Ref. No.	Address	New parts	Parts No.	Description	Destination
L108			L39-1223-05	TROIDAL COIL (CORE : L92-0107-05)	
L109,110			L39-1221-05	TROIDAL COIL (CORE : L92-0108-05)	
L111			L34-1279-05	COIL	
L112			L34-1281-05	COIL	
L113			L34-1279-05	COIL	
L114			L34-1280-05	COIL	
L115			L34-1281-05	COIL	
L116			L34-1282-05	COIL	
L301,302			L40-1015-48	SMALL FIXED INDUCTOR (100UH)	
L303,304			L34-1035-05	COIL	
L401			L40-1015-48	SMALL FIXED INDUCTOR (100UH)	
L450			L40-2215-48	SMALL FIXED INDUCTOR (220UH)	
L451			L34-0943-05	COIL	
L452			L34-4255-05	COIL	
L453		*	L40-4711-15	SMALL FIXED INDUCTOR	
L454			L40-2221-33	SMALL FIXED INDUCTOR	
L455,456			L34-4254-05	COIL	
L457,458			L34-4255-05	COIL	
L460			L40-3395-48	SMALL FIXED INDUCTOR (3.3UH)	
L461-465			L40-1092-12	SMALL FIXED INDUCTOR	
L466			L40-1592-15	SMALL FIXED INDUCTOR	
L501		*	L40-1505-48	SMALL FIXED INDUCTOR (15UH)	
L502			L40-3395-48	SMALL FIXED INDUCTOR (3.3UH)	
L503			L39-0481-05	TROIDAL COIL	
L504			L33-0617-15	CHOKE COIL	
L505,506			L33-0699-05	CHOKE COIL	
L507			L39-1257-05	TROIDAL COIL	
L508,509			L33-0617-15	CHOKE COIL	
L510			L39-0482-05	TROIDAL COIL	
L511			L33-0651-05	CHOKE COIL	
L512			L33-0617-15	CHOKE COIL	
L513			L39-1209-25	TROIDAL COIL	
L514		*	L40-1505-48	SMALL FIXED INDUCTOR (15UH)	
L515,516		*	L92-0150-05	TROIDAL CORE (W501)	
L520			L40-3985-48	SMALL FIXED INDUCTOR (390NH)	
L601			L40-1005-48	SMALL FIXED INDUCTOR (10UH)	
L602			L40-1092-12	SMALL FIXED INDUCTOR	
R	2G,2H		N67-3010-46	PAN HEAD SEMS SCREW	
K	2G,2H		N87-3006-46	BRAZIER HEAD TAPTITE SCREW	
R1			RK73FB2A100J	CHIP R 10 J 1/10W	
R2-5			RK73FB2A330J	CHIP R 33 J 1/10W	
R6-9			RK73FB2A270J	CHIP R 27 J 1/10W	
R10			RK73FB2A181J	CHIP R 180 J 1/10W	
R11-13			RK73FB2A101J	CHIP R 100 J 1/10W	
R14			RK73FB2A473J	CHIP R 47K J 1/10W	
R15			RK73FB2A103J	CHIP R 10K J 1/10W	
R20			RK73FB2A393J	CHIP R 39K J 1/10W	
R21			RK73FB2A223J	CHIP R 22K J 1/10W	
R22			RK73FB2A104J	CHIP R 100K J 1/10W	
R301-304			RK73FB2A104J	CHIP R 100K J 1/10W	
R305			RK73FB2A473J	CHIP R 47K J 1/10W	
R401			RK73FB2A100J	CHIP R 10 J 1/10W	
R402			RK73FB2A272J	CHIP R 2.7K J 1/10W	
R403,404			RK73FB2A273J	CHIP R 27K J 1/10W	
R405			RK73FB2A473J	CHIP R 47K J 1/10W	
R406			RK73FB2A150J	CHIP R 15 J 1/10W	
R407			RK73FB2A221J	CHIP R 220 J 1/10W	
R408			RK73FB2A101J	CHIP R 100 J 1/10W	

PARTS LSIT

FINAL UNIT (X45-351X-XX)

Ref. No.	Address	New parts	Parts No.	Description	Destination
R409,410			R92-1332-05	CHIP R 160 J 1W	
R411			RK73FB2A182J	CHIP R 1.8K J 1/10W	
R415			RK73FB2A101J	CHIP R 100 J 1/10W	
R416			RK73FB2A220J	CHIP R 22 J 1/10W	
R417			RK73FB2A101J	CHIP R 100 J 1/10W	
R418			RK73FB2A102J	CHIP R 1.0K J 1/10W	
R419			RK73FB2A104J	CHIP R 100K J 1/10W	
R420			RK73FB2A102J	CHIP R 1.0K J 1/10W	
R421			RK73FB2A393J	CHIP R 39K J 1/10W	
R422			RK73FB2A220J	CHIP R 22 J 1/10W	
R423,424			RK73FB2A331J	CHIP R 330 J 1/10W	
R425			RK73FB2A220J	CHIP R 22 J 1/10W	
R426			RK73FB2A103J	CHIP R 10K J 1/10W	
R427			RK73FB2A102J	CHIP R 1.0K J 1/10W	
R428			RK73FB2A222J	CHIP R 2.2K J 1/10W	
R429			RK73FB2A102J	CHIP R 1.0K J 1/10W	
R439			RK73FB2A470J	CHIP R 47 J 1/10W	
R440			RK73FB2A152J	CHIP R 1.5K J 1/10W	
R441,442			RK73FB2A332J	CHIP R 3.3K J 1/10W	
R443,444			RK73FB2A101J	CHIP R 100 J 1/10W	
R445,446			RK73FB2A472J	CHIP R 4.7K J 1/10W	
R447,448			RK73FB2A101J	CHIP R 100 J 1/10W	
R449,450			RK73FB2A222J	CHIP R 2.2K J 1/10W	
R451,452			RK73FB2A101J	CHIP R 100 J 1/10W	
R453			RK73FB2A152J	CHIP R 1.5K J 1/10W	
R454,455			RK73FB2A332J	CHIP R 3.3K J 1/10W	
R456			RK73FB2A333J	CHIP R 33K J 1/10W	
R457,458			RK73FB2A104J	CHIP R 100K J 1/10W	
R459			RK73FB2A471J	CHIP R 470 J 1/10W	
R460			RK73FB2A220J	CHIP R 22 J 1/10W	
R461			RK73FB2A102J	CHIP R 1.0K J 1/10W	
R462			RK73FB2A101J	CHIP R 100 J 1/10W	
R463,464			RK73FB2A151J	CHIP R 150 J 1/10W	
R465,466			RK73FB2A471J	CHIP R 470 J 1/10W	
R467-470			RK73FB2A330J	CHIP R 33 J 1/10W	
R471			RK73FB2A102J	CHIP R 1.0K J 1/10W	
R472			RK73FB2A104J	CHIP R 100K J 1/10W	
R473			RK73FB2A473J	CHIP R 47K J 1/10W	
R474			RK73FB2A104J	CHIP R 100K J 1/10W	
R475			RK73FB2A473J	CHIP R 47K J 1/10W	
R476			RK73FB2A472J	CHIP R 4.7K J 1/10W	
R480			RK73FB2A470J	CHIP R 47 J 1/10W	
R481			RK73FB2A471J	CHIP R 470 J 1/10W	
R482			RK73FB2A330J	CHIP R 33 J 1/10W	
R483			RK73FB2A221J	CHIP R 220 J 1/10W	
R484			RK73FB2A223J	CHIP R 22K J 1/10W	
R485			RK73FB2A822J	CHIP R 8.2K J 1/10W	
R486			RK73FB2A560J	CHIP R 56 J 1/10W	
R487-489			RK73FB2A223J	CHIP R 22K J 1/10W	
R490			RK73FB2A681J	CHIP R 680 J 1/10W	
R491,492			RK73FB2A471J	CHIP R 470 J 1/10W	
R501			RK73FB2A101J	CHIP R 100 J 1/10W	
R502			RK73FB2A331J	CHIP R 330 J 1/10W	
R503			RK73FB2A681J	CHIP R 680 J 1/10W	
R504			RK73FB2A331J	CHIP R 330 J 1/10W	
R505,506			RK73FB2A6R8J	CHIP R 6.8 J 1/10W	
R507			RK73FB2A681J	CHIP R 680 J 1/10W	
R508,509			R92-0696-05	CHIP R 33 J 1/4W	
R510			RK73FB2A331J	CHIP R 330 J 1/10W	

Ref. No.	Address	New parts	Parts No.	Description	Destination
R511			RK73FB2A151J	CHIP R 150 J 1/10W	
R512,513			R92-1318-05	CHIP R 100 J 1W	
R514-517			RS14DB3A5R6J	FL-PROOF RS 5.6 J 1W	
R518,519			RS14DB3A150J	FL-PROOF RS 15 J 1W	
R520			RK73FB2A561J	CHIP R 560 J 1/10W	
R521,522			RS14DB3A5R6J	FL-PROOF RS 5.6 J 1W	
R530		*	R92-2543-05	FIXED RESISTOR 6.8 1/2W	
R601			RK73FB2A472J	CHIP R 4.7K J 1/10W	
R701			RK73FB2A103J	CHIP R 10K J 1/10W	
R702			RK73FB2A101J	CHIP R 100 J 1/10W	
R703-705			RK73FB2A562J	CHIP R 5.6K J 1/10W	
R706			RK73FB2A472J	CHIP R 4.7K J 1/10W	
R707			RK73FB2A821J	CHIP R 820 J 1/10W	
R708			RK73FB2A272J	CHIP R 2.7K J 1/10W	
R709			RK73FB2A333J	CHIP R 33K J 1/10W	
R710			R92-1282-05	CHIP R 10 J 1W	
R712			R92-1316-05	CHIP R 39 J 1W	
R713			RK73FB2A471J	CHIP R 470 J 1/10W	
R714			RK73FB2A153J	CHIP R 15K J 1/10W	
VR1			R12-6730-05	TRIMMING POT. 220	
VR501,502			R12-6734-05	TRIMMING POT. 1K	
W301			R92-0150-05	JUMPER REST 0 OHM (ANT1)	
W303			R92-0150-05	JUMPER REST 0 OHM (ANT2)	
K1-14			S51-1420-05	RELAY	
K301			S51-2417-05	RELAY	
K302			S51-1429-05	RELAY	
K601			S51-2423-05	RELAY	
D1,2			1SS101	DIODE	
D3			RLZJ5.1B	ZENER DIODE	
D4-10			LFB01	DIODE	
D11			DAP202K	DIODE	
D301,302			DSA301LA	DIODE	
D303,304			LFB01	DIODE	
D401			1SS226	DIODE	
D402		*	RD9.1M(B2)	ZENER DIODE	
D450			DAN235K	DIODE	
D451-456			1SV128	DIODE	
D457			DAN235K	DIODE	
D501			MA27T-B	DIODE	
D502,503			SV03YS	DIODE	
D504			SG-5L(R)	DIODE	
D601			LFB01	DIODE	
D701			DAN202K	DIODE	
D702			LFB01	DIODE	
IC1			TC9174F	IC (CMOS I/O EXTENSION)	
IC402			UPC7805H	IC (VOLTAGE REGULATOR/ +5V)	
IC601,602			UPC7808H	IC (VOLTAGE REGULATOR/ +8V)	
IC701			NJM2904M	IC (OP AMP X2)	
Q1-4			FMA7	TRANSISTOR	
Q5			DTC114EK	DIGITAL TRANSISTOR	
Q6			FMC2	TRANSISTOR	
Q10-16			DTB143EK	DIGITAL TRANSISTOR	
Q401			2SA1162(Y)	TRANSISTOR	
Q402,403			2SC2712(Y)	TRANSISTOR	
Q404			2SD1624(S)	TRANSISTOR	
Q405			2SD1406(Y)	TRANSISTOR	
Q460,461			3SK131(M)	FET	
Q470,471			3SK131(M)	FET	

PARTS LIST

FINAL UNIT (X45-351X-XX)
AT UNIT (X53-3340-02)

Ref. No.	Address	New parts	Parts No.	Description	Destination
Q472			2SC2712(Y)	TRANSISTOR	
Q475			3SK131(M)	FET	
Q501			2SC1971	TRANSISTOR	
Q502,503			2SC3133	TRANSISTOR	
Q504			2SD1406(Y)	TRANSISTOR	
Q505,506			2SC2879	TRANSISTOR	
Q507			2SD1406(Y)	TRANSISTOR	
Q601			DTC143TK	DIGITAL TRANSISTOR	
Q701			DTC114TK	DIGITAL TRANSISTOR	
Q702,703			DTD114EK	DIGITAL TRANSISTOR	
TH452			157-502-53002	THERMISTOR 5K	
TH701			5TP-41S	THERMISTOR	
AT UNIT (X53-3340-02)					
C1			CC45FSL2H330J	CERAMIC 33PF J	
C2-8			CK73FB1E103K	CHIP C 0.010UF K	
C9,10			CK73FB1H102K	CHIP C 1000PF K	
C11			CK73FB1E103K	CHIP C 0.010UF K	
C12			CE04EW1C470M	ELECTRO 47UF 16WV	
C13-15			CK73FB1E103K	CHIP C 0.010UF K	
C16			CK73EF1E474Z	CHIP C 0.47UF Z	
C17-19			CK73FB1E103K	CHIP C 0.010UF K	
C20			CE04EW1C101M	ELECTRO 100UF 16WV	
C21-23			CK73FB1E103K	CHIP C 0.010UF K	
C24			CK73EF1E474Z	CHIP C 0.47UF Z	
C25			CK73FB1E103K	CHIP C 0.010UF K	
C26			CE04EW1C101M	ELECTRO 100UF 16WV	
C27-37			CK73FB1E103K	CHIP C 0.010UF K	
C38			CK73FB1H103K	CHIP C 0.010UF K	
C101-103			CK73FB1H103K	CHIP C 0.010UF K	
C105-108			CK73FB1H103K	CHIP C 0.010UF K	
TC1			C05-0031-15	TRIMMER CAPACITOR 10PF	
VC1,2	2L		C02-0023-05	VARIABLE CAPACITOR 300PF	
A5	3L		D40-0633-15	GEAR ASSY	
CN1,2			E04-0157-05	RF COAXIAL CABLE SOCKET	
CN3			E40-3239-05	PIN CONNECTOR (4P)	
CN4			E40-3240-05	PIN CONNECTOR (5P)	
CN5			E40-3238-05	PIN CONNECTOR (3P)	
CN6			E40-3237-05	PIN CONNECTOR (2P)	
CN7			E40-5068-05	PIN CONNECTOR (11P)	
CN101			E40-5066-05	PIN CONNECTOR (9P)	
–			F20-1081-04	INSULATING SHEET	
A1	2M		F11-1142-22	SHIELDING CASE	
A2	2M		F10-1401-23	SHIELDING PLATE	
A3	1M		F11-1143-14	SHIELDING COVER	
A4	2M		F11-1144-14	SHIELDING COVER	
A6	1M	*	F10-2192-04	SHIELDING COVER	
–			J61-0307-05	BAND	
L1			L39-0496-05	COIL	
L2			L39-0415-25	COIL	
L3-6			L40-1011-13	SMALL FIXED INDUCTOR	
L7-11			L40-1011-14	SMALL FIXED INDUCTOR	
L12-14			L40-1011-13	SMALL FIXED INDUCTOR	
L101-103			L40-1011-14	SMALL FIXED INDUCTOR	

Ref. No.	Address	New parts	Parts No.	Description	Destination
L105-108			L40-1011-14	SMALL FIXED INDUCTOR	
L109			L34-1276-15	COIL	
L110			L39-0479-05	COIL	
L111			L39-0495-05	COIL	
L112			L39-0494-15	COIL	
T110-112			L92-0117-05	TROIDAL CORE	
K	1M,2M		N87-3006-46	BRAZIER HEAD TAPTITE SCREW	
S	1M,2M		N88-3006-46	FLAT HEAD TAPTITE SCREW	
R1,2			RD14BB2E101J	RD 100 J 1/4W	
R3			RK73FB2A102J	CHIP R 1.0K J 1/10W	
R4			RD14BB2E560J	RD 56 J 1/4W	
R5,6			RK73FB2A181J	CHIP R 180 J 1/10W	
R7-10			RK73FB2A103J	CHIP R 10K J 1/10W	
R11			RK73FB2A563J	CHIP R 56K J 1/10W	
R12			RK73FB2A121J	CHIP R 120 J 1/10W	
R13			RK73FB2A101J	CHIP R 100 J 1/10W	
R14			RK73FB2A563J	CHIP R 56K J 1/10W	
R15			RK73FB2A121J	CHIP R 120 J 1/10W	
R16			RK73FB2A101J	CHIP R 100 J 1/10W	
R17			RK73FB2A330J	CHIP R 33 J 1/10W	
R18			RK73FB2A103J	CHIP R 10K J 1/10W	
R19			RK73FB2A330J	CHIP R 33 J 1/10W	
R20-23			RK73FB2A103J	CHIP R 10K J 1/10W	
R24,25			RD14BB2E100J	RD 10 J 1/4W	
R26-30			RK73FB2A103J	CHIP R 10K J 1/10W	
R31			RK73FB2A472J	CHIP R 4.7K J 1/10W	
R32			RK73FB2A103J	CHIP R 10K J 1/10W	
R33			RD14BB2E101J	RD 100 J 1/4W	
R34			RK73FB2A472J	CHIP R 4.7K J 1/10W	
VR101,102	3L		R01-3435-05	POTENTIOMETER 10K	
W12-17			R92-0679-05	CHIP R 0 OHM	
W18-28			R92-0670-05	CHIP R 0 OHM	
W29-31			R92-0679-05	CHIP R 0 OHM	
W32			R92-0670-05	CHIP R 0 OHM	
W34			R92-0670-05	CHIP R 0 OHM	
W35,36			R92-0679-05	CHIP R 0 OHM	
W37			R92-0670-05	CHIP R 0 OHM	
W40	2B	*	E33-1984-05	PROCESSED WIRE KIT (to FIL:CN4)	
W40	2B	*	E33-1984-05	PROCESSED WIRE KIT (to CONT:CN4)	
W40	2B	*	E33-1984-05	PROCESSED WIRE KIT (to RL:AT1)	
W40	2B	*	E33-1984-05	PROCESSED WIRE KIT (to RL:AT2)	
K1			S51-2407-05	RELAY	
K101-103			S76-0401-05	RELAY	
K105-108			S76-0401-05	RELAY	
M1,2	3L		T42-0453-05	DC MOTOR	
D1,2			1SS101	DIODE	
D3-8			1SS226	DIODE	
D10			1S1555	DIODE	
D101-103			1S1555	DIODE	
D105-108			1S1555	DIODE	
D109,110			RLS73	DIODE	
IC1			SN74S74N	IC (ONE SHOT MULTI)	
IC2,3			TC4066BP	IC (ANALOG/ DIGITAL SW)	
IC4,5			BA6109U2	IC (MOTOR DRIVER)	
IC6			NJM2903S	IC (DUAL COMPALATOR)	
IC7			MC78L05M	IC (VOLTAGE REGULATOR/ +5V)	

PARTS LSIT

AT UNIT (X53-3340-02)
CONTROL UNIT (X53-356X-XX)

Ref. No.	Address	New parts	Parts No.	Description			Destination
Q1,2			2SC2714(Y)	TRANSISTOR			
Q3			DTC114EK	DIGITAL TRANSISTOR			
Q4			2SA1204(Y)	TRANSISTOR			
Q5			DTC114EK	DIGITAL TRANSISTOR			
CONTROL UNIT (X53-356X-XX) 0-11 : K,P 0-21 : M 0-22 : M2 0-71 : X 2-71 : E 2-72 : E2 2-73 : E3 2-74 : E9							
C1,2			CK73GB1H102K	CHIP C	1000PF	K	
C3			C92-0044-05	CHIP-ELE	47UF	10WV	
C4			CK73GB1H102K	CHIP C	1000PF	K	
C5			C92-0032-05	CHIP-ELE	4.7UF	25WV	
C6,7			CK73GF1E104Z	CHIP C	0.10UF	Z	
C8			C92-0037-05	CHIP-ELE	10UF	16WV	
C9			C92-0032-05	CHIP-ELE	4.7UF	25WV	
C10,11			CK73GF1E104Z	CHIP C	0.10UF	Z	
C12			C92-0037-05	CHIP-ELE	10UF	16WV	
C13			C92-0032-05	CHIP-ELE	4.7UF	25WV	
C14,15			CK73GF1E104Z	CHIP C	0.10UF	Z	
C16			C92-0037-05	CHIP-ELE	10UF	16WV	
C17-41			CK73GB1H102K	CHIP C	1000PF	K	
C42			CK73GB1H103K	CHIP C	0.010UF	K	
C43,44			CK73GB1H102K	CHIP C	1000PF	K	
C45			C92-0044-05	CHIP-ELE	47UF	10WV	
C46,47			CK73GB1H103K	CHIP C	0.010UF	K	
C48,49			CC73GCH1H330J	CHIP C	33PF	J	
C50-54			CK73GB1H103K	CHIP C	0.010UF	K	
C55			C92-0044-05	CHIP-ELE	47UF	10WV	
C56,57			CK73GF1E104Z	CHIP C	0.10UF	Z	
C58			CK73GB1H103K	CHIP C	0.010UF	K	
C59			C92-0044-05	CHIP-ELE	47UF	10WV	
C60			CK73GB1H103K	CHIP C	0.010UF	K	
C61			C92-0044-05	CHIP-ELE	47UF	10WV	
C62-77			CC73GCH1H101J	CHIP C	100PF	J	
C78-80			CK73GB1H103K	CHIP C	0.010UF	K	
C81-88			CC73GCH1H101J	CHIP C	100PF	J	
C89-93			CK73GB1H103K	CHIP C	0.010UF	K	
C94-96			C92-0037-05	CHIP-ELE	10UF	16WV	
C97			C92-0044-05	CHIP-ELE	47UF	10WV	
C98-102			CK73GB1H103K	CHIP C	0.010UF	K	
C103,104			CC73GCH1H220J	CHIP C	22PF	J	
C105-107			CK73GB1H103K	CHIP C	0.010UF	K	
C108			C92-0044-05	CHIP-ELE	47UF	10WV	
C109,110			CK73GB1H103K	CHIP C	0.010UF	K	
C111-113			C92-0023-05	CHIP-ELE	1.0UF	50WV	
C114			CK73GB1H103K	CHIP C	0.010UF	K	
C115			C92-0023-05	CHIP-ELE	1.0UF	50WV	
C116,117			CK73GB1H103K	CHIP C	0.010UF	K	
C118-124			CK73GB1H102K	CHIP C	1000PF	K	
C125,126			CK73GB1H103K	CHIP C	0.010UF	K	
C127-141			CC73GCH1H101J	CHIP C	100PF	J	
C142-147			CK73GB1H102K	CHIP C	1000PF	K	
C148-150			CC73GCH1H101J	CHIP C	100PF	J	
C152			CC73GCH1H101J	CHIP C	100PF	J	
C153-175			CK73GB1H102K	CHIP C	1000PF	K	
C177-183			CK73GB1H102K	CHIP C	1000PF	K	
C184-187			CK73GB1H103K	CHIP C	0.010UF	K	
C188-223			CK73GB1H102K	CHIP C	1000PF	K	
C224,225			CC73GSL1H471J	CHIP C	470PF	J	

Ref. No.	Address	New parts	Parts No.	Description				Destination
C226,227			CK73GB1H103K	CHIP C	0.010UF	K		
C228,229			CK73GB1H102K	CHIP C	1000PF	K		
C230			CK73GB1H103K	CHIP C	0.010UF	K		
C231-233			CK73GB1H102K	CHIP C	1000PF	K		
C501-509			CK73GB1H103K	CHIP C	0.010UF	K		
C511-521			CK73GB1H103K	CHIP C	0.010UF	K		
C522			CK73GB1H102K	CHIP C	1000PF	K		
C523			CK73GF1E104Z	CHIP C	0.10UF	Z		
C601-604			CK73GB1H103K	CHIP C	0.010UF	K		
C605			CK73GF1E104Z	CHIP C	0.10UF	Z		
C606			CK73GB1H102K	CHIP C	1000PF	K		
401	1D		E23-0623-04	EARTH LUG				
CN1,2		*	E40-5744-05	FLAT CABLE CONNECTOR (20P)				
CN3			E40-3239-05	PIN CONNECTOR (4P)				
CN4		*	E40-5763-05	PIN CONNECTOR (12P)				
CN5		*	E40-5744-05	FLAT CABLE CONNECTOR (20P)				
CN6			E40-5761-05	FLAT CABLE CONNECTOR (26P)				
CN7		*	E40-5742-05	FLAT CABLE CONNECTOR (13P)				
CN8		*	E40-5739-05	FLAT CABLE CONNECTOR (10P)				
CN9,10		*	E40-5740-05	FLAT CABLE CONNECTOR (20P)				
CN11		*	E40-5744-05	FLAT CABLE CONNECTOR (20P)				
CN12			E02-2015-05	SOCKET FOR IC				
CN501		*	E40-5740-05	FLAT CABLE CONNECTOR (20P)				
CN601			E40-3251-05	PIN CONNECTOR (7P)				
J601			E06-0858-15	CYLINDRICAL RECEPTACLE (8P MIC)				
A1	3G	*	F01-1007-04	HEAT SINK				
402	3G		G02-0574-04	FLAT SPRING				
403	2A	*	J19-1570-05	HOLDER (BATT)				
L1-3			L40-4705-48	SMALL FIXED INDUCTOR (47UH)				
L4,5			L40-1292-18	SMALL FIXED INDUCTOR				
L6,7			L40-4705-48	SMALL FIXED INDUCTOR (47UH)				
L8			L40-1292-18	SMALL FIXED INDUCTOR				
L11-25			L40-4705-48	SMALL FIXED INDUCTOR (47UH)				
L26,27			L40-1005-48	SMALL FIXED INDUCTOR (10UH)				
L28			L40-4705-48	SMALL FIXED INDUCTOR (47UH)				
X1		*	L77-1589-05	CRYSTAL RESONATOR (11.0592MHZ)				
X2			L78-0325-05	RESONATOR (2.0MHZ)				
G	3G		N32-2606-46	FLAT HEAD MACHIN SCREW				
R1,2			RK73GB1J101J	CHIP R	100	J	1/16W	
R3,4			RK73GB1J102J	CHIP R	1.0K	J	1/16W	
R5			RK73GB1J101J	CHIP R	100	J	1/16W	
R6			RK73GB1J473J	CHIP R	47K	J	1/16W	
R7-9			RK73GB1J102J	CHIP R	1.0K	J	1/16W	
R10-28			RK73GB1J101J	CHIP R	100	J	1/16W	
R29			RK73GB1J105J	CHIP R	1.0M	J	1/16W	
R30-37			RK73GB1J101J	CHIP R	100	J	1/16W	
R39			RK73GB1J102J	CHIP R	1.0K	J	1/16W	
R40			RK73GB1J471J	CHIP R	470	J	1/16W	
R41			RK73GB1J103J	CHIP R	10K	J	1/16W	
R42			RK73GB1J222J	CHIP R	2.2K	J	1/16W	
R43,44			RK73GB1J104J	CHIP R	100K	J	1/16W	
R45			RK73GB1J472J	CHIP R	4.7K	J	1/16W	
R46			RK73GB1J102J	CHIP R	1.0K	J	1/16W	
R47			RK73GB1J473J	CHIP R	47K	J	1/16W	
R48			RK73GB1J102J	CHIP R	1.0K	J	1/16W	X

PARTS LIST

CONTROL UNIT (X53-356X-XX)

Ref. No.	Address	New parts	Parts No.	Description	Destination
R49			RK73GB1J473J	CHIP R 47K J 1/16W	
R51			RK73GB1J473J	CHIP R 47K J 1/16W	
R52			RK73GB1J103J	CHIP R 10K J 1/16W	
R53			RK73GB1J102J	CHIP R 1.0K J 1/16W	E3E9M
R54			RK73GB1J473J	CHIP R 47K J 1/16W	
R55,56			RK73GB1J103J	CHIP R 10K J 1/16W	
R57			RK73GB1J102J	CHIP R 1.0K J 1/16W	EE2E3E9
R58			RK73GB1J473J	CHIP R 47K J 1/16W	
R59-68			RK73GB1J103J	CHIP R 10K J 1/16W	
R69			RK73GB1J102J	CHIP R 1.0K J 1/16W	E2MM2
R70			RK73GB1J473J	CHIP R 47K J 1/16W	
R71,72			RK73GB1J103J	CHIP R 10K J 1/16W	
R73			RK73GB1J102J	CHIP R 1.0K J 1/16W	E
R74			RK73GB1J473J	CHIP R 47K J 1/16W	
R75-85			RK73GB1J103J	CHIP R 10K J 1/16W	
R86,87			RK73GB1J472J	CHIP R 4.7K J 1/16W	
R88			RK73GB1J153J	CHIP R 15K J 1/16W	
R89			RK73GB1J334J	CHIP R 330K J 1/16W	
R90-92			RK73GB1J153J	CHIP R 15K J 1/16W	
R93			RK73GB1J103J	CHIP R 10K J 1/16W	
R94,95			RK73GB1J153J	CHIP R 15K J 1/16W	
R96			RK73GB1J105J	CHIP R 1.0M J 1/16W	
R97			RK73GB1J102J	CHIP R 1.0K J 1/16W	
R98			RK73GB1J473J	CHIP R 47K J 1/16W	
R99			RK73GB1J102J	CHIP R 1.0K J 1/16W	
R100-105			RK73GB1J105J	CHIP R 1.0M J 1/16W	
R107			RK73GB1J105J	CHIP R 1.0M J 1/16W	
R108-119			RK73GB1J104J	CHIP R 100K J 1/16W	
R120-130			RK73GB1J101J	CHIP R 100 J 1/16W	
R131			RK73GB1J102J	CHIP R 1.0K J 1/16W	
R132,133			RK73GB1J103J	CHIP R 10K J 1/16W	
R134-137			RK73GB1J101J	CHIP R 100 J 1/16W	
R138-140			RK73GB1J101J	CHIP R 100 J 1/16W	
R141-144			RK73GB1J102J	CHIP R 1.0K J 1/16W	
R145			RK73GB1J223J	CHIP R 22K J 1/16W	
R146,147			RK73GB1J473J	CHIP R 47K J 1/16W	
R148-150			RK73GB1J101J	CHIP R 100 J 1/16W	
R152-169			RK73GB1J101J	CHIP R 100 J 1/16W	
R170			RK73GB1J474J	CHIP R 470K J 1/16W	
R171			RK73GB1J102J	CHIP R 1.0K J 1/16W	
R172-177			RK73GB1J101J	CHIP R 100 J 1/16W	
R179-201			RK73GB1J101J	CHIP R 100 J 1/16W	
R202			RK73GB1J473J	CHIP R 47K J 1/16W	
R203-214			RK73GB1J101J	CHIP R 100 J 1/16W	
R215			RK73GB1J473J	CHIP R 47K J 1/16W	
R216-222			RK73GB1J101J	CHIP R 100 J 1/16W	
R223			RK73GB1J333J	CHIP R 33K J 1/16W	
R224			RK73GB1J101J	CHIP R 100 J 1/16W	
R225			RK73GB1J473J	CHIP R 47K J 1/16W	
R226			RK73GB1J104J	CHIP R 100K J 1/16W	
R227-234			RK73GB1J103J	CHIP R 10K J 1/16W	
R235-237			RK73GB1J102J	CHIP R 1.0K J 1/16W	
R238-240			RK73GB1J101J	CHIP R 100 J 1/16W	
R241			RK73GB1J473J	CHIP R 47K J 1/16W	
R242,243			RK73GB1J102J	CHIP R 1.0K J 1/16W	
R244			RK73GB1J101J	CHIP R 100 J 1/16W	KPMXE
R244			RK73GB1J101J	CHIP R 100 J 1/16W	E2E3E9
R245			RK73GB1J473J	CHIP R 47K J 1/16W	
R501-504			RK73GB1J473J	CHIP R 47K J 1/16W	

Ref. No.	Address	New parts	Parts No.	Description	Destination
R505			RK73GB1J391J	CHIP R 390 J 1/16W	
R506			RK73GB1J271J	CHIP R 270 J 1/16W	
R507			RK73GB1J473J	CHIP R 47K J 1/16W	
R508			RK73GB1J391J	CHIP R 390 J 1/16W	
R509			RK73GB1J271J	CHIP R 270 J 1/16W	
R510			RK73GB1J391J	CHIP R 390 J 1/16W	
R511			RK73GB1J271J	CHIP R 270 J 1/16W	
R512			RK73GB1J391J	CHIP R 390 J 1/16W	
R513			RK73GB1J271J	CHIP R 270 J 1/16W	
R514			RK73GB1J473J	CHIP R 47K J 1/16W	
R515			RK73GB1J391J	CHIP R 390 J 1/16W	
R516			RK73GB1J271J	CHIP R 270 J 1/16W	
R517			RK73GB1J391J	CHIP R 390 J 1/16W	
R518			RK73GB1J271J	CHIP R 270 J 1/16W	
R519			RK73GB1J391J	CHIP R 390 J 1/16W	
R520			RK73GB1J271J	CHIP R 270 J 1/16W	
R521-523			RK73GB1J473J	CHIP R 47K J 1/16W	
R524			RK73GB1J102J	CHIP R 1.0K J 1/16W	
R525			RK73GB1J473J	CHIP R 47K J 1/16W	
R526-527			RK73GB1J101J	CHIP R 100 J 1/16W	
R528			RK73GB1J391J	CHIP R 390 J 1/16W	
R529			RK73GB1J271J	CHIP R 270 J 1/16W	
R530			RK73GB1J391J	CHIP R 390 J 1/16W	
R531			RK73GB1J271J	CHIP R 270 J 1/16W	
R532			RK73GB1J391J	CHIP R 390 J 1/16W	
R533			RK73GB1J271J	CHIP R 270 J 1/16W	
R534			RK73GB1J391J	CHIP R 390 J 1/16W	
R535			RK73GB1J271J	CHIP R 270 J 1/16W	
R536-539			RK73GB1J101J	CHIP R 100 J 1/16W	
R540			RK73GB1J473J	CHIP R 47K J 1/16W	
R541,542			RK73GB1J101J	CHIP R 100 J 1/16W	
R543-546			RK73GB1J473J	CHIP R 47K J 1/16W	
R547,548			RK73GB1J103J	CHIP R 10K J 1/16W	
R549-555			RK73GB1J473J	CHIP R 47K J 1/16W	
R556			RK73GB1J103J	CHIP R 10K J 1/16W	
S1			S62-0412-05	SLIDE SWITCH	
S501-545		*	S70-0439-05	TACT SWITCH	
S546-551		*	S70-0439-05	TACT SWITCH	
D1-3			1SS355	DIODE	
D4		*	RD7.5M(B3)	ZENER DIODE	
D5-12			1SS355	DIODE	
D501			B30-2036-05	LED (RED)	
D502		*	B30-2146-05	LED (ORANGE)	
D510-519		*	B30-2146-05	LED (ORANGE)	
IC1,2			UPC7805H	IC (VOLTAGE REGULATOR/ +5V)	
IC3			TA78L08F	IC (VOLTAGE REGULATOR)	
IC4			AT2402N10SI2.7	IC (2kbit SERIAL EEPROMM)	
IC5			MB3780A	IC (BATTERY BACKUP)	
IC6		*	M37702S4BFP	IC	
IC7			TC7S04F	IC (2CH NAND GATE)	
IC8			LC3564QMF-10	IC	
IC9			TC4052BF	IC (4CH MPX/DE-MPX)	
IC10			TC7S04F	IC (2CH NAND GATE)	
IC11		*	TC74VHC32F	IC	
IC12		*	27C512RJLVC	IC	
IC13			TC4052BF	IC (4CH MPX/DE-MPX)	
IC14		*	TC74VHC08F	IC	
IC15		*	TC74VHC245F	IC	

PARTS LSIT

CONTROL UNIT (X53-356X-XX)
TX-RX UNIT (X57-4620-00)

Ref. No.	Address	New parts	Parts No.	Description	Destination
IC16			CXD1095Q	IC (I/O EXPANDER)	
IC17,18		*	TC74VHC138F	IC	
IC19		*	TC74VHC573F	IC	
IC20,21			LZ92K371	IC (ENCODER PROCESSOR)	
IC22,23			CXD1095Q	IC (I/O EXPANDER)	
IC24		*	68HC05G2419553	IC	
IC25,26			TC4584BF	IC (BUFF)	
IC27		*	ADM232LAR	IC	
IC28			NJM2904M	IC (OP AMP X2)	
IC29			TC7S32F	IC (2CH NAND GATE)	
IC501-504			UPD6345GS	IC	
Q1			DTA143EK	DIGITAL TRANSISTOR	
Q2			DTC143EK	DIGITAL TRANSISTOR	
Q3,4			DTC114EK	DIGITAL TRANSISTOR	
Q5			DTC143EK	DIGITAL TRANSISTOR	
Q6-11			DTC114EK	DIGITAL TRANSISTOR	
Q12,13			DTA143EK	DIGITAL TRANSISTOR	
Q14-22			DTC143EK	DIGITAL TRANSISTOR	
Q23,24			DTA143EK	DIGITAL TRANSISTOR	
Q27,28			DTC114EK	DIGITAL TRANSISTOR	
Q29-31			DTC143TK	DIGITAL TRANSISTOR	
Q33			DTC143EK	DIGITAL TRANSISTOR	
Q501,502			DTC114EK	DIGITAL TRANSISTOR	

TX-RX UNIT (X57-4620-00)

C1			C90-2045-05	ELECTRO	2.2UF	25WV
C2,3			CK73FF1E104Z	CHIP C	0.10UF	Z
C4,5			CC73FCH1H330J	CHIP C	33PF	J
C6			C90-2045-05	ELECTRO	2.2UF	25WV
C7,8			CK73FF1E104Z	CHIP C	0.10UF	Z
C9-14			CC73FCH1H330J	CHIP C	33PF	J
C15			CC73FSL1H152J	CHIP C	1500PF	J
C16			CC73FCH1H101J	CHIP C	100PF	J
C17			CC73FSL1H152J	CHIP C	1500PF	J
C18			CC73FCH1H101J	CHIP C	100PF	J
C19-22			CK73FF1E104Z	CHIP C	0.10UF	Z
C23			C90-2045-05	ELECTRO	2.2UF	25WV
C24			CK73FB1H223K	CHIP C	0.022UF	K
C25			CK73FF1E104Z	CHIP C	0.10UF	Z
C26,27			CK73FB1H223K	CHIP C	0.022UF	K
C28			C90-2045-05	ELECTRO	2.2UF	25WV
C29			CK73FF1E104Z	CHIP C	0.10UF	Z
C30			CK73GB1H102K	CHIP C	1000PF	K
C31			CK73FB1H471K	CHIP C	470PF	K
C32			CK73FF1E104Z	CHIP C	0.10UF	Z
C33			CK73GB1H102K	CHIP C	1000PF	K
C34			C90-2045-05	ELECTRO	2.2UF	25WV
C36			CC73GCH1H330J	CHIP C	33PF	J
C37			CK73GB1H102K	CHIP C	1000PF	K
C38			CK73GB1H103K	CHIP C	0.010UF	K
C39,40			CK73FB1H102K	CHIP C	1000PF	K
C41			C90-2045-05	ELECTRO	2.2UF	25WV
C42			CK73FB1H103K	CHIP C	0.010UF	K
C44			CK73GB1H102K	CHIP C	1000PF	K
C45			CC73FCH1H121J	CHIP C	120PF	J
C46			CK73GB1H102K	CHIP C	1000PF	K
C50			CK73GB1H102K	CHIP C	1000PF	K

Ref. No.	Address	New parts	Parts No.	Description			Destination
C52			CE04EW1C470M	ELECTRO	47UF	16WV	
C53			CK73GB1E223K	CHIP C	0.022UF	K	
C54			CQ92M1H154K	MYLAR	0.15UF	K	
C55			CK73FB1H102K	CHIP C	1000PF	K	
C56			CE04EW1C101M	ELECTRO	100UF	16WV	
C57			CC73ECH1H202J	CHIP C	2000PF	J	
C58			CK73FB1H103K	CHIP C	0.010UF	K	
C59			CC73GCH1H680J	CHIP C	68PF	J	
C60			CC73GCH1H180J	CHIP C	18PF	J	
C61			CC73GCH1H060D	CHIP C	6.0PF	D	
C62			CC73GCH1H470J	CHIP C	47PF	J	
C63			CK73GB1H103K	CHIP C	0.010UF	K	
C64			CE04EW1C101M	ELECTRO	100UF	16WV	
C65,66			CK73GB1H102K	CHIP C	1000PF	K	
C67			CE04EW1C470M	ELECTRO	47UF	16WV	
C68,69			CK73GB1H102K	CHIP C	1000PF	K	
C100			CE04EW1C100M	ELECTRO	10UF	16WV	
C101			CK73FF1E104Z	CHIP C	0.10UF	Z	
C103			CE04EW1H010M	ELECTRO	1.0UF	50WV	
C104			CE04EW1C100M	ELECTRO	10UF	16WV	
C105			CK73GB1H102K	CHIP C	1000PF	K	
C106			CC73FCH1H102J	CHIP C	1000PF	J	
C107			CK73FF1E104Z	CHIP C	0.10UF	Z	
C108			CE04EW1C100M	ELECTRO	10UF	16WV	
C109			CK73FF1E104Z	CHIP C	0.10UF	Z	
C112			CC73FCH1H102J	CHIP C	1000PF	J	
C113,114			CQ92FM1H223K	MYLAR	0.022UF	K	
C116			CC73FCH1H102J	CHIP C	1000PF	J	
C118,119			CC73GCH1H271J	CHIP C	270PF	J	
C120			CE04EW1C100M	ELECTRO	10UF	16WV	
C121			CE04EW1H010M	ELECTRO	1.0UF	50WV	
C122			CC73FSL1H152J	CHIP C	1500PF	J	
C123			CC73GCH1H101J	CHIP C	100PF	J	
C124			CC73GCH1H221J	CHIP C	220PF	J	
C125			CK73GB1E223K	CHIP C	0.022UF	K	
C126			CE04EW1C100M	ELECTRO	10UF	16WV	
C127			CK73GB1H103K	CHIP C	0.010UF	K	
C128			CC73FSL1H221J	CHIP C	220PF	J	
C129			CC73FCH1H101J	CHIP C	100PF	J	
C130			CE04EW1C100M	ELECTRO	10UF	16WV	
C131			CK73FF1E104Z	CHIP C	0.10UF	Z	
C132			CE04EW1C100M	ELECTRO	10UF	16WV	
C133			CC73GCH1H101J	CHIP C	100PF	J	
C134			CK73GB1E223K	CHIP C	0.022UF	K	
C135			CE04EW1C100M	ELECTRO	10UF	16WV	
C136			CK73GB1E223K	CHIP C	0.022UF	K	
C137			CC73FCH1H102J	CHIP C	1000PF	J	
C138			CC73GCH1H221J	CHIP C	220PF	J	
C139			CC73GCH1H271J	CHIP C	270PF	J	
C140,141			CK73GB1E223K	CHIP C	0.022UF	K	
C142			CE04EW1C100M	ELECTRO	10UF	16WV	
C143			CK73GB1E223K	CHIP C	0.022UF	K	
C144		*	CQ92FM1H683K	MYLAR	0.068UF	K	
C145			CK73FB1E104K	CHIP C	0.10UF	K	
C146,147			CC73FCH1H102J	CHIP C	1000PF	J	
C150			CK73GB1E223K	CHIP C	0.022UF	K	
C151			CE04EW1C100M	ELECTRO	10UF	16WV	
C152			CC73FCH1H102J	CHIP C	1000PF	J	
C153			CC73GCH1H271J	CHIP C	270PF	J	

PARTS LIST

TX-RX UNIT (X57-4620-00)

Ref. No.	Address	New parts	Parts No.	Description			Destination
C154			CK73GB1E223K	CHIP C	0.022UF	K	
C155			CE04EW1C100M	ELECTRO	10UF	16WV	
C156			CK73FF1E104Z	CHIP C	0.10UF	Z	
C157			CK73GB1E223K	CHIP C	0.022UF	K	
C158			C90-2045-05	ELECTRO	2.2UF	25WV	
C159,160			CK73FF1E104Z	CHIP C	0.10UF	Z	
C161			CK73GB1E223K	CHIP C	0.022UF	K	
C162			CE04EW1C100M	ELECTRO	10UF	16WV	
C163			CK73FF1E104Z	CHIP C	0.10UF	Z	
C164			CE04EW1C100M	ELECTRO	10UF	16WV	
C165			CK73FF1E104Z	CHIP C	0.10UF	Z	
C166,167			CE04EW1C100M	ELECTRO	10UF	16WV	
C168,169			CK73FF1E104Z	CHIP C	0.10UF	Z	
C170			CK73GB1H103K	CHIP C	0.010UF	K	
C171-176			CE04EW1C100M	ELECTRO	10UF	16WV	
C177			CQ92M1H103K	MYLAR	0.010UF	K	
C178,179			CC73FSL1H152J	CHIP C	1500PF	J	
C180,181			CC73ECH1H202J	CHIP C	2000PF	J	
C182			CC73GCH1H331J	CHIP C	330PF	J	
C183-185			CC73FSL1H152J	CHIP C	1500PF	J	
C186			CE04EW1C100M	ELECTRO	10UF	16WV	
C187			CC73GCH1H331J	CHIP C	330PF	J	
C188			CK73GB1H562K	CHIP C	5600PF	K	
C189			CE04EW1C100M	ELECTRO	10UF	16WV	
C190			CC73GCH1H331J	CHIP C	330PF	J	
C191,192			CE04NW1C100M	ELECTRO	10UF	16WV	
C193			CK73GB1H103K	CHIP C	0.010UF	K	
C194			CE04NW1C100M	ELECTRO	10UF	16WV	
C195			CE04EW1H010M	ELECTRO	1.0UF	50WV	
C196,197			CE04NW1C100M	ELECTRO	10UF	16WV	
C198			CE04EW1C100M	ELECTRO	10UF	16WV	
C199,200			CE04NW1C220M	ELECTRO	22UF	16WV	
C201,202			CK73GF1E104Z	CHIP C	0.10UF	Z	
C203,204			CE04NW1E4R7M	ELECTRO	4.7UF	25WV	
C205			CE04EW1C100M	ELECTRO	10UF	16WV	
C206,207			CK73GF1E104Z	CHIP C	0.10UF	Z	
C208			CK73GB1E223K	CHIP C	0.022UF	K	
C209,210			CE04NW1C100M	ELECTRO	10UF	16WV	
C212,213			CE04NW1H010M	ELECTRO	1.0UF	50WV	
C214			CK73GB1H472K	CHIP C	4700PF	K	
C215,216			CE04EW1C100M	ELECTRO	10UF	16WV	
C218,219			CK73EF1E474Z	CHIP C	0.47UF	Z	
C221,222			CK73FB1H102K	CHIP C	1000PF	K	
C223			CE04EW1C471M	ELECTRO	470UF	16WV	
C224			CE04EW1C100M	ELECTRO	10UF	16WV	
C225			CE04EW1C470M	ELECTRO	47UF	16WV	
C226			CE04EW1C101M	ELECTRO	100UF	16WV	
C227			CE04EW1C100M	ELECTRO	10UF	16WV	
C228			CE04EW1C101M	ELECTRO	100UF	16WV	
C229			CE04EW1C100M	ELECTRO	10UF	16WV	
C230			CE04EW1C471M	ELECTRO	470UF	16WV	
C231,232			CK73EF1E474Z	CHIP C	0.47UF	Z	
C233			CQ92M1H154K	MYLAR	0.15UF	K	
C235,236			CK73FB1H102K	CHIP C	1000PF	K	
C237			CE04EW1E471M	ELECTRO	470UF	25WV	
C240			CC73FSL1H152J	CHIP C	1500PF	J	
C241			CE04EW1H010M	ELECTRO	1.0UF	50WV	
C300,301			CC73FCH1H101J	CHIP C	100PF	J	
C302			CC73GCH1H101J	CHIP C	100PF	J	
C303,304			CC73FCH1H101J	CHIP C	100PF	J	
C305			CC73GCH1H101J	CHIP C	100PF	J	
C306,307			CC73FCH1H101J	CHIP C	100PF	J	
C308			CC73GCH1H101J	CHIP C	100PF	J	
C309,310			CC73FCH1H101J	CHIP C	100PF	J	
C312,313			CC73FCH1H101J	CHIP C	100PF	J	
C314			CC73GCH1H101J	CHIP C	100PF	J	
C315			CC73FCH1H101J	CHIP C	100PF	J	
C316-320			CK73FB1H102K	CHIP C	1000PF	K	
C321			CC73FSL1H471J	CHIP C	470PF	J	
C326,327			CK73GB1H102K	CHIP C	1000PF	K	
C330-333			CK73FB1H102K	CHIP C	1000PF	K	
C334			CK73GB1E223K	CHIP C	0.022UF	K	
C335			CC73GCH1H331J	CHIP C	330PF	J	
C336-340			CK73GB1E223K	CHIP C	0.022UF	K	
C341			CK73FF1E104Z	CHIP C	0.10UF	Z	
C342			CC73FSL1H152J	CHIP C	1500PF	J	
C343			CK73FB1H562K	CHIP C	5600PF	K	
C344			CK73GB1H472K	CHIP C	4700PF	K	
C345			CK73GB1E223K	CHIP C	0.022UF	K	
C346-348			CC73FCH1H101J	CHIP C	100PF	J	
C349,350			CK73FF1E104Z	CHIP C	0.10UF	Z	
C351			CK73GB1E223K	CHIP C	0.022UF	K	
C355			CE04NW1C100M	ELECTRO	10UF	16WV	
C356			CE04EW1HR47M	ELECTRO	0.47UF	50WV	
C357			CE04EW1C100M	ELECTRO	10UF	16WV	
C358-361			CK73FB1H103K	CHIP C	0.010UF	K	
C363			CK73GB1H103K	CHIP C	0.010UF	K	
C364			C90-2045-05	ELECTRO	2.2UF	25WV	
C365-375			CK73FB1H471K	CHIP C	470PF	K	
C376			CK73GB1E223K	CHIP C	0.022UF	K	
C377-379			CK73FB1H471K	CHIP C	470PF	K	
C381,382			CK73FB1H103K	CHIP C	0.010UF	K	
C383			CK73GB1H102K	CHIP C	1000PF	K	
C384			CK73FB1H102K	CHIP C	1000PF	K	
C385			CK73GB1H103K	CHIP C	0.010UF	K	
C386			CK73FB1H103K	CHIP C	0.010UF	K	
C387			CK73GB1H103K	CHIP C	0.010UF	K	
C388			CK73FB1H471K	CHIP C	470PF	K	
C389,390			CK73GB1H471K	CHIP C	470PF	K	
C391-394			CK73FB1H103K	CHIP C	0.010UF	K	
C395			CK73GB1H103K	CHIP C	0.010UF	K	
C400			CC73FSL1H471J	CHIP C	470PF	J	
C401			CK73FB1H103K	CHIP C	0.010UF	K	
C402			C90-2167-05	ELECTRO	100UF	16WV	
CN1			E40-3239-05	PIN CONNECTOR (4P)			
CN3			E40-3239-05	PIN CONNECTOR (4P)			
CN4			E40-3242-05	PIN CONNECTOR (7P)			
CN5		*	E40-5747-05	PIN CONNECTOR (11P)			
CN6			E40-3243-05	PIN CONNECTOR (8P)			
CN7			E40-5736-05	FLAT CABLE CONNECTOR (26P)			
CN8		*	E40-5740-05	FLAT CABLE CONNECTOR (20P)			
CN9			E40-3240-05	PIN CONNECTOR (5P)			
CN10			E40-3238-05	PIN CONNECTOR (3P)			
CN11		*	E40-5741-05	FLAT CABLE CONNECTOR (8P)			
CN12			E40-3237-05	PIN CONNECTOR (2P)			
CN13			E04-0191-05	RF COAXIAL CABLE SOCKET			
CN14-16			E02-2015-05	SOCKET FOR IC			
CN17			E40-5067-05	PIN CONNECTOR (10P)			

PARTS LSIT

TX-RX UNIT (X57-4620-00)

Ref. No.	Address	New parts	Parts No.	Description	Destination
J1			E11-0455-05	PHONE JACK (3.5D)	
J2			E11-0431-05	PHONE JACK	
J4			E63-0401-05	PHONO JACK	
J5			E06-1352-05	DIN SOCKET	
J6			E11-0455-05	PHONE JACK (3.5D)	
J7		*	E58-0428-05	SUB PLUG (D) 9P	
W1		*	E37-0536-05	LEAD WIRE WITH MINIPIN PLUG	
A1	4G	*	F01-1005-04	HEAT SINK	
A2	4F		F11-1127-04	SHIELDING CASE	
A3,4	4G		G02-0574-04	FLAT SPRING	
A5	4G		G02-0719-04	FLAT SPRING	
CF1,2			L72-0374-05	CERAMIC FILTER (455KHZ)	
CF3			L72-0366-05	CERAMIC FILTER (455KHZ)	
L1			L40-2285-48	SMALL FIXED INDUCTOR (220NH)	
L2			L40-4785-48	SMALL FIXED INDUCTOR	
L3			L40-1011-15	SMALL FIXED INDUCTOR	
L4		*	L34-4397-05	COIL	
L5			L40-1011-15	SMALL FIXED INDUCTOR	
L8		*	L40-4711-15	SMALL FIXED INDUCTOR	
L9			L40-1011-15	SMALL FIXED INDUCTOR	
L10			L40-1092-12	SMALL FIXED INDUCTOR	
L11-17			L40-1011-15	SMALL FIXED INDUCTOR	
L18			L40-1001-15	SMALL FIXED INDUCTOR	
L19,20		*	L39-1245-05	COIL	
L21		*	L40-2711-33	SMALL FIXED INDUCTOR	
L22,23			L40-2201-12	SMALL FIXED INDUCTOR	
L24,25			L40-1092-12	SMALL FIXED INDUCTOR	
L26			L40-1001-15	SMALL FIXED INDUCTOR	
R1			RK73FB2A103J	CHIP R 10K J 1/10W	
R2,3			RK73GB1J103J	CHIP R 10K J 1/16W	
R4-6			RK73GB1J101J	CHIP R 100 J 1/16W	
R7			RK73FB2A103J	CHIP R 10K J 1/10W	
R8			RK73GB1J682J	CHIP R 6.8K J 1/16W	
R9			RK73GB1J222J	CHIP R 2.2K J 1/16W	
R10			RK73GB1J330J	CHIP R 33 J 1/16W	
R11			RK73GB1J183J	CHIP R 18K J 1/16W	
R12			RK73FB2A103J	CHIP R 10K J 1/10W	
R13			RK73GB1J101J	CHIP R 100 J 1/16W	
R16			RK73GB1J680J	CHIP R 68 J 1/16W	
R17,18			RK73FB2A222J	CHIP R 2.2K J 1/10W	
R19			RK73GB1J101J	CHIP R 100 J 1/16W	
R21-24			RK73FB2A103J	CHIP R 10K J 1/10W	
R50			RK73GB1J682J	CHIP R 6.8K J 1/16W	
R51			RK73FB2A104J	CHIP R 100K J 1/10W	
R52			RK73GB1J392J	CHIP R 3.9K J 1/16W	
R53			RK73GB1J221J	CHIP R 220 J 1/16W	
R54			RK73GB1J152J	CHIP R 1.5K J 1/16W	
R55,56			RK73GB1J103J	CHIP R 10K J 1/16W	
R57			RK73GB1J334J	CHIP R 330K J 1/16W	
R58			RK73GB1J470J	CHIP R 47 J 1/16W	
R59			RK73GB1J151J	CHIP R 150 J 1/16W	
R60			RK73GB1J152J	CHIP R 1.5K J 1/16W	
R61			RK73GB1J333J	CHIP R 33K J 1/16W	
R62			RK73GB1J223J	CHIP R 22K J 1/16W	
R63			RK73GB1J102J	CHIP R 1.0K J 1/16W	
R64,65			RK73GB1J470J	CHIP R 47 J 1/16W	
R66			RK73GB1J221J	CHIP R 220 J 1/16W	

Ref. No.	Address	New parts	Parts No.	Description	Destination
R100			RK73FB2A100J	CHIP R 10 J 1/10W	
R101			RK73GB1J472J	CHIP R 4.7K J 1/16W	
R103			RK73GB1J102J	CHIP R 1.0K J 1/16W	
R104			RK73GB1J472J	CHIP R 4.7K J 1/16W	
R105			RK73GB1J102J	CHIP R 1.0K J 1/16W	
R106			RK73GB1J154J	CHIP R 150K J 1/16W	
R109			RK73GB1J102J	CHIP R 1.0K J 1/16W	
R110			RK73GB1J223J	CHIP R 22K J 1/16W	
R111			RK73GB1J222J	CHIP R 2.2K J 1/16W	
R113			RK73GB1J104J	CHIP R 100K J 1/16W	
R114			RK73GB1J472J	CHIP R 4.7K J 1/16W	
R117			RK73GB1J823J	CHIP R 82K J 1/16W	
R118			RK73GB1J222J	CHIP R 2.2K J 1/16W	
R119,120			RK73GB1J223J	CHIP R 22K J 1/16W	
R121,122			RK73GB1J123J	CHIP R 12K J 1/16W	
R123			RK73GB1J223J	CHIP R 22K J 1/16W	
R124			RK73GB1J103J	CHIP R 10K J 1/16W	
R126			RK73GB1J183J	CHIP R 18K J 1/16W	
R127,128			RK73GB1J103J	CHIP R 10K J 1/16W	
R129			RK73GB1J472J	CHIP R 4.7K J 1/16W	
R130			RK73GB1J223J	CHIP R 22K J 1/16W	
R131			RK73GB1J101J	CHIP R 100 J 1/16W	
R132			RK73GB1J472J	CHIP R 4.7K J 1/16W	
R133			RK73GB1J103J	CHIP R 10K J 1/16W	
R134,135			RK73GB1J152J	CHIP R 1.5K J 1/16W	
R136			RK73GB1J331J	CHIP R 330 J 1/16W	
R137			RK73FB2A102J	CHIP R 1.0K J 1/10W	
R138			RK73GB1J152J	CHIP R 1.5K J 1/16W	
R139			RK73GB1J223J	CHIP R 22K J 1/16W	
R140			RK73GB1J470J	CHIP R 47 J 1/16W	
R141			RK73GB1J392J	CHIP R 3.9K J 1/16W	
R142,143			RK73GB1J222J	CHIP R 2.2K J 1/16W	
R144			RK73GB1J101J	CHIP R 100 J 1/16W	
R145			RK73GB1J472J	CHIP R 4.7K J 1/16W	
R146,147			RK73GB1J101J	CHIP R 100 J 1/16W	
R148			RK73GB1J471J	CHIP R 470 J 1/16W	
R149			RK73GB1J101J	CHIP R 100 J 1/16W	
R150			RK73GB1J471J	CHIP R 470 J 1/16W	
R151			RK73GB1J472J	CHIP R 4.7K J 1/16W	
R152			RK73GB1J152J	CHIP R 1.5K J 1/16W	
R153,154			RK73GB1J331J	CHIP R 330 J 1/16W	
R155			RK73GB1J222J	CHIP R 2.2K J 1/16W	
R156			RK73GB1J332J	CHIP R 3.3K J 1/16W	
R157			RK73GB1J222J	CHIP R 2.2K J 1/16W	
R158,159			RK73GB1J472J	CHIP R 4.7K J 1/16W	
R160			RK73GB1J103J	CHIP R 10K J 1/16W	
R161			RK73GB1J222J	CHIP R 2.2K J 1/16W	
R162,163			RK73GB1J331J	CHIP R 330 J 1/16W	
R164			RK73GB1J222J	CHIP R 2.2K J 1/16W	
R165			RK73GB1J331J	CHIP R 330 J 1/16W	
R166			RK73GB1J392J	CHIP R 3.9K J 1/16W	
R167			RK73GB1J472J	CHIP R 4.7K J 1/16W	
R168			RK73GB1J100J	CHIP R 10 J 1/16W	
R169			RK73GB1J471J	CHIP R 470 J 1/16W	
R170			RK73GB1J101J	CHIP R 100 J 1/16W	
R171,172			RK73FB2A100J	CHIP R 10 J 1/10W	
R173			RK73GB1J101J	CHIP R 100 J 1/16W	
R174			RK73GB1J123J	CHIP R 12K J 1/16W	
R175			RK73FB2A123J	CHIP R 12K J 1/10W	

PARTS LIST

TX-RX UNIT (X57-4620-00)

Ref. No.	Address	New parts	Parts No.	Description	Destination
R176			RK73FB2A183J	CHIP R 18K J 1/10W	
R177			RK73GB1J183J	CHIP R 18K J 1/16W	
R178			RK73FB2A153J	CHIP R 15K J 1/10W	
R179			RK73GB1J103J	CHIP R 10K J 1/16W	
R180			RK73GB1J821J	CHIP R 820 J 1/16W	
R181			RK73GB1J222J	CHIP R 2.2K J 1/16W	
R182			RK73GB1J103J	CHIP R 10K J 1/16W	
R183			RK73FB2A153J	CHIP R 15K J 1/10W	
R184			RK73GB1J272J	CHIP R 2.7K J 1/16W	
R185			RK73GB1J153J	CHIP R 15K J 1/16W	
R186			RK73FB2A222J	CHIP R 2.2K J 1/10W	
R187			RK73GB1J223J	CHIP R 22K J 1/16W	
R188			RK73GB1J101J	CHIP R 100 J 1/16W	
R189,190			RK73GB1J153J	CHIP R 15K J 1/16W	
R191,192			RK73GB1J222J	CHIP R 2.2K J 1/16W	
R193,194			RK73GB1J223J	CHIP R 22K J 1/16W	
R196			RK73FB2A472J	CHIP R 4.7K J 1/10W	
R197			RK73GB1J103J	CHIP R 10K J 1/16W	
R198,199			RK73GB1J104J	CHIP R 100K J 1/16W	
R200			RK73FB2A101J	CHIP R 100 J 1/10W	
R201			RK73GB1J221J	CHIP R 220 J 1/16W	
R202,203			RK73GB1J104J	CHIP R 100K J 1/16W	
R204			RK73GB1J222J	CHIP R 2.2K J 1/16W	
R205			RK73GB1J272J	CHIP R 2.7K J 1/16W	
R206			RK73GB1J224J	CHIP R 220K J 1/16W	
R207			RK73GB1J222J	CHIP R 2.2K J 1/16W	
R208			RK73GB1J123J	CHIP R 12K J 1/16W	
R209			RK73GB1J563J	CHIP R 56K J 1/16W	
R215			RK73GB1J681J	CHIP R 680 J 1/16W	
R220			RK73GB1J103J	CHIP R 10K J 1/16W	
R300			RK73FB2A100J	CHIP R 10 J 1/10W	
R301			RK73GB1J101J	CHIP R 100 J 1/16W	
R303-319			RK73GB1J101J	CHIP R 100 J 1/16W	
R320			RK73GB1J102J	CHIP R 1.0K J 1/16W	
R323			RK73GB1J101J	CHIP R 100 J 1/16W	
R325			RK73FB2A473J	CHIP R 47K J 1/10W	
R330			RK73GB1J470J	CHIP R 47 J 1/16W	
R331			RK73GB1J102J	CHIP R 1.0K J 1/16W	
R332			RK73GB1J222J	CHIP R 2.2K J 1/16W	
R334			RK73GB1J331J	CHIP R 330 J 1/16W	
R335			RK73GB1J101J	CHIP R 100 J 1/16W	
R336			RK73GB1J102J	CHIP R 1.0K J 1/16W	
R337,338			RK73GB1J124J	CHIP R 120K J 1/16W	
R339,340			RK73GB1J334J	CHIP R 330K J 1/16W	
R343			RK73GB1J471J	CHIP R 470 J 1/16W	
R344			RK73FB2A2R2J	CHIP R 2.2 J 1/10W	
R345-347			RK73GB1J101J	CHIP R 100 J 1/16W	
R348,349			RK73GB1J473J	CHIP R 47K J 1/16W	
R350,351			RK73FB2A473J	CHIP R 47K J 1/10W	
R352-354			RK73GB1J473J	CHIP R 47K J 1/16W	
R355			RK73GB1J103J	CHIP R 10K J 1/16W	
R356			RK73GB1J473J	CHIP R 47K J 1/16W	
R357			RK73GB1J103J	CHIP R 10K J 1/16W	
R358			RK73GB1J473J	CHIP R 47K J 1/16W	
R359			RK73GB1J101J	CHIP R 100 J 1/16W	
R364,365			RK73GB1J222J	CHIP R 2.2K J 1/16W	
R366			R92-1252-05	CHIP R 0 OHM	
R367,368			RK73FB2A473J	CHIP R 47K J 1/10W	
R369			RK73GB1J473J	CHIP R 47K J 1/16W	

Ref. No.	Address	New parts	Parts No.	Description	Destination
R371-374			RK73GB1J473J	CHIP R 47K J 1/16W	
R376			RK73GB1J473J	CHIP R 47K J 1/16W	
R377,378			RK73FB2A473J	CHIP R 47K J 1/10W	
R379			RK73GB1J473J	CHIP R 47K J 1/16W	
R380-418			RK73FB2A103J	CHIP R 10K J 1/10W	
R419-428			RK73GB1J101J	CHIP R 100 J 1/16W	
R429			RK73FB2A103J	CHIP R 10K J 1/10W	
R430			RK73GB1J472J	CHIP R 4.7K J 1/16W	
R431,432			RK73GB1J103J	CHIP R 10K J 1/16W	
R433			RK73GB1J102J	CHIP R 1.0K J 1/16W	
R434			RK73GB1J470J	CHIP R 47 J 1/16W	
R435,436			RK73GB1J472J	CHIP R 4.7K J 1/16W	
VR1,2			R12-6732-05	TRIMMING POT. 470	
VR3			R12-6742-05	TRIMMING POT. 22K	
D1-4			RLS73	DIODE	
D5			1SV166	DIODE	
D7			DAP202K	DIODE	
D8			RLS73	DIODE	
IC1,2		*	DSP56002FC40	IC	
IC3		*	MBCG24173-6173	IC (GATE ARRAY)	
IC4		*	27C256PCJJTC-K	IC	
IC5		*	27C256PCJJUC-K	IC	
IC6		*	27C256PCJJVC-K	IC	
IC7		*	MCM56824AFN20	IC	
IC7		*	MCM56824AFN25	IC	
IC9		*	7032LC44JLQA	IC	
IC15			MB86001PF	IC	
IC16			AK4318-VS	IC	
IC17			NJM2100M	IC (OP AMPLIFIER)	
IC18			MC74HC4053F	IC (ANALOG SW)	
IC19-21			NJM4560M	IC (OP AMP X2)	
IC22		*	AD822AR	IC	
IC23			MC74HC4052F	IC (HPF)	
IC24			NJM2100M	IC (OP AMPLIFIER)	
IC25			AK5340-VS	IC (AD CONVERTER (18 Bit))	
IC26			M62363FP	IC (8bit D/A CONVERTER)	
IC27			AK4318-VS	IC	
IC28			NJM2100M	IC (OP AMPLIFIER)	
IC29			M51131L	IC (ELECTRO VOLUME)	
IC30			NJM2100M	IC (OP AMPLIFIER)	
IC31			M51131L	IC (ELECTRO VOLUME)	
IC33			LA4422	IC (AF POWER AMP/ 5.8W)	
IC34			PCM69AU	IC (18bit D/A CONVERTOR)	
IC35		*	AD822AR	IC	
IC36			NJM4560M	IC (OP AMP X2)	
IC37,38			UPC7805H	IC (VOLTAGE REGULATOR/ +5V)	
IC39			NJM78L05UA	IC (VOLTAGE REGULATOR/ +5V)	
IC40			NJM78L08UA	IC (VOLTAGE REGULATOR/ +8V)	
IC41,42			NJM3404AM	IC (OP AMP X2)	
IC43			NJM5532M	IC (OP AMP)	
IC44			TC7S04F	IC (2CH NAND GATE)	
Q1			DTC124EK	DIGITAL TRANSISTOR	
Q2,3			2SC2714(Y)	TRANSISTOR	
Q4			DTC124EK	DIGITAL TRANSISTOR	
Q5-7			2SC3324(G)	TRANSISTOR	
Q8			2SK210(GR)	FET	
Q9,10			2SC2714(Y)	TRANSISTOR	
Q12			2SC2712(Y)	TRANSISTOR	
Q13-17			2SC2412K(S)	TRANSISTOR	

PARTS LSIT

TX-RX UNIT (X57-4620-00)
VCO2 (X58-3390-03)

Ref. No.	Address	New parts	Parts No.	Description	Destination
Q22			DTC124EK	DIGITAL TRANSISTOR	
Q23			2SC2712(Y)	TRANSISTOR	
Q25			DTA143EK	DIGITAL TRANSISTOR	
Q26			DTC124XK	DIGITAL TRANSISTOR	
Q27			DTC143EK	DIGITAL TRANSISTOR	
VCO2 (X58-3390-03)					
-			B42-2437-04	S/NO LABEL	
C1			CK73FB1H102K	CHIP C 1000PF K	
C2			CC73FSL1H101J	CHIP C 100PF J	
C3			CC73FCH1H070D	CHIP C 7.0PF D	
C4			CC73FCH1H070D	CHIP C 7.0PF D	
C4			CC73FCH1H220J	CHIP C 22PF J	
C6			CC73FCH1H180J	CHIP C 18PF J	
C7			CC73FCH1H120J	CHIP C 12PF J	
C8,9			CK73FB1H102K	CHIP C 1000PF K	
C10			CC73FCH1H010C	CHIP C 1.0PF C	
C1*			CK73FB1H102K	CHIP C 1000PF K	
TC1			C05-0331-15	TRIMMER CAPACITOR 10PF	
TP1-3			E23-0464-05	TERMINAL	
-			F11-1085-04	SHIELDING CASE	
			F11-1086-14	SHIELDING COVER	
-			G13-0904-04	CUSHION (COVER)	
L1			L33-0690-05	CHOKE COIL (3.3UH)	
L2			L34-2353-05	COIL	
T	2C		N30-2604-41	PAN HEAD MACHIN SCREW	
R1			RK73FB2A682J	CHIP R 6.8K J 1/10W	
R2			RK73FB2A271J	CHIP R 270 J 1/10W	
R3			RK73FB2A330J	CHIP R 33 J 1/10W	
R4,5			RK73FB2A472J	CHIP R 4.7K J 1/10W	
R6			RK73FB2A471J	CHIP R 470 J 1/10W	
R7			RK73FB2A560J	CHIP R 56 J 1/10W	
D1			1SV164	DIODE	
Q1			2SK508NV(K52)	FET	
Q2			2SC2714(Y)	TRANSISTOR	

EXPLODED VIEW

H	M3 x 6 (F)	: N32-3006-46
I	M3 x 6 (OC)	: N33-3006-41
J	M2.6 x 6 (Br-Tap)	: N87-2606-46
K	M3 x 6 (Br-Tap)	: N87-3006-46
M	M2.6 x 8 (F-Tap)	: N88-2608-46
P	M3 x 10 (TP-T)	: N91-3010-46

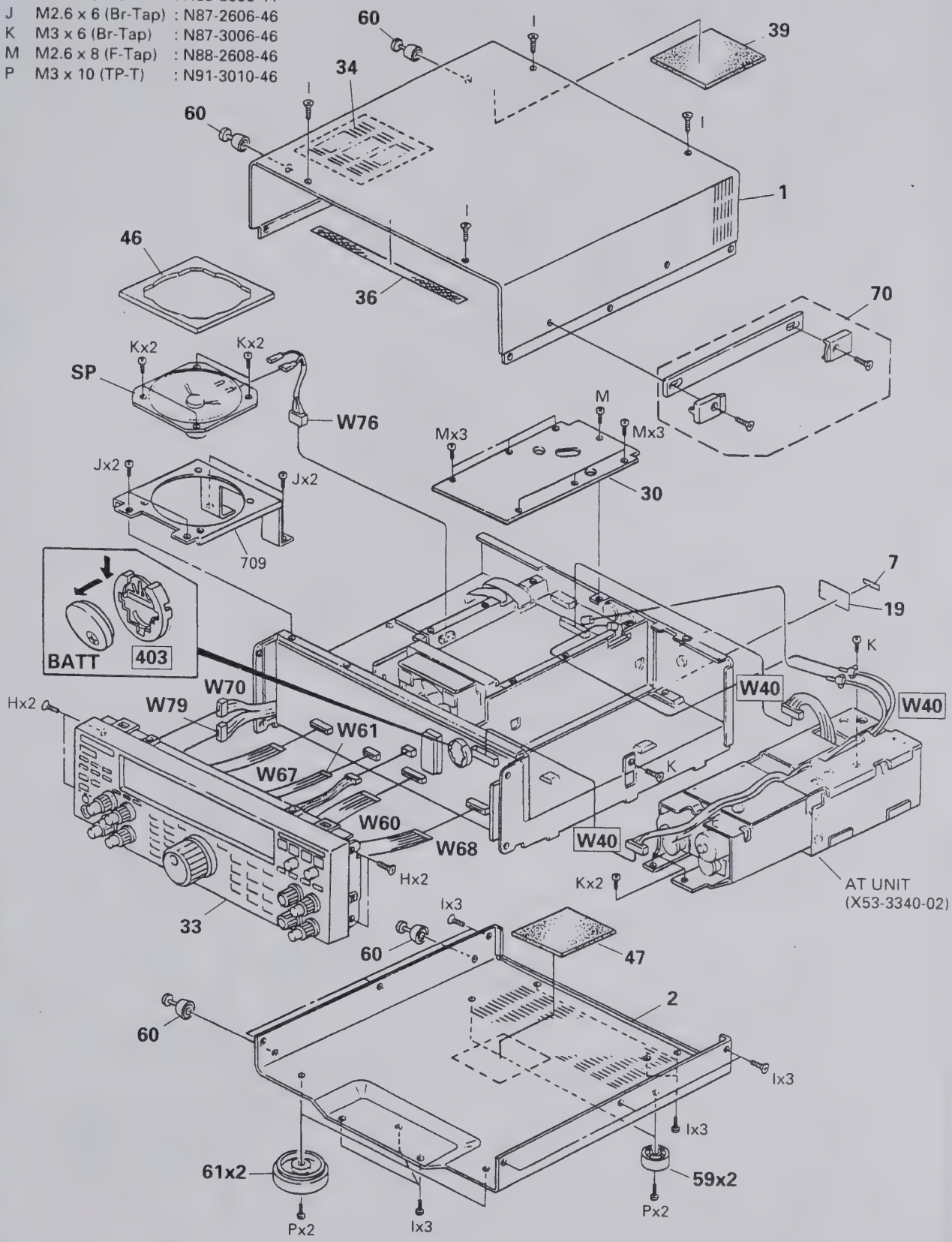

Parts with the exploded numbers larger than 700 are not supplied.

EXPLODED VIEW

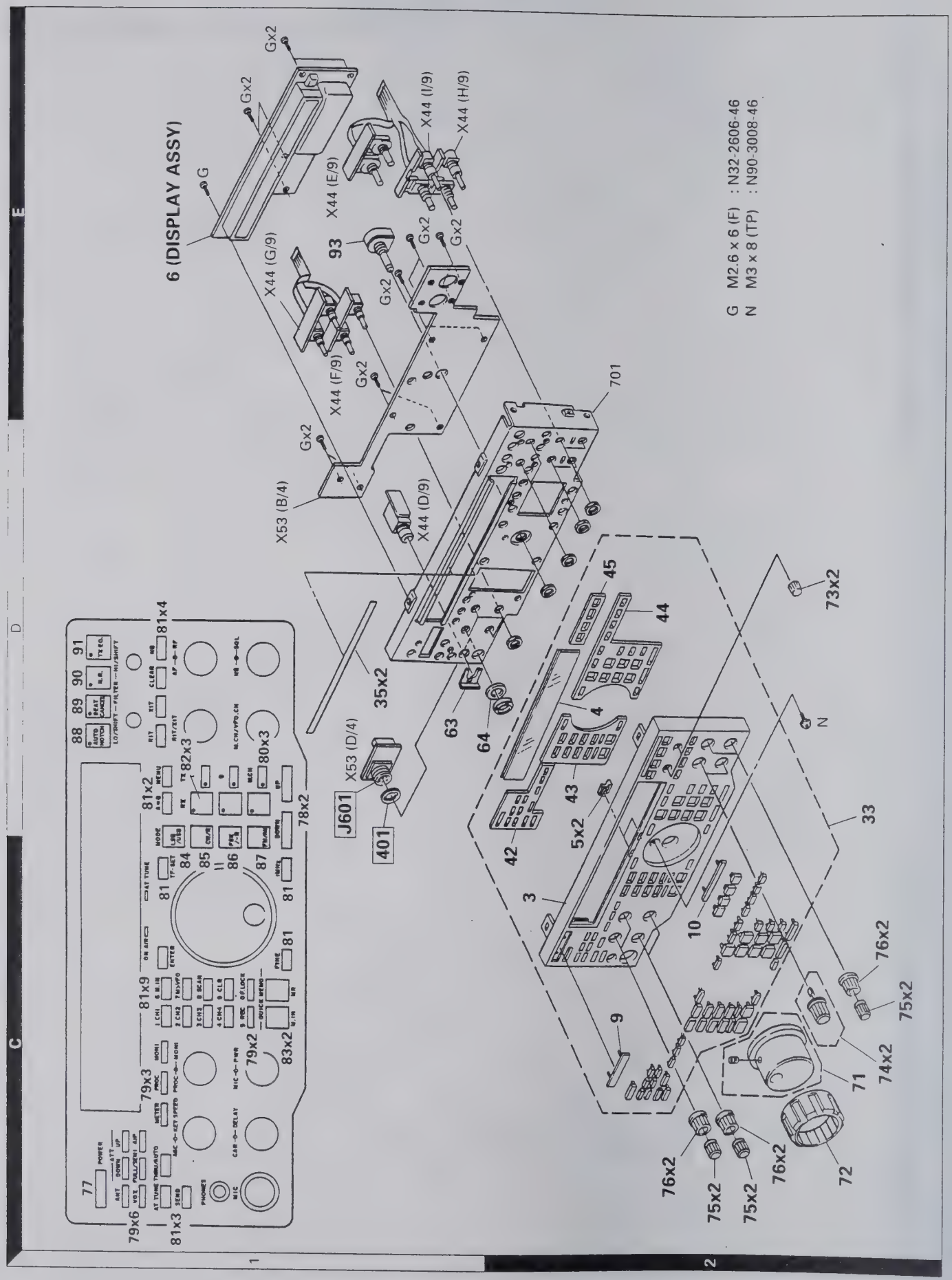

Parts with the exploded numbers larger than 700 are not supplied.

EXPLODED VIEW

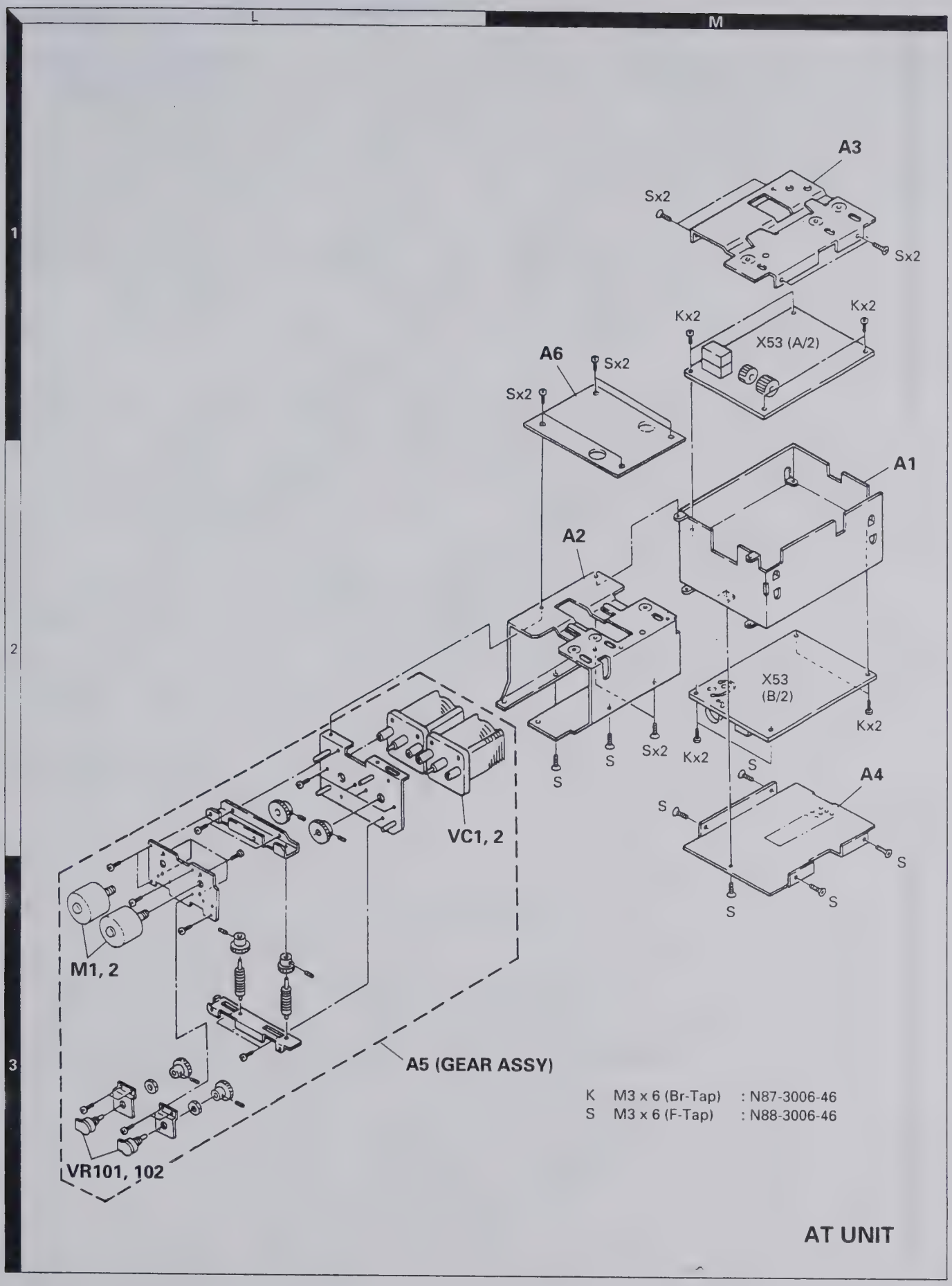

PACKING

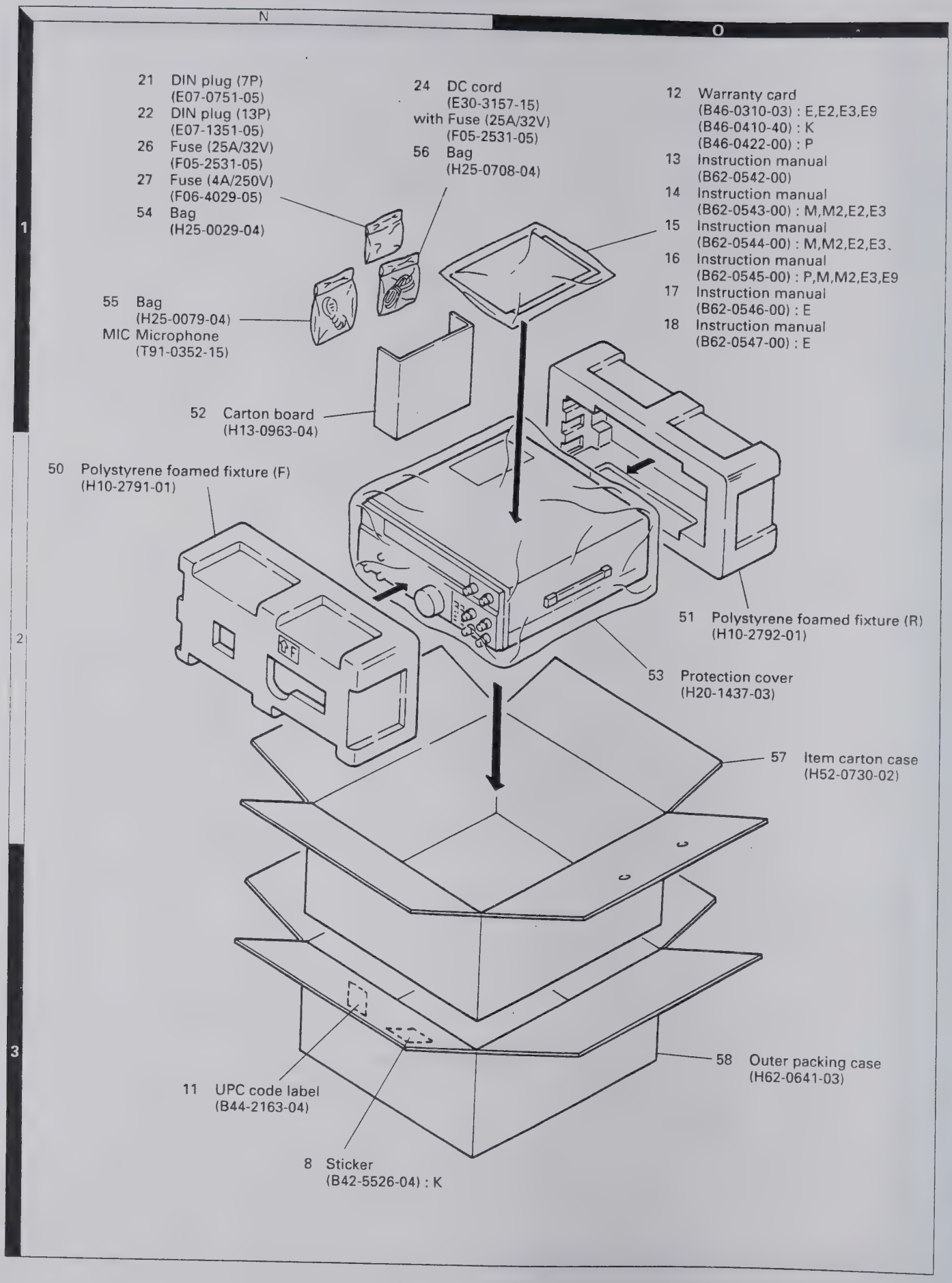
N
O
1
2
3
21 DIN plug (7P)
(E07-0751-05)
22 DIN plug (13P)
(E07-1351-05)
26 Fuse (25A/32V)
(F05-2531-05)
27 Fuse (4A/250V)
(F06-4029-05)
54 Bag
(H25-0029-04)
24 DC cord
(E30-3157-15)
with Fuse (25A/32V)
(F05-2531-05)
56 Bag
(H25-0708-04)
12 Warranty card
(B46-0310-03) : E,E2,E3,E9
(B46-0410-40) : K
(B46-0422-00) : P
13 Instruction manual
(B62-0542-00)
14 Instruction manual
(B62-0543-00) : M,M2,E2,E3
15 Instruction manual
(B62-0544-00) : M,M2,E2,E3
16 Instruction manual
(B62-0545-00) : P,M,M2,E3,E9
17 Instruction manual
(B62-0546-00) : E
18 Instruction manual
(B62-0547-00) : E
55 Bag
(H25-0079-04)
MIC Microphone
(T91-0352-15)
52 Carton board
(H13-0963-04)
50 Polystyrene foamed fixture (F)
(H10-2791-01)
51 Polystyrene foamed fixture (R)
(H10-2792-01)
53 Protection cover
(H20-1437-03)
57 Item carton case
(H52-0730-02)
58 Outer packing case
(H62-0641-03)
11 UPC code label
(B44-2163-04)
8 Sticker
(B42-5526-04) : K

ADJUSTMENT

Required Test Equipment

1. DC Voltmeter (DC V.M)
1) Input resistance : More than 1MΩ
2) Voltage range : 1.5 to 1000V AC/DC
Note : A high-recision multimeter may be used. However, accurate readings can not be obtained for high-impedance circuits.

2. DC Ammeter
1) Current range : 100mA, 1.5A, 15A, high-precision ammeter may be used.

3. RF VTVM (RF V.M)
1) Input impedance : 1MΩ and less than 3pF, min.
2) Voltage range : 10mV to 300V
3) Frequency range : 10kHz to 500MHz

4. AF Voltmeter (AF V.M)
1) Frequency range : 50Hz to 10kHz
2) Input resistance : 1MΩ or greater
3) Voltage range : 10mV to 30V

5. AF Generator (AG)
1) Frequency range : 200Hz to 5kHz
2) Output : 1mV or less to 1V, low distortion

6. AF Dummy Load (DM. SP)
1) Impedance : 8Ω
2) Dissipation : 3W or greater

7. Oscilloscope
Requires high sensitivity, and external synchronization capability (150MHz or greater).

8. Sweep Generator (Sweep G.)
1) Center frequency : 50kHz to 90MHz
2) Frequency deviation : Maximum ±35kHz
3) Output voltage : 100mV or greater

9. Standard Signal Generator (SSG)
1) Frequency range : 50kHz to 50MHz
2) Output : –133dBm/0.05μV to 7dBm/500mV
3) Output impedance : 50Ω
4) AM and FM modulation can be possible
Note : Generator must be frequency stable.

10. Frequency Counter (f. counter)
1) Minimum input voltage : 50mV
2) Frequency range : 150MHz or greater

11. Noise Generator (Noise G.)
Must generate ignition noise containing harmonics beyond 30MHz.

12. RF Dummy Load
1) Impedance : 150Ω and 50Ω
2) Dissipation : 150W or greater

13. Linear Detector
1) Frequency range : 30MHz

14. Power Meter
1) Impedance : 50Ω
2) Dissipation : 300W continuous or greater
3) Frequency limits : 60MHz or greater

15. Spectrum Analyzer
1) Frequency range : 100kHz to 110MHz or greater
2) Bandwidth : 1kHz to 3MHz

16. Detector
1) For adjustment of BPF

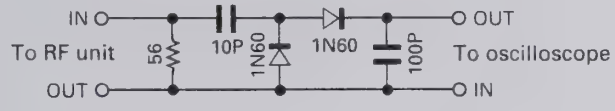

2) For adjustment of PLL/VCO BPF

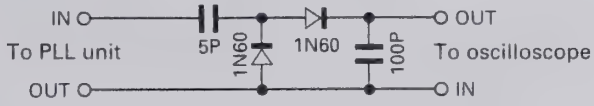

17. Directional Coupler

18. Monitor Receiver
R-1000 class

19. Microphone
MC-43S or MC-60S8

20. Tracking Generator

21. Distortion Meter

22. Double Signal Pad (50Ω)

ADJUSTMENT

Preparation

Unless otherwise specified, knobs and switches should be set as follows.

POWER	ON	PROCESSOR	Center
ATT	0	MIC	Center
AGC	Center	PWR	MAX
NB LEVEL	Center	CAR	Center
SQL	0		
AF	0		
RF	MAX		

Front Panel

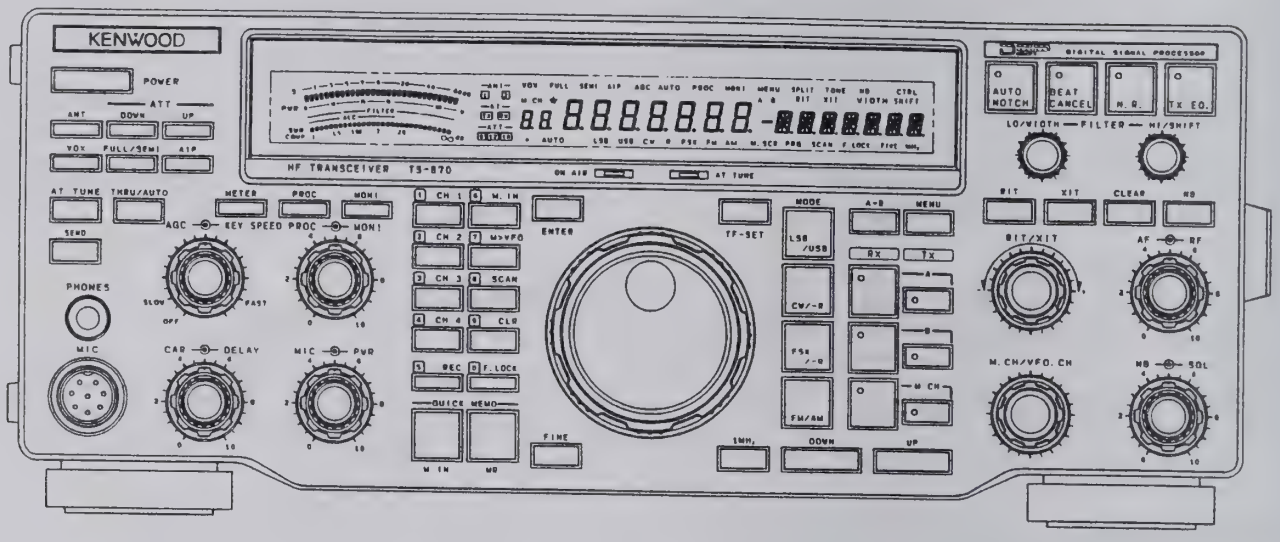

Rear Panel

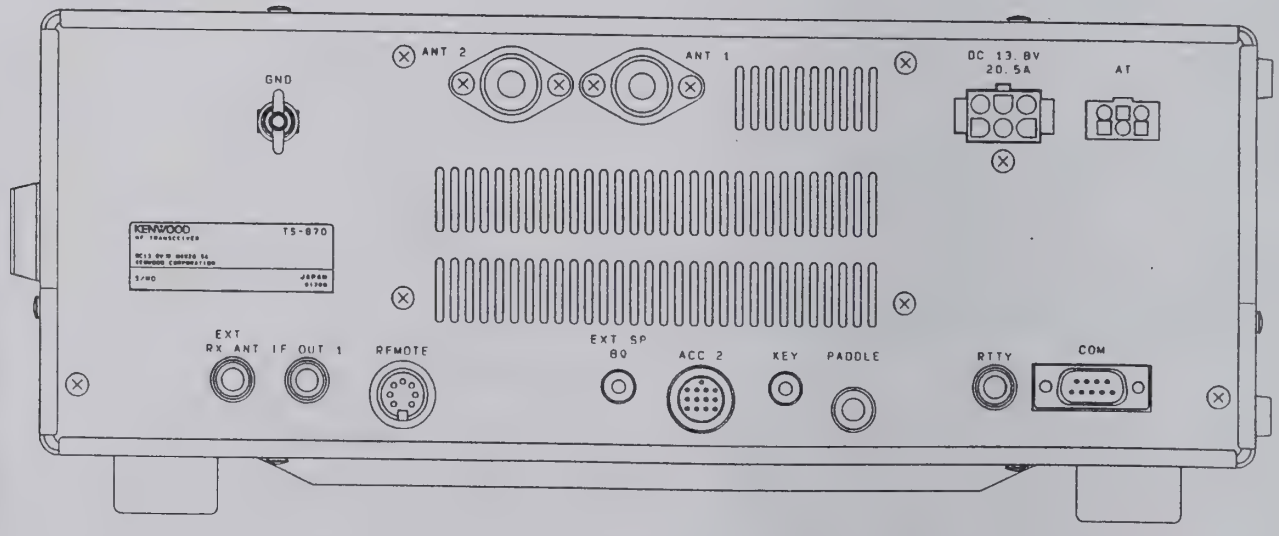

ADJUSTMENT

Service Jig

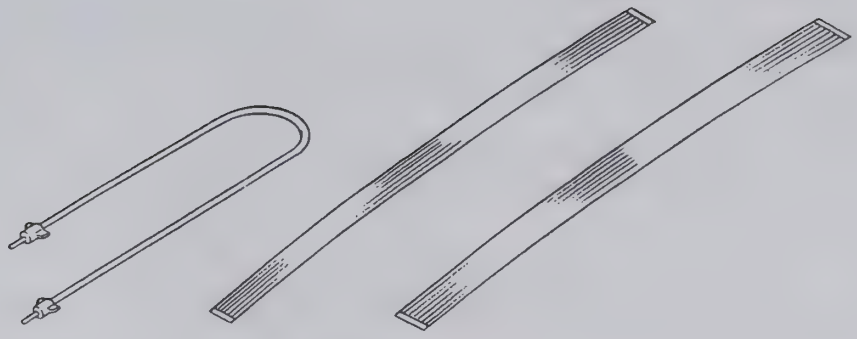

A. Lead wire with minipin plug
(E37-0064-05)
About 27cm

B . Flat cable (8P)
(E37-0581-05)
About 25cm

C. Flat cable (12P)
(E37-0580-05)
About 25cm

How to Use

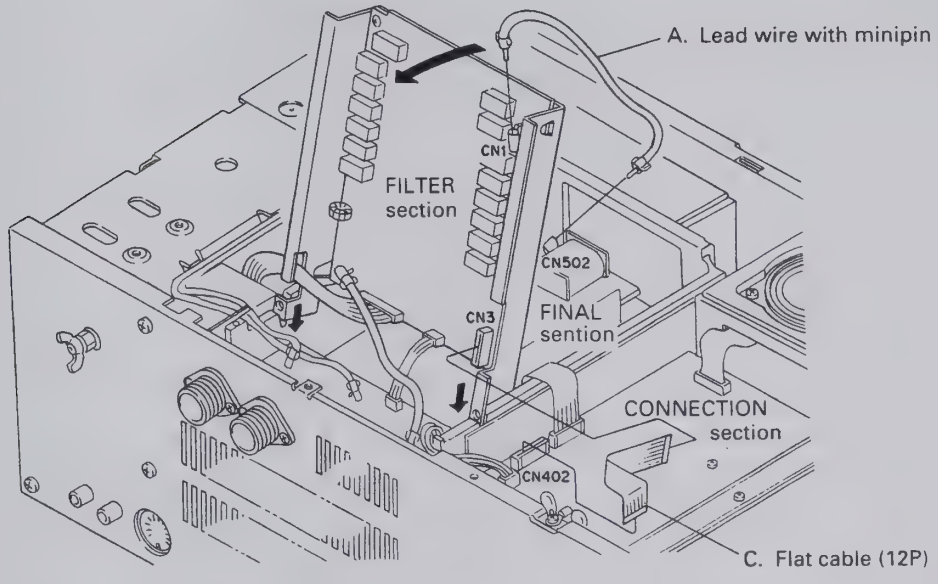

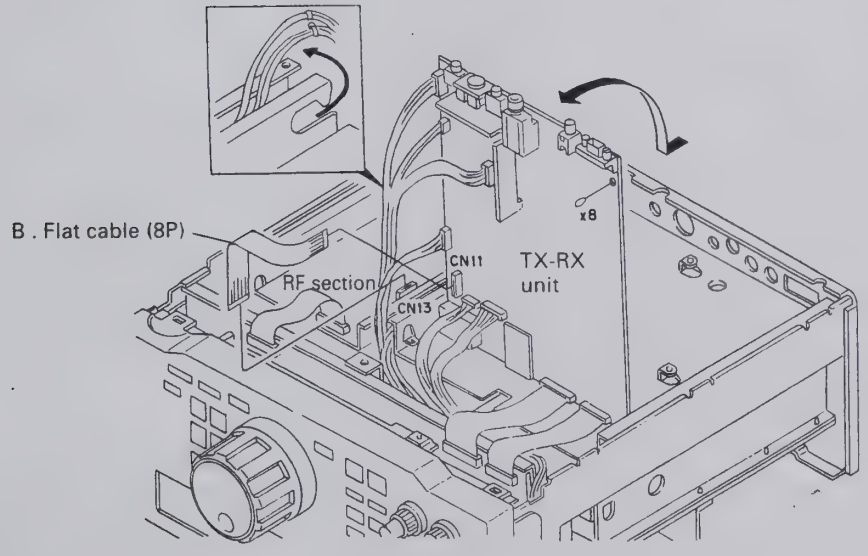

ADJUSTMENT

Service Adjustment Mode

■ Outline

- The TS-870S is adjusted by the normal method and by another method using the service adjustment mode.
- In the adjustment mode, there are 28 menu numbers A0 to BB. All adjustment data items are saved in the EEPROM.
- When the service adjustment mode is entered, data is read from the EEPROM and placed in the CPU RAM so that settings can be modified.
- The EEPROM is updated only when data is written in Menu No. BA.

  Note : Transmission is possible in reception-related adjustment modes.

■ Operation procedure

1. Adjustment mode start
   Hold down the [N.R.] key and [LSB/USB] key, and turn the [POWER] switch ON to enter the adjustment mode. The menu number will appear in M. CH on the display.
2. Adjustment mode menu number selection
   When the [M. CH/VFO. CH] control is turned, the menu number changes.
3. Adjustment mode data writing
   Press the [UP]/[DOWN] key or the microphone [UP]/[DOWN] key in MENU No. BA.
4. Adjustment mode cancel
   When the [CLR] key is pressed, the normal memory-channel display returns.

   Note : If the power is switched OFF in the adjustment mode, it is canceled.

Service Adjustment Mode Menu

Menu No.	Adjustment function	Description
A0	System	Checksum display (Program version confirmation)
A1	ALC	ALC reference voltage adjustment
A2	S-meter (SSB)	Start level setting
A3		S9 level setting
A4		Full-scale level setting
A5	Filter	8.83MHz IF filter center frequency correction
A6		455kHz IF filter center frequency correction
A7	Power adjustment	100W adjustment (With power meter curve)
A8		50W adjustment (With power meter curve)
A9		25W adjustment (With power meter curve)
AA		10W adjustment (With power meter curve)
AB	TX gain	1.9MHz band
AC		3.5MHz band
AD		7MHz band
AE		10MHz band
AF		14MHz band
B0		18MHz band
B1		21MHz band
B2		24.5MHz band
B3		29MHz band
B4	ALC meter	Stare level setting
B5		Maximum zone level setting
B6		Full-scale level setting
B7	SWR protection	Protection operation setting
B8	SWR meter	VSWR=3 level setting
B9	FM	FM deviation setting
BA	System	Writing into EEPROM
BB	Display	All LCD segments light (Not light ON AIR lamp)

ADJUSTMENT

Display Check

Item	Condition	Measurement			Adjustment			Specifications/Remarks
		Test-equipment	Unit	Terminal	Unit	Parts	Method	
1. All reset	1) DC IN : DC 13.8V Pushing [A=B] key down, [POWER] : ON.				Front panel	Display	After displaying HELLO, the display is reset as follows: DISP f. : 14.000.00 MODE : USB METER : ALC ANT : 1 AGC	Display should be normal Should be at the reset frequency.
2. All LCD segments light	1) Menu No. : BB						Check	All LCD segments light.

PLL Section

Item	Condition	Measurement			Adjustment			Specifications/Remarks
		Test-equipment	Unit	Terminal	Unit	Parts	Method	
1. 20MHz frequency adj.	1) [POWER] : ON MODE : FM Receive	f. counter	PLL	CN510 (TP)	PLL	TC800	Frequency adjust.	20.000MHz ± 20Hz
2. 20MHz peak adj.	1) Display f. : 14.000MHz MODE : USB Receive	RF V.M		CN503		L528	MAX.	
3. 60MHz BPF adj.	1) MODE : FM Receive			IC506 2 pin		L529 L530	Repeat for MAX.	
4. 55MHz BPF adj. and frequency check	1) Display f. : 14.000MHz MODE : FM Receive			IC508 11 pin		L518 L519 L520	Repeat for MAX.	
	2) Display f. : 14.000MHz	f. counter					Frequency check	55.299~55.301MHz
5. Lock voltage adj. & check VCO1	1) Display f. : 30kHz	DC V.M		TP501	PLL	TC506	1.8V	1.8 ± 0.03V
	2) Display f. : 7.489MHz						Voltage check	4.5~7.0V
6. Lock voltage adj. & check VCO2	1) Display f. : 7.500MHz				PLL	TC507	1.8V	1.8 ± 0.03V
	2) Display f. : 14.489MHz						Voltage check	4.5~7.0V
7. Lock voltage adj. & check VCO3	1) Display f. : 14.490MHz				PLL	TC508	1.8V	1.8 ± 0.03V
	2) Display f. : 21.489MHz						Voltage check	4.5~7.0V
8. Lock voltage adj. & check VCO4	1) Display f. : 21.490MHz				PLL	TC509	1.8V	1.8 ± 0.03V
	2) Display f. : 30.000MHz						Voltage check	4.5~7.0V
9. Lock voltage adj. LO2A (VCO2) X58-3390-03	1) Display f. : 30.000MHz			TP502	VCO2 X58-3390	TC1	5.0V	5.0 ± 0.03V

ADJUSTMENT

Item	Condition	Measurement			Adjustment			Specifications/Remarks
		Test-equipment	Unit	Terminal	Unit	Parts	Method	
10. Output level check LO1 (CN504)	1) Display f. : 14.000MHz MODE : USB Receive Meaturement condition : 50Ω terminated			CN504			Output level check	–5~+2dBm
LO2A (CN505)				CN505				–1~+6dBm (64.220MHz)
LO3 (CN502)				CN502				–6~+0dBm (8.375MHz)
20MHz (CN503)				CN503				–10~+0dBm (20.0000MHz)
LO4 (CN501)		Oscilloscope		CN501				–10~+0dBm (10.0kHz)
11. 20MHz frequency (Final check)	1) MODE : USB Receive	f. counter		CN510 (TP)	PLL	TC800	Check	20.000MHz ± 20Hz

Receiver Section

Item	Condition	Measurement			Adjustment			Specifications/Remarks
		Test-equipment	Unit	Terminal	Unit	Parts	Method	
1. DSP PLL lock voltage adj.	1) Display f. : 14.000MHz MODE : USB	DC V.M	TX-RX	TP1	TX-RX	L4	3.50V	±0.1V
2. AGC voltage adj.	1) Display f. : 14.000MHz MODE : CW [RF] GAIN : MAX [AGC] : OFF			TP2		VR2	3.00V	±0.1V
3. MCF adj.	1) Display f. : 14.000MHz MODE : USB [AGC] : OFF Spectrum analyzer setting Center f. : 73.050MHz Frequency span : 50kHz ATT : –10dBm VBW, RBW : 1kHz V.REF : 2dB/DIV	Spectrum analyzer Tracking generator	RF	CN16 CN17	RF	L65 L67 L70 L72	Adjust so that gain is max. and band shown at right becomes flat.	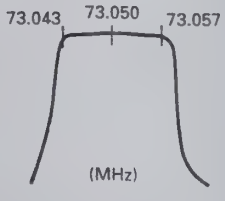
4. BPF adj.	1) Display f. : 7.000MHz MODE : USB [AGC] : OFF [AIP] : OFF Spectrum analyzer setting Center f. : 7.100MHz Frequency span : 2MHz	Spectrum analyser Tracking generator	Rear panel RF	ANT CN15	RF	L28 L29 L30 L31	Waveform is as shown in the figure at the right.	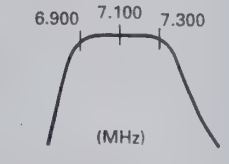
	2) Display f. : 14.000MHz Spectrum analyzer setting Center f. : 14.000MHz Frequency span : 5MHz					L38 L39 L40		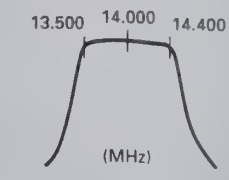
	3) Display f. : 21.000MHz Spectrum analyzer setting Center f. : 21.200MHz Frequency span : 10MHz					L44 L45 L46		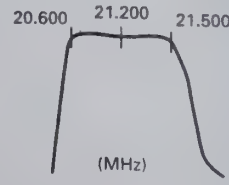

ADJUSTMENT

Item	Condition	Measurement			Adjustment			Specifications/Remarks
		Test-equipment	Unit	Terminal	Unit	Parts	Method	
(28MHz BPF adj.)	1) Display f. : 29.800MHz MODE : USB [AGC] : FAST SSG frequency : 22.101MHz SSG output : –113dBm	SSG AF V.M Oscilloscope DM. SP	Rear panel	ANT EXT. SP	RF	L50 L52	Adjust so that the gain is MAX.	MAX.
5. RX IF AMP adj.	1) Display f. : 14.100MHz MODE : USB [AGC] : OFF [AIP] : OFF AF output : 0.63V/8Ω SSG frequency : 14.101MHz SSG output : –119dBm	SSG AF V.M Oscilloscope DM. SP	Rear panel	ANT EXT. SP	RF Connec-tion	L75 L77 L451 L452 L458	Repeat 2~3 times for MAX AF output reading.	
• Item 6 to 10 below are adjusted in the adjustment mode. To terminate the adjustment menu in the middle, save your settings with Menu No. BA.								
6. Checksum check	1) Menu No. : A0				Front panel	Display	Check	Display : E7b9
7. ALC voltage adj.	1) Menu No. : A1	DC V.M	RF	TP2	Front panel	[RIT/XIT] knob	2.70V	±0.02V
8. S-meter adj.	1) Menu No. : A2 SSG frequency : 14.101MHz SSG output : –110dBm	SSG AF V.M Oscilloscope DM. SP	Rear panel	ANT EXT. SP	TX-RX	VR1	Display : 05	±02
S1	2) Menu No. : A2 SSG output : –107dBm				Front panel	[UP] key	[UP] key : Push once time	Reference display : 12±06
S9	3) Menu No. : A3 SSG output : –81dBm							Reference display : 45±10
Full-scale	4) Menu No. : A4 SSG output : –23dBm							Reference display : 80±20
9. 8.83MHz IF filter adj.	1) Menu No. : A5 SSG1 f. : 1.79980MHz SSG1 output : –60dBm SSG2 f. : 1.80260MHz SSG2 output : –60dBm	SSG1 SSG2 Double signal pad Oscilloscope (10:1 probe)	Rear panel Connec-tion	ANT TP401	Front panel	[RIT/XIT] knob	The waveforms must cross.	OK 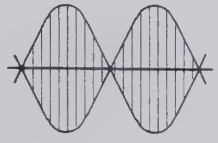
10. 455kHz IF filter adj.	1) Menu No. : A6			TP402				NG 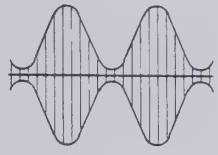
• Writing data : After items 6 to 10 have been adjusted: 1) Menu No. : BA 2) [UP] key : Push once time Display "rEAdy" → "good" (If "nG" is displayed, enter data again.) 3) [CLR] key : Push once time (Adjustment mode terminated)								

ADJUSTMENT

Item	Condition	Measurement			Adjustment			Specifications/Remarks
		Test-equipment	Unit	Terminal	Unit	Parts	Method	
11. ATT check	1) Display f. : 14.100MHz SSG frequency : 14.101MHz SSG output : –107dBm [AGC] : OFF [AIP] : OFF AF output : 1V/8Ω	SSG AF V.M Oscilloscope DM. SP	Rear panel	ANT EXT. SP	Front panel	ATT SW (UP/DOWN)	AF output should be lowered 6dB at time.	AF output ± 3dB
	a. ATT : 0dB						1.0V	ATT display : None
	b. ATT [UP] key : 6dB						0.5V	ATT display : 6
	c. ATT [UP] key : 12dB						0.25V	ATT display : 12
	d. ATT [UP] key : 18dB						0.125V	ATT display : 18
	e. ATT [DOWN] key : 12dB						0.25V	ATT display : 12
	f. ATT [DOWN] key : 6dB						0.5V	ATT display : 6
	g. ATT [DOWN] key : 0dB						1.0V	ATT display : None
12. S/N check	1) Display f. : Indicated below AF VR : 0.63V/8Ω SSG f. : Indicated below However, USB : +1kHz LSB : –1kHz	SSG AF V.M Oscilloscope Distortion meter DM. SP	Rear panel	ANT EXT. SP				Note : If the frequency is 7.5MHz or less, AIP turns ON automatically. Turn AIP OFF with the AIP switch before starting measurement.
	Frequency / MODE / SSG output / SSG MOD / DEV							
	100kHz AM	–87dBm	1kHz	60%			S/N measurement	10dB or more.
	1.500MHz AM	–77dBm	1kHz	60%				
	1.8MHz LSB	–119dBm	OFF	OFF			MAX sensitivity measurement	0.7V/8Ω or more.
	3.5MHz LSB	–119dBm	OFF	OFF				
	5.5MHz LSB	–119dBm	OFF	OFF				
	7.1MHz LSB	–119dBm	OFF	OFF				
	10.1MHz USB	–119dBm	OFF	OFF				
	12.5MHz USB	–119dBm	OFF	OFF				
	14.1MHz USB	–119dBm	OFF	OFF	←		[AIP] : ON	Sensitivity down 5~15dB.
	18.1MHz USB	–119dBm	OFF	OFF				
	21.1MHz USB	–119dBm	OFF	OFF				
	24.8MHz USB	–123dBm	OFF	OFF				
	29.8MHz USB	–123dBm	OFF	OFF				
	29.8MHz FM	–119dBm	1kHz	3kHz	←		SINAD sentitivity measurement	12dB SINAD or more.
13. SSB squelch check	1) Display f. : 14.100MHz MODE : USB [AGC] : OFF SSG frequency : 14.101MHz SSG output : OFF	SSG AF V.M Oscilloscope DM. SP	Rear panel	ANT EXT. SP	Front panel	[SQL] VR	Set to the point noise disappeared.	Knob position 10 : 00~14 : 00
	2) SSG output : –101dBm						Check	Squelch should open.
	3) [SQL] VR : Fully clockwise							Squelch should close.
	4) SSG output : –83dBm							Squelch should open.
14. FM squelch check	1) Display f. : 29.8MHz MODE : FM SSG output : OFF				Front panel	[SQL] VR	Set o the point noise disappeared.	Knob position 8 : 00~12 : 00
	2) SSG output : –119dBm SSG MOD : 1kHz SSG DEV : 3kHz						Check	Squelch should open.
	3) [SQL] VR : Fully clockwise							Squelch should close.
	4) SSG output : –100dBm							Squelch should open.

ADJUSTMENT

Item	Condition	Measurement			Adjustment			Specifications/Remarks
		Test-equipment	Unit	Terminal	Unit	Parts	Method	
15. NB adj.	1) Display f. : 14.100MHz MODE : USB SSG frequency : 14.101MHz SSG output : –90dBm	SSG AF V.M Oscilloscope DM. SP DC V.M	Rear panel RF	ANT EXT. SP TP1	RF	L81 L82	Voltage minimum	
	2) [NB] key : ON [NB] VR : Center	Noise G.	Rear panel	ANT			Adjust output of noise generator to small input (S1) and large input (S9) and check each.	Noise should disappear.
16. S-meter check	1) Display f. : 14.175MHz MODE : USB [AGC] : FAST [RF] GAIN : MAX SSG frequency : 14.176MHz SSG output : –107dBm	SSG AF V.M Oscilloscope DM. SP	Rear panel	ANT EXT. SP	Front panel	Display	S-meter level : S1	–111~–101dBm
	2) SSG output : –83dBm						S-meter level : S9	–89~–77dBm
	3) [NB] key : ON						S-meter level check	Same as when [NB] key off.
17. Auto notch check	1) Display f. : 14.175MHz MODE : USB SSG frequency : 14.1765MHz SSG output : –73dBm [AUTO NOTCH] key : Push (ON)	SSG	Rear panel	ANT	Front panel	Display	S-meter level check	S-meter off.
18. Voice check (equipped on VS-2)	1) [AF] VR : Arbitrary [MENU] key : Push (ON) [M.CH/VFO.CH] knob : Menu No. 48 [UP] key : Step 73 [MENU] key : Push (OFF) [FINE] key : Push (ON)						Check	The displayed frequency can be heard vocally.

Transmitter Section

Item	Condition	Measurement			Adjustment			Specifications/Remarks
		Test-equipment	Unit	Terminal	Unit	Parts	Method	
1. TX MCF adj.	1) Display f. : 14.200MHz MODE : USB Transmit Spectrum analyzer setting TG output : –10dBm Center f. : 8.83MHz Span : 10kHz V.REF : 2dB/DIV	Tracking generator Spectrum analyzer	RF	CN10 TP3	RF	L100	MAX.	
2. TX IF AMP adj.	1) Display f. : 14.200MHz MODE : CW [CAR] VR : Center Disconnect CN4 from the RF unit and connect a 50Ω dummy load. Transmit	50Ω dummy Oscilloscope	RF	CN4	RF Connection	L99,98 L95,94 L92,91 L89 VR3 L457 L456 L455	Repeat 2 or 3 times for MAX.	Reference value 2.5Vp-p or more
	2) After adjustment, set [CAR] VR to MAX for confirmation.							

ADJUSTMENT

Item	Condition	Measurement			Adjustment			Specifications/Remarks
		Test-equipment	Unit	Terminal	Unit	Parts	Method	
3. Final base current	1) Display f. : 14.200MHz MODE : USB [MIC] VR : MIN [CAR] VR : MIN Final unit VR501,502 : MIN Connect ammeter + : External power supply – : Power connector Adjust to minimum current with VR501 and VR502 in the final unit. Transmit	Ammeter			Final	VR501	Current drain (Minimum current) +250mA	First adjust VR501 and VR502 for minimum. Adjust VR501 for an increase of 250mA when switched to TX. Then adjust VR502 for 250mA over this reading.
						VR502	Current drain (Minimum current) + driver current (250mA) + 250mA.	
• Item 4 to 13 below are adjusted in the adjustment mode. To terminate the adjustment menu in the middle, save your settings with Menu No. BA.								
4. ALC adj.	1) Menu No. : A7 Transmit	Power meter	Rear panel	ANT	Front panel	[RIT/XIT] knob	100W	±5.0W
5. NULL adj.	1) Menu No. : A7 Transmit	Power meter DC V.M	Rear panel Filter	ANT CN5	Filter	TC1	MIN.	Reference value 0.5V or less
6. ALC frequency response adj.	1) TX [M.CH] key : Push Display f. : 29.700MHz MODE : CW Transmit	Power meter	Front panel	ANT	Filter	VR1	95W	±5.0W
	2) TX [M.CH] key : Push Menu No. : A7 Transmit						100W power check	100W ± 5W When unable to be set within the range, ALC and frequency response to be adjusted.
7. TX power adj. The power meter on the display is also calibrat--ed at the same time.	1) 50W Menu No. : A8 Transmit After adjustment, [UP] key : Push	Power meter	Rear panel	ANT	Front panel	[RIT/XIT] knob	50W	±3.0W
	2) 25W Menu No. : A9 Transmit After adjustment, [UP] key : Push						25W	±2.0W
	3) 10W Menu No. : AA Transmit After adjustment, [UP] key : Push						11W	±2.0W
8. TX gain adj.	1) 1.9MHz band Menu No. : AB Transmit	Power meter	Rear panel	ANT	Front panel	[UP] key	Press the [UP] key after the beep sounds for two or three seconds.	
	2) 3.5MHz band Menu No. : AC Transmit							
	3) 7.0MHz band Menu No. : AD Transmit							
	4) 10.1MHz band Menu No. : AE Transmit							
	5) 14.1MHz band Menu No. : AF Transmit							

ADJUSTMENT

Item	Condition	Measurement			Adjustment			Specifications/Remarks
		Test-equipment	Unit	Terminal	Unit	Parts	Method	
	6) 18.0MHz band Menu No. : B0 Transmit	Power meter	Rear panel	ANT	Front panel	[UP] key	Press the [UP] key after the beep sounds for two or three seconds.	
	7) 21.0MHz band Menu No. : B1 Transmit							
	8) 24.9MHz band Menu No. : B2 Transmit							
	9) 29.7MHz band Menu No. : B3 Transmit							
9. ALC meter adj.	1) 1 dot Menu No. : B4 Transmit	Power meter	Rear panel	ANT	Front panel	[UP] key	[UP] key : Push	
	2) Zone MAX Menu No. : B5 Transmit							
	3) Full Menu No. : B6 Transmit							
10. SWR protection adj.	1) Nenu No. : B7 Transmit After adjustment, [UP] key : Push	Through type power meter 150Ωdummy	Rear panel	ANT	Front panel	[RIT/XIT] knob	40W	±3.0W
11. SWR meter adj.	1) Menu No. : B8 Transmit					[UP] key	[UP] key : Push	
12. FM DEV adj.	1) Menu No. : B9 AG output : 1kHz/30mV Transmit	Power meter Linear detector AG	Rear panel Front panel	ANT MIC	Front panel	[RIT/XIT] knob	4.6kHz	±0.1kHz
13. FM MIC sense check	1) Menu No. : B9 AG output : 1kHz/3mV **E,X** AG output : 1kHz/5mV **K,P,M**						Check	3.0kHz ± 0.5kHz
• Writing data : After items 4 to 13 have been adjusted: 1) Menu No. : BA 2) [UP] key : Push once time Display "rEAdy" → "good" (If "nG" is displayed, enter data again.) 3) [CLR] key : Push once time (Adjustment mode terminated)								
14. Spurious adj.	1) Display f. : 24.900MHz MODE : CW Transmit	Power meter Spectrum analyzer	Rear panel	ANT	RF	VR2	±1.65MHz spurious level MIN.	–60dB or less
15. Monitor level check	1) Display f. : 21.100MHz MODE : USB [MONI] key : ON [MONI] VR : Center [MIC] VR : Center [AF] VR : MIN AG output : 1kHz/10mV Transmit	Power meter AF V.M Oscilloscope DM. SP AG AF V.M	Rear panel Front panel	ANT EXT. SP MIC	Front panel	Display	Check	0.2V ± 0.05V

ADJUSTMENT

Item	Condition	Measurement			Adjustment			Specifications/Remarks
		Test-equipment	Unit	Terminal	Unit	Parts	Method	
16. Processor check	1) Display f. : 14.200MHz MODE : USB [MIC] VR : Center [PROC] key : ON [METER] : COMP AG output : 1kHz/10mV	Power meter AG AF V.M	Rear panel Front panel	ANT MIC	Front panel	Display	Check	COMP meter : 15~25dB
	2) AG output : 1kHz/1mV							COMP meter : 1dot light
17. Sidetone check	1) Display f. : 14.200MHz MODE : CW [MONI] VR : Center Key down	AF V.M Oscilloscope DM. SP Electronic keyer jig	Rear panel	EXT. SP KEY			Check	0.63V ± 0.3V
18. CW break-in check	1) Display f. : 14.200MHz MODE : CW [VOX] key : ON [FULL/SEMI] key : FULL	Power meter Oscilloscope Electronic keyer jig	Rear panel	ANT KEY			Electronic keyer jig : Key down	Full break-in operation (When the key is turned OFF, the receive mode returns immediately.)
	2) [FULL/SEMI] key : SEMI [DELAY] knob : Center							Semi break-in operation (When the key is turned OFF, the receive mode returns after a while.)
19. DRU check (equipped on DRU-3)	1) Connect a microphone to the MIC jack. MODE : USB/LSB [MIC] VR : Center [REC] key : Push						Hold down the [CH1], and talk into the microphone.	Can be recorded for about 15 seconds.
							Release and press the [CH1] key again.	The recorded voice must be played back.
20. Sub tone check	1) Display f. : 29.100MHz MODE : FM MIC jack : 600Ω terminated [A=B], [TX-B] key : Push [M.IN] key : Push two times [RX-M.CH] : Push Transmit	Power meter Linear detector Oscilloscope f. counter Microphone	Rear panel Front panel	ANT MIC			Check	DEV : ±0.5~1.0kHz Tone f. : 88.2~88.7Hz
21. TX frequency check	1) Display f. : 29.100MHz MODE : CW Transmit							29.100.000MHz ± 145Hz
22. TX frequency characteristic check	1) Display f. : 14.200MHz MODE : USB/LSB MIC jack : Connect to AG AG output : 1kHz/5mV 400Hz/5mV 2.6kHz/5mV Transmit	Power meter Oscilloscope AG AF V.M	Rear panel Front panel	ANT MIC			a. Set AG to 1.0kHz and turn the [MIC] VR to set to 100W. b. Change the AG frequency and measure the difference between the power levels at 1.0kHz and at another frequency c. Take a measurement for each USB and LSB.	Within 6dB

ADJUSTMENT

Item	Condition	Measurement			Adjustment			Specifications/Remarks
		Test-equipment	Unit	Terminal	Unit	Parts	Method	
23. Processor check	1) Display f. : 14.200MHz MODE : USB [PROC] key : ON [METER] key : Push [PROC] VR : MIN MIC jack : Connect to AG AG output : 1.0kHz/1mV Transmit						Change [PROC] VR so that the first segment on the COMP meter lights.	
	2) AG output : 1.0kHz /10mV (20dB UP) Transmit						Check	COMP meter : within 15~25dB
24. AT	1) Display f. : Indicated below MODE : CW [METER] : SWR [THRU/AUTO] : AUTO Transmit After checked retuen to receive mode.	Through type power meter 150Ωdummy	Rear panel	ANT	Front panel	Display	Check	ON AIR LED light. AT TUNE LED light. When tuning completed, LEDs off.
	2) [AT TUNE] key : ON	Frequency 1.910MHz 3.500 3.700 7.000 10.100 14.000 18.100 21.000 24.900 29.700			AT	TC1	Note : When 29.700MHz and SWR 1.0 to 1.3, variiable capacitor has flutters so that it does not stop, adjust the TC1 at which SWR 1.2 or less is acceptable.	Begins AT tuning after entering the transmission state. This should stop within roughly 6 seconds. SWR : 1.2 or less Power : 70W or more

Adjustment Points

■ **Side view**

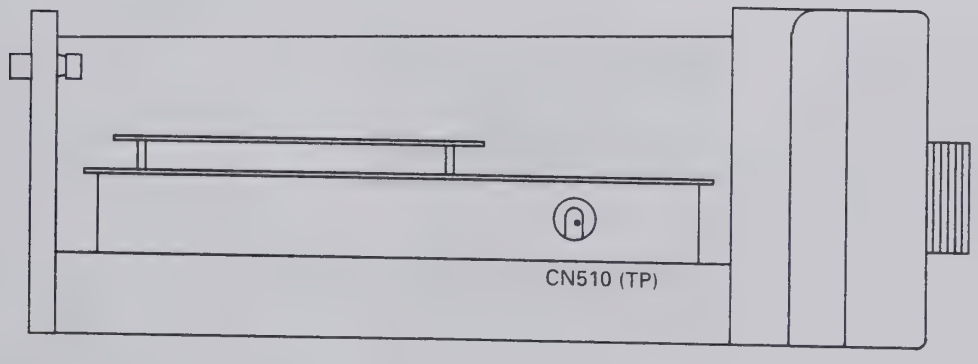

ADJUSTMENT

■ **Upper view**

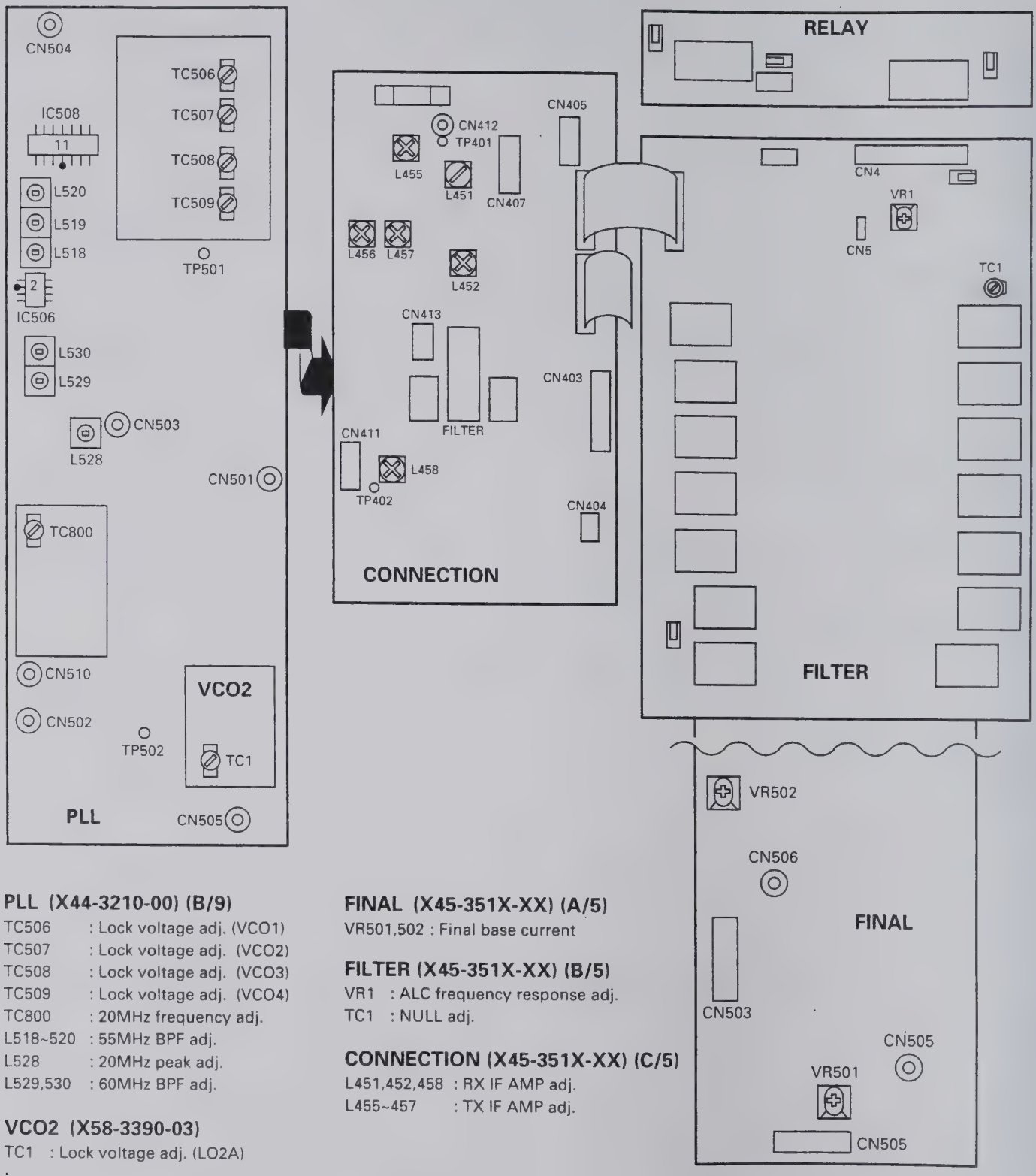

PLL (X44-3210-00) (B/9)

TC506 : Lock voltage adj. (VCO1)
TC507 : Lock voltage adj. (VCO2)
TC508 : Lock voltage adj. (VCO3)
TC509 : Lock voltage adj. (VCO4)
TC800 : 20MHz frequency adj.
L518~520 : 55MHz BPF adj.
L528 : 20MHz peak adj.
L529,530 : 60MHz BPF adj.

VCO2 (X58-3390-03)

TC1 : Lock voltage adj. (LO2A)

FINAL (X45-351X-XX) (A/5)

VR501,502 : Final base current

FILTER (X45-351X-XX) (B/5)

VR1 : ALC frequency response adj.
TC1 : NULL adj.

CONNECTION (X45-351X-XX) (C/5)

L451,452,458 : RX IF AMP adj.
L455~457 : TX IF AMP adj.

ADJUSTMENT

■ **Lower view**

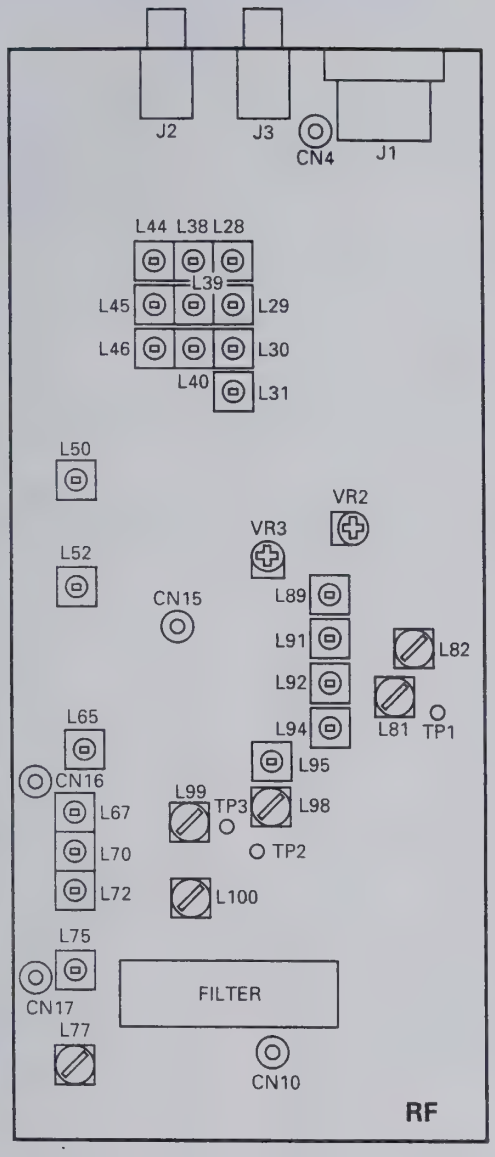

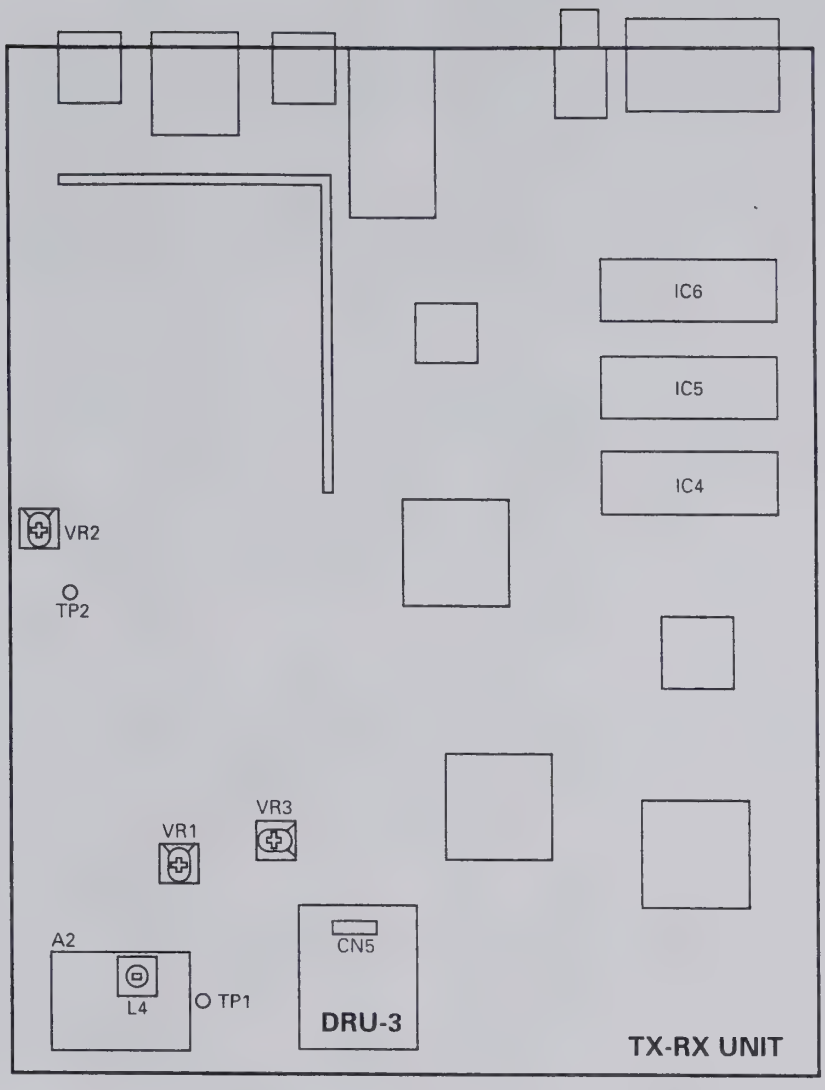

RF (X44-3210-00) (A/9)

VR2	: Spurious adj.
VR3,L89,91,92,94,95,98,99	: TX IF AMP adj.
L28~31,38~40,44~46,50,52	: BPF adj.
L65,67,70,72	: MCF adj.
L75,77	: RX IF AMP adj.
L81,82	: NB adj.
L100	: TX MCF adj.

TX-RX UNIT (X57-4620-00)

VR1 : S-meter adj.
VR2 : AGC voltage adj.
VR3 : DRU-3 recording level adj. (Adjusted to the mechanical center)
L4 : DSP PLL lock voltage adj.

TERMINAL FUNCTION

CN No.	Pin No.	Name	Function
RF UNIT (X44-3210-00) (A/9) : RF			
CN2	Coaxial	RAT	RX signal
CN4	Coaxial	DRV	TX drive signal
CN5	Coaxial	LO1	1st local oscillation 73.08~103.05MHz
CN6	Coaxial	LO2A	2nd local oscillation 64.22MHz
CN7	1	TXB	TX 8V
	2	RXB	RX 8V
	3	AGC	AGC voltage
CN10	Coaxial	TR88	RX IF output/TX IF input 8.83MHz
CN13	1	SPO	Speaker signal
	2	CKY	Keying signal
	3	AGC	AGC voltage
	4	TXC	TX : "H"
	5	RXC	RX : "H"
	6	8A	Analog 8V
	7	14S	14V-switched
	8	GND	GND
CN14	1	15K	Filter selection 15kHz
	2	3K	Filter selection 3kHz
	3	6K	Filter selection 6kHz
	4	VSF	Forward wave detection voltage
	5	VSF	Reflected wave detection voltage
	6	ALM	ALC meter output
	7	THP	Thermal protection
	8	NC	
	9	UCK2	RF serial/parallel convert clock
	10	UDA2	RF serial/parallel convert data
	11	ENR1	RF serial/parallel convertor IC1 enable
	12	ENR2	RF serial/parallel convertor IC2 enable
	13	ENR3	DAC enable
	14	NC	
	15	RBK	RF blank signal
	16	–6	–6V
	17	GND	GND
	18	NC	
	19	SS	TX/RX control signal TX : "L"
	20	NC	
J1	1	SPO	Speaker signal
	2	COM	Relay common terminal
	3	SS	TX/RX control signal
	4	MKE	TX relay close
	5	BRK	TX relay open
	6	ALC	ALC input
	7	RL	13V output when TX
J2		EXT RX	External receiver output
J3		IF OUT	SM-230
RF UNIT (X44-3210-00) (B/9) : PLL			
CN500	1	GND	GND
	2	NFMT	FM modulation on/off signal (FM TX : "L")
	3	VB3	21.489~30MHz } VCO select signal Active "H"
	4	VB2	14.489~21.489MHz
	5	VB1	7.489~14.489MHz
	6	VB0	0~7.489MHz
	7	UNL	Unlock detection output (Unlock : "H")
	8	GND	GND
	9	PLE2	PLL2 enable signal (LO2A)
	10	PLE1	PLL1 enable signal (LO1)
	11	PCK	Clock
	12	PDA	PLL, DDS data
	13	14D	14V
	14	DLE3	DDS3 enable signal (LO4)
	15	DLE2	DDS2 enable signal (LO3)
	16	DLE1	DDS1 enable signal (LO1)
	17	TXC	PLL DDS latch select signal (TX : "H")
	18	GND	GND
	19	9P	9V
	20	5P	5V
CN501	1	GND	GND
	2	LO4	DDS3 output
CN502	Coaxial	LO3	DDS2 output (8.375MHz)
CN503	Coaxial	REF	Reference signal output for TX-RX unit (20MHz)
CN504	Coaxial	LO1	LO1 output (73.08~103.05MHz)
CN505	Coaxial	LO2A	LO2A output (64.22MHz)
CN506	1	FMD	FM modulation signal
	2	GND	GND
	3	GND	GND
RF UNIT (X44-3210-00) (D/9) : PHONE			
CN901	1	SPI1	Phone jack through
	2	SPG	GND
	3	SPO1	Phone jack output
RF UNIT (X44-3210-00) (E, F, G, H, I/9) : VR			
CN903	1	DGND	Digital GND
	2	VPWR	MIC/PWR VR 1
	3	VMIC	MIC/PWR VR 2
	4	VDLY	CAR/DELAY VR 1
	5	VCAR	CAR/DELAY VR 2
	6	5D	5V
CN904	1	DGND	Digital GND
	2	VMON	PROC/MONI VR 1
	3	VPRC	PROC/MONI VR 2
	4	VKEY	AGC/KEY VR 1
	5	VAGC	AGC/KEY VR 2
	6	5D	5V
CN905	1	NC	
	2	WENB	Width encoder B
	3	WENA	Width encoder A
	4	SENB	Shift encoder B
	5	SENA	Shift encoder A
	6	GND	GND
CN906	1	GND	GND
	2	VRF	AF/RF VR 1
	3	VAF	AF/RF VR 2
	4	RENA	RIT encoder A
	5	RENB	RIT encoder B
	6	5D	5V
CN907	1	GND	GND
	2	VSQL	NB/SQL VR 1
	3	VNB	NB/SQL VR 2
	4	CENA	M.CH encoder A
	5	CENB	M.CH encoder B
	6	5D	5V
FINAL UNIT (X45-351X-XX) (A/5) : FINAL			
CN501	Coaxial	DRV	Drive input (From RF)
CN502	Coaxial	PO	TX signal output (To FILTER)
CN503	1	14S	13.8V
	2	14S	13.8V
	3	TXB	TX 13.8V
	4	GND	GND
	5	GND	GND
CN504	1	14V	13.8V
	2	14V	13.8V
	3	GND	GND

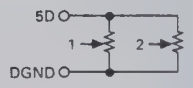

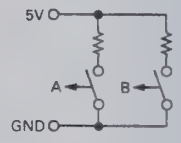

TERMINAL FUNCTION

CN No.	Pin No.	Name	Function
W501	Board	14F	Power supply 13.8V connecting harness
	in	14F	Power supply 13.8V connecting harness
		GND	Power supply 13.8V connecting harness
		GND	Power supply 13.8V connect ing harness
FIANL UNIT (X45-351X-XX) (B/5) : FILTER			
CN1	Coaxial	PO	Filter input signal
CN2	Coaxial	ATO	TX output signal (To AT)
CN3	1	8A	8V
	2	GND	GND
	3	GND	GND
	4	14S	14V
	5	14S	14V
	6	UCK2	Shift register clock
	7	UDA2	Shift register data
	8	ENF1	Shift register enable
	9	DGND	Digital GND
	10	TXB	TX power 8V
	11	VSF	Forward wave detection voltage
	12	VSR	Reflected wave detection voltage
CN4	1	ATA	Make for AT through/on relay
	2	28AT	24.5~30MHz
	3	25AT	21.5~24.5MHz
	4	18AT	18.5~21.5MHz
	5	14AT	14.5~18.5MHz
	6	10AT	10.5~14.5MHz
	7	7AT	4.0~7.5MHz
	8	4AT	2.5~4.0MHz
	9	GND	GND
	10	14S	14V
	11	GND	GND
W1	1	RL	TX/RX select signal output
	2	ANTS	ANT 1/2 select signal output
	3	GND	GND
FINAL UNIT (X45-351X-XX) (C/5) : CONNECTION			
CN401	1	15K	455kHz filter select "L" : Filter on
	2	3K	455kHz filter select "L" : Filter on
	3	6K	455kHz filter select "L" : Filter on
	4	TT	External AT tuning control (Pass through)
	5	TS	External AT tuning control (Pass through)
	6	UCK2	Pass through
	7	UDA2	Pass through
	8	ENF1	Pass through
	9	VSF	Pass through
	10	VSR	Pass through
	11	THP	Pass through
	12	14D	14V
	13	14D	14V
	14	14V	14V
	15	14V	14V
	16	PWS	Power switch on : "H"
	17	9P	PLL power 9V
	18	5P	PLL power 5V
	19	–6	–6V output
	20	GND	GND
CN402	1	8A	8V
	2	GND	GND
	3	GND	GND
	4	14S	13.8V
	5	14S	13.8V
	6	UCK2	Pass through
	7	UDA2	Pass through
	8	ENF1	Pass through
	9	DGND	Digital GND
	10	TXB	TX power 8V
	11	VSF	Pass through
	12	VSR	Pass through
CN403	1	14A	13.8V
	2	14S	13.8V
	3	8D	Digital 8V
	4	8A	Analog 8V
	5	APG	GND
	6	SPO3	Speaker output signal input
	7	SPG	Speaker GND
CN404	1	SPG	Speaker GND
	2	SP	Speaker output signal
CN405	1	14S	13.8V
	2	14S	13.8V
	3	AGND	Analog GND
	4	AGND	Analog GND
CN406	1	THP	Pass through
	2	TXB	Pass through
	3	14D	13.8V
	4	8D	Digital 8V
	5	14D	13.8V
	6	8A	Analog 8V
	7	GND	GND
	8	GND	GND
	9	14S	13.8V
	10	14S	13.8V
	11	14S	13.8V
	12	PSW	Power switch on : "H"
	13	14V	13.8V
CN407	1	14S	13.8V
	2	AGND	Analog GND
	3	TT	Pass through
	4	TS	Pass through
	5	GND	GND
CN410	Coaxial	LO3	Local LO3 8.375MHz (From PLL)
CN411	1	TIF	TX IF input
	2	GND	GND
	3	RIF	RX IF output
	4	GND	GND
CN412	Coaxial	TR88	8.83MHz
CN413	1	TXB	TX power 8V
	2	RXB	RX power 8V
	3	AGC	AGC line
FINAL UNIT (X45-351X-XX) (D/5) : AVR			
CN601	1	14V	13.8V
	2	14V	13.8V
	3	GND	GND
CN602	1	14S	13.8V
	2	14S	13.8V
	3	AGND	Analog GND
	4	AGND	Analog GND
CN603	1	THP	Thermal protection on : "H"
	2	TXB	TX 13.8V
	3	14D	13.8V
	4	8D	Digital 8V
	5	14D	Digital 13.8V
	6	8A	Analog 8V
	7	GND	GND
	8	GND	GND
	9	14S	13.8V
	10	14S	13.8V

AT coil tap band data

TERMINAL FUNCTION

CN No.	Pin No.	Name	Function
	11	14S	13.8V
	12	PSW	Power switch on : "H"
	13	14V	13.8V
CN604	1	14S	13.8V
	2	14S	13.8V
	3	TXB	TX 13.8V
	4	GND	GND
	5	GND	GND
CN605	1	MOT+	Moter drive +
	2	MOT –	Motor drive –
FINAL UNIT (X45-351X-XX) (E/5) : RELAY			
CN301	1	RL	TX/RX select signal input
	2	ANTS	ANT 1/2 select signal input
	3	GND	GND
CN302	Coaxial	ATO	TX signal input (From FILTER)
CN303	Coaxial	RAT	RX signal output (To RF)
CN304	Coaxial	AT1	Input/output to AT (RX : Output, TX : Input)
CN305	Coaxial	AT2	Input/output to AT (RX : Input, TX : Output)
CN306	TP		ANT1 GND
CN307	TP		ANT2 GND
W301	TP		ANT1 signal line
W303	TP		ANT2 signal line
AT UNIT (X53-3340-02)			
CN1	Coaxial	AT1	AT input
CN2	Coaxial	AT2	AT output
CN3	1	VRE	+5V reference voltage for A/D
	2	POD2	VC2 position detection, VR101 output
	3	GND	GND
	4	POD1	VC1 position detection, VR102 output
CN4	1	NC	
	2	M2–	Motor 2 drive –
	3	M2+	Motor 2 drive +
	4	M1–	Motor 1 drive –
	5	M1+	Motor 1 drive +
CN5	1	NC	
	2	F15	Power line 11~14V
	3	GND	GND
CN6	1	ATA	Make for AT through/on relay "L" : On
	2	NC	
CN7	1	ATG	GND for discriminating that is connected to microcomputer
	2	SPED	Motor speed control pulse
	3	APRE	Control selection "H" : Preset type, "L" : Auto tuning type
	4	VRE	+5V reference voltage for A/D
	5	PR22	Motor 2 control signal
	6	PR21	Motor 2 control signal
	7	POD2	VC2 position detection
	8	PR12	Motor 1 control signal
	9	PR11	Motor 1 control signal
	10	POD1	VC1 position detection
	11	GND	GND
CN101	1	28AT	24.5~30MHz
	2	15AT	21.5~24.5MHz
	3	NC	
	4	18AT	18.5~21.5MHz
	5	14AT	14.5~18.5MHz
	6	10AT	10.5~14.5MHz
	7	7AT	4.0~7.5MHz
	8	4AT	2.5~4.0MHz

AT coil tap band data

CN No.	Pin No.	Name	Function
	9	GND	GND
CONTROL UNIT (X53-356X-XX) (A/4) : CONTROL			
CN1	1	GND	GND
	2	NFMT	Not FM TX signal
	3	VB3	VCO selest signal
	4	VB2	VCO select signal
	5	VB1	VCO select signal
	6	VB0	VCO select signal
	7	UNL	PLL unlock signal
	8	GND	GND
	9	PLE2	PLL2 enable signal
	10	PLE1	PLL1 enable signal
	11	PCK	PLL serial clock
	12	PDA	PLL serial data
	13	14D	Digital 13.8V
	14	DLE3	DDS3 enable signal
	15	DLE2	DDS2 enable signal
	16	DLE1	DDS1 enable signal
	17	TXC	TX control signal
	18	GND	GND
	19	9P	PLL power 9V (Pass through)
	20	5P	PLL power 5V (Pass through)
CN2	1	GND	GND
	2	–6	–6V (Pass through)
	3	5P	PLL power 5V (Pass through)
	4	9P	PLL power 9V (Pass through)
	5	PSW	Power control signal
	6	14V	13.8V
	7	14V	13.8V
	8	14D	Digital 13.8V
	9	14D	Digital 13.8V
	10	THP	Thermal protection
	11	VSR	Reflected wave analog voltage
	12	VSF	Forward wave analog voltage
	13	ENF1	Enable for IC1 on FILTER board
	14	UDA2	Serial data for IC1 on FILTER board
	15	UCK2	Serial clock for IC1 on FILTER board
	16	TS	AT-300 control signal
	17	TT	AT-300 control signal
	18	6K	6kHz filter select signal
	19	3K	3kHz filter select signal
	20	15K	15kHz filter select signal
CN3	1	5D	Digital 5V
	2	MENA	Main encoder pulse A
	3	MENB	Main encoder pulse B
	4	DGND	Digital GND
CN4	1	NC	
	2	NC	
	3	SPED	Internal AT speed control signal
	4	APRE	Internal AT control select signal
	5	VRE	Reference voltage for A/D convertor
	6	PR22	Motor 2 control signal
	7	PR21	Motor 2 control signal
	8	POD2	Motor 2 position voltage
	9	PR12	Motor 1 control signal
	10	PR11	Motor 1 control signal
	11	POD1	Motor 1 position voltage
	12	GND	GND
CN5	1	GND	GND
	2	CTS	Communication inhibit signal from TS-870S
	3	RTS	Communication inhibit signal from personal computer
	4	RXD	TX data from TS-870S
	5	TXD	RX data from personal computer

TERMINAL FUNCTION

CN No.	Pin No.	Name	Function
	6	KEYS	Key jack sensing signal
	7	DASH	Electronic keyer dash signal
	8	DOT	Electronic keyer dot signal
	9	GND	GND
	10	H0	DSP control data bus
	11	H1	DSP control data bus
	12	H2	DSP control data bus
	13	H3	DSP control data bus
	14	H4	DSP control data bus
	15	H5	DSP control data bus
	16	H6	DSP control data bus
	17	H7	DSP control data bus
	18	HENA	DSP A enable signal
	19	HENB	DSP B enable signal
	20	HRW	DSP read/write control signal
CN6	1	GND	GND
	2	HA0	DSP control address bus
	3	HA1	DSP control address bus
	4	HA2	DSP control address bus
	5	GND	GND
	6	BEEP	Beep control signal
	7	MD	Microphone down signal
	8	MU	Microphone up signal
	9	SS	Standby switch
	10	GND	GND
	11	KEY	Key down signal
	12	DRST	DSP reset signal
	13	CKY	TX wave control signal
	14	RXC	RX control signal
	15	TXC	TX control signal
	16	AMUT	AF mute signal
	17	VCEN	TX-RX unit IC26 enable
	18	UCK2	TX-RX unit serial clock
	19	UDA2	TX-RX unit serial data
	20	DREN	DRU-3 control enable signal
	21	PLUL	TX-RX unit PLL unlock signal
	22	PLEN	TX-RX unit PLL control enable signal
	23	EOM	DRU-3 end of message
	24	VBSY	VS-2 busy signal
	25	STR	VS-2 synthesize control signal
	26	GND	GND
CN7	1	5D	Digital 5V
	2	VAGC	AGC VR analog voltage
	3	VKEY	KEY VR analog voltage
	4	VPRC	PROC VR analog voltage
	5	VMON	MONI VR analog voltage
	6	DGND	Digital GND
	7	NC	
	8	5D	Digital 5V
	9	VCAR	CAR VR analog voltage
	10	VDLY	DELAY VR analog voltage
	11	VMIC	MIC VR analog voltage
	12	VPWR	PWR VR analog voltage
	13	DGND	Digital GND
CN8	1	5D	Digital 5V
	2	14D	Digital 13.8V
	3	14D	Digital 13.8V
	4	ENL2	LCD driver control enable signal
	5	ENL3	LCD driver control enable signal
	6	UDA1	LCD driver control serial data
	7	UCK1	LCD driver control serial clock
	8	BLANK	LCD goes off control signal
	9	DIM	LCD dimmer control signal
	10	GND	GND

CN No.	Pin No.	Name	Function
CN9	1	BLNK	LED goes off control signal
	2	K0	Key input 0
	3	K1	Key input 1
	4	K2	Key input 2
	5	K3	Key input 3
	6	K4	Key input 4
	7	K5	Key input 5
	8	K6	key input 6
	9	K7	Key input 7
	10	PSW	Power switch input signal
	11	ENL4	Enable for IC501 on SW board
	12	ENL1	Enable for IC502~504 on SW board
	13	UDA1	Serial data for SW board
	14	UCK1	Serial clock for SW board
	15	LATC	AT tune LED control signal
	16	TXC	TX control signal (TX LED control)
	17	RES	IC501~504 reset signal
	18	5V	5V
	19	5D	Digital 5V
	20	DGND	Digital GND
CN10	1	NC	
	2	WENB	Width encoder pulse B
	3	WEBA	Width encoder pulse A
	4	SENB	Shift encoder pulse B
	5	SENA	Shift encoder pulse A
	6	GND	GND
	7	NC	
	8	5D	Digital 5V
	9	RENB	RIT encoder pulse B
	10	RENA	RIT encoder pulse A
	11	VAF	AF VR analog voltage
	12	VRF	RF VR analog voltage
	13	GND	GND
	14	NC	
	15	5D	Digital 5V
	16	CENB	Click encoder pulse B
	17	CENA	Click encoder pulse A
	18	VNB	NB VR analog voltage
	19	VSQL	SQL VR analog voltage
	20	GND	GND
CN11	1	NC	
	2	SS	Standby switch
	3	NC	
	4	GND	GND
	5	–6	–6V
	6	RBK	RF mute signal
	7	NC	
	8	ENR3	Enable for IC7 on RF board
	9	ENR2	Enable for IC2 on RF board
	10	ENR1	Enable for.IC1 on RF board
	11	UDA2	Serial data for RF board
	12	UCK2	Serial clock for RF board
	13	NC	
	14	THP	Thermal protection
	15	ALM	ALC meter analog voltage
	16	VSR	Reflected wave analog voltage
	17	VSF	Forward wave analog voltage
	18	6K	6kHz filter select signal
	19	3K	3kHz filter select signal
	20	15K	15kHz filter select signal
CONTROL UNIT (X53-356X-XX) (B/4) : SW			
CN501	1	DGND	Digital GND
	2	5D	Digital 5V

TERMINAL FUNCTION

CN No.	Pin No.	Name	Function
	3	5V	5V
	4	RES	IC501~504 reset signal
	5	TXC	TX control signal (TX LED control)
	6	LATC	AT tune LED control signal
	7	UCK1	Serial clock
	8	UDA1	Serial data
	9	ENL1	IC502~504 enable
	10	ENL4	IC501 enalbe
	11	PSW	Power switch output signal
	12	K7	Key output 7
	13	K6	Key output 6
	14	K5	Key output 5
	15	K4	Key output 4
	16	K3	Key output 3
	17	K2	Key output 2
	18	K1	Key output 1
	19	K0	Key output 0
	20	BLNK	LED goes off control signal
CONTROL UNIT (X53-356X-XX) (D/4) : MIC			
CN902	1	SS	Standby switch
	2	MD	Microphone down signal
	3	MU	Microphone up signal
	4	8M	8V for microphone
	5	MCG	GND
	6	MSG	MIC GND
	7	MIC	Microphone signal output
TX-RX UNIT (X57-4620-00)			
CN1	1	TIF	TX IF output (455kHz)
	2	GND	TIF GND
	3	RIF	RX IF input (455kHz)
	4	GND	RIF GND
CN3	1	LO4	Local 4 input (466kHz)
	2	GND	LO4 GND
	3	FMD	FM modulation output (To PLL)
	4	GND	FMD GND
CN4	1	MIC	Microphone signal input
	2	MSG	MIC GND
	3	MCG	GND
	4	SS	Microphone standby switch
	5	MU	Microphone up
	6	MD	Microphone down
	7	8M	8V for microphone
CN5	1	GND	GND
	2	DRMG	MIC GND
	3	DRM	Microphone signal output
	4	DRO	DRU-3 playback signal input
	5	5D	Digital 5V for DRU-3
	6	GND	GND
	7	EOM	End of message (End : "H")
	8	OVF	Over flow signal (Over flow : "L")
	9	DREN	DRU-3 enable
	10	SD	DRU-3 serial data
	11	SCK	DRU-3 clock
CN6	1	VO	Audio signal
	2	GND	GND
	3	SD	VS-2 control data
	4	SCK	VS-2 control data clock
	5	BSY	VS-2 busy
	6	STR	VS-2 synthesize control
	7	5C	5V for VS-2
	8	GND	GND
CN7	1	GND	GND

CN No.	Pin No.	Name	Function
	2	HA0	DSP data address
	3	HA1	DSP data address
	4	HA2	DSP data address
	5	GND	GND
	6	BEEP	Beep control signal
	7	MD	Microphone down signal
	8	MU	Microphone up signal
	9	SS	Standby switch
	10	GND	GND
	11	KEY	Key down signal
	12	DRST	DSP reset signal
	13	CKY	TX wave control signal
	14	RXC	RX control signal
	15	TXC	TX control signal
	16	AMUT	AF mute signal
	17	VCEN	IC26 enable
	18	UCK2	Serial clock for TX-RX unit
	19	UDA2	Serial data for TX-RX unit
	20	DREN	DRU-3 enable
	21	PLUL	TX-RX unit PLL unlock signal output
	22	PLEN	TX-RX unit PLL enable
	23	EOM	DRU-3 end of message signal output
	24	VBSY	VS-2 busy signal
	25	STR	VS-2 synthesize control signal
	26	GND	GND
CN8	1	GND	GND
	2	CTS	TX inhibit signal from TS-870S
	3	RTS	TX inhibit signal from personal computer
	4	RXD	TX data from TS-870S
	5	TXD	RX data from personal computer
	6	KEYS	Key jack sensing signal
	7	DASH	Electronic keyer dash signal
	8	DOT	Electronic keyer dot signal
	9	GND	GND
	10	H0	DSP data bus
	11	H1	DSP data bus
	12	H2	DSP data bus
	13	H3	DSP data bus
	14	H4	DSP data bus
	15	H5	DSP data bus
	16	H6	DSP data bus
	17	H7	DSP data bus
	18	HENA	DSP A enable signal
	19	HENB	DSP B enable signal
	20	HRW	DSP read/write control signal
CN9	1	14A	Analog 13.8V
	2	8D	Digital 8V
	3	14S	13.8V
	4	8A	Analog 8V
	5	APG	GND
CN10	1	SPI1	AF input when headphone through
	2	SPG	GND
	3	SPO1	Headphone AF output
CN11	1	GND	GND
	2	14S	13.8V
	3	8A	Analog 8V
	4	RXC	RX : "L"
	5	TXC	TX : "H"
	6	AGC	AGC voltage
	7	CKY	Keying signal
	8	SPO1	Speaker signal output
CN12	1	SPO3	Internal speaker AF output
	2	SPG	GND

TERMINAL FUNCTION

CN No.	Pin No.	Name	Function
CN13	Coaxial	REF	20MHz reference signal for PLL, DPS (From PLL)
J1	1	GND	GND
EXT.SP	2	NC	
	3	NC	
	4		External speaker signal output
	5		Signal input when external speaker not connected
J2	1	GND	GND
Paddle	2	NC	
	3	NC	
	4	NC	
	5	DASH	Electronic keyer dash signal
	6	DOT	Electronic keyer dot signal
	7	NC	
	8	NC	
	9	NC	
	10	KEYS	Key switch signal
	11	KEYS	Open when using paddle
J4	1		GND
RTTY	2		RTTY signal
	3		GND
	4		RTTY signal
J5	1	NC	
ACC2	2	NC	
	3	ANO	RX audio output
	4	GND	ANO GND
	5	PSQ	Squelch open : GND, Squelch close : open
	6	SMET	S-meter voltage output
	7	NC	
	8	GND	GND
	9	PKS	Standby switch when using PKD input (Front panel microphone input is muted)
	10	NC	
	11	PKD	TX input
	12	GND	PKD GND
	13	SS	Standby switch

CN No.	Pin No.	Name	Function
J6	1	GND	GND
KEY	2	GND	GND
	3	KEYS	Key jack sensing signal
	4	NC	
	5	KEY	Key down signal
J7	1	GND	GND
COM	2	NC	
	3	TXD	RX data from personal computer
	4	RXD	TX data from TS-870S
	5	NC	
	6	NC	
	7	CTS	TX inhibit signal from TS-870S
	8	RTS	TX inhibit signal from personal computer
	9	NC	
LCD ASSY (B38-0736-05)			
CN1	1	GND	GND
	2	DIM	LCD dimmer control signal
	3	BLANK	LCD goes off control signal
	4	UCK1	LCD driver control serial clock
	5	UDA1	LCD driver control serial data
	6	ENL3	LCD driver control enable signal
	7	ENL2	LCD driver control enable signal
	8	14D	Digital 13.8V
	9	14D	Digital 13.8V
	10	5D	Digital 5V

TS-870S PC BOARD VIEWS

LCD ASSY (B38-0736-05)
Component side view

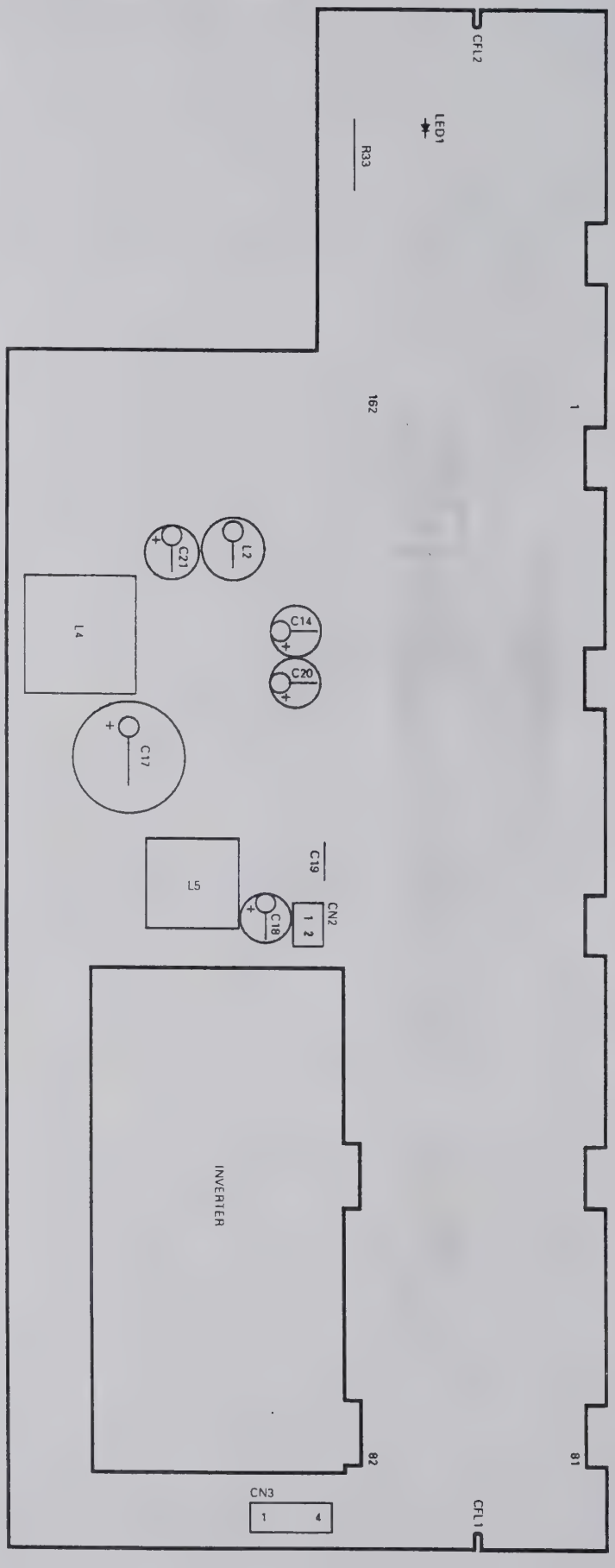

LCD ASSY (B38-0736-05)
Foil side view

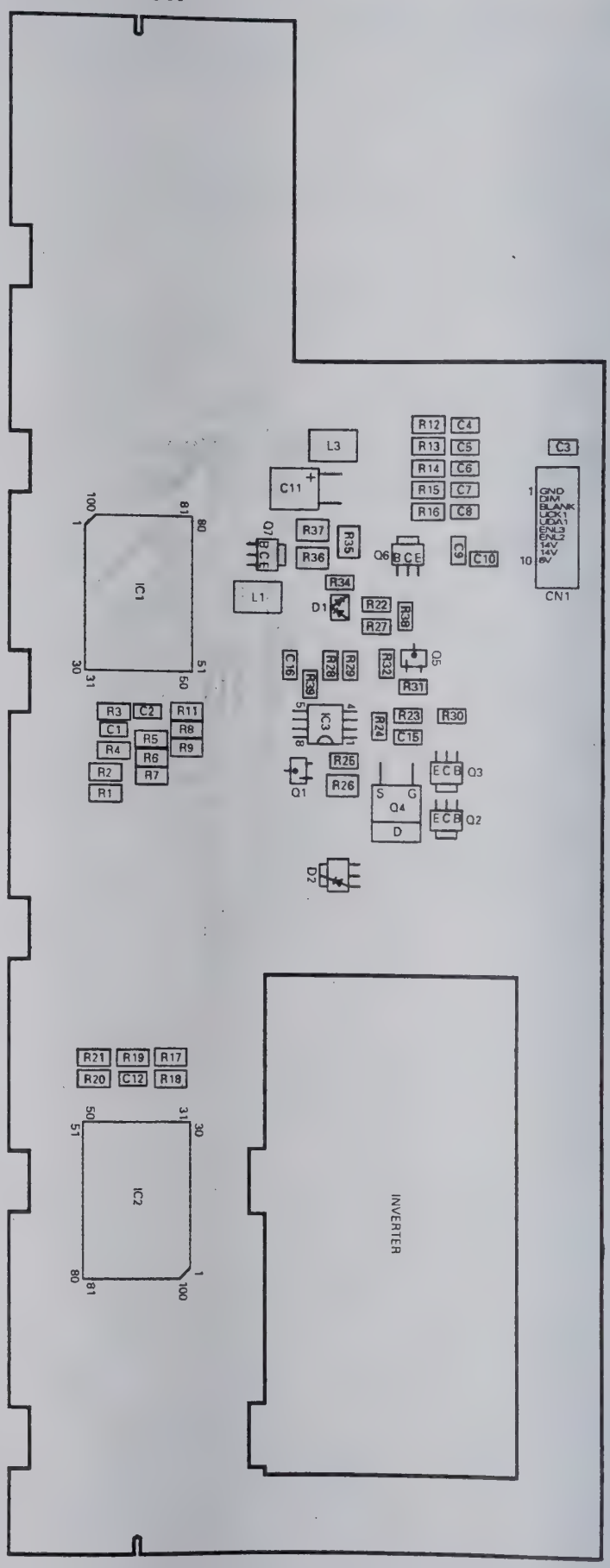

RF UNIT (X44-3210-00) (C/9)
Component side view

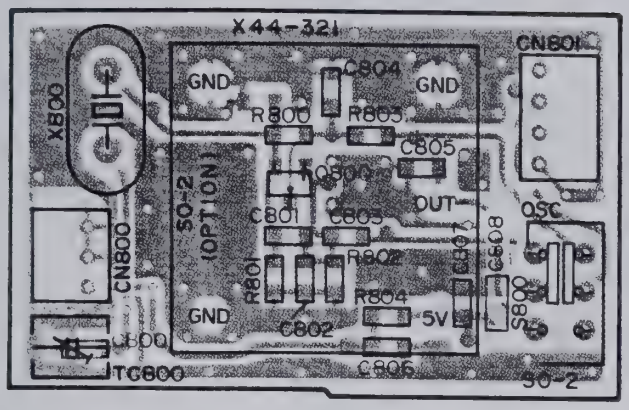

RF UNIT (X44-3210-00) (C/9)
Foil side view

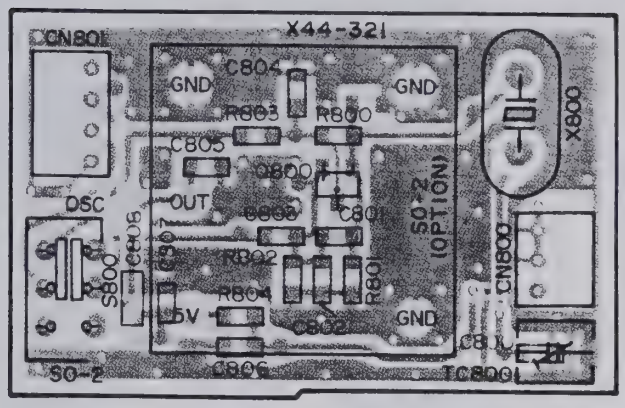

Component side
Foil side

VCO2 (X58-3390-03)
Component side view

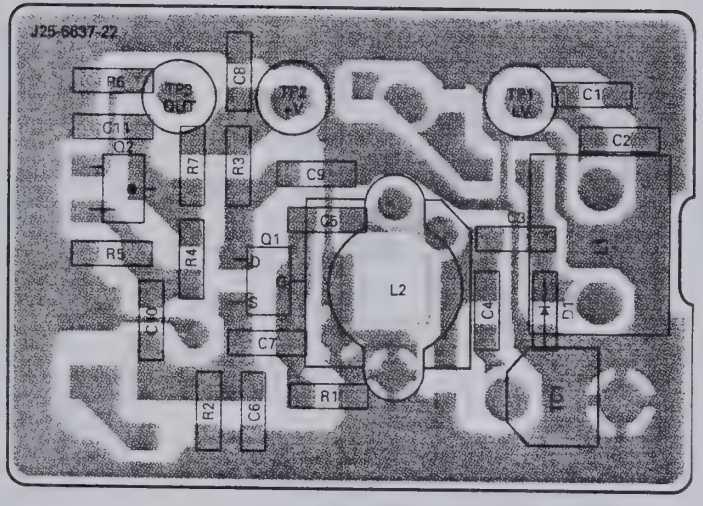

VCO2 (X58-3390-03)
Foil side view

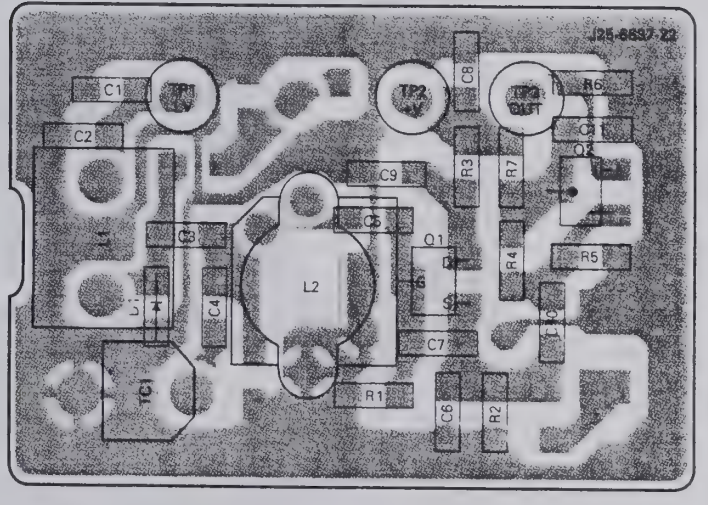

FINAL UNIT (X45-351X-XX) (A/5) : FINAL

Component side view

0-00 : K,P,M,M2,X
2-71 : E,E2,E3,E9

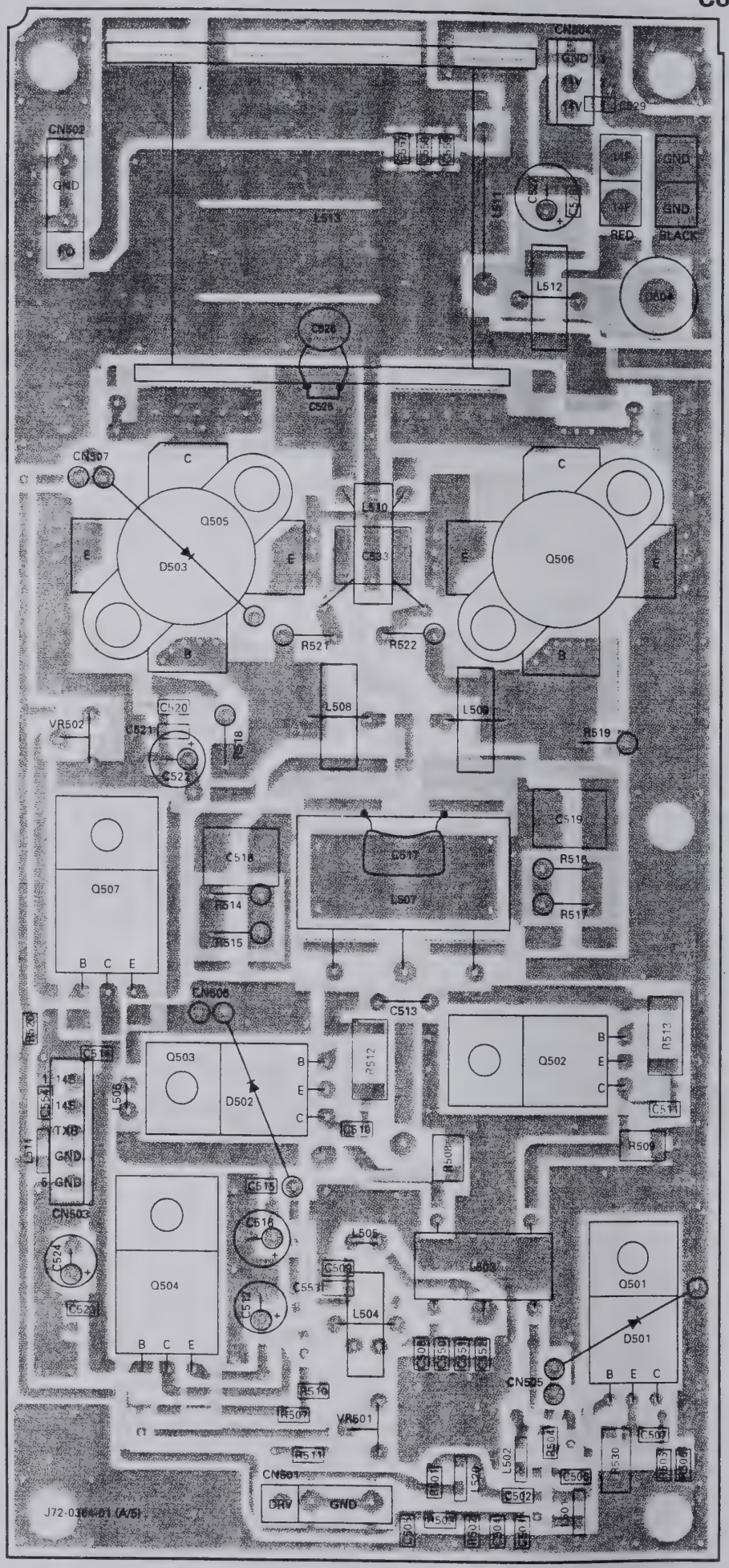

Component side
Foil side

FINAL UNIT (X45-351X-XX) (A/5) : FINAL
Foil side view
0-00 : K,P,M,M2,X
2-71 : E,E2,E3,E9

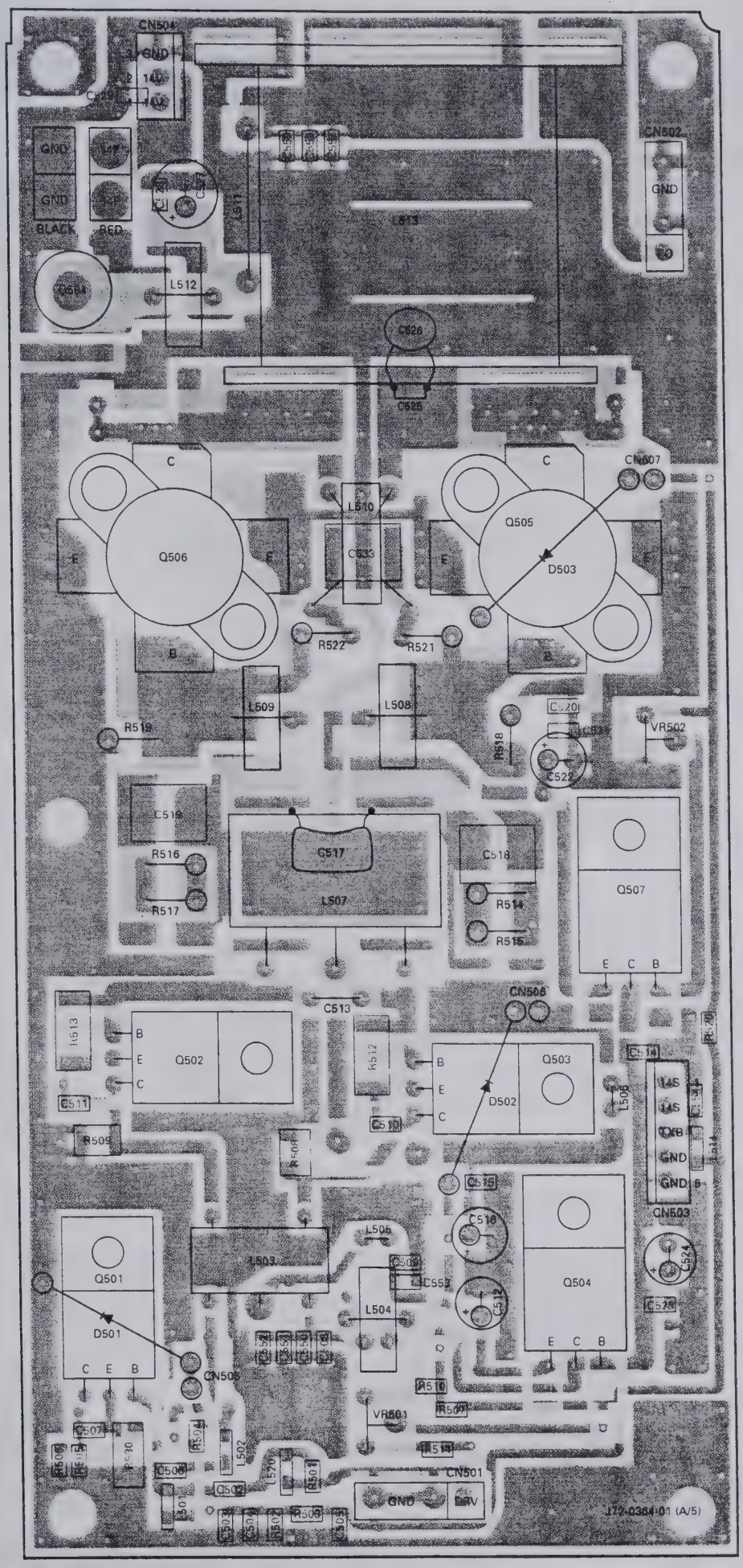

Component side
Foil side

TS-870S PC BOARD VIEW

FINAL UNIT (X45-351X-XX) (B/5) : FILTER

Component side

Foil side

Component side view 0-00 : K,P,M,M2,X 2-71 : E,E2,E3,E9

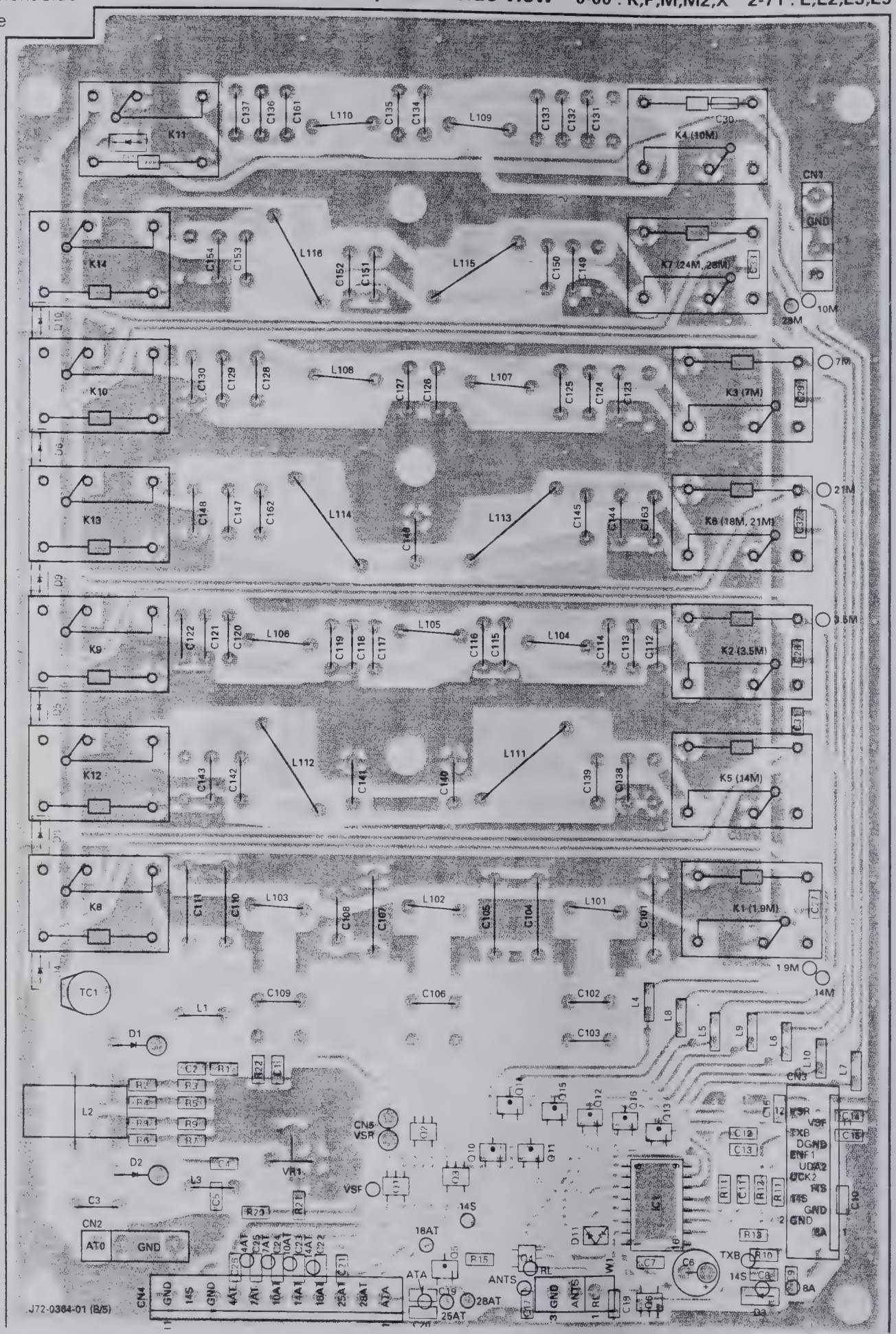

FINAL UNIT (X45-351X-XX) (B/5) : FILTER

Foil side view 0-00 : K,P,M,M2,X 2-71 : E,E2,E3,E9

Component side
Foil side

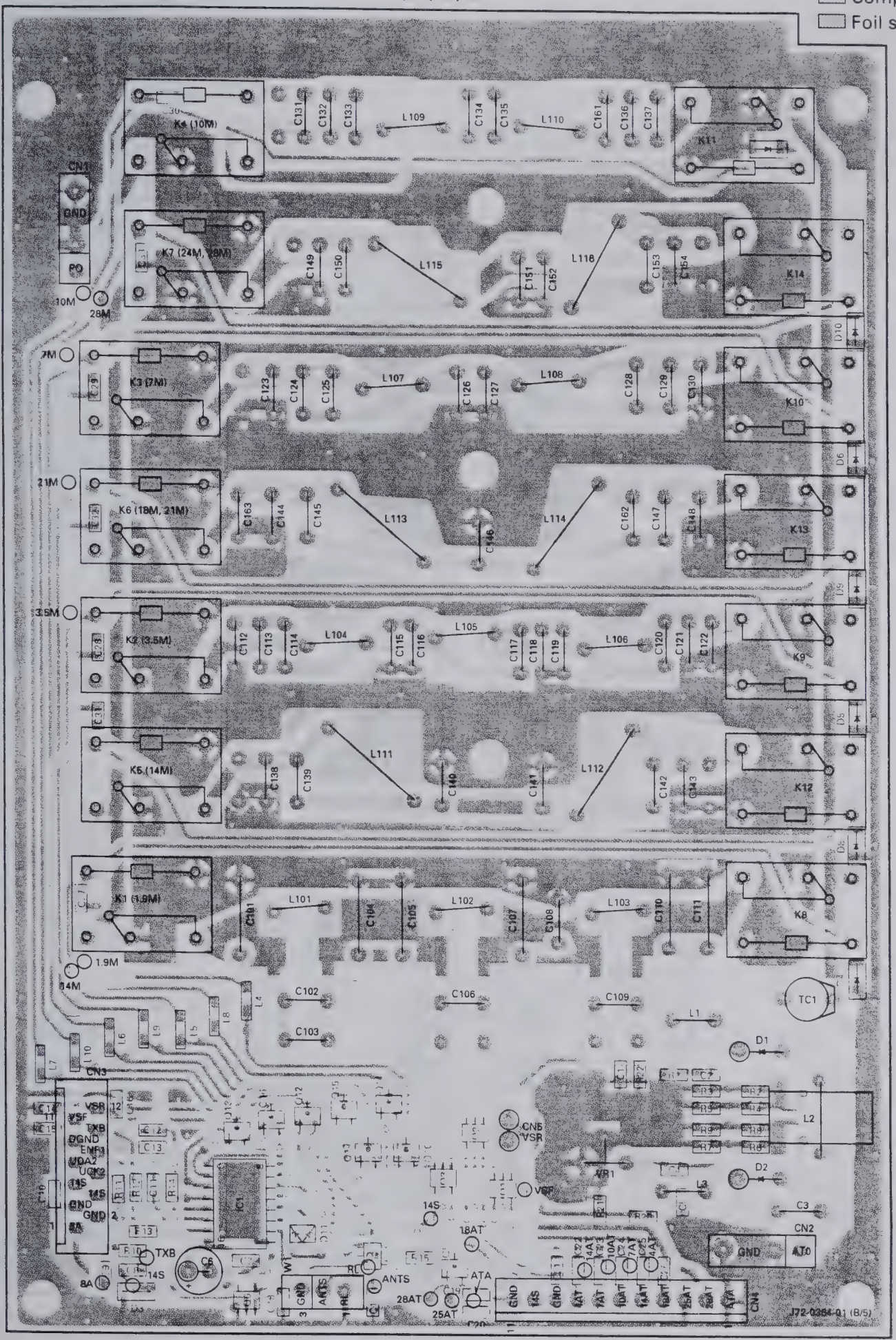

TS-870S PC BOARD VIEWS

FINAL UNIT
(X45-351X-XX) (D/5) : AVR
Component side view
0-00 : K,P,M,M2,X
2-71 : E,E2,E3,E9

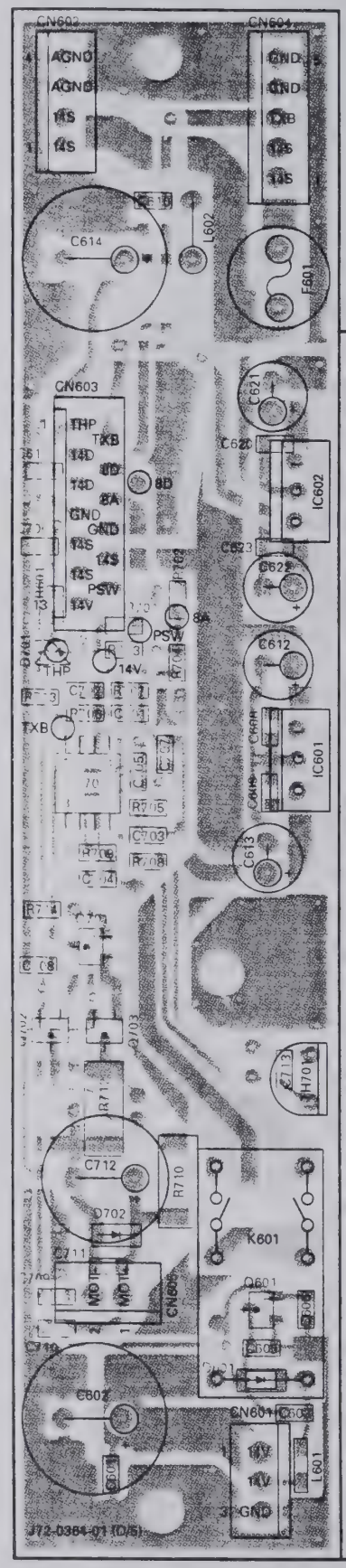

FINAL UNIT
(X45-351X-XX) (E/5) : RELAY
Component side view
0-00 : K,P,M,M2,X
2-71 : E,E2,E3,E9

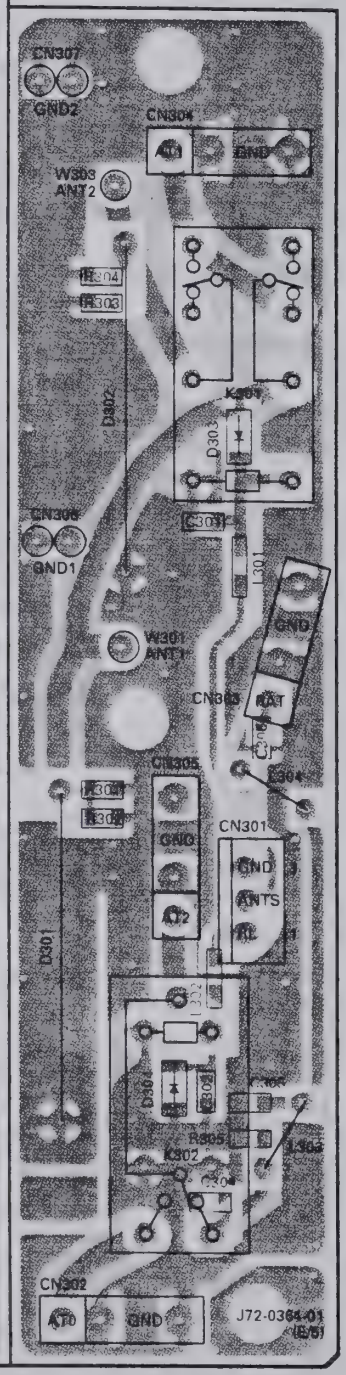

FINAL UNIT
(X45-351X-XX) (E/5) : RELAY
Foil side view
0-00 : K,P,M,M2,X
2-71 : E,E2,E3,E9

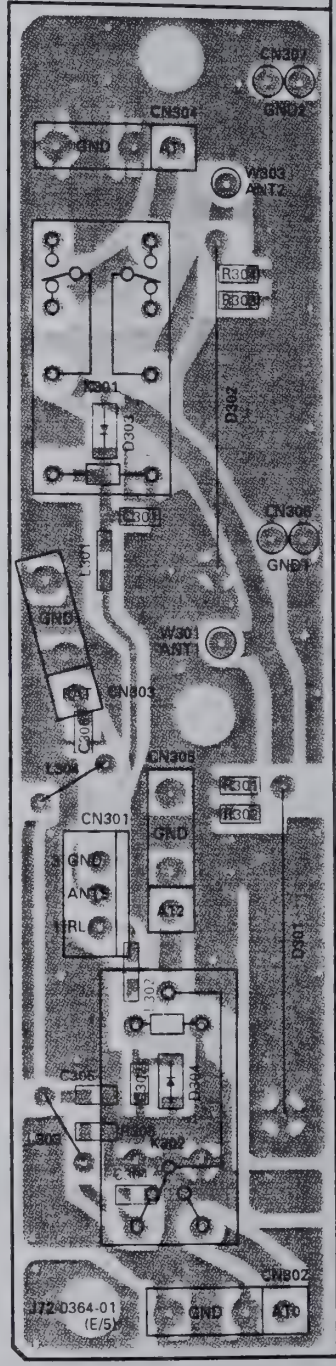

FINAL UNIT
(X45-351X-XX) (D/5) : AVR
Foil side view
0-00 : K,P,M,M2,X
2-71 : E,E2,E3,E9

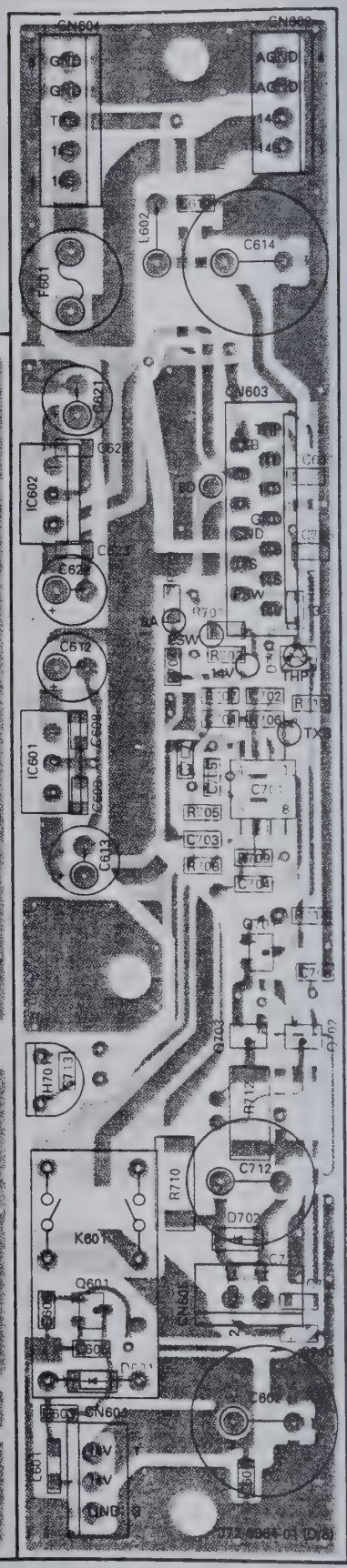

Component side
Foil side

TS-870S PC BOARD VIEWS

CONTROL UNIT (X53-356X-XX) (D/4) : MIC
Component side view
0-11 : K,P 0-21 : M 0-22 : M2 0-71 : X
2-71 : E 2-72 : E2 2-73 : E3 2-74 : E9

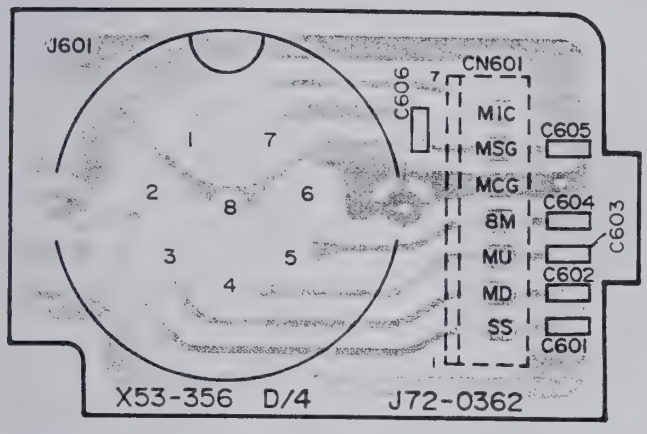

CONTROL UNIT (X53-356X-XX) (D/4) : MIC
Foil side view
0-11 : K,P 0-21 : M 0-22 : M2 0-71 : X
2-71 : E 2-72 : E2 2-73 : E3 2-74 : E9

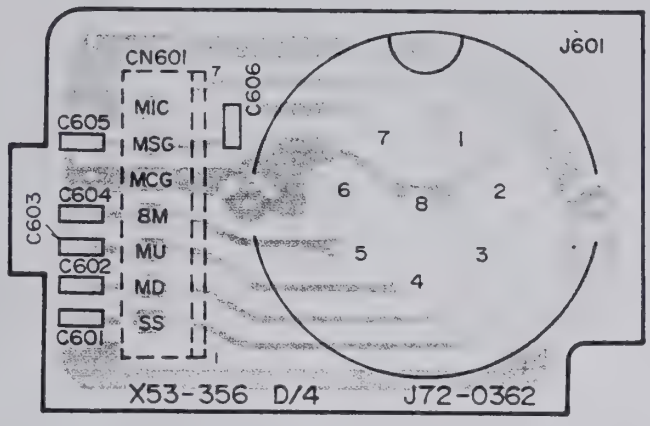

Component side
Foil side

PC BOARD VIEW TS-870S

FINAL UNIT (X45-351X-XX) (C/5)
: CONNECTION Foil side view

0-00 : K,P,M,M2,X
2-71 : E,E2,E3,E9

2SA1162
2SC2712

2SD1406

2SD1624

3SK131

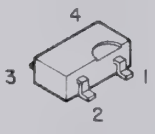

UPC7805H

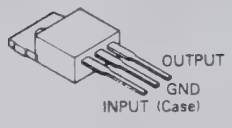

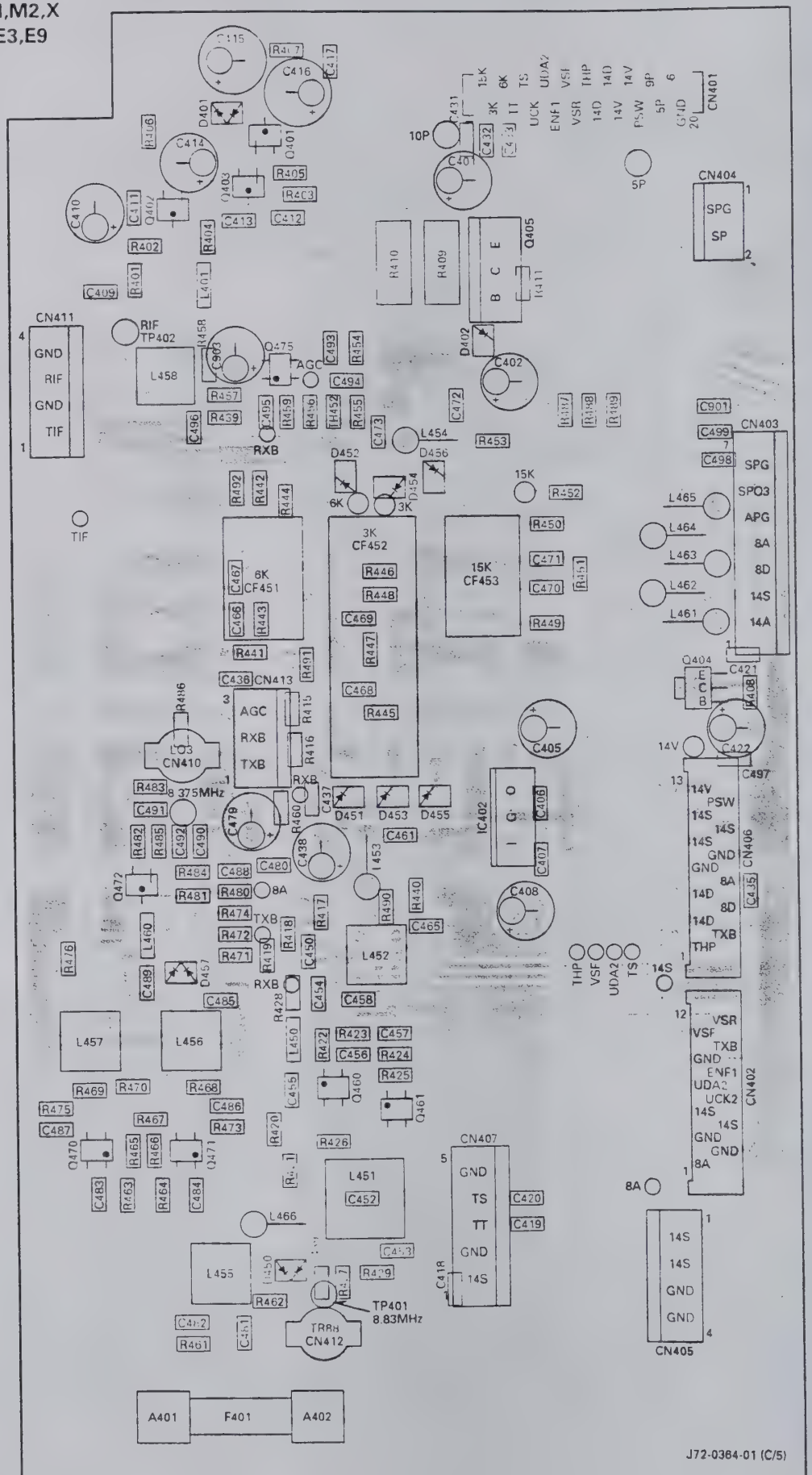

Component side
Foil side

J72-0364-01 (C/5)

DRU-3 (DIGITAL RECORDING UNIT)

DRU-3 Circuit Diagram

X43-3090-20

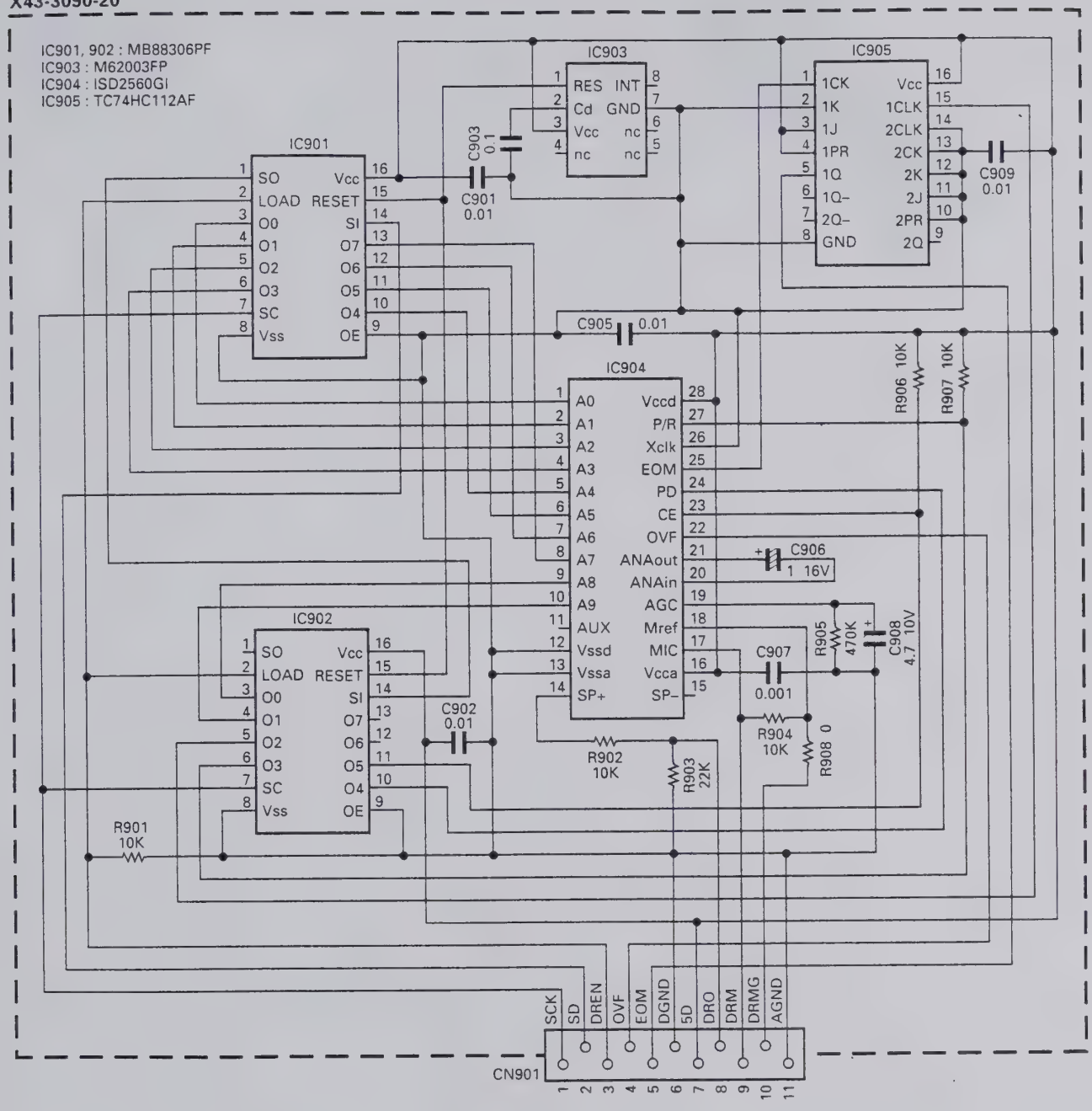

PG-2Z (DC CABLE)

PG-2Z External View

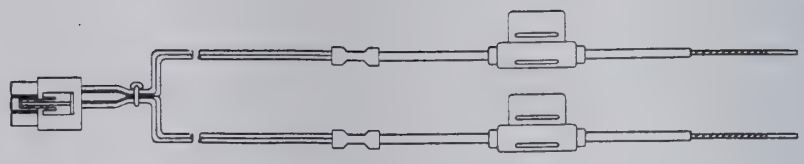

PG-2Z Parts List

Parts No.	New parts	Description
E30-3157-15		DC cable assy
F05-2531-05		Fuse (25A/32V)

SPECIFICATIONS

	Item			Rating
GENERAL	Mode			J3E (LSB, USB), A1A (CW), A3E (AM), F3E (FM), F1D (FSK)
	Number of memory channels			100
	Antenna impedance			50Ω (With Antenna Tuner 20 to 150Ω)
	Supply voltage			DC 13.8V ± 15%
	Grounding method			Negative ground
	Current	Transmit (Max.)		20.5A
		Receive (No signal)		2A
	Usable temperature range			–10°C to +50°C (+14°F to +122°F)
	Frequency stability (–10°C to +50°C)			Within ±10PPM
	Frequency accuracy (At room temperature)			Within ±10PPM
	Dimensions [W x H x D] (Projections included)			330 x 120 x 334 mm/13.0 x 4.72 x 13.1 in (339 x 135 x 375 mm/13.3 x 5.31 x 14.8 in)
	Weight			Approx. 11.5kg (25lbs)
TRANSMITTER	Frequency range	160m band		1.8*1 to 2.0*2MHz
		80m band		3.5 to 4.0*3MHz
		40m band		7.0 to 7.3*4MHz
		30m band		10.1 to 10.15MHz
		20m band		14.0 to 14.35MHz
		17m band		18.068 to 18.168MHz
		15m band		21.0 to 21.45MHz
		12m band		24.89 to 24.99MHz
		10m band		28.0 to 29.7MHz
	Output power*5	SSB, CW, FSK, FM	Max.	100W
			Min.	20W or less
		AM	Max.	25W
			Min.	20W or less
	Modulation	SSB		Balanced
		FM		Reactance
		AM		Low level
	Spurious emissions			–60dB or less
	Carrier suppression			50dB or more
	Unwanted sideband suppression (Modulation frequency 1.0kHz)			50dB or more
	Maximum frequency deviation (FM)	Wide		±5kHz or less
		Narrow		±2.5kHz or less
	Transmit frequency characteristics (–6dB) (TX lower cutoff : 300Hz, TX bandwidth : 2.3kHz)			300 to 2600Hz
	XIT shift frequency range			±9.99kHz
	Microphone imppedance			600Ω

*1 1.81MHz : Europe, France, Holland; 1.83MHz : Belgium, Spain

*2 1.85MHz : Belgium, France, Holland, Spain

*3 3.8MHz : Europe, Belgium, France, Holland, Spain

*4 7.1MHz : Europe, Belgium, France, Holland, Spain

*5 Belgium, Spain : 10W fixed on 160m band

TS-870S

SPECIFICATIONS

	Item			Rating
RECEIVER	Circuit type			Quadruple conversion superheterodyne
	Frequency range			100kHz to 30MHz
	Intermediate frequency			1st : 73.05MHz, 2nd : 8.83MHz, 3rd : 455kHz, 4th : 11.3kHz
	Sensitivity	SSB, CW, FSK (At 10dB (S+N)/N)	100kHz to 500kHz	1μV or less
			500kHz to 1.62MHz*6	4μV or less
			1.62MHz*6 to 24.5MHz	0.2μV or less
			24.5MHz to 30MHz	0.13μV or less
		AM (At 10dB (S+N)/N)	100kHz to 500kHz	2μV or less
			500kHz to 1.62MHz*6	31.6μV or less
			1.62MHz*6 to 24.5MHz	2μV or less
			24.5MHz to 30MHz	2μV or less
		FM (At 12dB SINAD)	28MHz to 30MHz	0.25μV or less
	Selectivity	SSB Lo : 300Hz, Hi : 2600Hz		–6dB : 2.3kHz, –60dB : 3.3kHz
		CW Width : 200Hz		–6dB : 200Hz, –60dB : 450Hz
		FSK Width : 500Hz		–6dB : 500Hz, –60dB : 1000Hz
		AM Lo : 100Hz, Hi : 4000Hz		–6dB : 9kHz, –60dB : 12kHz
		FM Width : 14kHz		–6dB : 14kHz, –60dB : 18kHz
	Image rejection (1.8MHz to 30MHz)			80dB or more
	1st IF rejection (1.8MHz to 30MHz)			80dB or more
	Notch filter atteneuation			40dB or more
	RIT shift frequency range			±9.99kHz
	Squelch sensitivity	SSB, CW, FSK, AM	100kHz to 500kHz	2μV or less
			500kHz to 1.62MHz*6	20μV or less
			1.62MHz*6 to 30MHz	2μV or less
		FM	28MHz to 30MHz	0.25μV or less
	Audio output (8Ω, 10% distortion)			1.5W or more
	Audio output impedance			8Ω

*6 1.705MHz : Canada, U.S.A.

Specifications are subject to change without notice or obligation due to ongoing technological developments.

KENWOOD CORPORATION
14-6, Dogenzaka 1-chome, Shibuya-ku, Tokyo 150, Japan

KENWOOD SERVICE CORPORATION
P.O. BOX 22745, 2201 East Dominguez Street, Long Beach, CA 90801-5745, U.S.A

KENWOOD ELECTRONICS LATIN AMERICA S.A.
P.O. BOX 55-2791 Piso 6 Plaza Chase Cl. 47 y Aquilino de la Guardio Panama, Republic of Panama

KENWOOD ELECTRONICS CANADA INC.
6070 Kestrel Road, Mississauga, Ontario, Canada L5T 1S8

KENWOOD ELECTRONICS DEUTSCHLAND GMBH
Rembrücker Str. 15, 63150 Heusenstamm, Germany

KENWOOD ELECTRONICS BENELUX N.V.
Mechelsesteenweg 418 B-1930 Zaventem, Belgium

TRIO-KENWOOD FRANCE S.A.
13, Boulevard Ney, 75018 Paris, France

TRIO-KENWOOD U.K. LIMITED
KENWOOD House, Dwight Road, Watford, Herts., WD1 8EB United Kingdom

KENWOOD ELECTRONICS NEDERLAND B.V.
Amsterdamseweg 35, 1422 AC Uithoorn, The Netherlands

KENWOOD ELECTRONICS ITALIA S.p.A.
Via G. Sirtori, 7/9 20129 Milano, Italy

KENWOOD IBERICA S.A.
Bolivia. 239-08020 Barcelona, Spain

KENWOOD ELECTRONICS AUSTRALIA PTY. LTD.
(A.C.N. 001 499 074)
P.O. Box 504, 8 Figtree Drive, Australia Centre, Homebush, N.S.W. 2140, Australia

KENWOOD & LEE ELECTRONICS, LTD.
Unit 3712-3724, Level 37, Tower one Metroplaza, 223 Hing Fong Road, Kwai Fong, N.T., Hong Kong

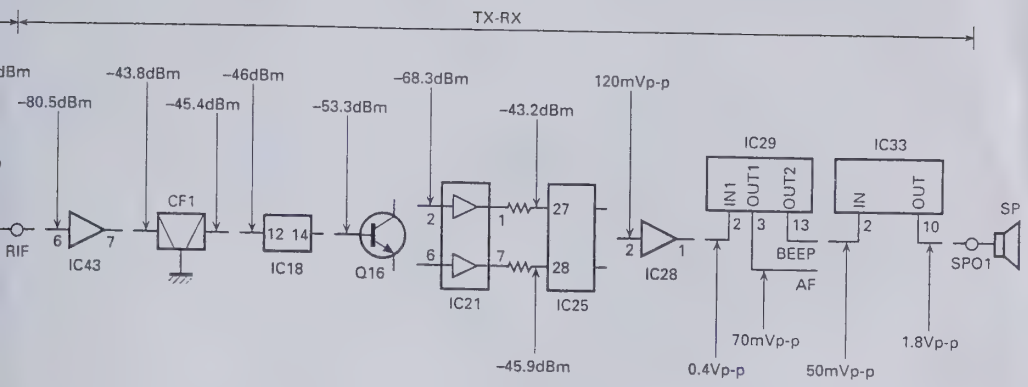
TX-RX
dBm
-80.5dBm
-43.8dBm
-45.4dBm
-46dBm
-53.3dBm
-68.3dBm
-43.2dBm
120mVp-p
RIF
IC43
CF1
IC18
Q16
IC21
IC25
IC28
IC29
IC33
IN1
OUT1
OUT2
IN
OUT
BEEP
AF
SP
SPO1
-45.9dBm
0.4Vp-p
70mVp-p
50mVp-p
1.8Vp-p

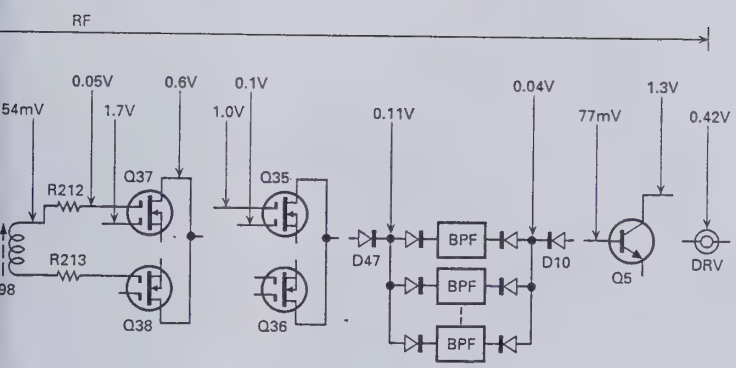
RF
0.05V
0.6V
0.1V
54mV
1.7V
1.0V
0.11V
0.04V
77mV
1.3V
0.42V
R212
Q37
Q35
R213
98
Q38
Q36
D47
BPF
BPF
BPF
D10
Q5
DRV

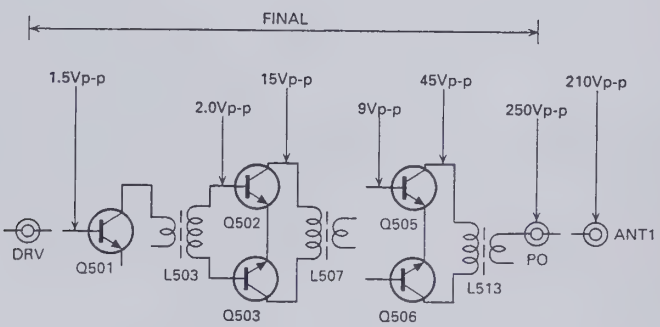
FINAL
1.5Vp-p
15Vp-p
45Vp-p
210Vp-p
2.0Vp-p
9Vp-p
250Vp-p
DRV
Q501
Q502
Q503
L503
L507
Q505
Q506
L513
PO
ANT1

TS-870S

SPECIFICATIONS

	Item			Rating
RECEIVER	Circuit type			Quadruple conversion superheterodyne
	Frequency range			100kHz to 30MHz
	Intermediate frequency			1st : 73.05MHz, 2nd : 8.83MHz, 3rd : 455kHz, 4th : 11.3kHz
	Sensitivity	SSB, CW, FSK (At 10dB (S+N)/N)	100kHz to 500kHz	1μV or less
			500kHz to 1.62MHz*6	4μV or less
			1.62MHz*6 to 24.5MHz	0.2μV or less
			24.5MHz to 30MHz	0.13μV or less
		AM (At 10dB (S+N)/N)	100kHz to 500kHz	2μV or less
			500kHz to 1.62MHz*6	31.6μV or less
			1.62MHz*6 to 24.5MHz	2μV or less
			24.5MHz to 30MHz	2μV or less
		FM (At 12dB SINAD)	28MHz to 30MHz	0.25μV or less
	Selectivity	SSB Lo : 300Hz, Hi : 2600Hz		–6dB : 2.3kHz, –60dB : 3.3kHz
		CW Width : 200Hz		–6dB : 200Hz, –60dB : 450Hz
		FSK Width : 500Hz		–6dB : 500Hz, –60dB : 1000Hz
		AM Lo : 100Hz, Hi : 4000Hz		–6dB : 9kHz, –60dB : 12kHz
		FM Width : 14kHz		–6dB : 14kHz, –60dB : 18kHz
	Image rejection (1.8MHz to 30MHz)			80dB or more
	1st IF rejection (1.8MHz to 30MHz)			80dB or more
	Notch filter atteneuation			40dB or more
	RIT shift frequency range			±9.99kHz
	Squelch sensitivity	SSB, CW, FSK, AM	100kHz to 500kHz	2μV or less
			500kHz to 1.62MHz*6	20μV or less
			1.62MHz*6 to 30MHz	2μV or less
		FM	28MHz to 30MHz	0.25μV or less
	Audio output (8Ω, 10% distortion)			1.5W or more
	Audio output impedance			8Ω

*6 1.705MHz : Canada, U.S.A.

Specifications are subject to change without notice or obligation due to ongoing technological developments.

KENWOOD CORPORATION
14-6, Dogenzaka 1-chome, Shibuya-ku, Tokyo 150, Japan

KENWOOD SERVICE CORPORATION
P.O. BOX 22745, 2201 East Dominguez Street, Long Beach, CA 90801-5745, U.S.A

KENWOOD ELECTRONICS LATIN AMERICA S.A.
P.O. BOX 55-2791 Piso 6 Plaza Chase Cl. 47 y Aquilino de la Guardio Panama, Republic of Panama

KENWOOD ELECTRONICS CANADA INC.
6070 Kestrel Road, Mississauga, Ontario, Canada L5T 1S8

KENWOOD ELECTRONICS DEUTSCHLAND GMBH
Rembrücker Str. 15, 63150 Heusenstamm, Germany

KENWOOD ELECTRONICS BENELUX N.V.
Mechelsesteenweg 418 B-1930 Zaventem, Belgium

TRIO-KENWOOD FRANCE S.A.
13, Boulevard Ney, 75018 Paris, France

TRIO-KENWOOD U.K. LIMITED
KENWOOD House, Dwight Road, Watford, Herts., WD1 8EB United Kingdom

KENWOOD ELECTRONICS NEDERLAND B.V.
Amsterdamseweg 35, 1422 AC Uithoorn, The Netherlands

KENWOOD ELECTRONICS ITALIA S.p.A.
Via G. Sirtori, 7/9 20129 Milano, Italy

KENWOOD IBERICA S.A.
Bolivia, 239-08020 Barcelona, Spain

KENWOOD ELECTRONICS AUSTRALIA PTY. LTD.
(A.C.N. 001 499 074)
P.O. Box 504, 8 Figtree Drive, Australia Centre, Homebush, N.S.W. 2140, Australia

KENWOOD & LEE ELECTRONICS, LTD.
Unit 3712-3724, Level 37, Tower one Metroplaza, 223 Hing Fong Road, Kwai Fong, N.T., Hong Kong

CIRCUIT DESCRIPTION

■ Various control circuits by the digital to analog converter

The circuits whose signal levels were varied with volume controls or adjusted with semi-fixed volumes can be controlled with a microcomputer by using an 8-channel digital to analog converter.

The digital-to-analog converter (M62363FP) is a ladder-type variable attenuator with 8-channel independent inputs, which is used to output an output voltage by entering a fixed voltage, or is used as for volume by entering the control signals directly. Table 8 lists controls in each channel.

CH No.	PIN No.	Signal name	Control	Output to
1	2	ALG	ALC reference voltage	IC8-5 operational amplifier
2	3	NBV	NB threshold voltage	IC9-5 NB pulse generation circuit
3	10	POC	Power control reference voltage	Q43 ALC circuit differential input section
4	11	PRO	Reflected wave protection adjustment	Q49 protection control circuit
5	14	Unused		
6	15	Unused		
7	22	POVR	Gain correction for power control	IC8-10 TGC circuit
8	23	TXG	Gain correction between bands	IC8-9 TGC circuit

Table 8 digital-to-analog converter control

■ ALC circuit

The TS-870S uses the same control circuit as for the TS-850 as shown in Figure 8. Q43 and Q44 comprise a differential amplifier, and the VSF (forward wave voltage) signal is compared with the IC7-VO3 power control voltage (POC). The POC voltage is controlled by the microprocessor according to the power settings, such as power volume and mode-specific power down.

Q45 is a switch for average power control during AM transmission. In modes other than AM, the ALC is controlled by detecting the peak value, but in AM mode, a control output smoothing circuit is used to control output power with the average power.

In AM mode, the AMB signal and the base of Q46 go HIGH. The collector of Q48 goes HIGH, and about a 20ms pulse is input to the base of Q51 to turn it ON. Since Q45 is still OFF immediately after transmission starts, the ALC is controlled by detecting the peak value. However, average value control is used after about 20ms, and the average output does not change when modulation occurs. If the ALC is controlled by the average value soon after transmission starts, the ALC voltage does not stabilize for awhile and the preset power is exceeded. Thus, the ALC is controlled by detecting the peak value soon after transmission starts.

The differential amplifier output level is converted by Q47, Q50, and Q52, and the gain is controlled by the second gate of the Q39 ALC amplifier.

Q49 controls SWR protection using the adjusted VSR (reflected wave voltage) signal.

The level of the voltage taken from the ALC circuit is converted by IC6 (B/2) and the ALC meter signal is output to the A/D port of the control unit as the ALM signal. The ALC meter is adjusted so that it indicates a value according to the DSP output level set in the adjustment mode.

■ Transmission gain control

If transmission occurs with several bands as with an HF transceiver, the gain changes between bands due to the effects of frequency characteristics of the final unit, low-pass filter, or mixer circuit, and the CAR level must be adjusted each time the band is changed.

This model uses a pin diode variable ATT and microprocessor-controlled digital-to-analog converter to correct the total gain between bands and correct the gain with power control. Thus, the total gain is the same in each band.

TS-870S

CIRCUIT DESCRIPTION

■ CAR control

The CAR volume signal is read by the analog to digital converter and output to the DSP via the microprocessor. The DSP controls the output level required according to the mode. If PROC is OFF in SSB mode and in FM mode, the level is fixed, but in other modes it can be adjusted in the 30-dB range using the CAR control.

The level required for each adjustment is output in the adjustment mode to facilitate adjustment.

■ Final circuit

The drive output from the CN4 of the RF unit is input to CN501 of the final section (X45-351 A/5). The harmonics of the signal amplified to 100W by Q501 to Q505 are attenuated by a low-pass filter in the filter section (X45-351 B/5), and the resulting signal goes to the relay section (X45-351 E/5).

The transmit signal input to the relay section is passed through the transmit/receive switching relay, the through/in relay in the AT unit (X53-3340-02), and the ANT A/B switching relay, and goes to the ANT terminal.

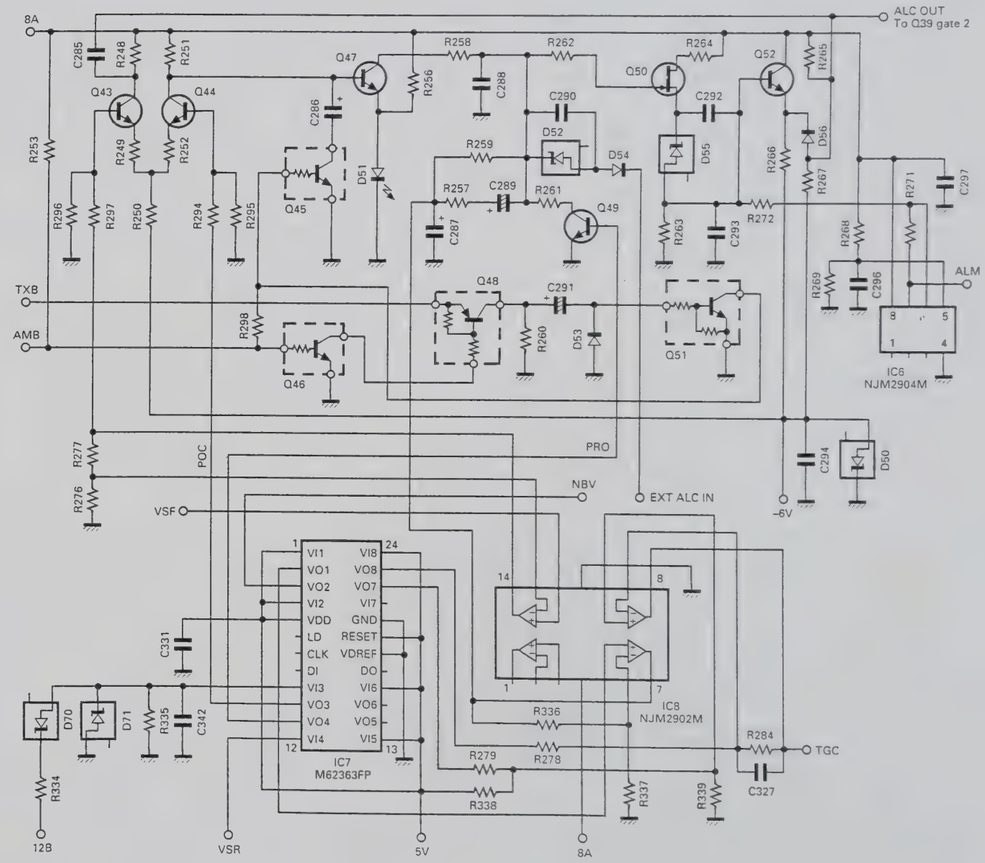

Fig. 8 ALC circuit

CIRCUIT DESCRIPTION

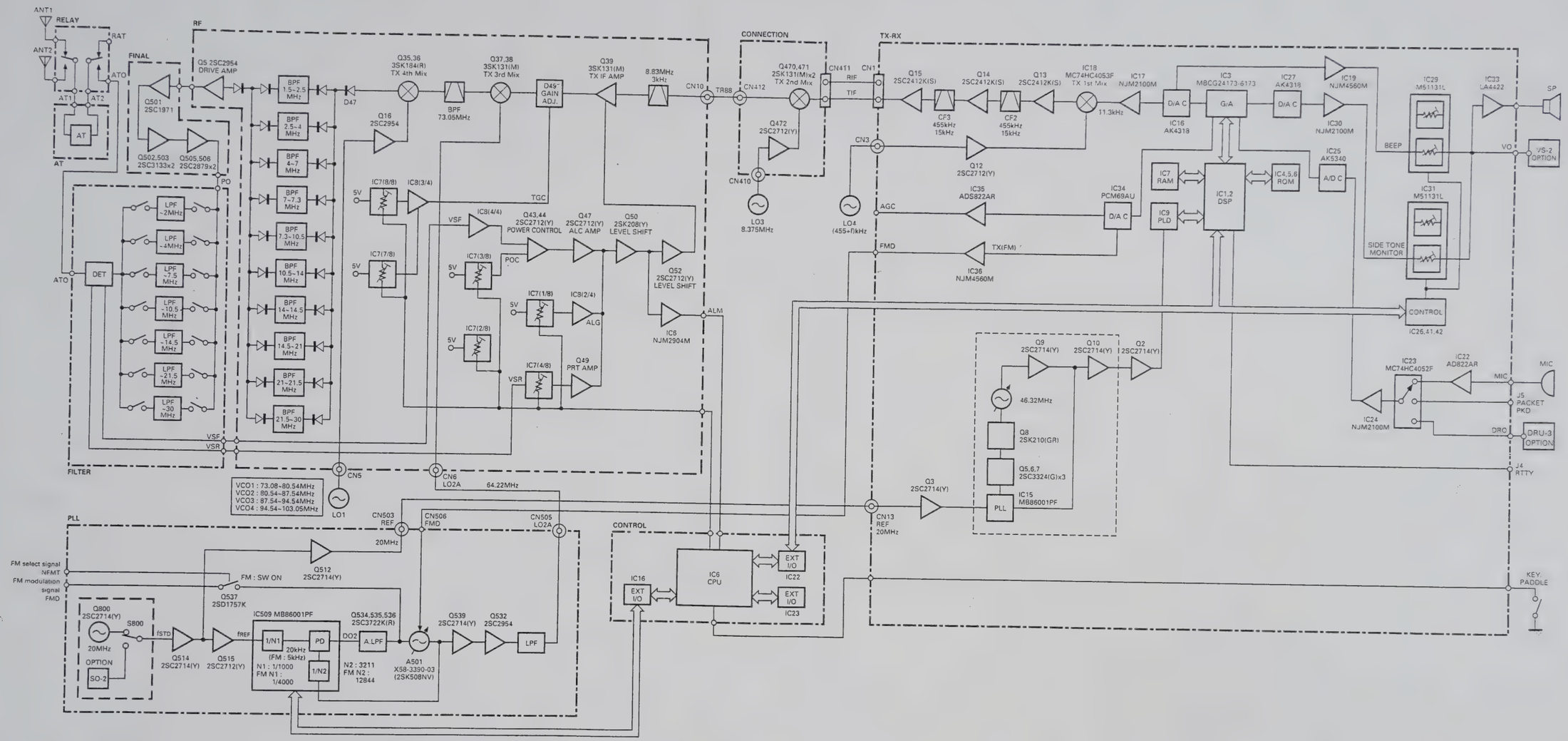

Fig. 7 Transmitter block diagram

EXPLODED VIEW

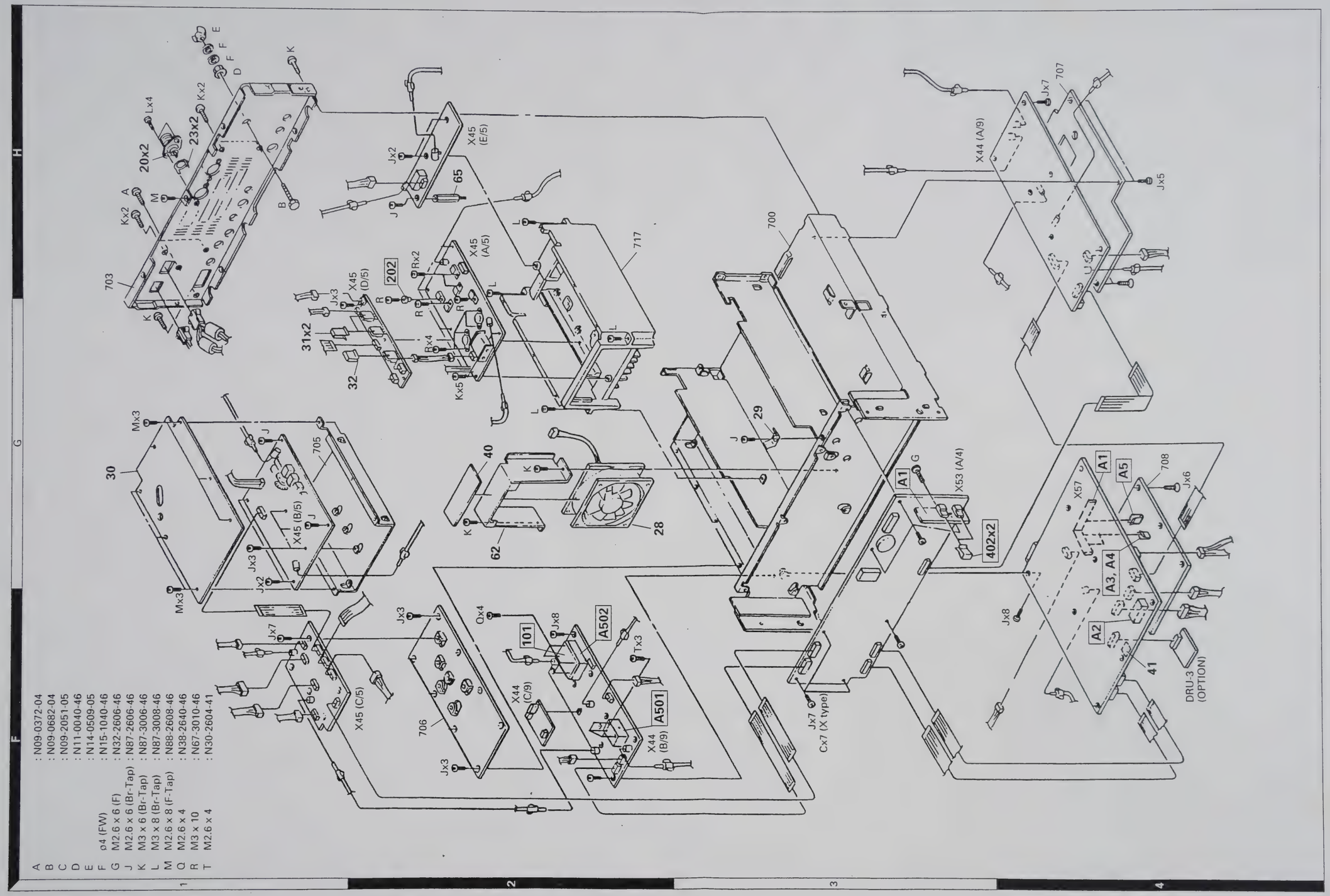

Parts with the exploded numbers larger than 700 are not supplied.

EXPLODED VIEW

LCD ASSY (B38-0736-05)

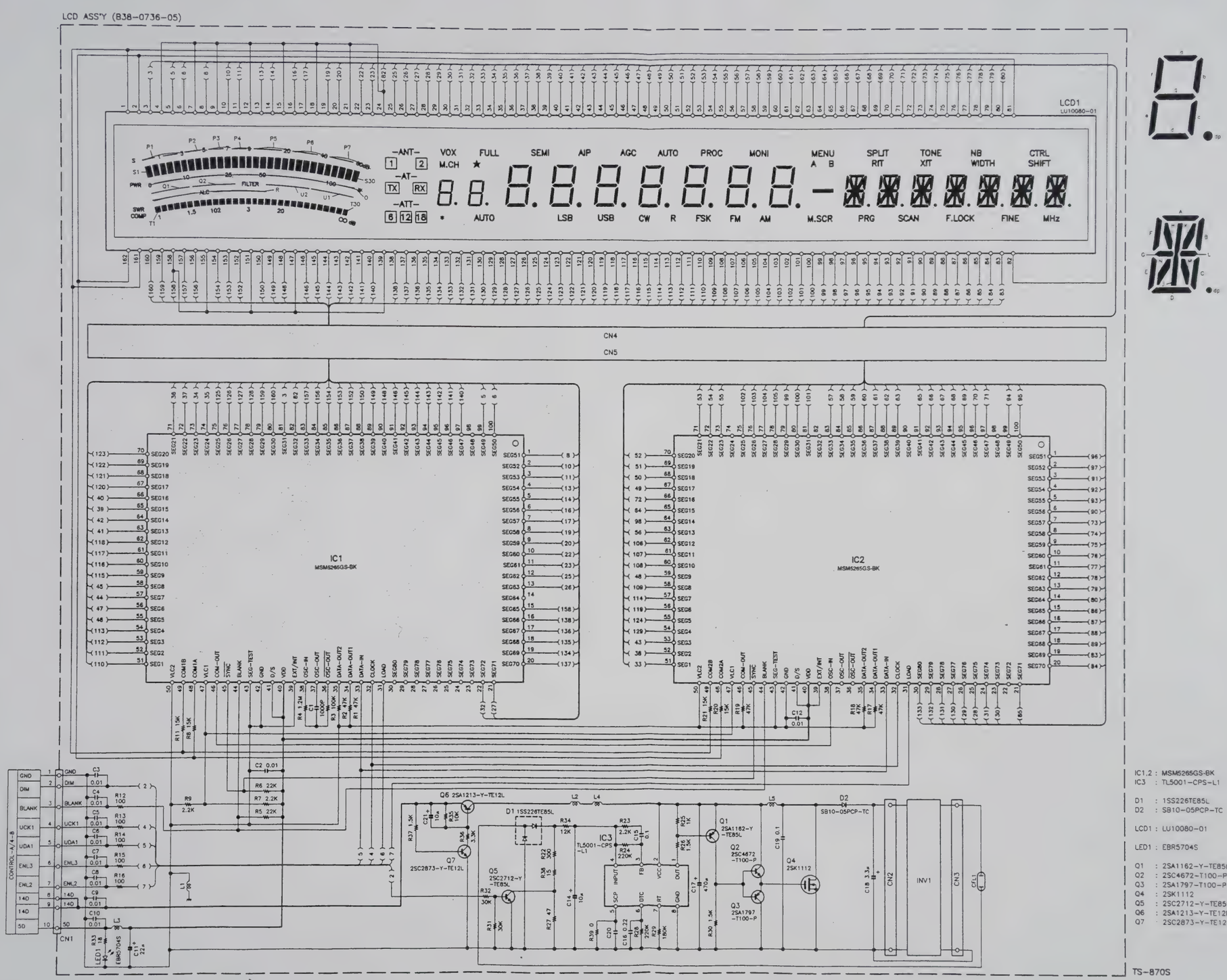

IC1,2 : MSM5265GS-BK
IC3 : TL5001-CPS-L1

D1 : 1SS226TE85L
D2 : SB10-05PCP-TC

LCD1 : LU10080-01

LED1 : EBR57045

Q1 : 2SA1162-Y-TE85L
Q2 : 2SC4672-T100-P
Q3 : 2SA1797-T100-P
Q4 : 2SK1112
Q5 : 2SC2712-Y-TE85L
Q6 : 2SA1213-Y-TE12L
Q7 : 2SC2873-Y-TE12L

TS-870S PC BOARD VIEW

RF UNIT (X44-3210-00) (A/9) : RF Component side view

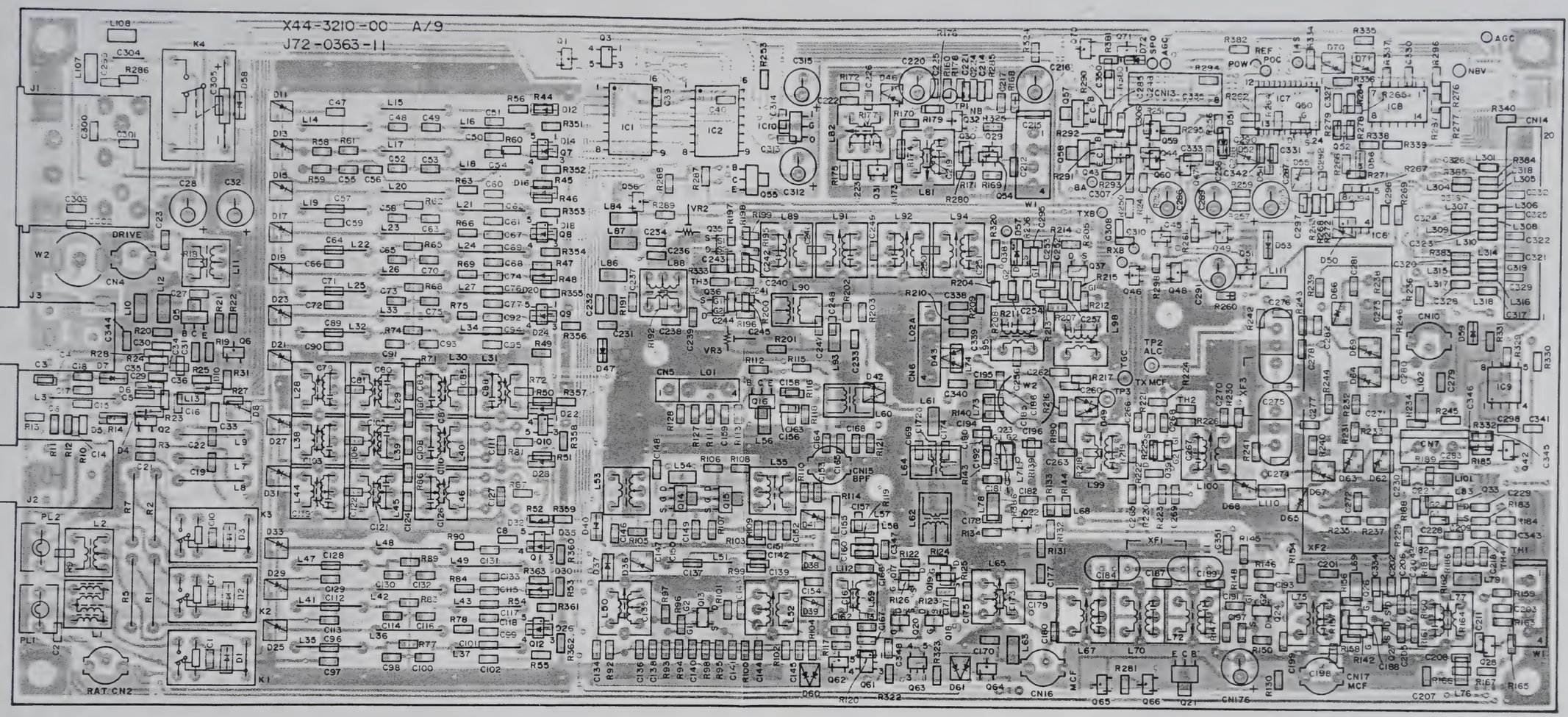

Component side
Foil side

DTA114EK DTC143EK
DTA124EK DTC143TK
DTA143EK 2SA1162
DTC114EK 2SC2712
DTC124EK 2SC2714

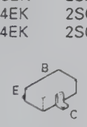

2SC2954
2SD1624
2SB1188

2SK2218

2SK208
2SK520

3SK131
3SK184

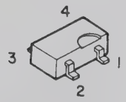

FMA1
FMC3
FMG4

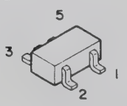

NJM78L05UA

RF UNIT (X44-3210-00) (A/9) : RF Foil side view

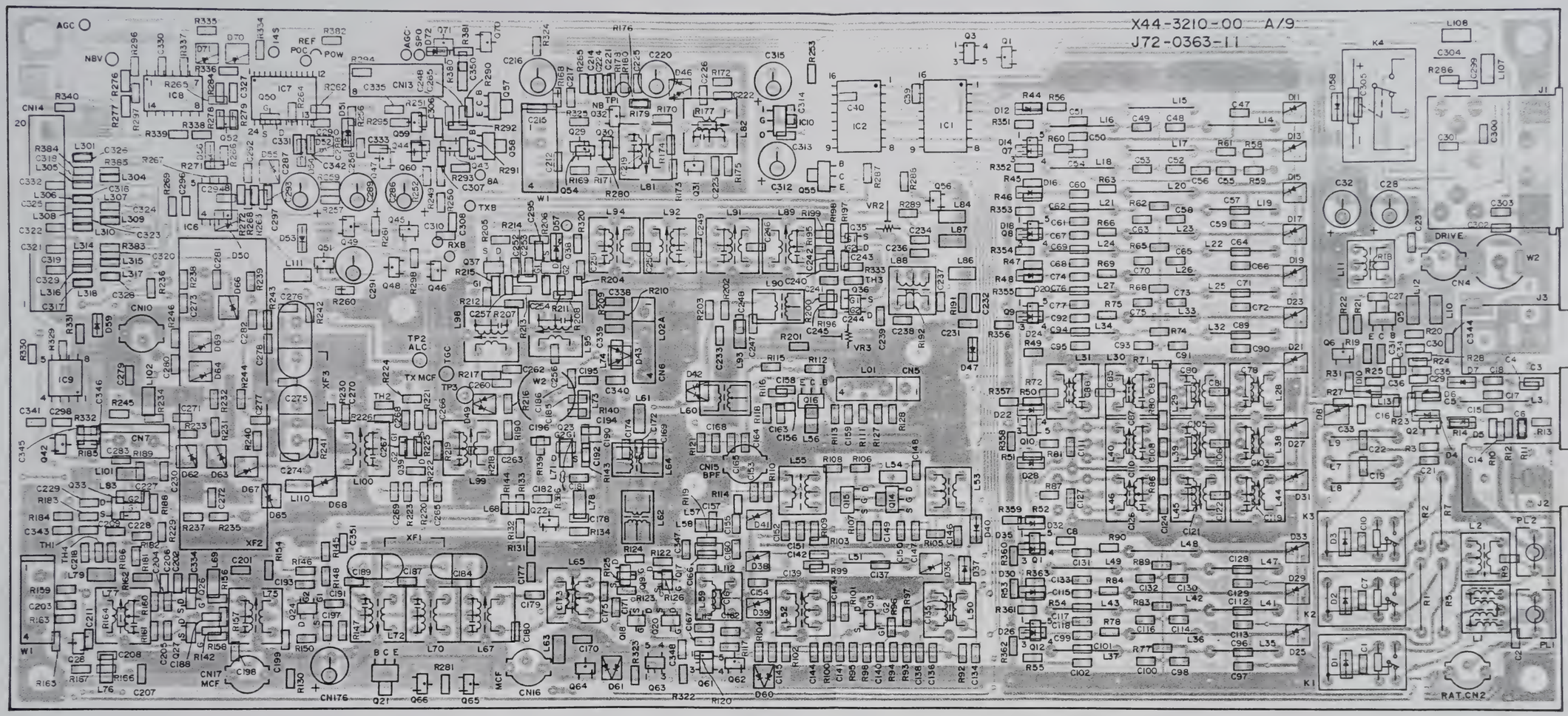

Component side
Foil side

NJM2903M
NJM2904M

NJM2902M

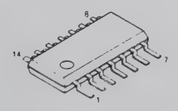

TC9174F

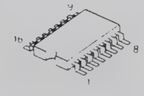

M62363FP

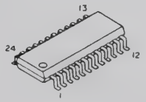

TS-870S PC BOARD VIEWS

RF UNIT (X44-3210-00) (B/9) : PLL Component side view

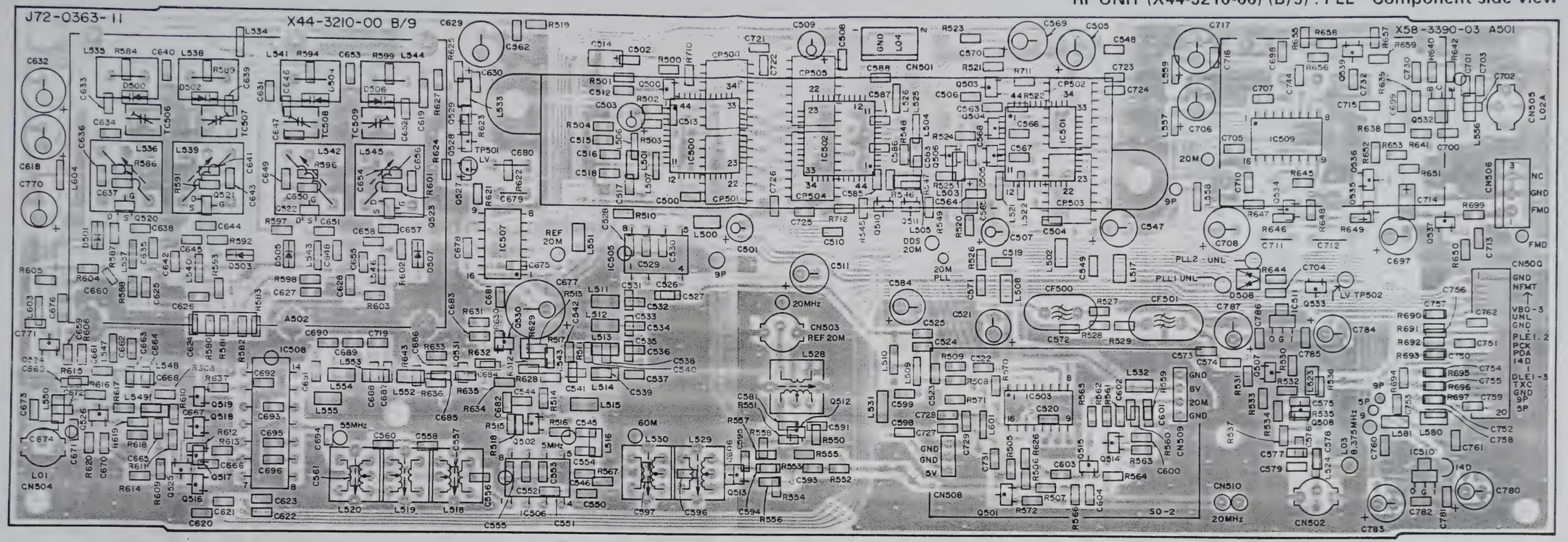

RF UNIT (X44-3210-00) (B/9) : PLL Foil side view

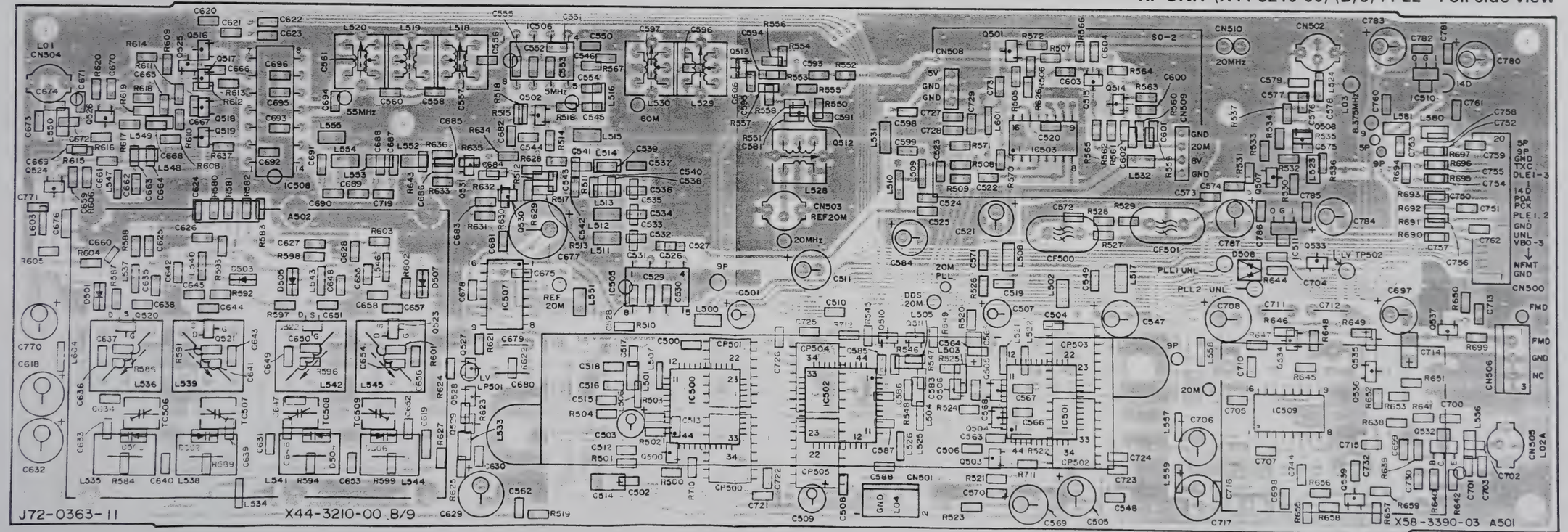

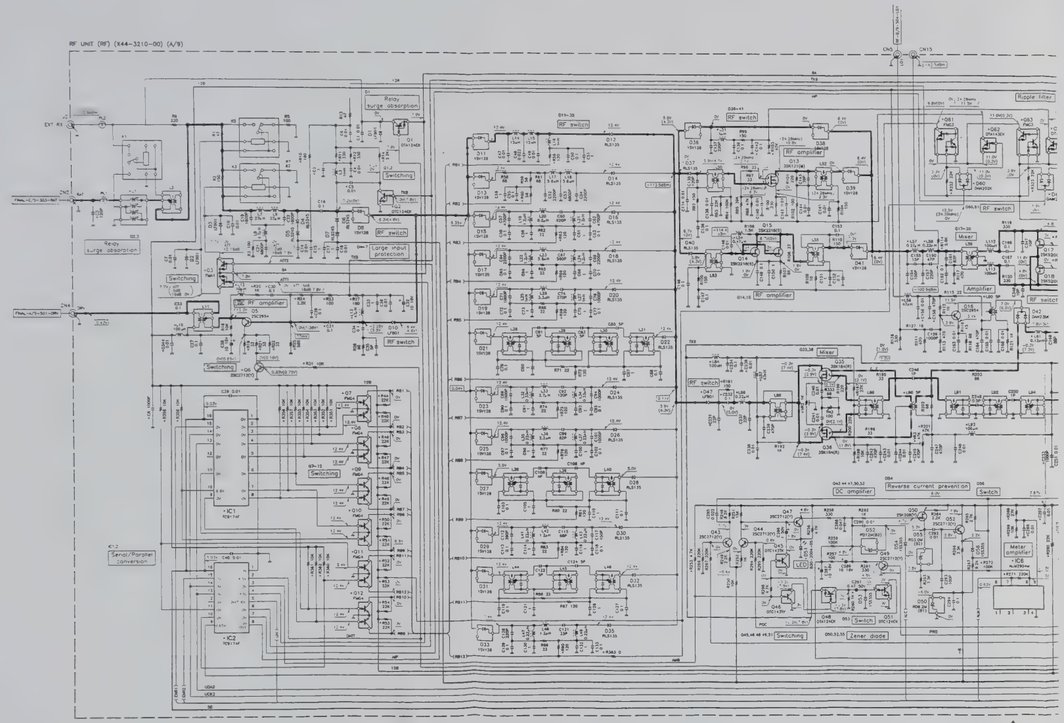

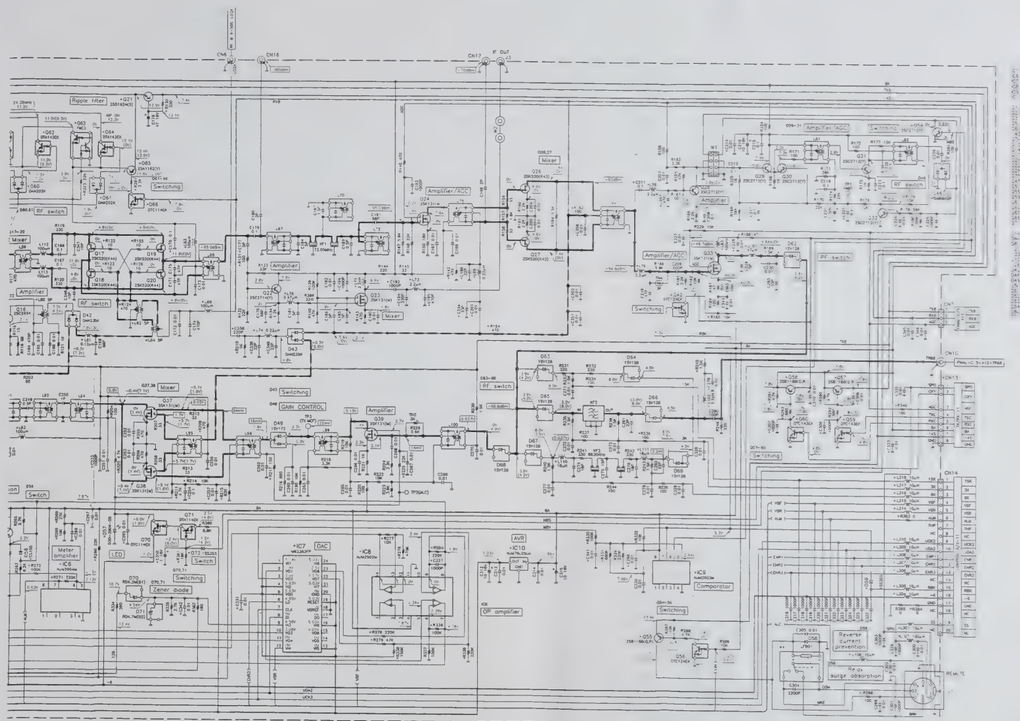

Note) • Ref. No. : Parts of pattern 1.

TS-870S CIRCUIT DIAGRAM

RF UNIT (X44-3210-00) (B/9) : PLL

RF UNIT (PLL) (X44-3210-00) (B/9)

DTA124EK 2SC2996
DTC114EK 2SC3722K
2SC2712 2SD1757K
2SC2714

2SC2954

2SK508NV

TA78DS09F
TA78L09F

SN16913P

SN76514N

MB86001PF
UPD74HC390G

F71022

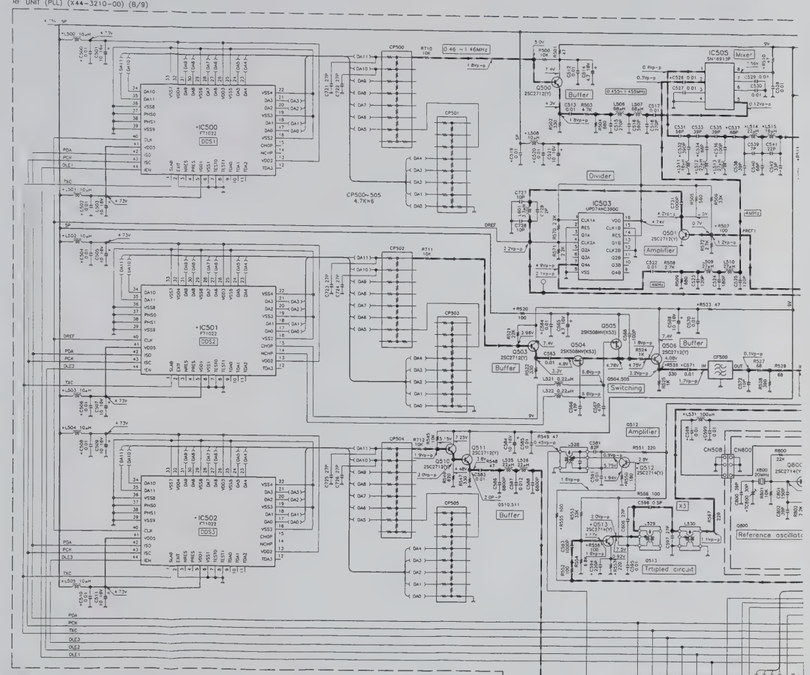

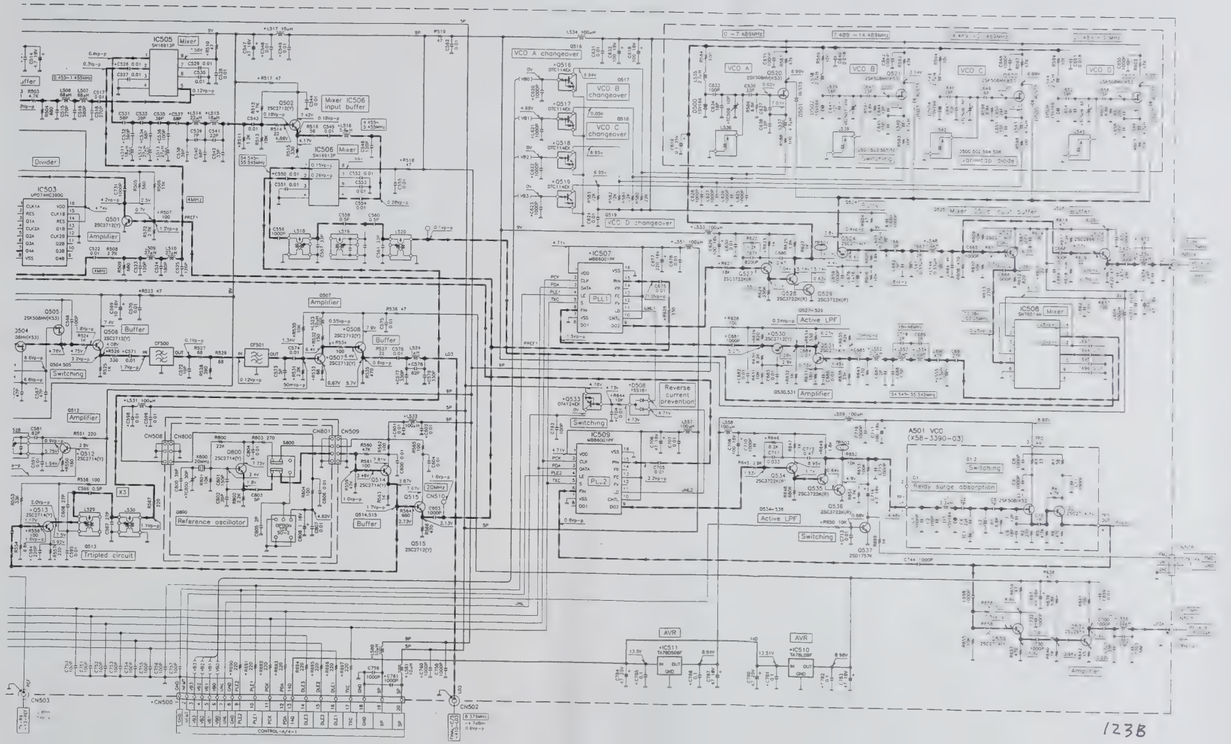

(PLL)
IC500~502 : F71022
IC503 : uPD74HC390G
IC505,506 : SN16913P
IC507,509 : MB86001PF
IC508 : TA78S(*)AN
IC510 : TA78L09F
IC511 : TA78D09F

Q500~503,506~508,510,511,515,530 : 2SC2712(Y)
Q504,505,520~523 : 2SK508NV(K53)
Q512~514,524,525,531,539,800 : 2SC2714(Y)
Q516~519 : DTC114EK
Q526 : 2SC2712(GR)
Q527~529,534~536 : 2SC3722K(R)
Q533 : DTA124EK
Q537 : 2SD1757K

Q500,502,504,506 : 1SV166
Q501,503,505,507 : RLS73
Q508 : 1SS181

(VCO)
D1 : 2SK508(K52)
Q2 : 2SC2714(Y)

D1 : 1SV164

123 A

123B

CIRCUIT DIAGRAM TS-870S

FINAL UNIT (X45-351X-XX) (A,B,D,E/5) 0-00 : K,P,M,M2,X 2-71 : E,E2,E3,E9

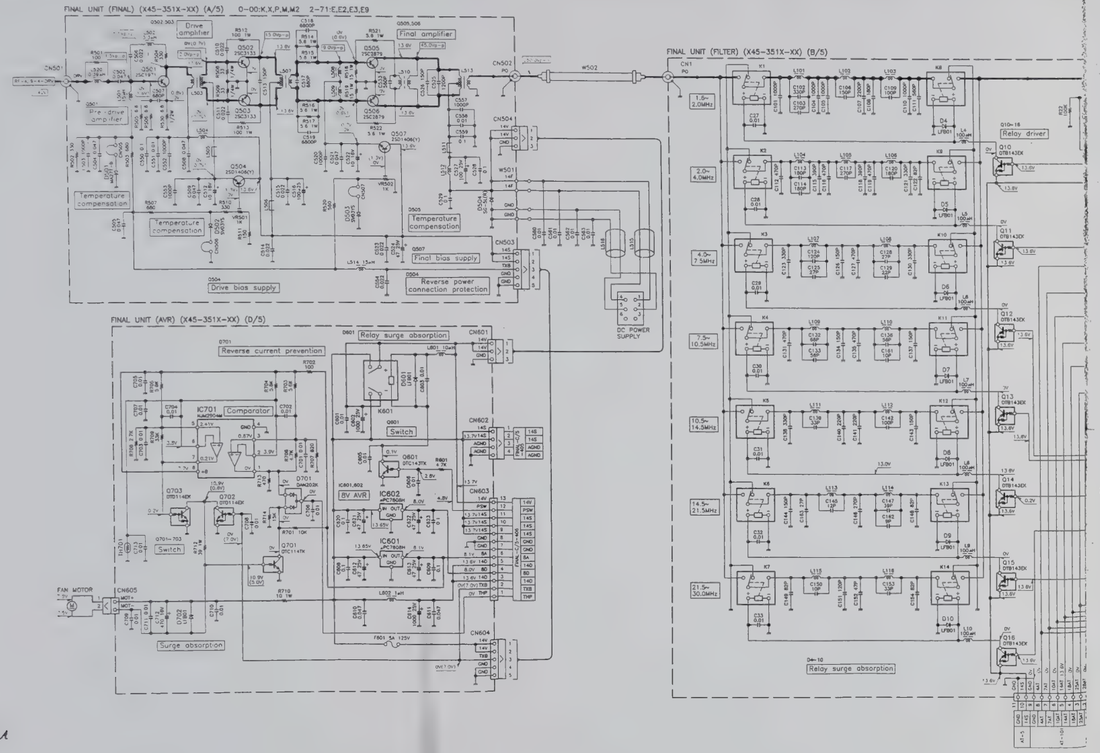

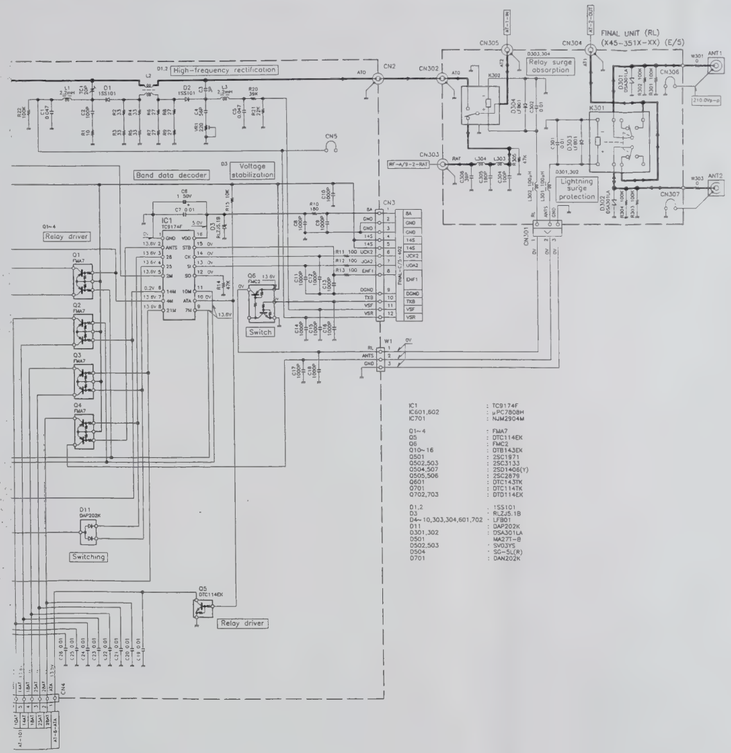

IC1	: TC9174F
IC601,602	: μPC1508H
IC701	: NJM2904M
Q1~4	: FMA7
Q5	: DTC114EK
Q6	: FMC2
Q10~16	: DTB143EK
Q501	: 2SC1971
Q502,503	: 2SC3133
Q504,507	: 2SD1406(Y)
Q505,506	: 2SC2879
Q601	: DTC143TK
Q701	: DTC114TK
Q702,703	: DTD114EK
D1,2	: 1SS101
D3	: RLZ5.1B
D4~10,303,304,601,702	: LFB01
D11	: DAP202K
D301,302	: DSA3011A
D501	: MA27T~B
D502,503	: SV03Y5
D504	: SG~5L(R)
D701	: DAN202K

DTB143EK DTC114TK 2SC2879
DTC114EK DTC143TK
DTD114EK

2SC1971

2SD1406

2SC3133

UPC7808H

FMA7
FMC2

NJM2904M

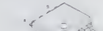

TC9174F

1361

1363

TS-870S PC BOARD VIEWS

AT UNIT (X53-3340-02) (A/2) Component side view

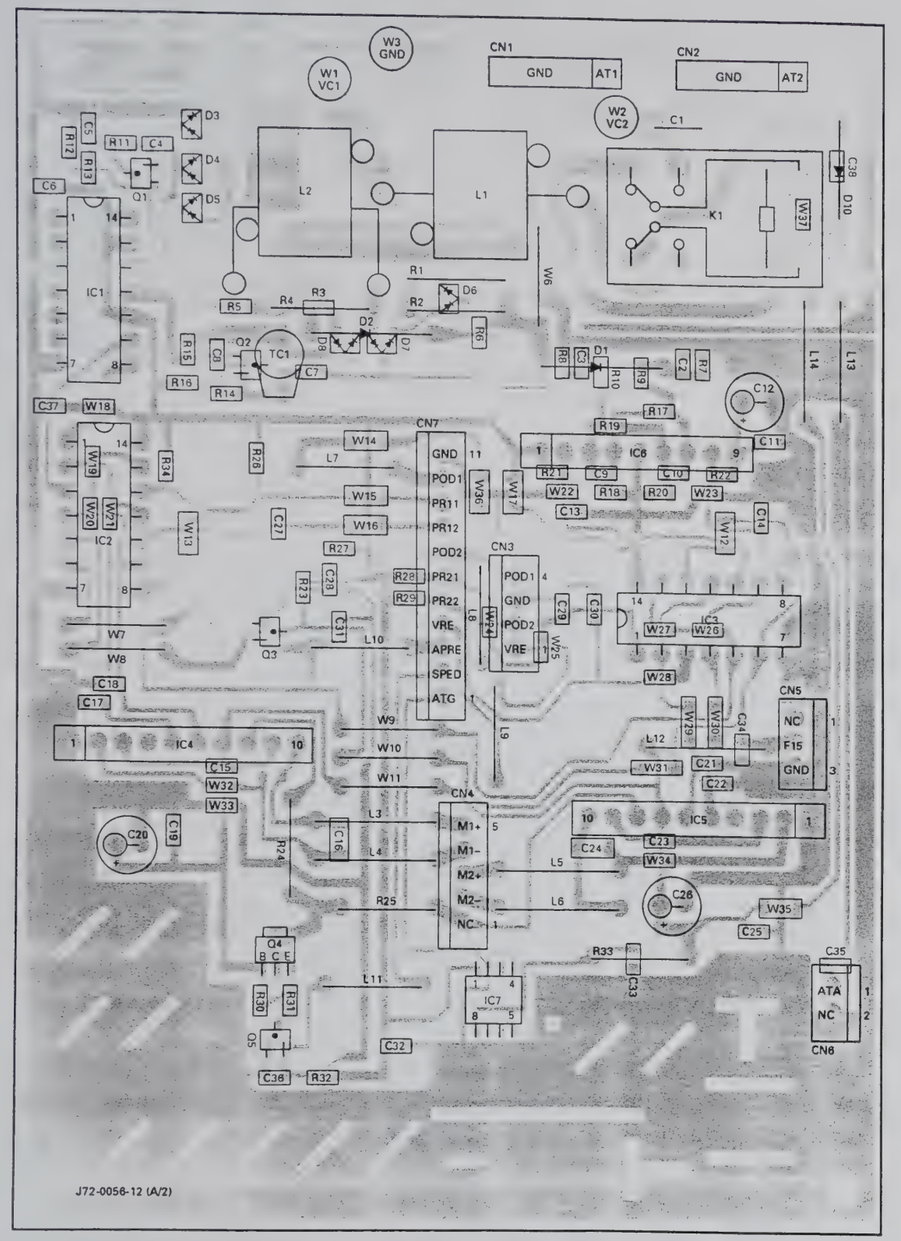

AT UNIT (X53-3340-02) (A/2) Foil side view

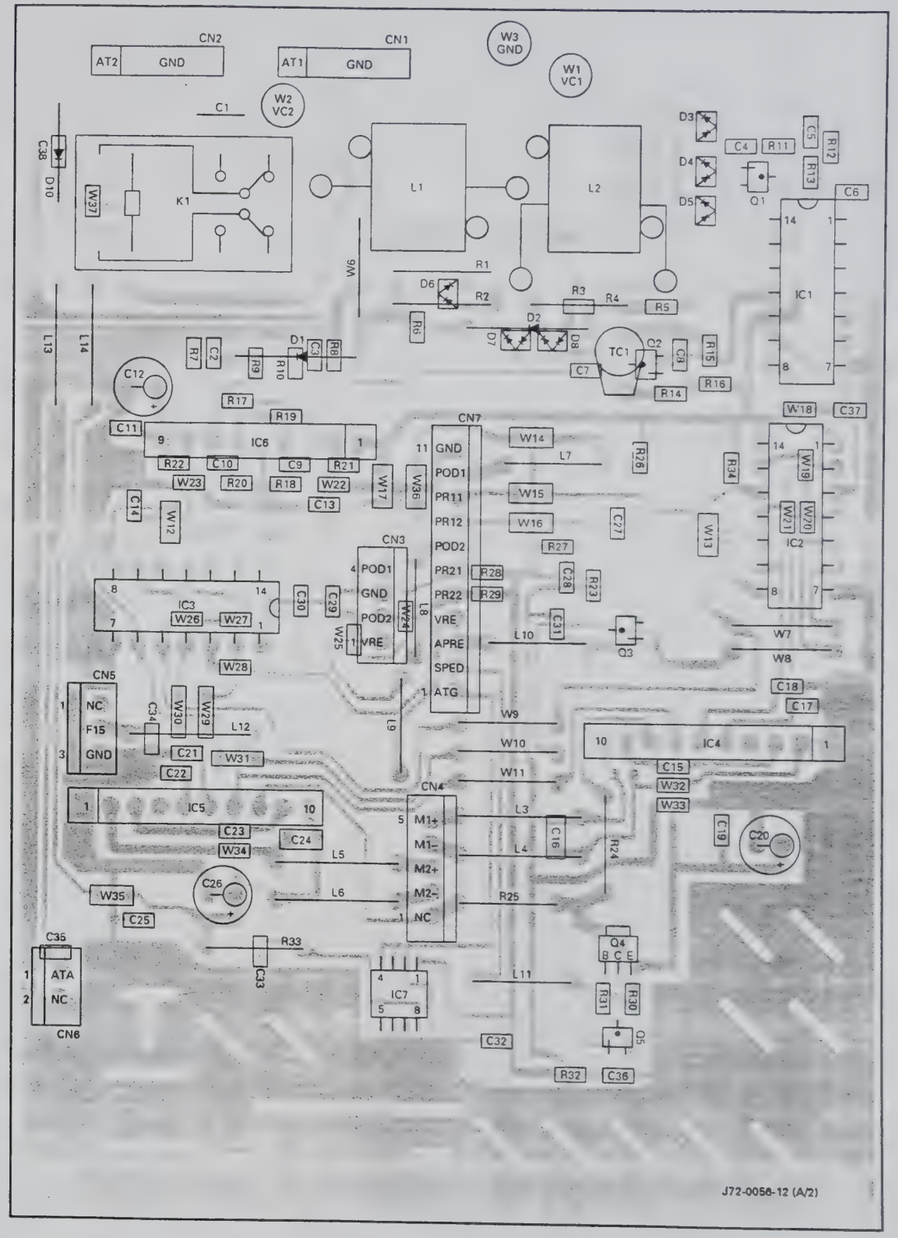

2SC2714
DTC114EK

2SA1204

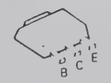

MC78L05M

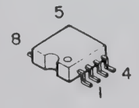

NJM2903S

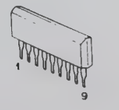

BA6109U2

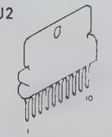

TC4066BP

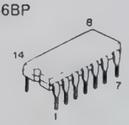

SN74S74N

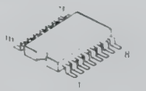

AT UNIT (X53-3340-02) (B/2) Component side view

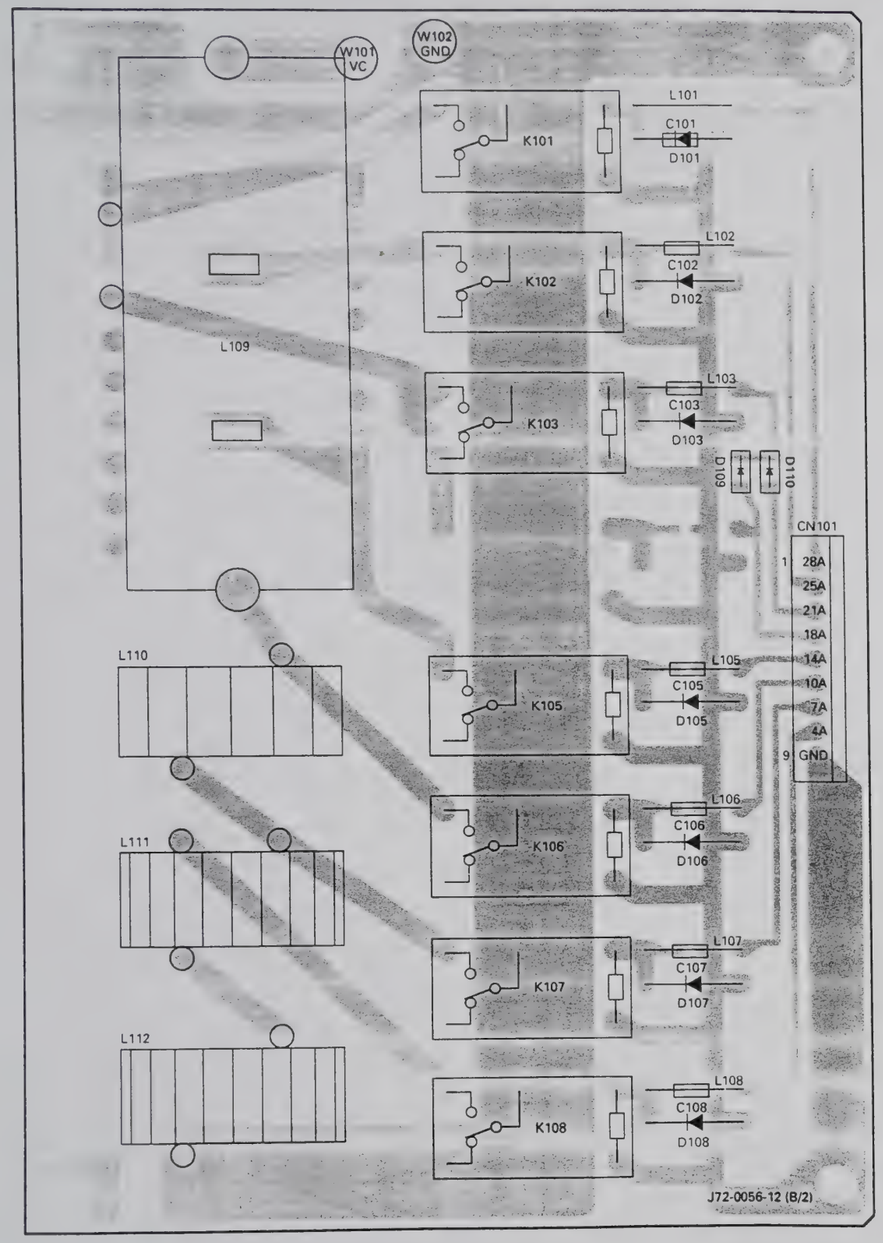

AT UNIT (X53-3340-02) (B/2) Foil side view

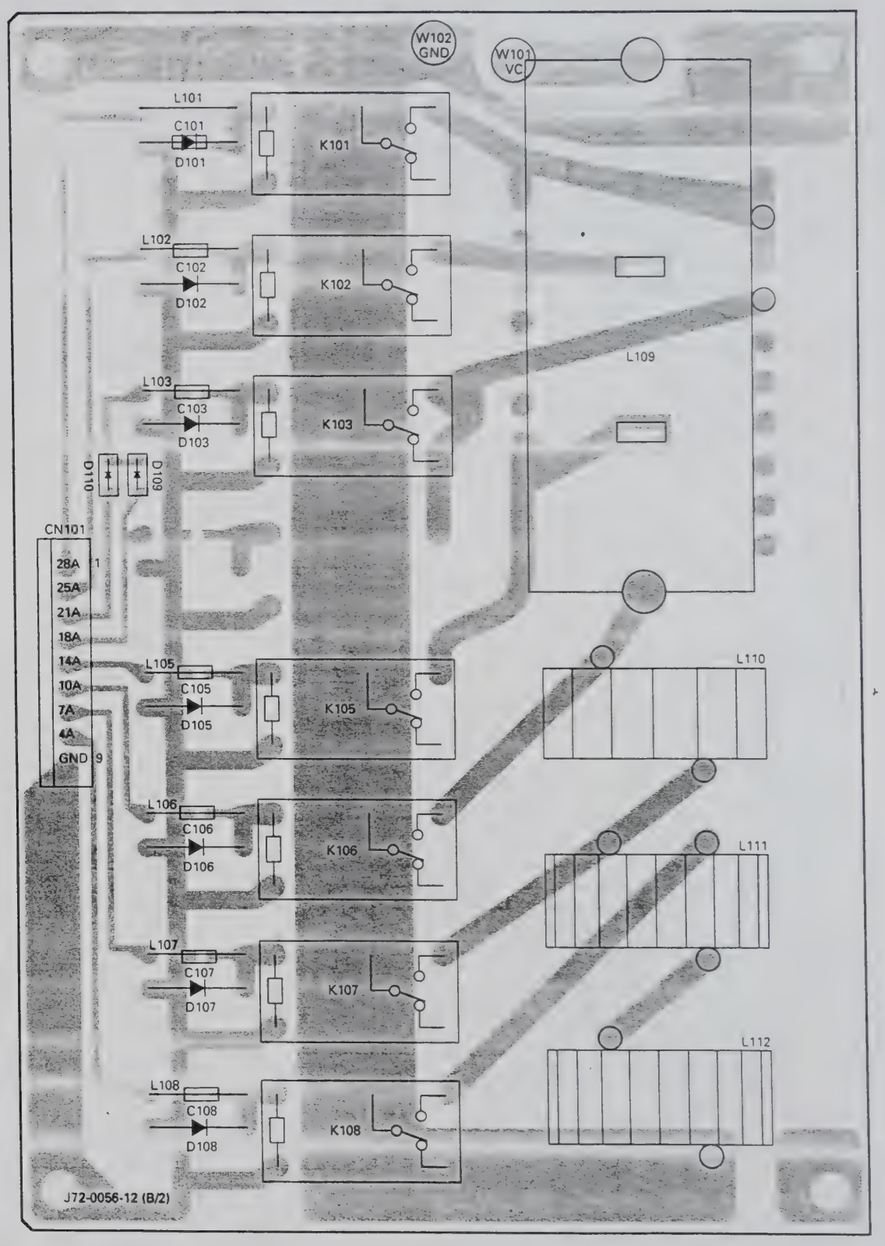

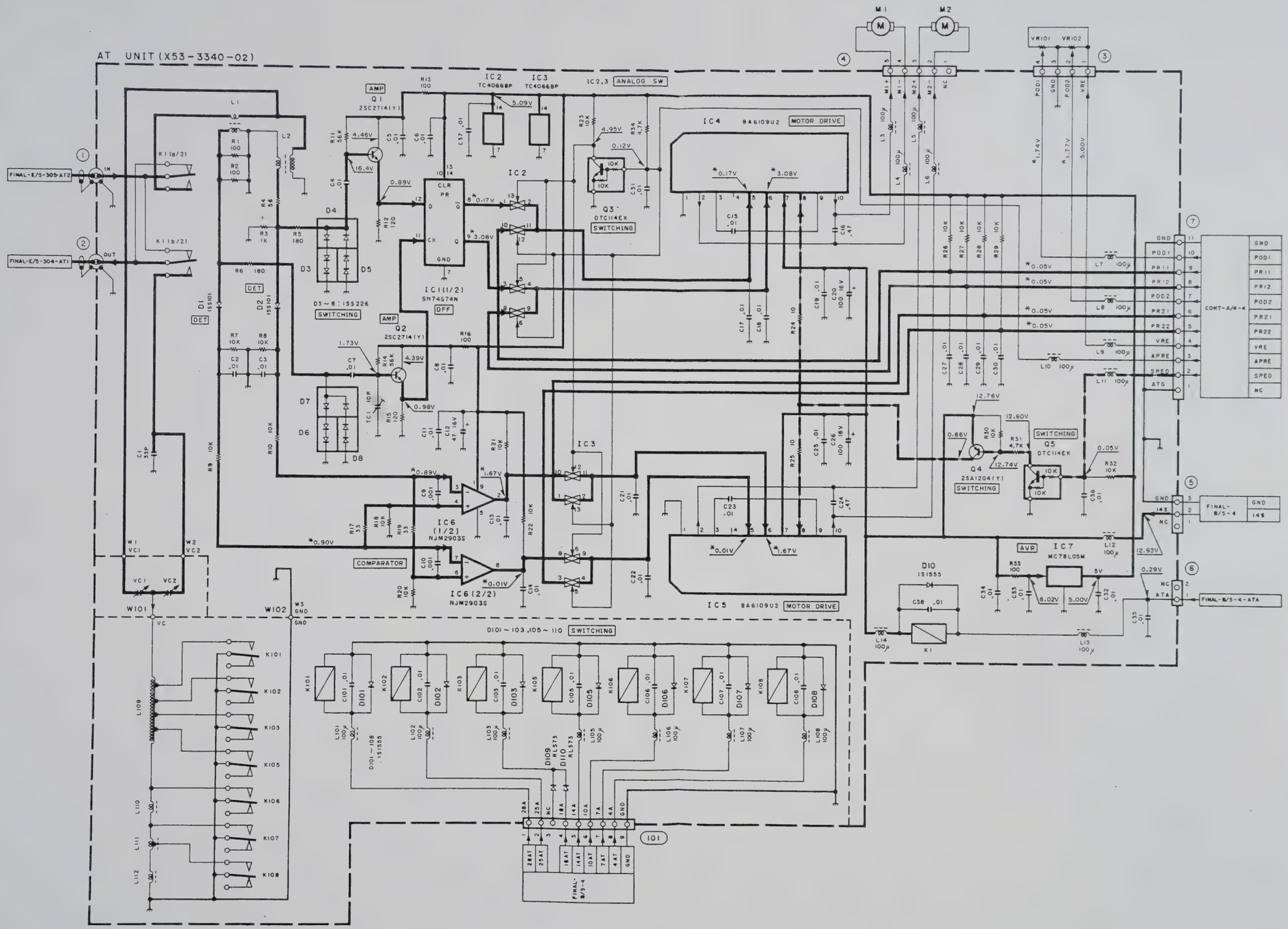
AT UNIT (X53-3340-02)
FINAL-E/5-305-AT2
FINAL-E/5-304-AT1
IN
OUT
K1(a/2)
K1(b/2)
L1
L2
C1 33P
R1 100
R2 100
R3 1K
R4 56
R5 180
R6 180
R7 10K
R8 10K
R9 10K
R10 10K
D1 1SS101
D2 1SS101
DET
D3 ~ 8 : 1SS226
SWITCHING
D4
D5
D6
D7
D8
TC1 10P
Q1 2SC2714(Y)
AMP
Q2 2SC2714(Y)
R11 56K
R12 120
R13 100
R14 56K
R15 120
R16 100
C2 .01
C3 .01
C4 .01
C5 .01
C6 .01
C7 .01
C8 .01
C9 .001
C10 .001
C11 .01
C12 47 16V
C13 .01
C14 .01
IC1(1/2) SN74S74N
IC2 TC4066BP
IC3 TC4066BP
IC2,3 ANALOG SW
IC6(1/2) NJM2903S
IC6(2/2) NJM2903S
COMPARATOR
R17 33
R18 10K
R19 33
R20 10K
R21 10K
R22 10K
OFF
4.46V
16.4V
0.89V
*0.17V
3.08V
1.73V
4.39V
0.98V
*0.89V
*1.67V
*0.90V
*0.01V
5.09V
R23 10K
R24 47K
4.95V
0.12V
10K
Q3 DTC114EK
SWITCHING
IC4 BA6109U2 MOTOR DRIVE
IC5 BA6109U2 MOTOR DRIVE
*0.17V
*3.08V
C15 .01
C16 .47
C17 .01
C18 .01
R24 10
C19 .01
C20 100 16V
R25 10
C21 .01
C22 .01
C23 .01
C24 .47
C25 .01
C26 100 16V
*0.01V
*1.67V
M1
M2
L3 100μ
L4 100μ
L5 100μ
L6 100μ
VR101
VR102
*1.74V
*1.77V
5.00V
R26 10K
R27 10K
R28 10K
R29 10K
*0.05V
L7 100μ
L8 100μ
L9 100μ
L10 100μ
L11 100μ
C27 .01
C28 .01
C29 .01
C30 .01
GND
POD1
PR11
PR12
POD2
PR21
PR22
VRE
APRE
SPED
ATG
NC
CONT-A/4-4
12.76V
12.60V
0.66V
R30 10K
R31 4.7K
Q4 2SA1204(Y)
SWITCHING
Q5 DTC114EK
SWITCHING
12.74V
0.05V
R32 10K
C36 .01
FINAL-B/5-4
14S
12.93V
0.29V
FINAL-B/5-4-ATA
AVR
IC7 MC78L05M
R33 100
8.02V
5V
5.00V
C32 .01
C34 .01
C35 .01
L12 100μ
L13 100μ
L14 100μ
D10 1S1555
C38 .01
K1
W1 VC1
W2 VC2
W101
W102 W3 GND
VC
GND
L109
L110
L111
L112
K101
K102
K103
K105
K106
K107
K108
D101 ~ 103, 105 ~ 110 SWITCHING
C101 .01
C102 .01
C103 .01
C105 .01
C106 .01
C107 .01
C108 .01
D101
D102
D103
D105
D106
D107
D108
L101 100μ
L102 100μ
L103 100μ
L105 100μ
L106 100μ
L107 100μ
L108 100μ
D101 ~ 108 1S1555
D109 RL573
D110 RL573
28A
25A
NC
18A
14A
10A
7A
4A
GND
101
28AT
25AT
18AT
14AT
10AT
7AT
4AT
GND
FINAL-B/5-4

TS-870S PC BOARD VIEW

CONTROL UNIT (X53-356X-XX) (A/4) : CONTROL Component side view
0-11 : K,P 0-21 : M 0-22 : M2 0-71 : X 2-71 : E 2-72 : E2 2-73 : E3 2-74 : E9

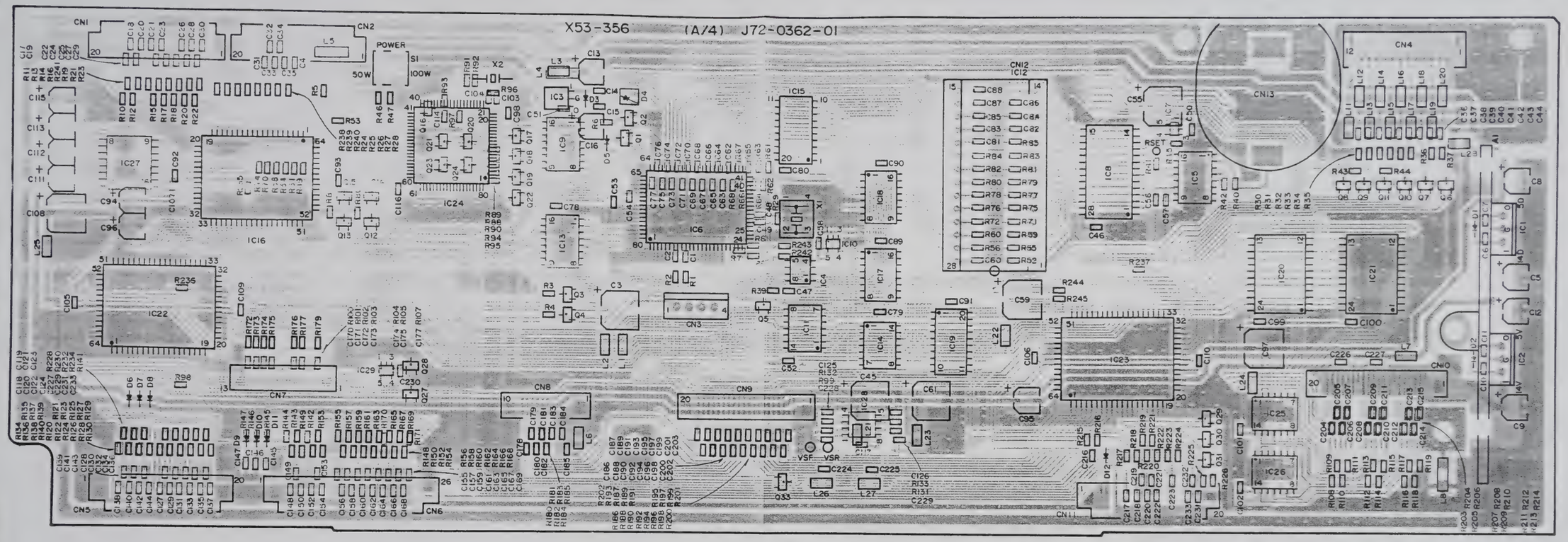

DTA143EK
DTC143EK
DTC114EK
DTC143TK

TA78L08F

UPC7805H

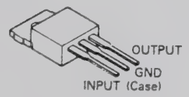

TC7S04F
TC7S32F

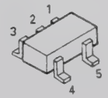

NJM2904M

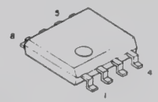

AT2402N10SI2.7

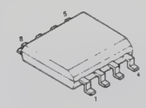

TC74VHC08F
TC74VHC32F

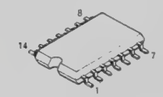

LC3564QMF-10

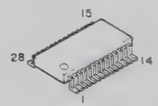

TC4052BF
TC4584BF

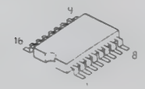

CONTROL UNIT (X53-356X-XX) (A/4) : CONTROL Foil side view
0-11 : K,P 0-21 : M 0-22 : M2 0-71 : X 2-71 : E 2-72 : E2 2-73 : E3 2-74 : E9

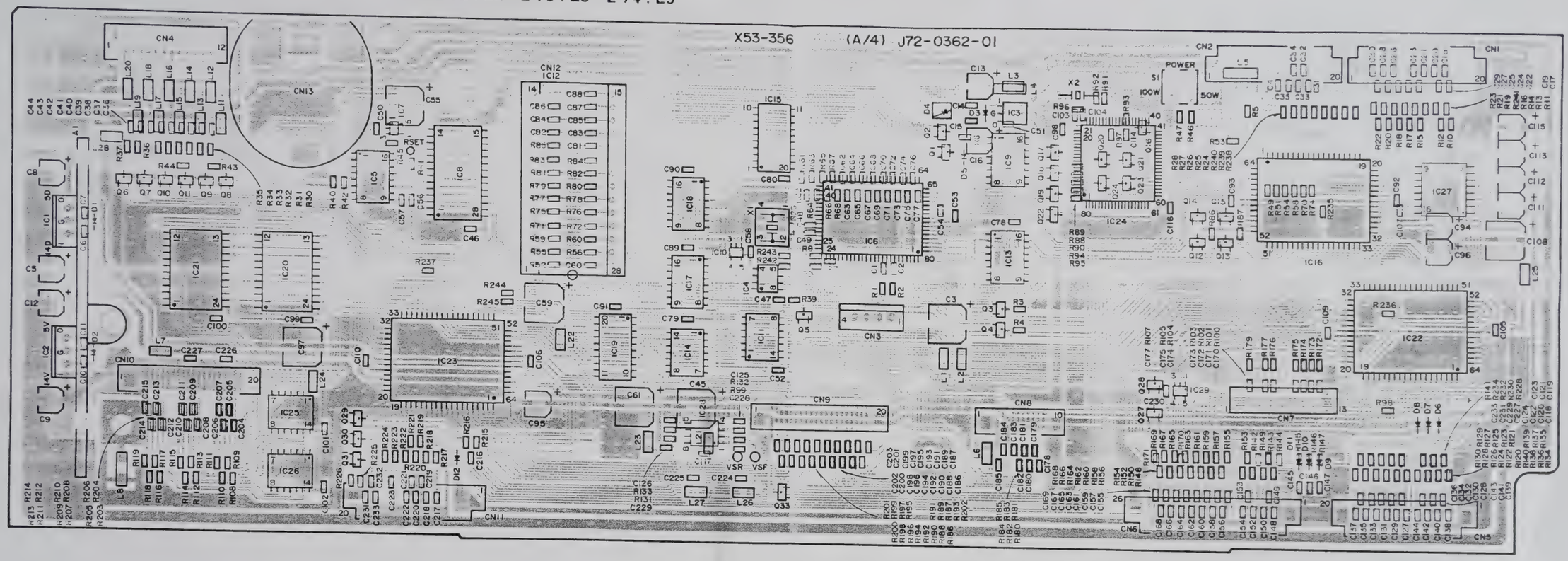

ADM232LAR

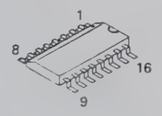

TC74VHC138F

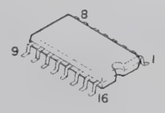

MB3780A
UPD6345GS

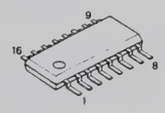

TC74VHC245F
TC74VHC573F

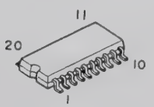

LZ92K371

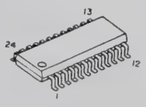

27C512RJLB-K

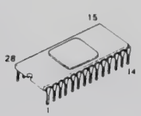

CXD1095Q

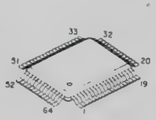

M37702S4BFP

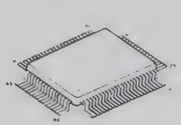

68HC05G2419553

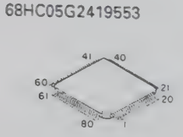

CONTROL UNIT (X53-356X-XX) (B/4) : SW Component side view
0-11 : K,P 0-21 : M 0-22 : M2 0-71 : X 2-71 : E 2-72 : E2 2-73 : E3 2-74 : E9

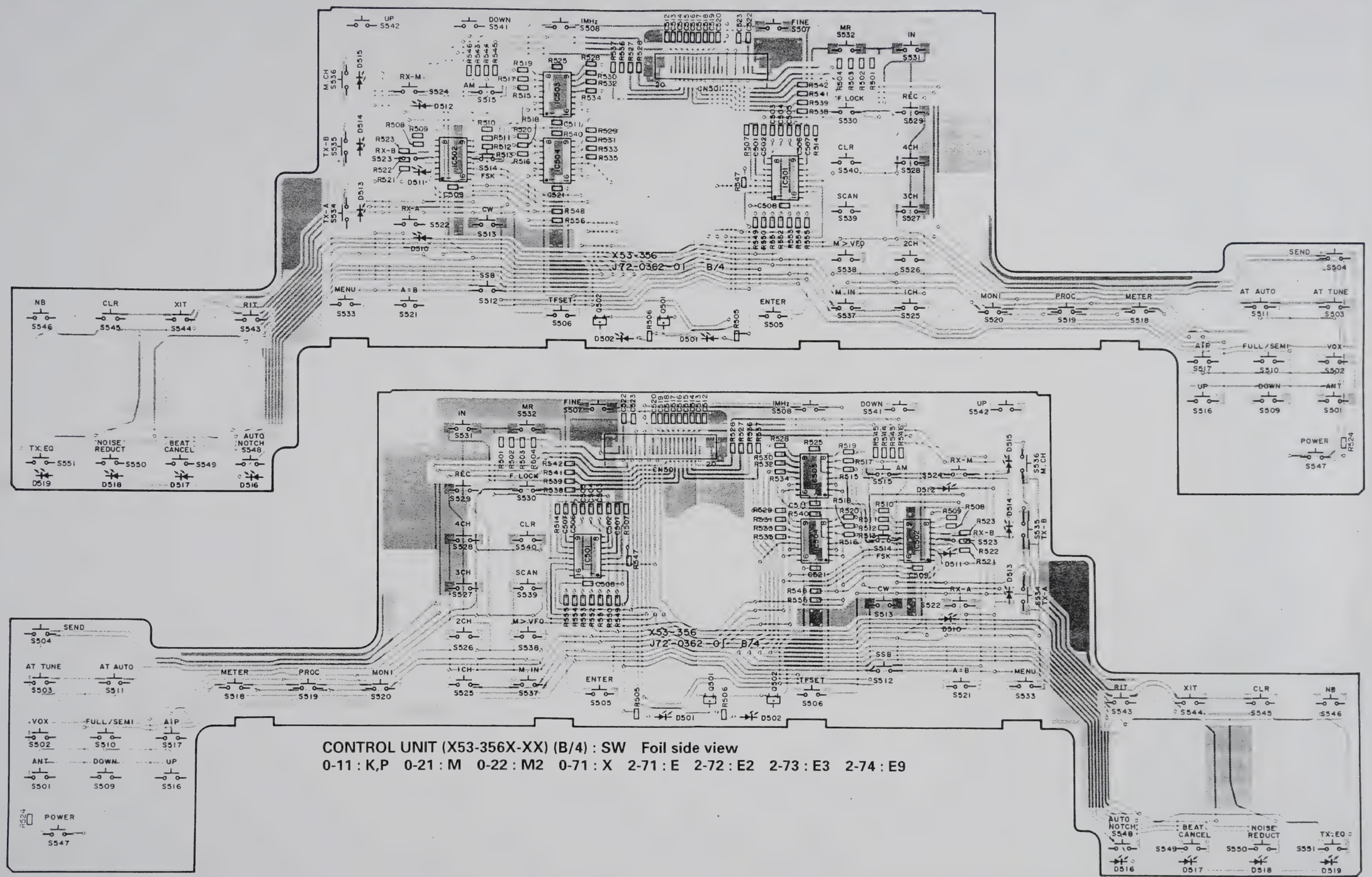

CONTROL UNIT (X53-356X-XX) (B/4) : SW Foil side view
0-11 : K,P 0-21 : M 0-22 : M2 0-71 : X 2-71 : E 2-72 : E2 2-73 : E3 2-74 : E9

TS-870S CIRCUIT DIAGRAM

CONTROL UNIT (X53-356X-XX) (A/4) : CONTROL
0-11 : K,P 0-21 : M 0-22 : M2 0-71 : X 2-71 : E 2-72 : E2 2-73 : E3 2-74 : E9

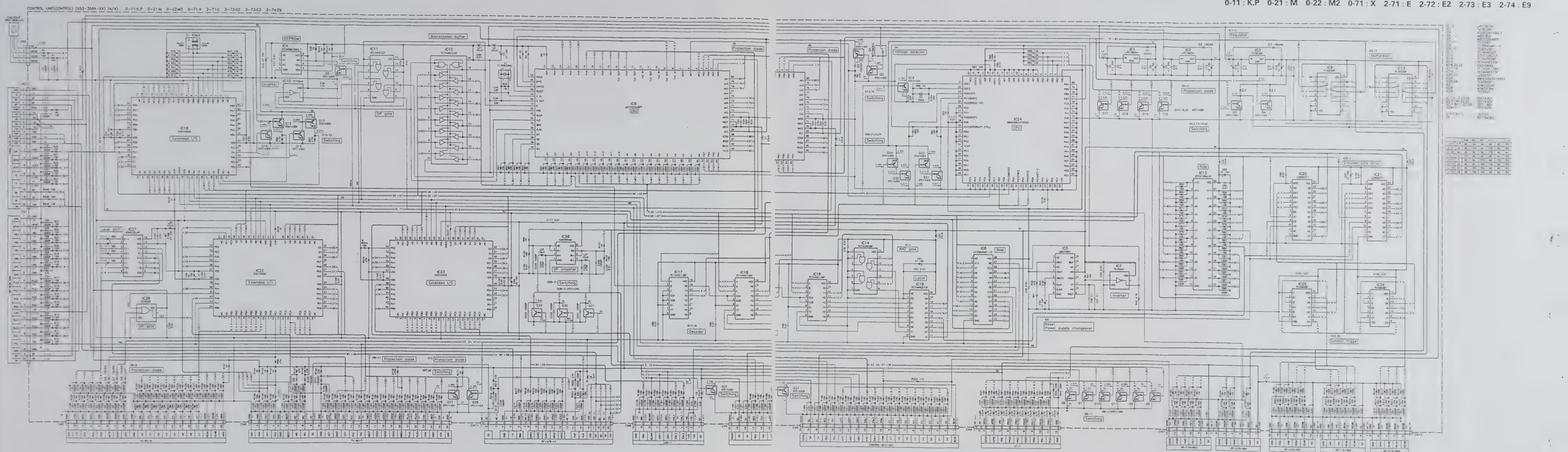

1496

TX-RX UNIT (X57-4620-00) Component side view + Foil side parts

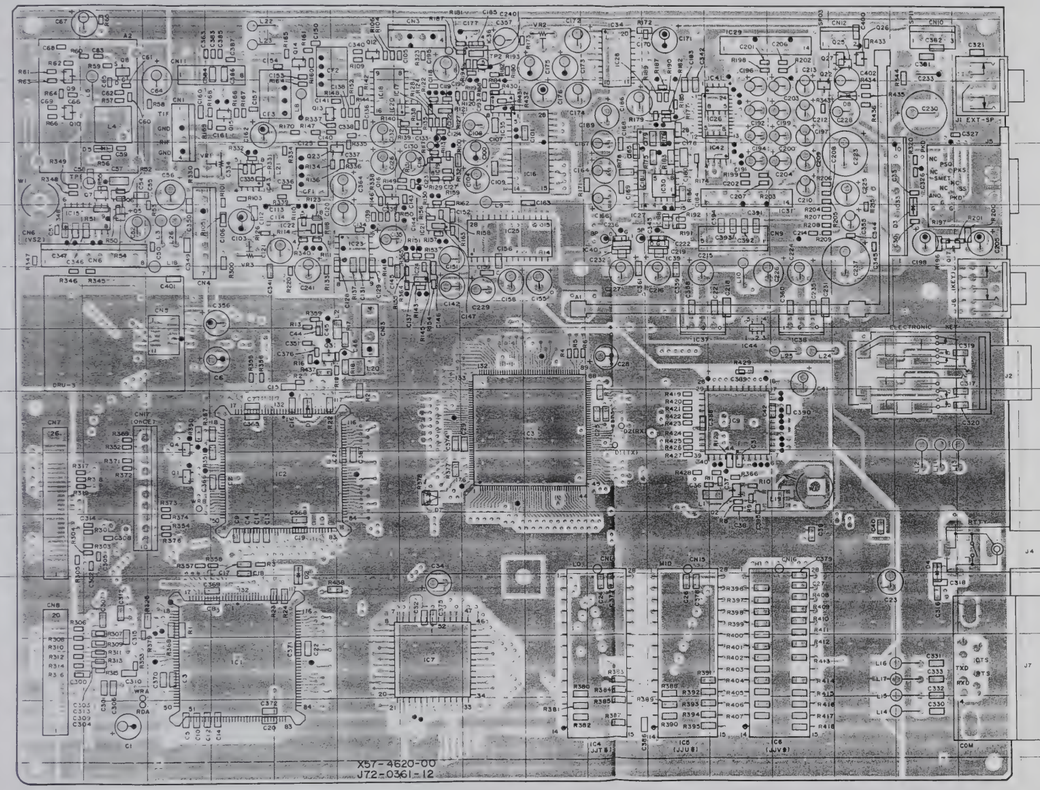

Ref. No	Address	Ref. No	Address
IC1	12X	Q1	9W
IC2	9Y	Q2	9AF
IC3	8AC	Q3	7Y
IC4	13AD	Q4	8W
IC5	13AE	Q5	5V
IC6	13AG	Q6	4V
IC7	12AA	Q7	4V
IC9	8AF	Q8	2V
IC15	5U	Q9	2U
IC16	4AC	Q10	3U
IC17	3AA	Q12	2Z
IC18	3Z	Q13	3Y
IC19	4AA	Q14	2Y
IC20	3AA	Q15	3X
IC21	5AA	Q16	4Z
IC22	5Y	Q17	5AJ
IC23	5Z	Q22	3AH
IC24	6AA	Q23	4Z
IC25	5AB	Q25	2AH
IC26	3AF	Q26	2AH
IC27	4AE	Q27	2AH
IC28	3AE	D1	8Y
IC29	2AF	D2	11Y
IC30	4AE	D3	5AI
IC31	4AF	D4	11AI
IC33	4AI	D5	4V
IC34	2AE	D7	9AA
IC35	3AB	D8	3AH
IC36	2AB		
IC37	7AE		
IC38	7AG		
IC39	5AE		
IC40	5AD		
IC41	3AF		
IC42	4AF		
IC43	4X		
IC44	7AF		

Component side
Pattern 1
Pattern 2
Pattern 3
Pattern 4
Foil side
● Connect 1 and 4

160A

Ref. No	Address
IC17	3M
IC19	4M
IC20	3N
IC21	5M
IC22	5O
IC24	6M
IC28	3I
IC30	4I
IC35	3L
IC36	2L
IC39	5J
IC40	5J
IC41	3I
IC42	4I
IC43	4P
Q3	7O
Q5	5R
Q6	4R
Q7	4R
Q17	5E
Q25	2F
D1	8O
D2	11O
D4	11E
D8	3F

Component side
Pattern 1
Pattern 2
Pattern 3
Pattern 4
Foil side

TX-RX UNIT (X57-4620-00) Foil side view

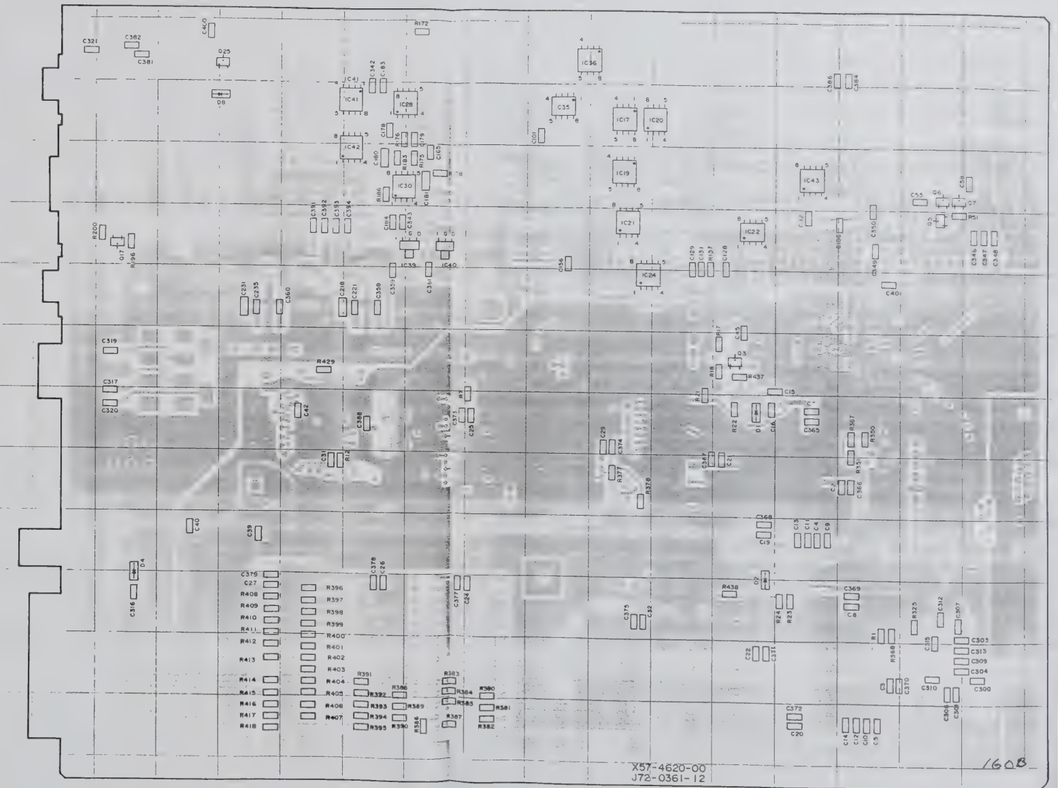

160B

CONTROL UNIT (X53-356X-XX) (B/4) : SW

0-11 : K,P 0-21 : M 0-22 : M2 0-71 : X 2-71 : E 2-72 : E2 2-73 : E3 2-74 : E9

CONTROL UNIT (SW) (X53-356X-XX) (B/4) 0-11:K,P 0-21:M 0-22:M2 0-71:X 2-71:E 2-72:E2 2-73:E3 2-74:E9

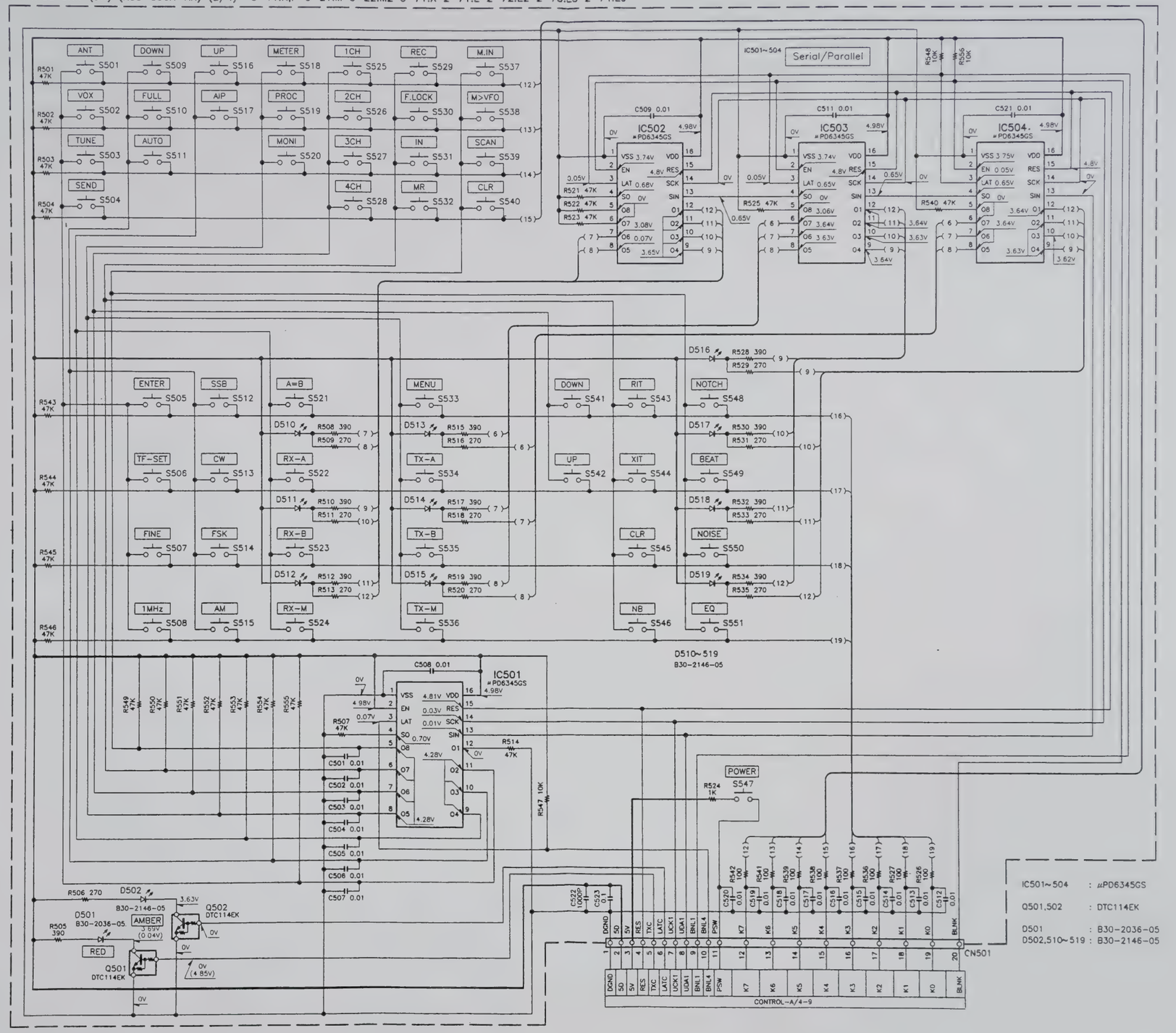

TS-870S PC BOARD VIEW

TX-RX UNIT (X57-4620-00) Component side view

Ref No.	Address
IC1	12G
IC2	9G
IC3	8K
IC4	13L
IC5	13N
IC6	13O
IC7	12J
IC9	8O
IC15	5D
IC16	4K
IC18	3I
IC23	5I
IC25	5K
IC26	3N
IC27	4M
IC29	2O
IC31	4O
IC33	4Q
IC34	2M
IC37	7N
IC38	7P
IC44	7O
Q1	9F
Q2	9O
Q4	9F
Q8	2E
Q9	3D
Q10	3D
Q12	2I
Q13	3H
Q14	2H
Q15	3G
Q16	4I
Q22	3P
Q23	4H
Q26	2Q
Q27	2P
D3	5R
D5	4E
D7	9J

Component side

Pattern 1

Pattern 2

Pattern 3

Pattern 4

Foil side

X57-4620-00
J72-0361-12

TS-870S PC BOARD VIEWS

RF UNIT (X44-3210-00) (D/9)
Component side view

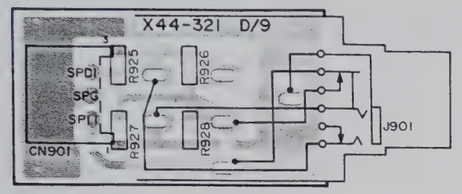

RF UNIT (X44-3210-00) (D/9)
Foil side view

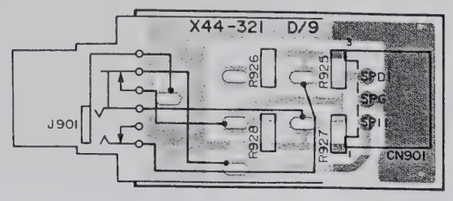

RF UNIT (X44-3210-00) (E/9)
Component side view

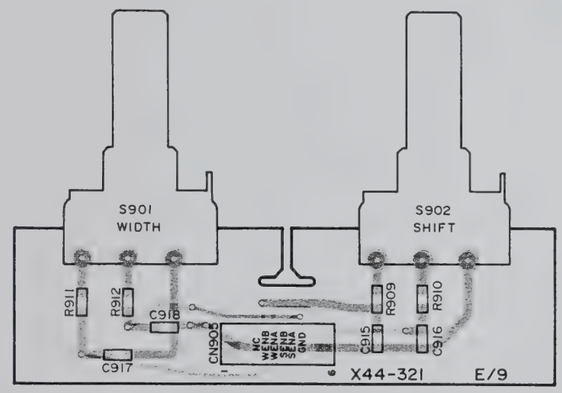

RF UNIT (X44-3210-00) (E/9)
Foil side view

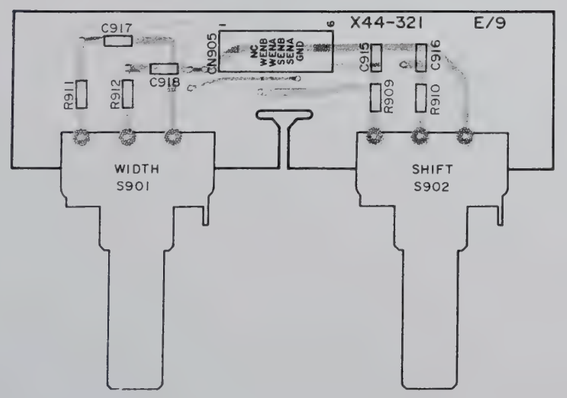

RF UNIT (X44-3210-00) (F/9)
Component side view

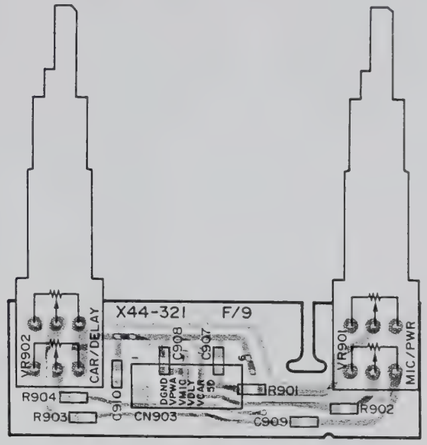

RF UNIT (X44-3210-00) (G/9)
Component side view

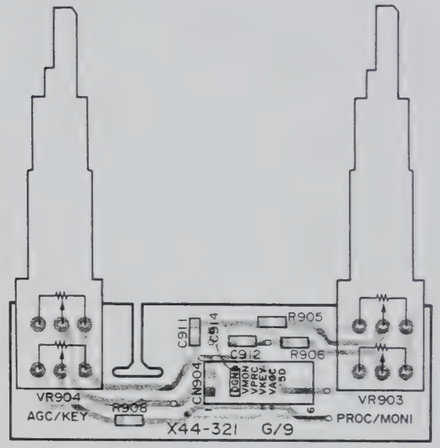

RF UNIT (X44-3210-00) (F/9)
Foil side view

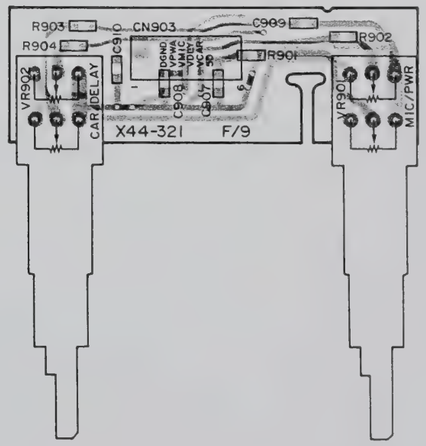

RF UNIT (X44-3210-00) (G/9)
Foil side view

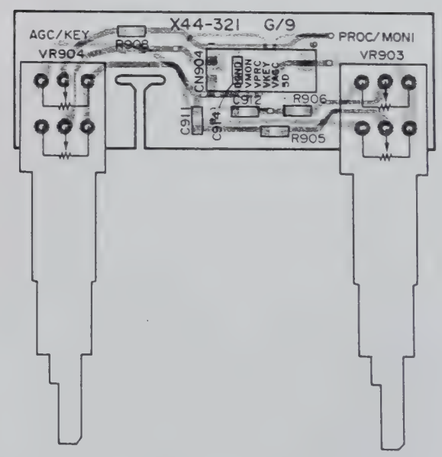

RF UNIT (X44-3210-00) (H/9)
Component side view

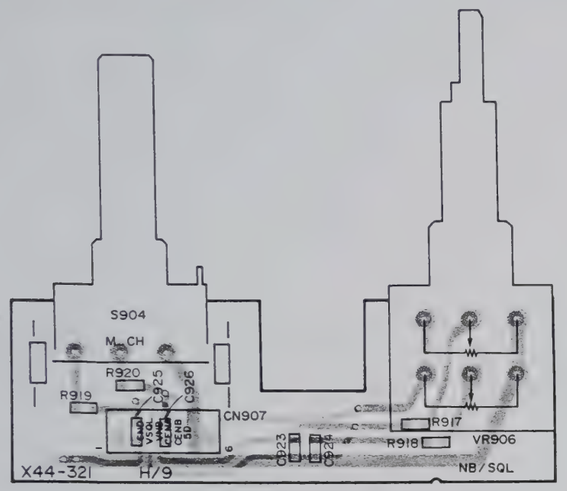

RF UNIT (X44-3210-00) (I/9)
Component side view

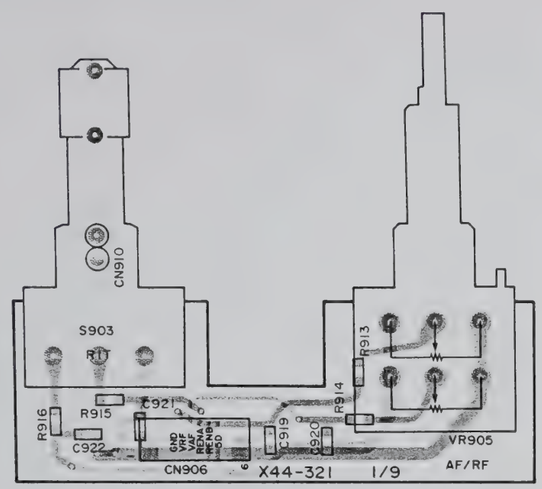

RF UNIT (X44-3210-00) (H/9)
Foil side view

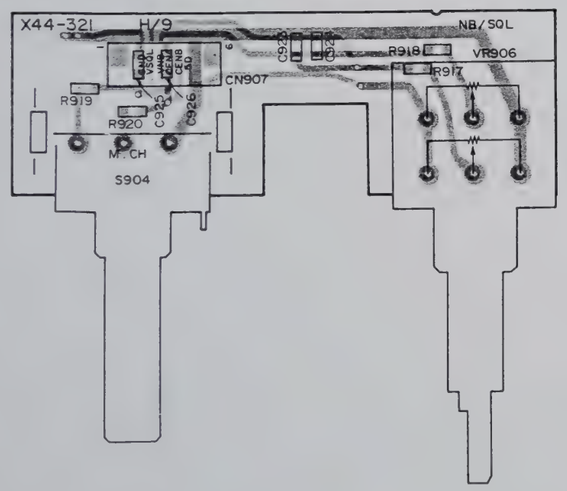

RF UNIT (X44-3210-00) (I/9)
Foil side view

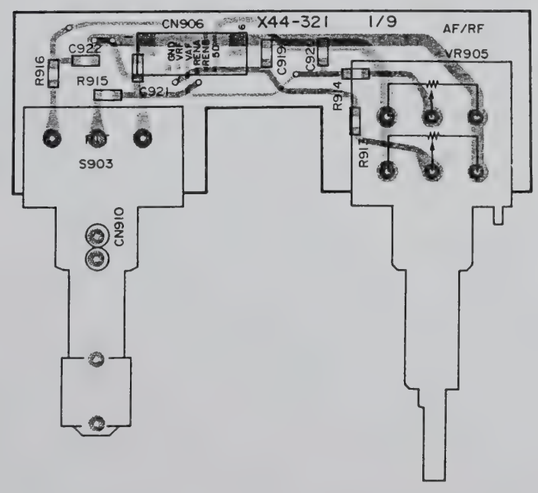

Component side
Foil side

FINAL UNIT (X45-351X-XX) (C/5) : CONNECTION Component side view
0-00 : K,P,M,M2,X 2-71 : E,E2,E3,E9

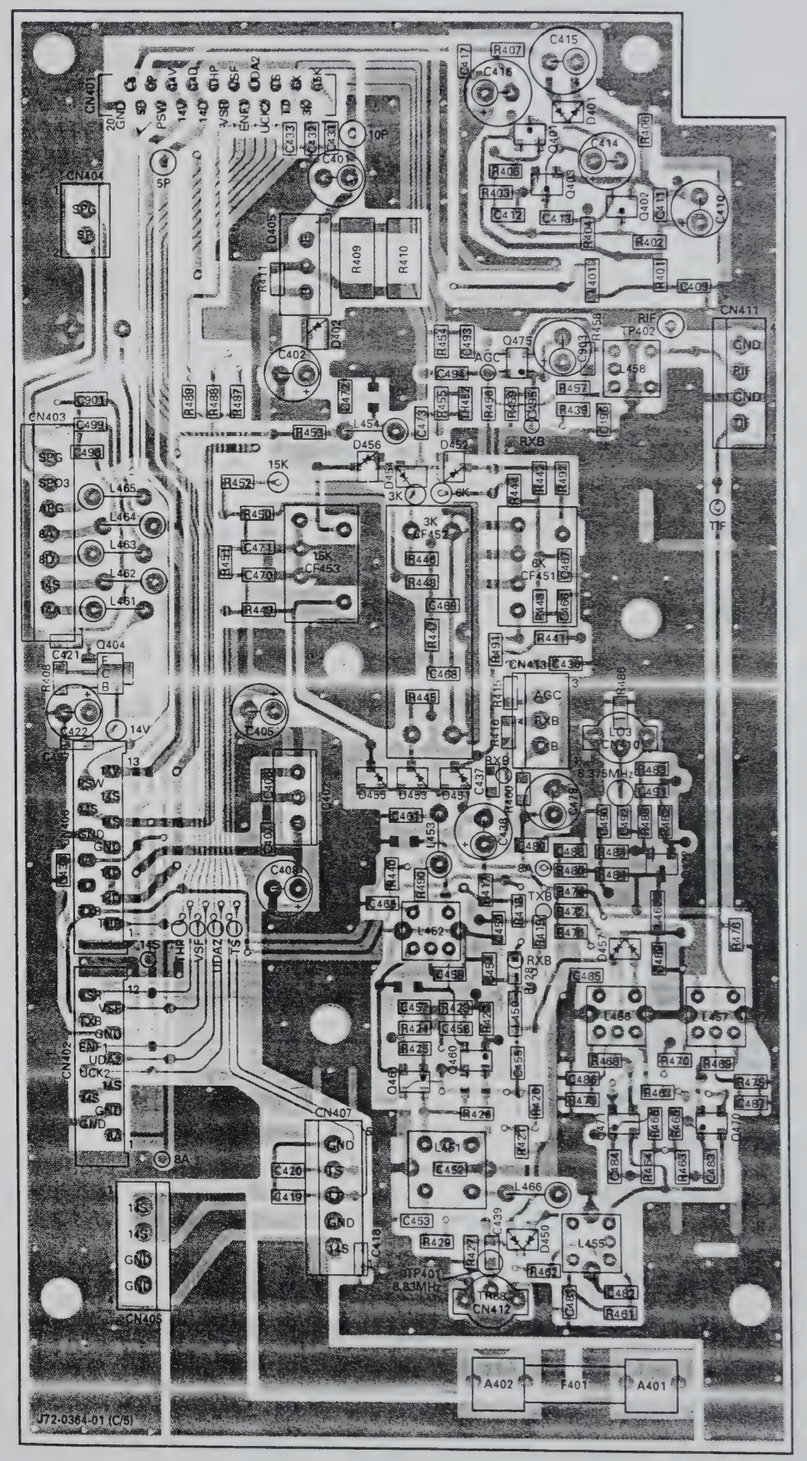

LEVEL DIAGRAM

Receiver Section

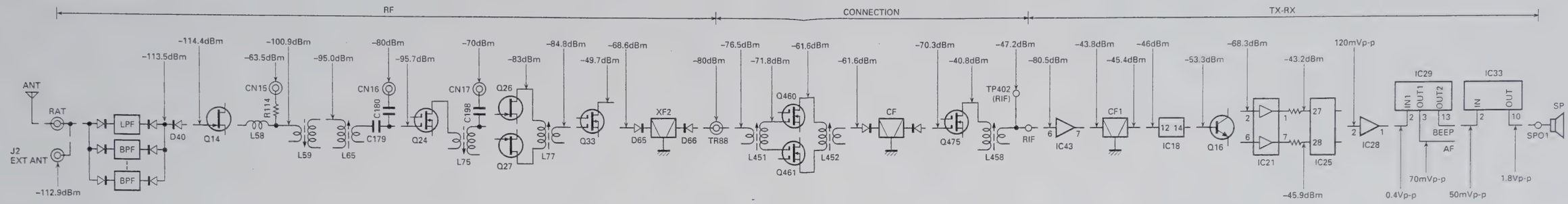

■ Measurement condition

Frequency : 14.2MHz
ANT input : –113dBm
AF output : 0.63V/8Ω, 1kHz

1. The figures shown are signal generator output required for a constant audio output with a constant AF gain control setting. Set the AF gain control for 0.63V/8Ω audio output at –113dBm signal generator input at 14.200MHz.
2. To measure signal generator output connect a 0.01μF capacitor between the signal generator and the check point.
3. AIP : OFF

Transmitter Section

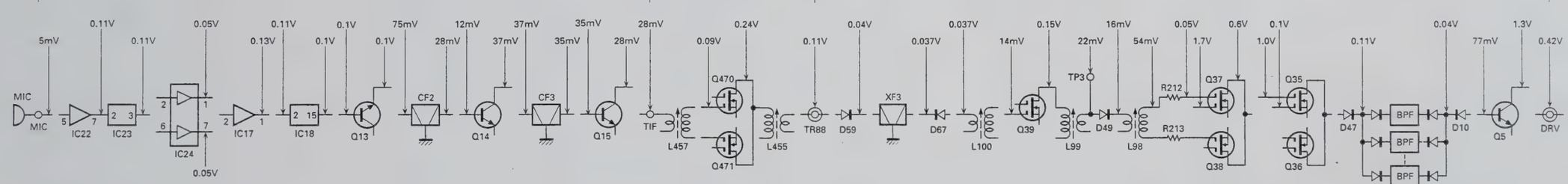

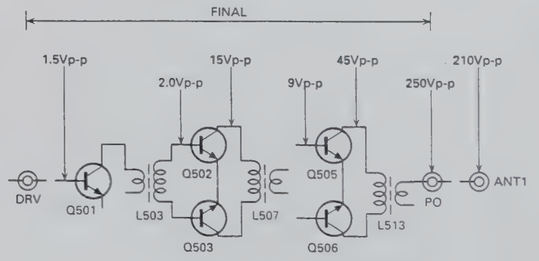

■ Measurement condition

Frequency : 14.2MHz
Output : 100W (ALC zone maximum)
Mode : USB (Low frequency section)
Microphone input : 1kHz, 5mV (Low frequency section)

1. High frequency section is measured by the RF voltmeter in the CW mode.
2. Low frequency section is measured by the AF voltmeter.
3. Final unit section is measured by the oscilloscope.

DRU-3 (DIGITAL RECORDING UNIT)

DRU-3 External View

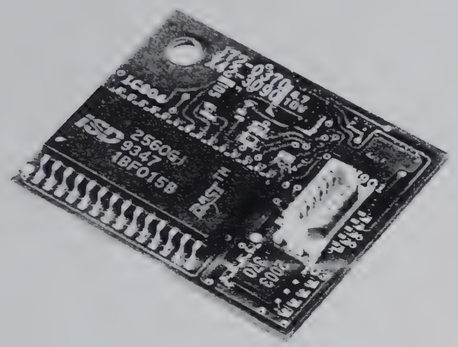

DRU-3 Parts List

Ref. No.	Address	New parts	Parts No.	Description	Destination
ACCESSORY UNIT (X42-3090-20)					
C901,902			CK73FB1H103K	CHIP C 0.010UF K	
C903			CK73FF1E104Z	CHIP C 0.1UF Z	
C905			CK73GB1H103K	CHIP C 0.010UF K	
C906			C92-0004-05	TAN C 1.0UF 16WV	
C907			CK73GB1H102K	CHIP C 1000PF K	
C908			C92-0009-05	TAN C 4.7UF 10WV	
C909			CK73GB1H103K	CHIP C 1000PF K	
CN901		*	E40-5748-05	PIN CONNECTOR (11P)	
R901,902			RK73GB1J103J	CHIP R 10K J 1/16W	
R903			RK73GB1J223J	CHIP R 22K J 1/16W	
R904			RK73GB1J103J	CHIP R 10K J 1/16W	
R905			RK73GB1J474J	CHIP R 470K J 1/16W	
R906,907			RK73GB1J103J	CHIP R 10K J 1/16W	
R908			R92-1252-05	CHIP R 0 OHM	
IC901,902			MB88306PF	IC	
IC903			M62003FP	IC	
IC904		*	ISD2560GI	IC	
IC905		*	TC74HC112AF	IC	

DRU-3 PC Board Views

Component side view

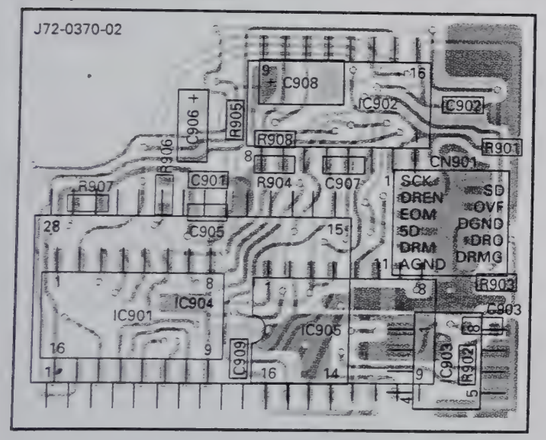

Foil side view

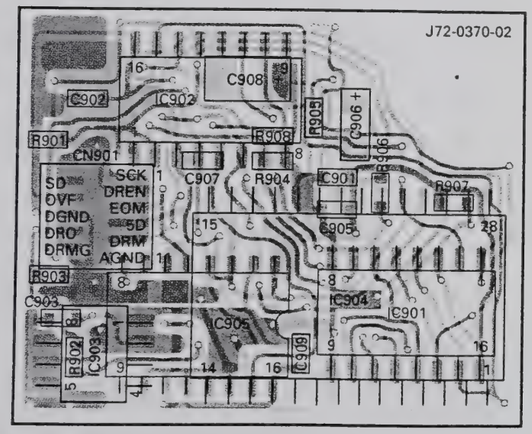

Component side
Foil side

TS-870S

DRU-3 (DIGITAL RECORDING UNIT)

Overview

The DRU-3 is an optional digital audio recording/playback unit for the TS-870S. It has the following features.

- Record transmit tone (main unit MIC input)
- Playback recording from the speaker or output as transmit modulation signal

Operation

■ Recording transmit tone (MIC input)

The microphone input signal from the DRM pin is input to IC904 (ISD2560GI) and recorded. The timing of each port is as follows.

The input address is set by pins 1 (A0) to 10 (A9) of IC904 (ISD2560GI). When pin 27 (P/R) is LOW, the signal is recorded while pin 23 (CE) is LOW.

■ Playback as transmit signal

The record signal is played from pin 14 (SP+) of IC904 (ISD2560GI). The timing of each port is as follows.

The playback address is set by pins 1 (A0) to 10 (A9) fo IC904. When pin 27 (P/R) is HIGH, the signal is played back when pin 23 (CE) goes LOW. When playback ends, a LOW pulse is output from pin 25 (EOM). This pulse is latched by IC905 (TC74HC112AF), and pin 5 (1Q) of IC905 is kept HIGH. The microcomputer checks pin 5 of IC905, and pin 15 (1CLR) of IC905 is made LOW by the IC902 serial-to-parallel converter. Pin 5 of IC905 goes LOW and processing ends.

Recording transmit tone (MIC input)

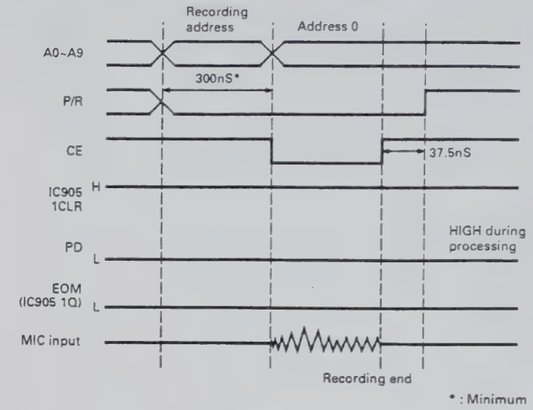

Playback as transmit signal

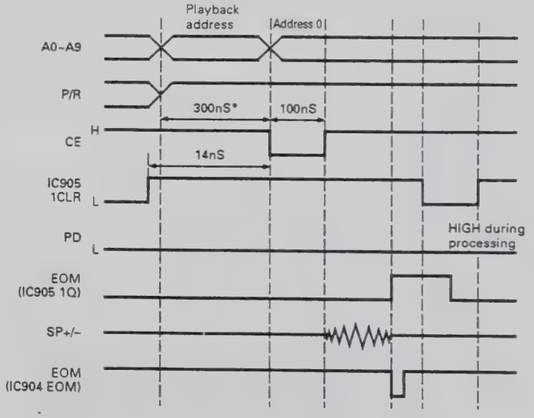

Timing waveform

I/O Map (IC904: ISD2560GI)

Pin No.	Port name	Pin name	I/O	Function	AL (active level)	Initial state
1~10	A0~A9		I	Address input		
11	AUX			Unused		
12	Vssd		I	Digital ground		
13	Vssa		I	Analog ground		
14	SP+	DRO	O	Speaker analog output		
15	SP–			Unused		
16	Vcca		I	5 V		
17	MIC	DRM	I	Analog microphone input		
18	Mref	DRMG	I	Microphone reference		
19	AGC		I			
20	ANAin		I			
21	ANAout		O			
22	OVF		O	Overflow signal output	L	H
23	CE		I		L	H
24	PD		I	Interrupt processing	L	H
25	EON		O	End of Message output	L	H
26	Xclk		I	Unused		
27	P/R		I	Playback/record control signal "L" : Playback, "H" : Record.		
28	Vccd		I	5V		

CIRCUIT DESCRIPTION

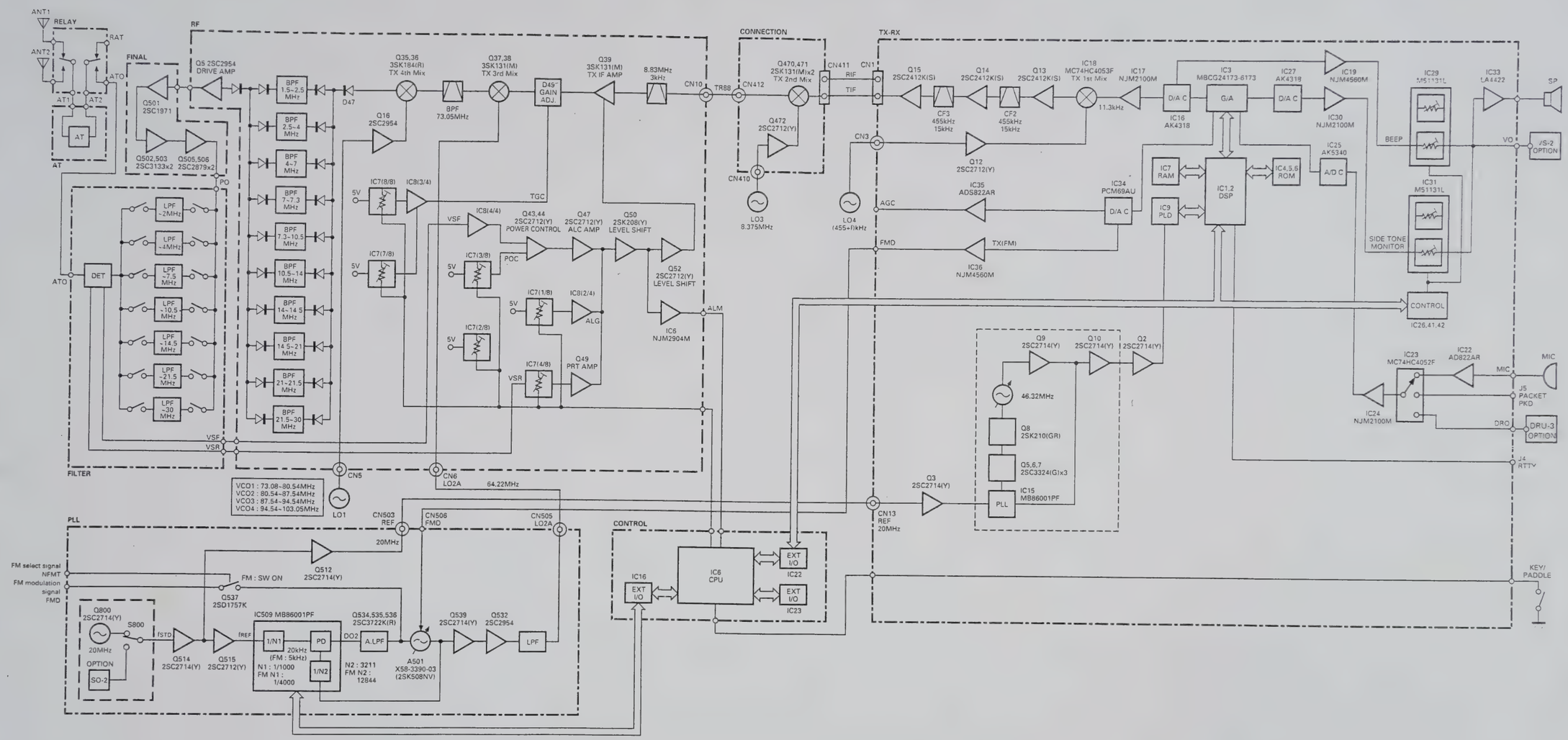

Fig. 7 Transmitter block diagram

CIRCUIT DESCRIPTION

■ Various control circuits by the digital to analog converter

The circuits whose signal levels were varied with volume controls or adjusted with semi-fixed volumes can be controlled with a microcomputer by using an 8-channel digital to analog converter.

The digital-to-analog converter (M62363FP) is a ladder-type variable attenuator with 8-channel independent inputs, which is used to output an output voltage by entering a fixed voltage, or is used as for volume by entering the control signals directly. Table 8 lists controls in each channel.

CH No.	PIN No.	Signal name	Control	Output to
1	2	ALG	ALC reference voltage	IC8-5 operational amplifier
2	3	NBV	NB threshold voltage	IC9-5 NB pulse generation circuit
3	10	POC	Power control reference voltage	Q43 ALC circuit differential input section
4	11	PRO	Reflected wave protection adjustment	Q49 protection control circuit
5	14	Unused		
6	15	Unused		
7	22	POVR	Gain correction for power control	IC8-10 TGC circuit
8	23	TXG	Gain correction between bands	IC8-9 TGC circuit

Table 8 digital-to-analog converter control

■ ALC circuit

The TS-870S uses the same control circuit as for the TS-850 as shown in Figure 8. Q43 and Q44 comprise a differential amplifier, and the VSF (forward wave voltage) signal is compared with the IC7-VO3 power control voltage (POC). The POC voltage is controlled by the microprocessor according to the power settings, such as power volume and mode-specific power down.

Q45 is a switch for average power control during AM transmission. In modes other than AM, the ALC is controlled by detecting the peak value, but in AM mode, a control output smoothing circuit is used to control output power with the average power.

In AM mode, the AMB signal and the base of Q46 go HIGH. The collector of Q48 goes HIGH, and about a 20ms pulse is input to the base of Q51 to turn it ON. Since Q45 is still OFF immediately after transmission starts, the ALC is controlled by detecting the peak value. However, average value control is used after about 20ms, and the average output does not change when modulation occurs. If the ALC is controlled by the average value soon after transmission starts, the ALC voltage does not stabilize for awhile and the preset power is exceeded. Thus, the ALC is controlled by detecting the peak value soon after transmission starts.

The differential amplifier output level is converted by Q47, Q50, and Q52, and the gain is controlled by the second gate of the Q39 ALC amplifier.

Q49 controls SWR protection using the adjusted VSR (reflected wave voltage) signal.

The level of the voltage taken from the ALC circuit is converted by IC6 (B/2) and the ALC meter signal is output to the A/D port of the control unit as the ALM signal. The ALC meter is adjusted so that it indicates a value according to the DSP output level set in the adjustment mode.

■ Transmission gain control

If transmission occurs with several bands as with an HF transceiver, the gain changes between bands due to the effects of frequency characteristics of the final unit, low-pass filter, or mixer circuit, and the CAR level must be adjusted each time the band is changed.

This model uses a pin diode variable ATT and microprocessor-controlled digital-to-analog converter to correct the total gain between bands and correct the gain with power control. Thus, the total gain is the same in each band.

TS-870S

CIRCUIT DESCRIPTION

■ CAR control

The CAR volume signal is read by the analog to digital converter and output to the DSP via the microprocessor. The DSP controls the output level required according to the mode. If PROC is OFF in SSB mode and in FM mode, the level is fixed, but in other modes it can be adjusted in the 30-dB range using the CAR control.

The level required for each adjustment is output in the adjustment mode to facilitate adjustment.

■ Final circuit

The drive output from the CN4 of the RF unit is input to CN501 of the final section (X45-351 A/5). The harmonics of the signal amplified to 100W by Q501 to Q505 are attenuated by a low-pass filter in the filter section (X45-351 B/5), and the resulting signal goes to the relay section (X45-351 E/5).

The transmit signal input to the relay section is passed through the transmit/receive switching relay, the through/in relay in the AT unit (X53-3340-02), and the ANT A/B switching relay, and goes to the ANT terminal.

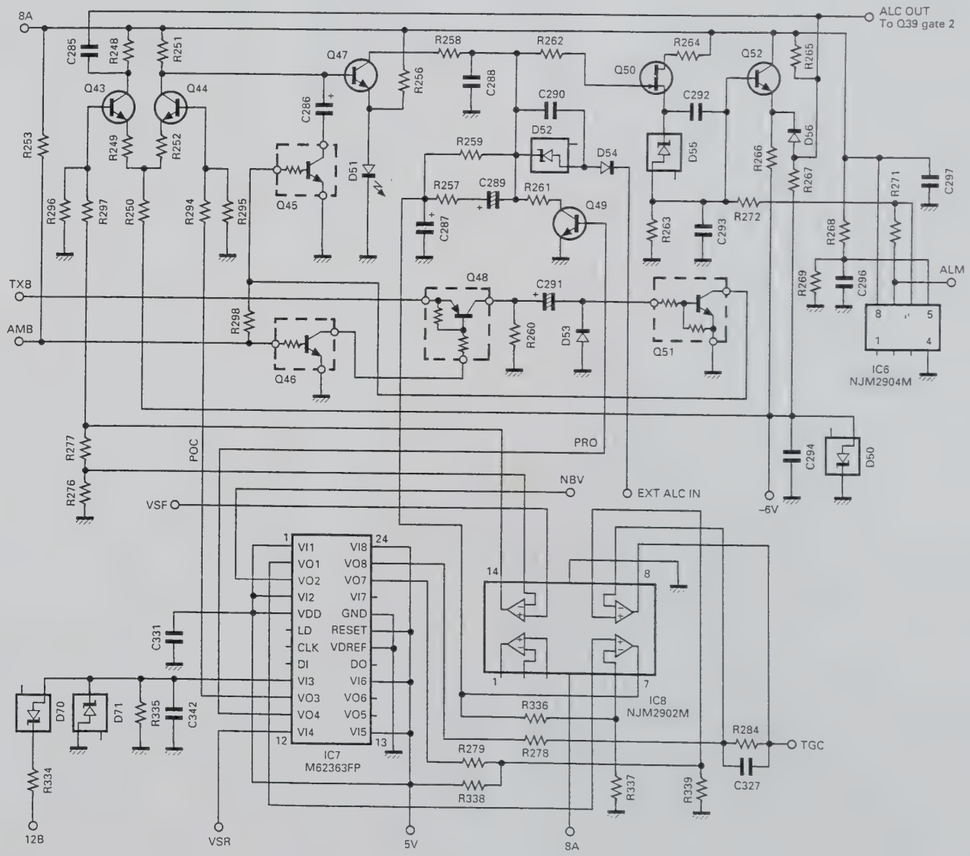

Fig. 8 ALC circuit

EXPLODED VIEW

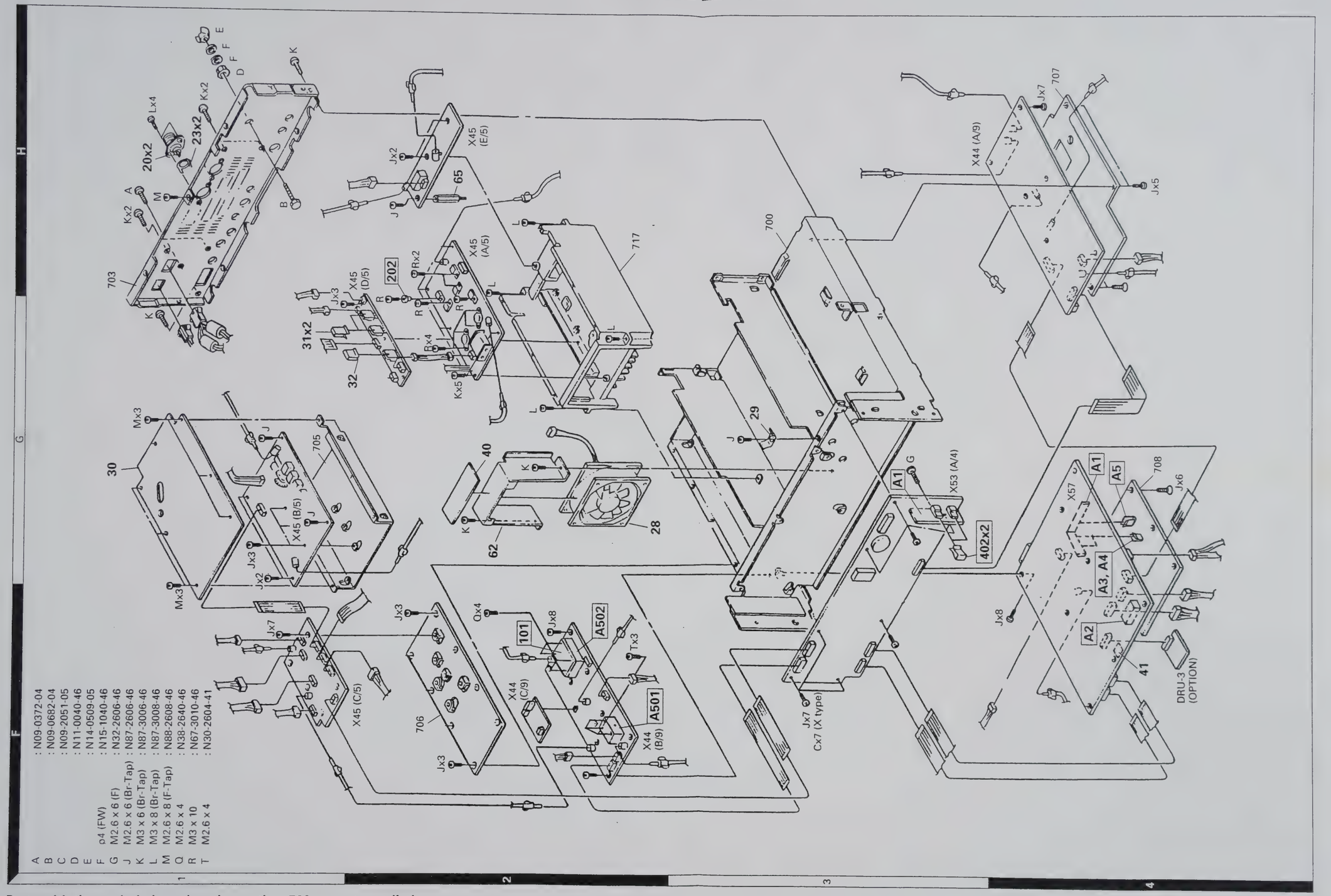

Parts with the exploded numbers larger than 700 are not supplied.

IS-870S IS-870S

EXPLODED VIEW

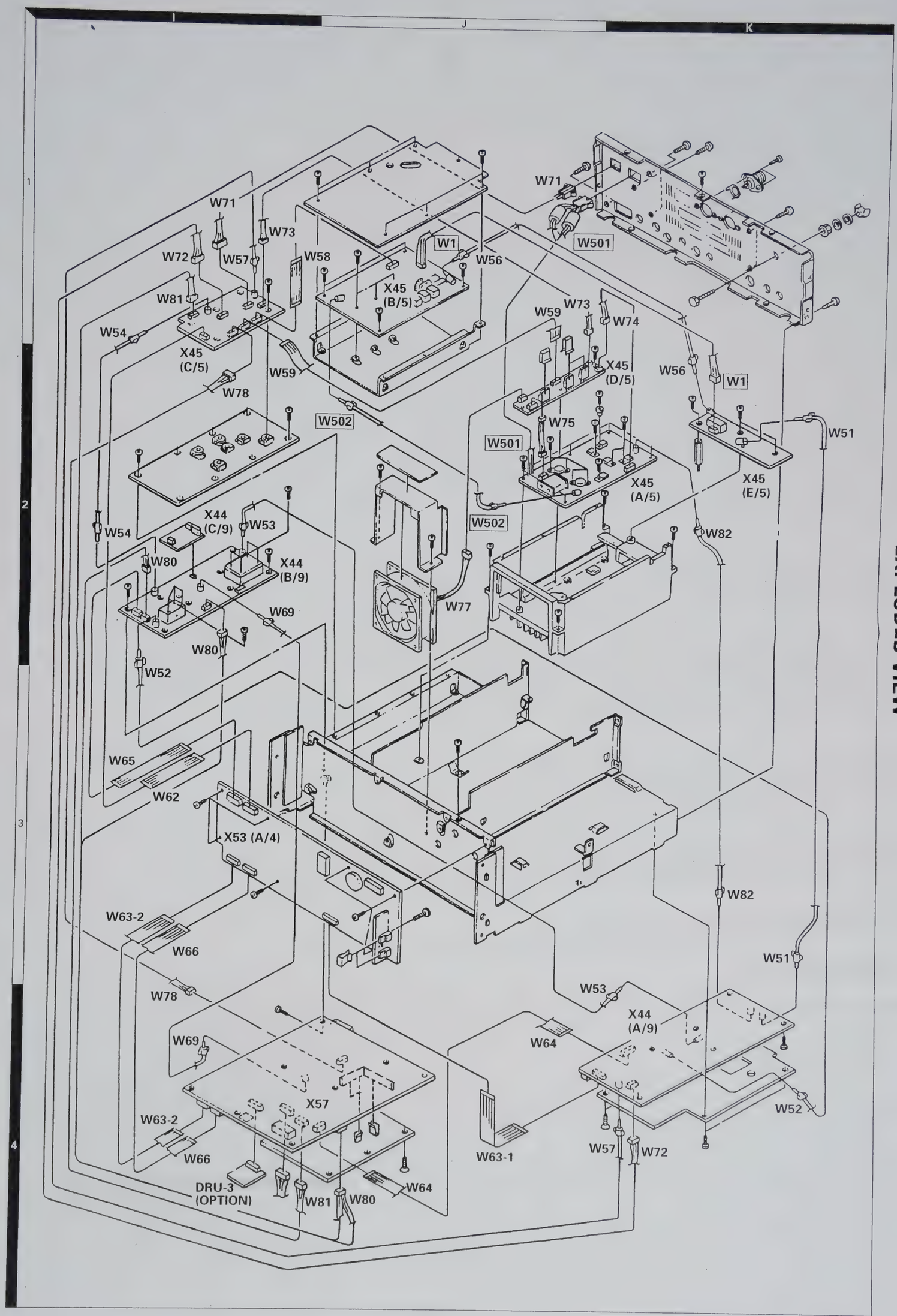

LCD ASSY (B38-0736-05)

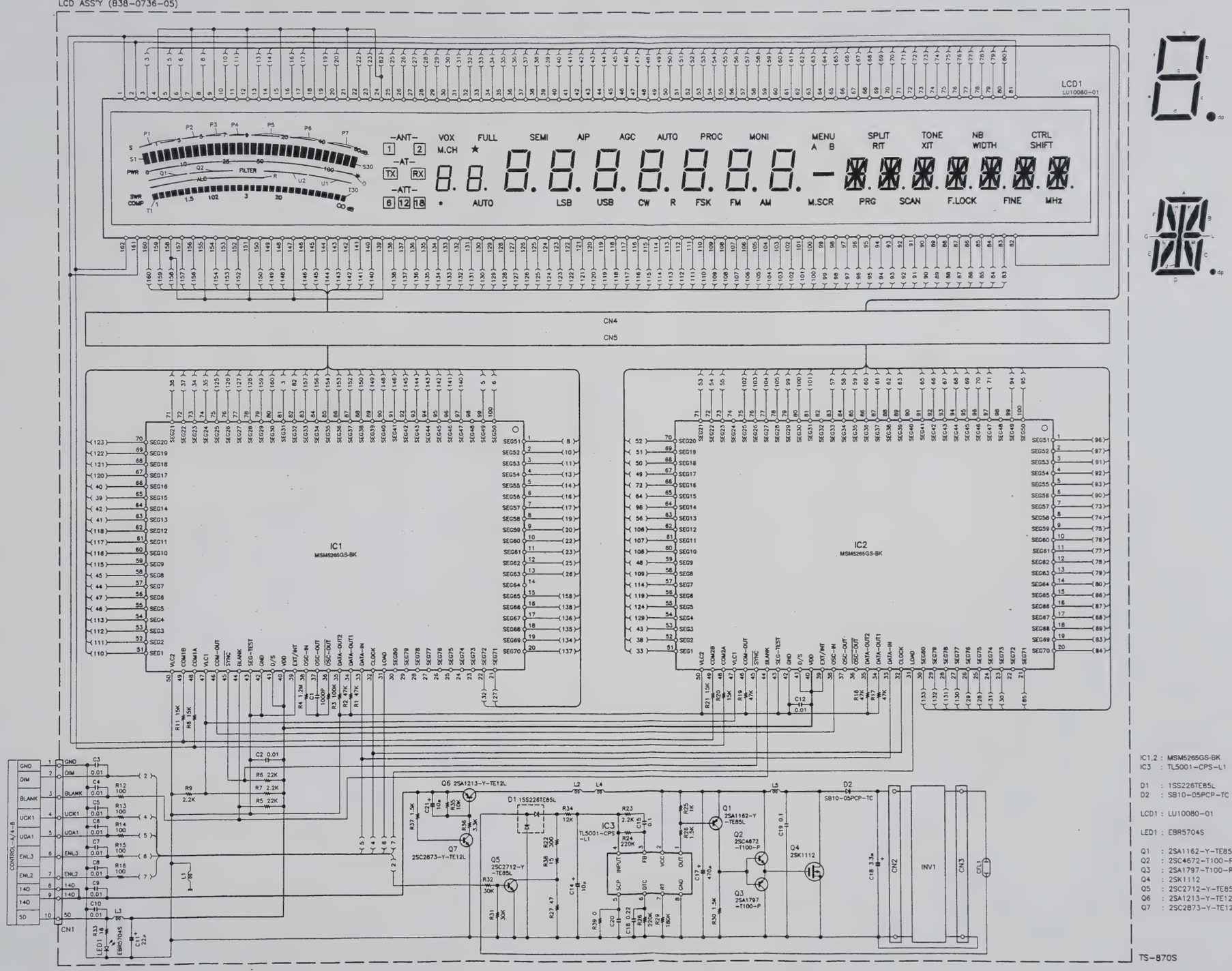

IC1,2 : MSM5265GS-BK
IC3 : TL5001-CPS-L1

D1 : 1SS226TE85L
D2 : SB10-05PCP-TC

LCD1 : LU10080-01

LED1 : EBR5704S

Q1 : 2SA1162-Y-TE85L
Q2 : 2SC4672-T100-P
Q3 : 2SA1797-T100-P
Q4 : 2SK1112
Q5 : 2SC2712-Y-TE85L
Q6 : 2SA1213-Y-TE12L
Q7 : 2SC2873-Y-TE12L

RF UNIT (X44-3210-00) (A/9) : RF Component side view

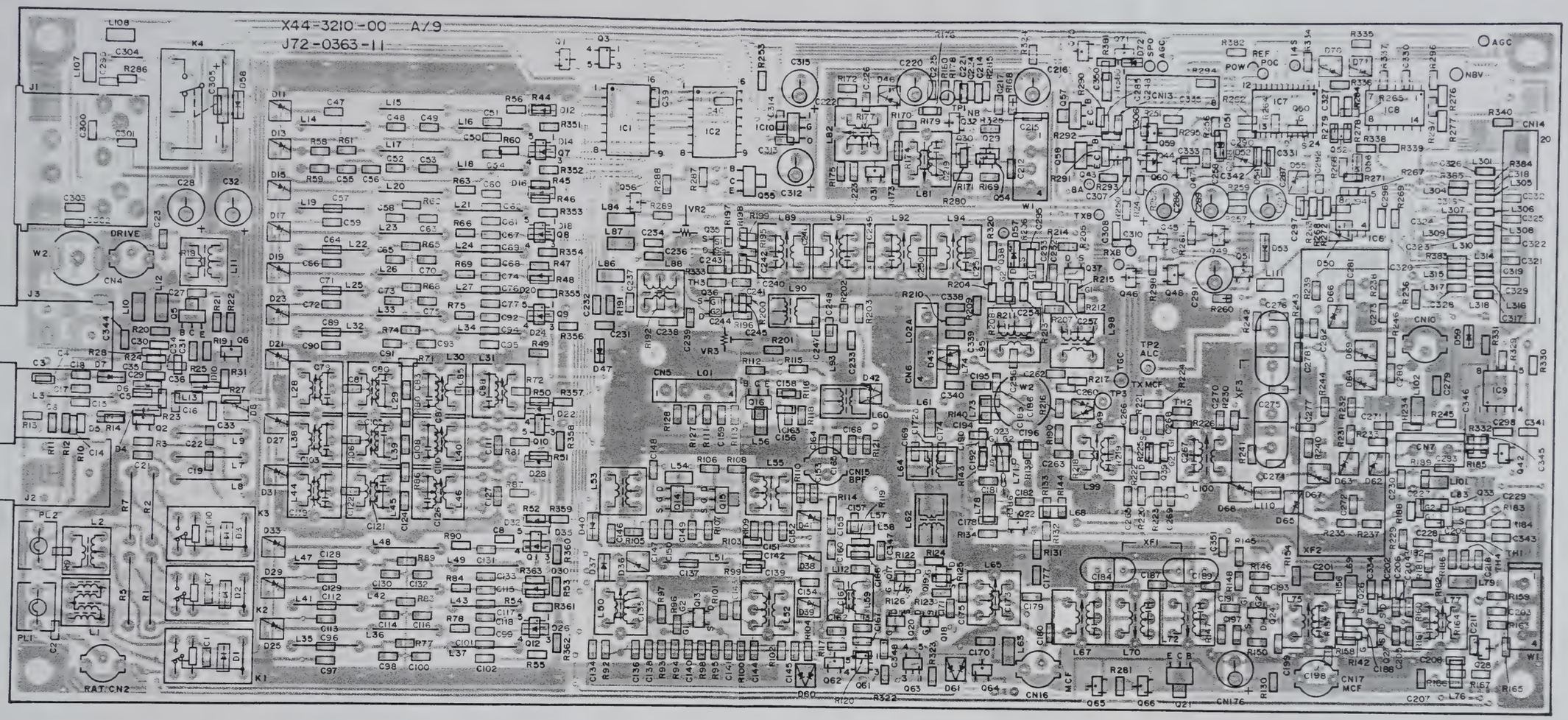

Component side
Foil side

DTA114EK DTC143EK
DTA124EK DTC143TK
DTA143EK 2SA1162
DTC114EK 2SC2712
DTC124EK 2SC2714

2SC2954
2SD1624
2SB1188

2SK2218

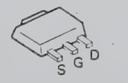

2SK208
2SK520

3SK131
3SK184

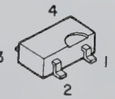

FMA1
FMC3
FMG4

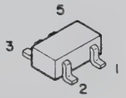

NJM78L05UA

RF UNIT (X44-3210-00) (A/9) : RF Foil side view

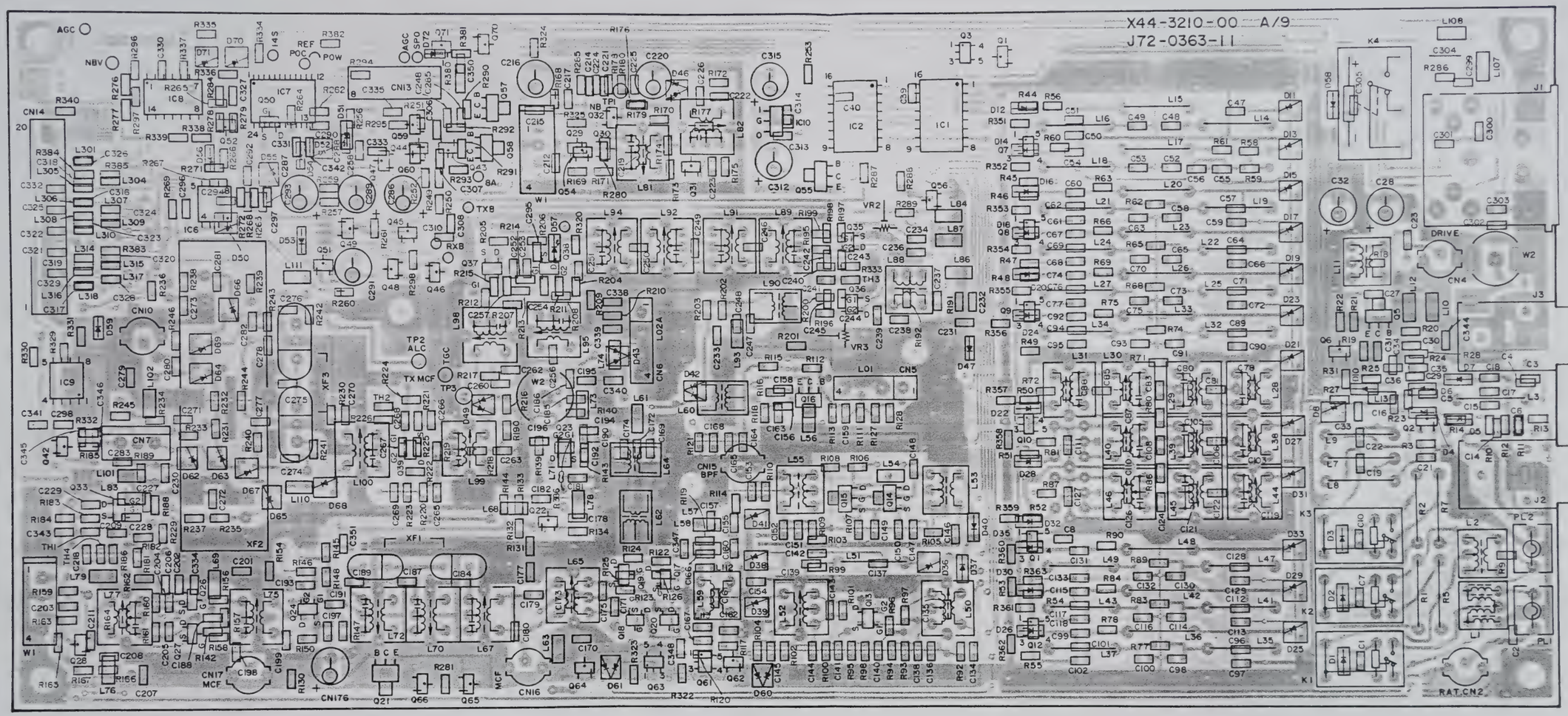

NJM2903M
NJM2904M

NJM2902M

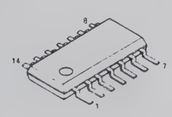

TC9174F

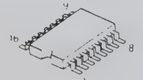

M62363FP

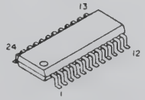

TS-870S PC BOARD VIEWS

RF UNIT (X44-3210-00) (B/9) : PLL Component side view

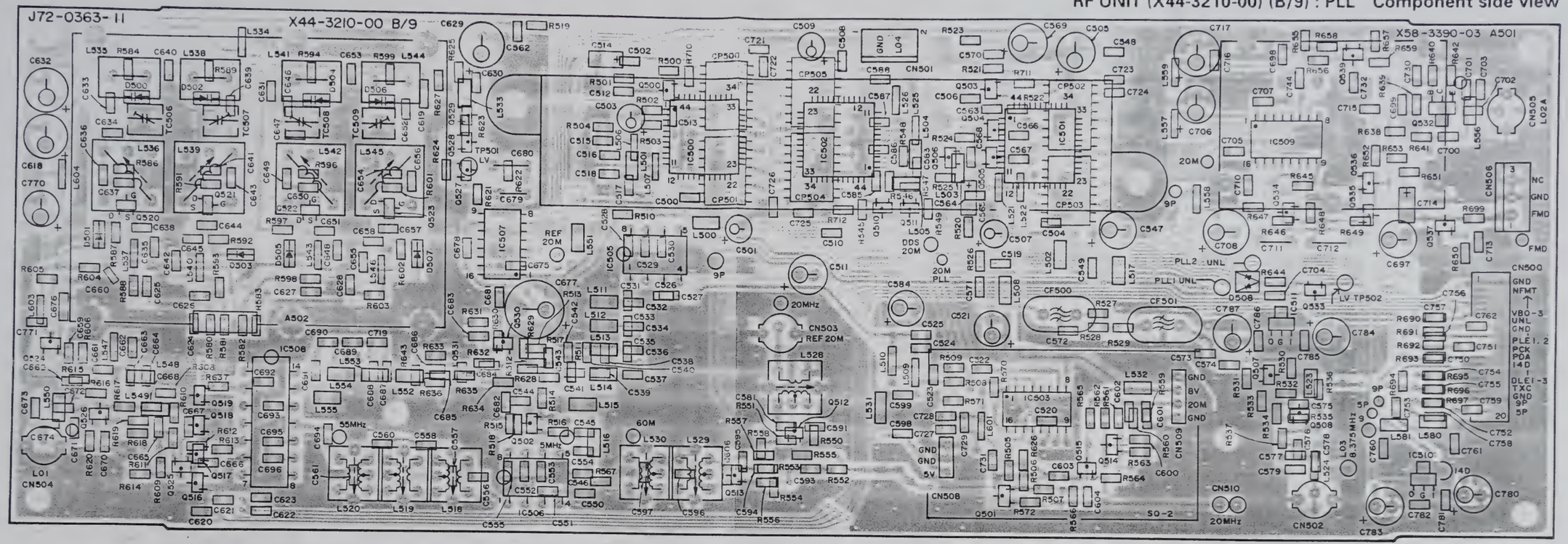

RF UNIT (X44-3210-00) (B/9) : PLL Foil side view

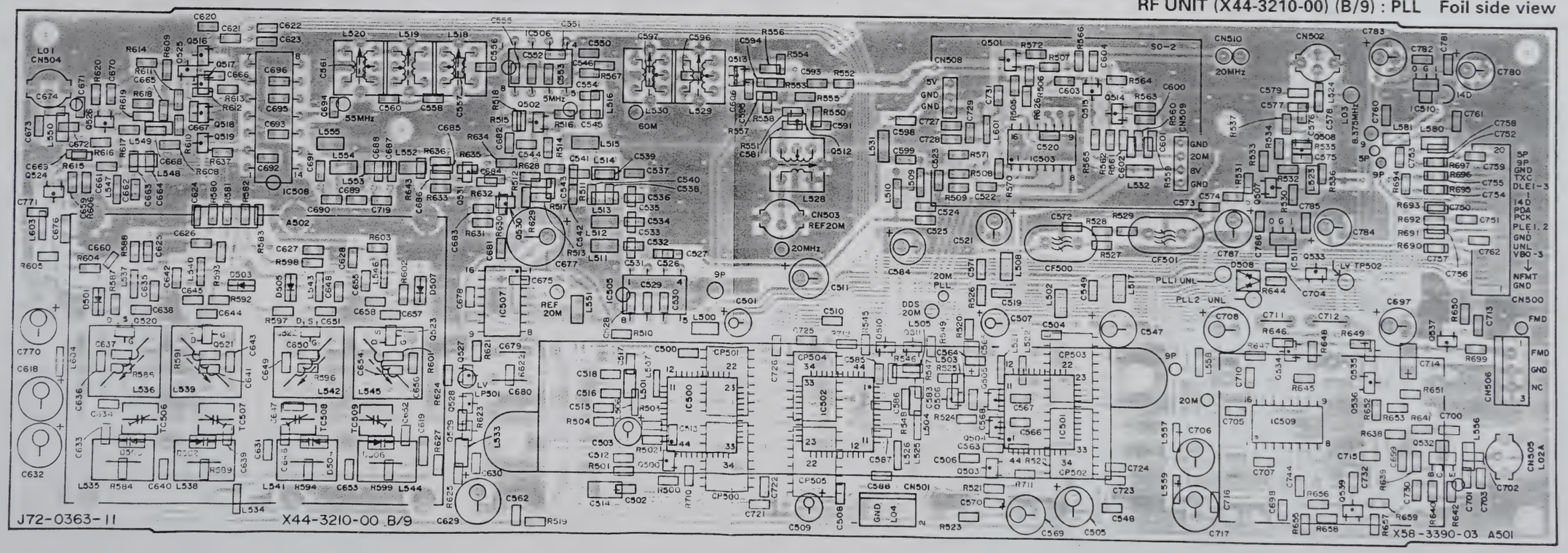

TS-870S PC BOARD VIEWS

AT UNIT (X53-3340-02) (A/2) Component side view

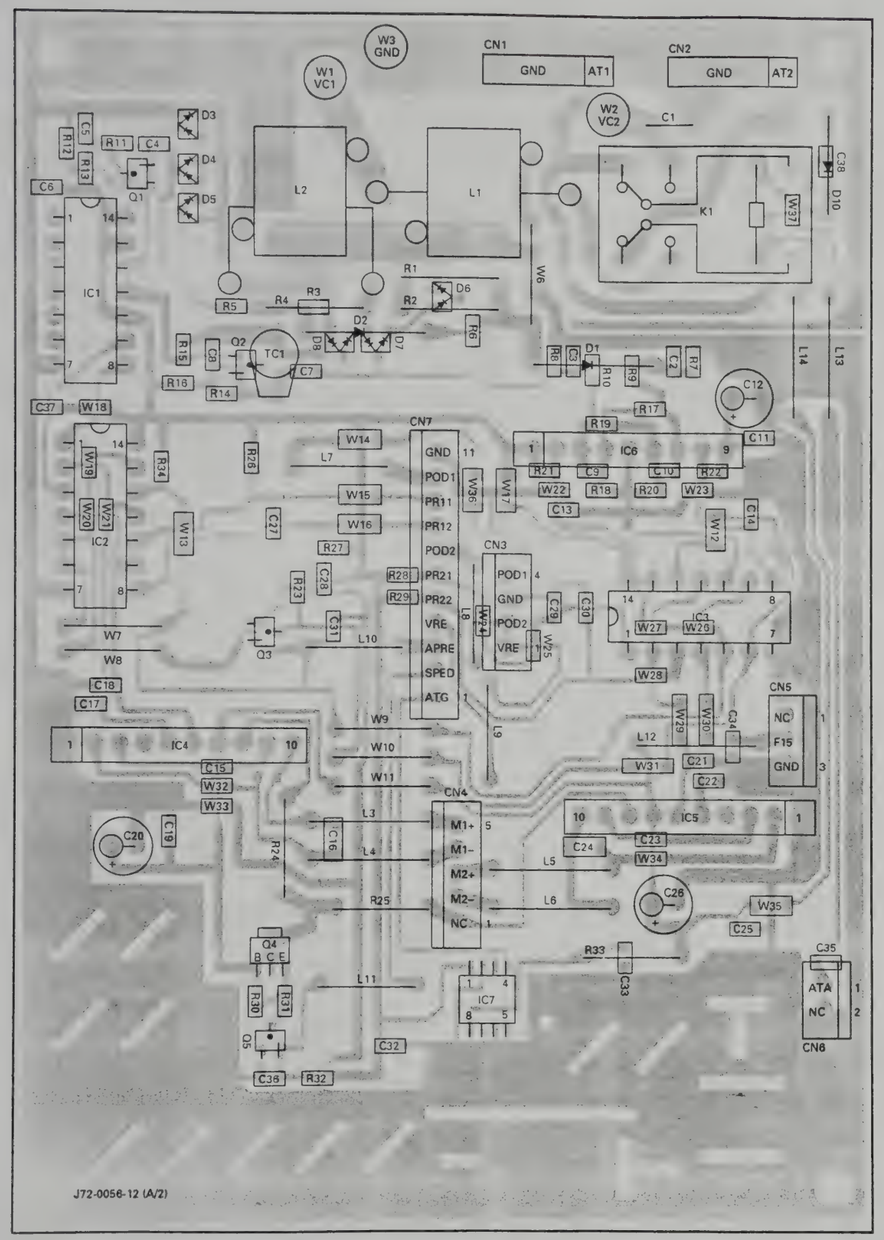

AT UNIT (X53-3340-02) (A/2) Foil side view

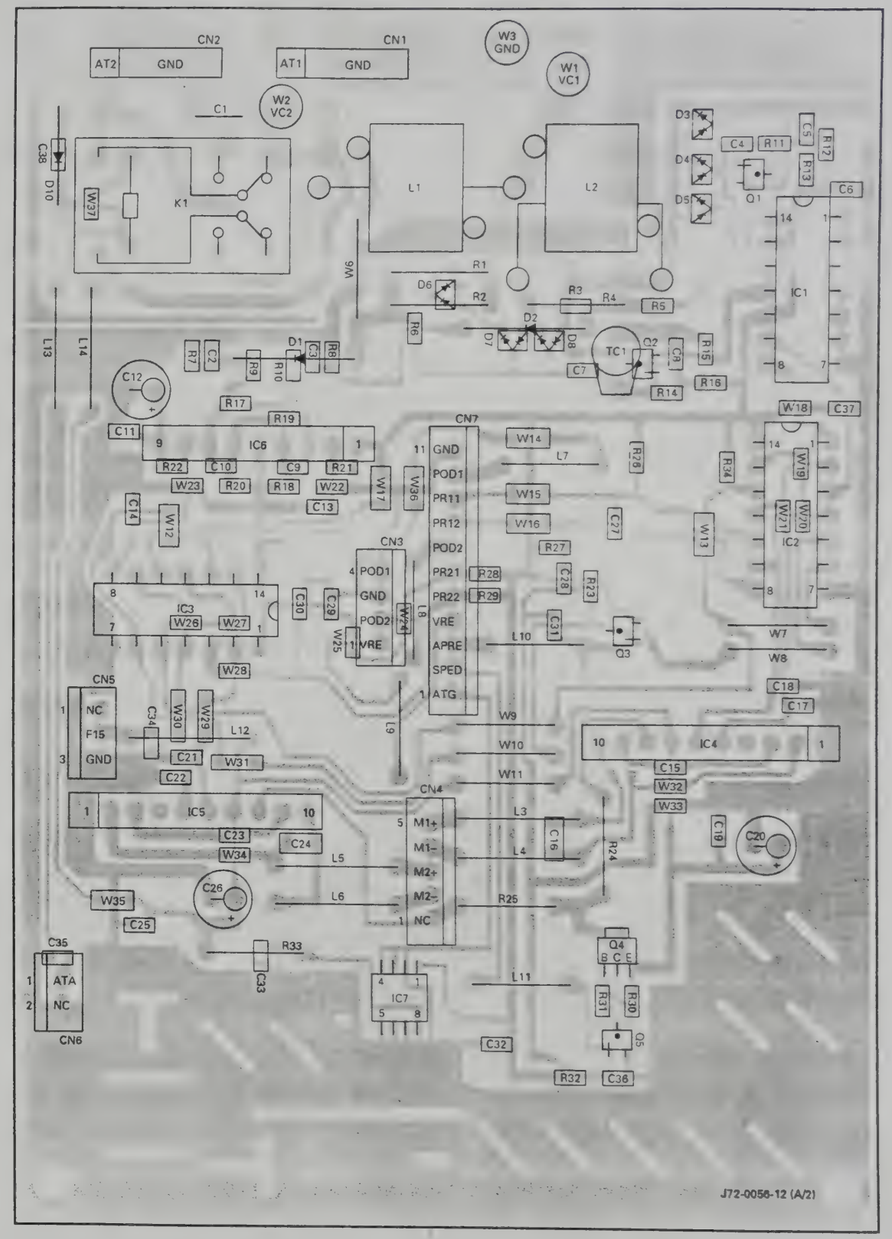

2SC2714
DTC114EK

2SA1204

MC78L05M

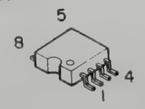

NJM2903S

BA6109U2

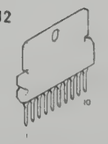

TC4066BP

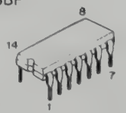

SN74S74N

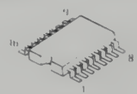

AT UNIT (X53-3340-02) (B/2) Component side view

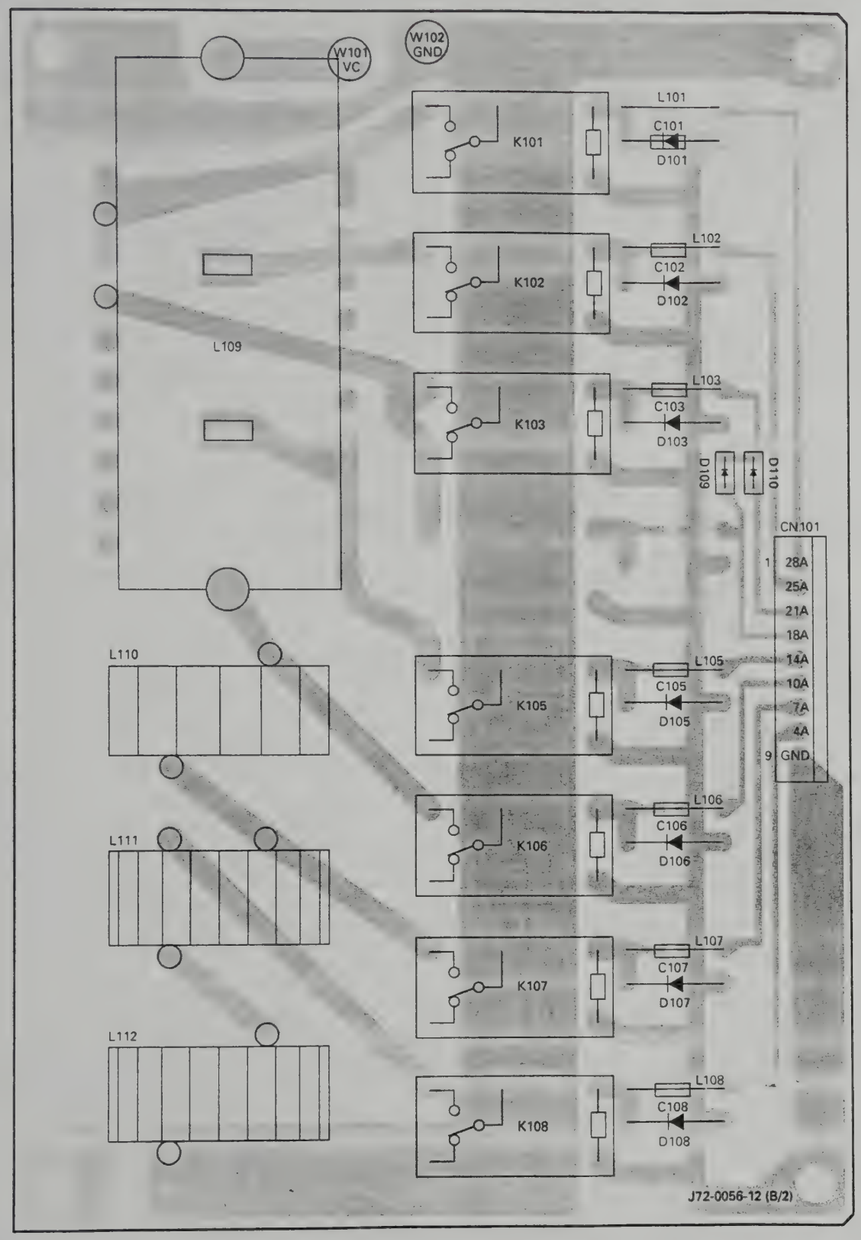

AT UNIT (X53-3340-02) (B/2) Foil side view

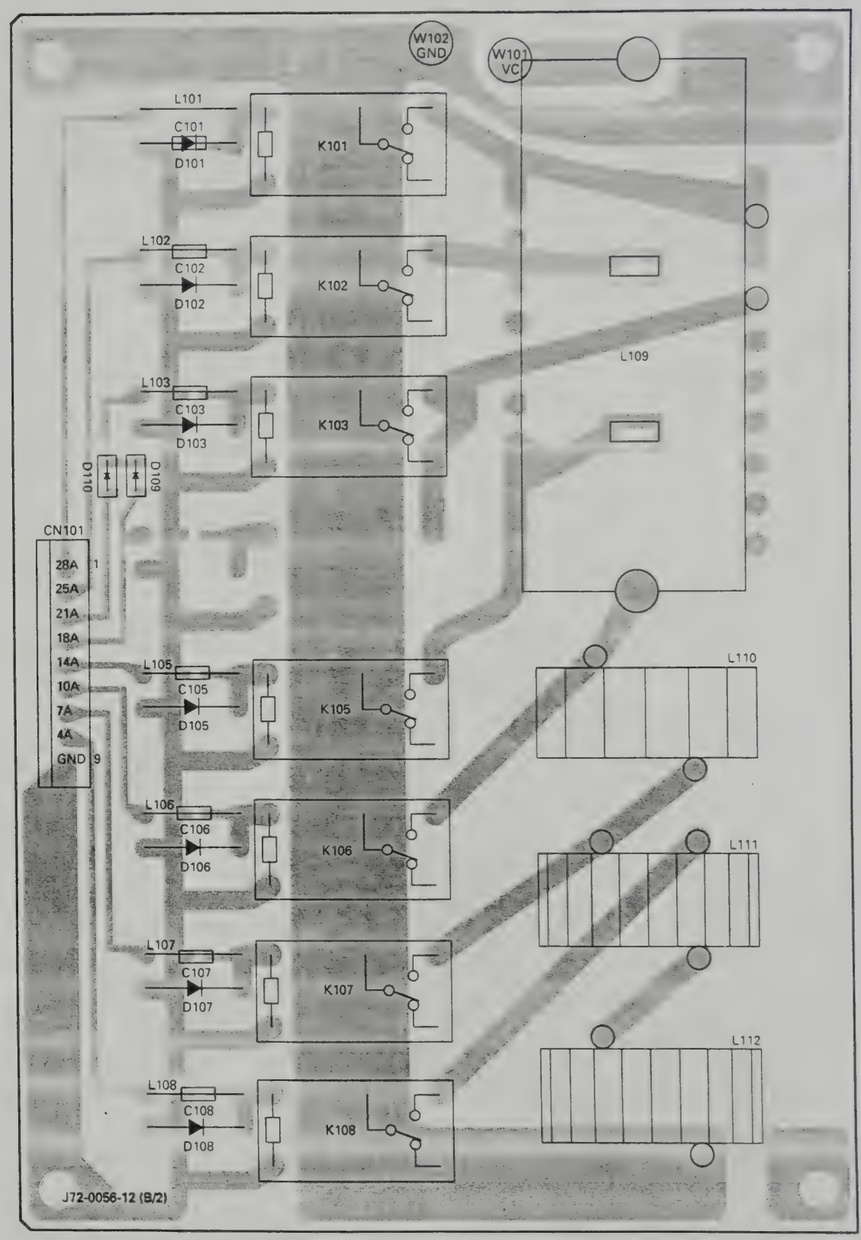

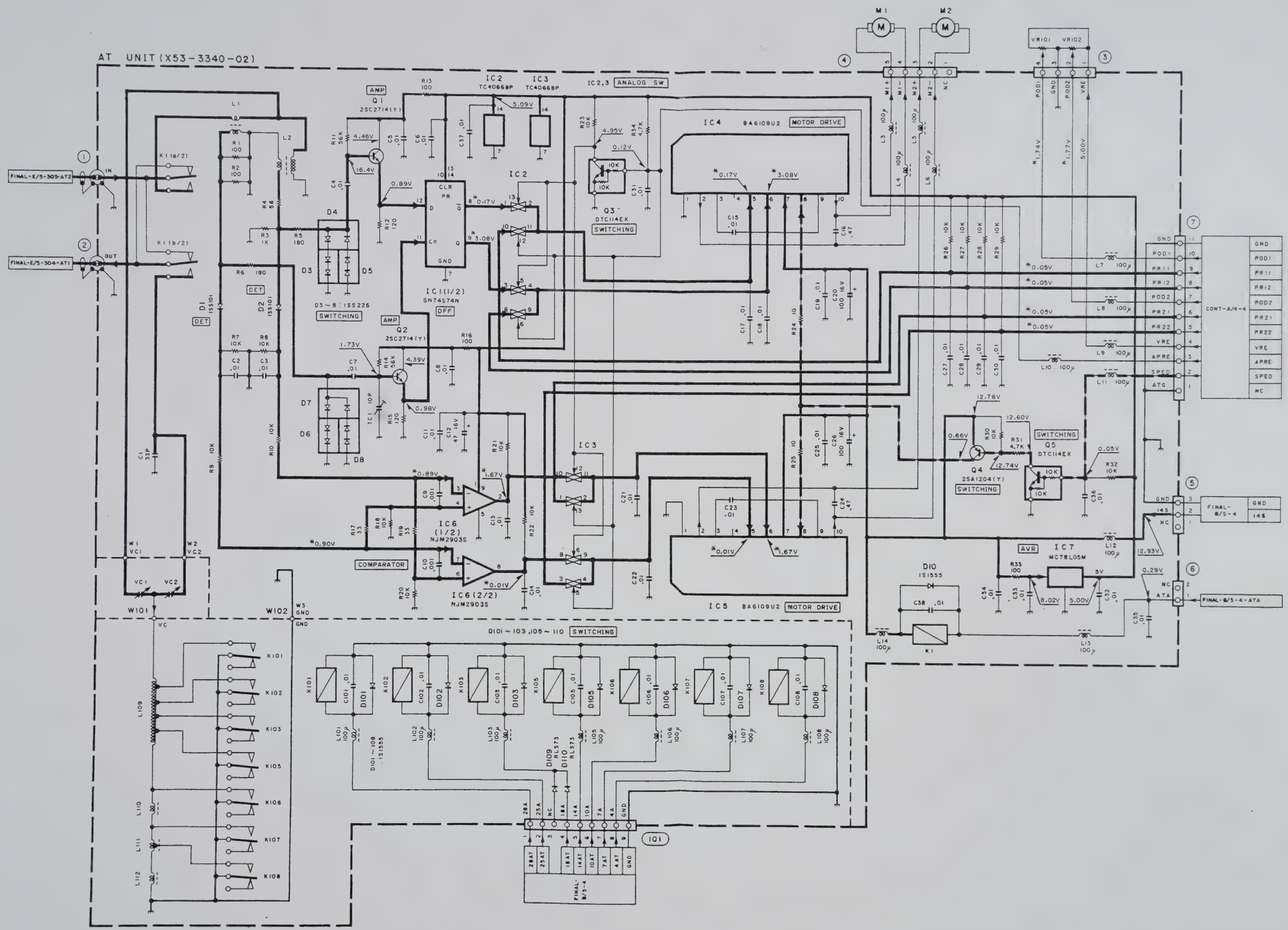
AT UNIT (X53-3340-02)
IC1(1/2) SN74S74N
IC2 TC4066BP
IC3 TC4066BP
IC2,3 ANALOG SW
IC4 BA6109U2 MOTOR DRIVE
IC5 BA6109U2 MOTOR DRIVE
IC6 (1/2) NJM2903S
IC6 (2/2) NJM2903S
IC7 MC78L05M
Q1 2SC2714(Y)
Q2 2SC2714(Y)
Q3 DTC114EK
Q4 2SA1204(Y)
Q5 DTC114EK
D1 ~ 8 : 1SS226
D101 ~ 103, 105 ~ 110
D101 ~ 108 : 1S1555
D109 RLS73
D110 RLS73
D10 1S1555
AMP
SWITCHING
DET
COMPARATOR
AVR
OFF
MOTOR DRIVE
FINAL-E/S-305-AT2
FINAL-E/S-304-AT1
CONT-A/4-4
FINAL-E/S-4
FINAL-E/S-4-ATA
M1
M2
VR101
VR102
W1
W2
W3
W101
W102
K1(a/2)
K1(b/2)
K101
K102
K103
K105
K106
K107
K108
K1
L1
L2
L3
L4
L5
L6
L7
L8
L9
L10
L11
L12
L13
L14
L109
L110
L111
L112
TC1
101
IN
OUT
GND
5.09V
4.46V
16.4V
0.89V
0.17V
3.08V
1.73V
4.39V
0.98V
0.89V
1.67V
0.90V
0.01V
4.95V
0.12V
1.74V
1.77V
5.00V
0.05V
12.76V
12.60V
0.66V
12.74V
12.93V
0.29V
8.02V
5V

TS-870S PC BOARD VIEW

CONTROL UNIT (X53-356X-XX) (A/4) : CONTROL Component side view
0-11 : K,P 0-21 : M 0-22 : M2 0-71 : X 2-71 : E 2-72 : E2 2-73 : E3 2-74 : E9

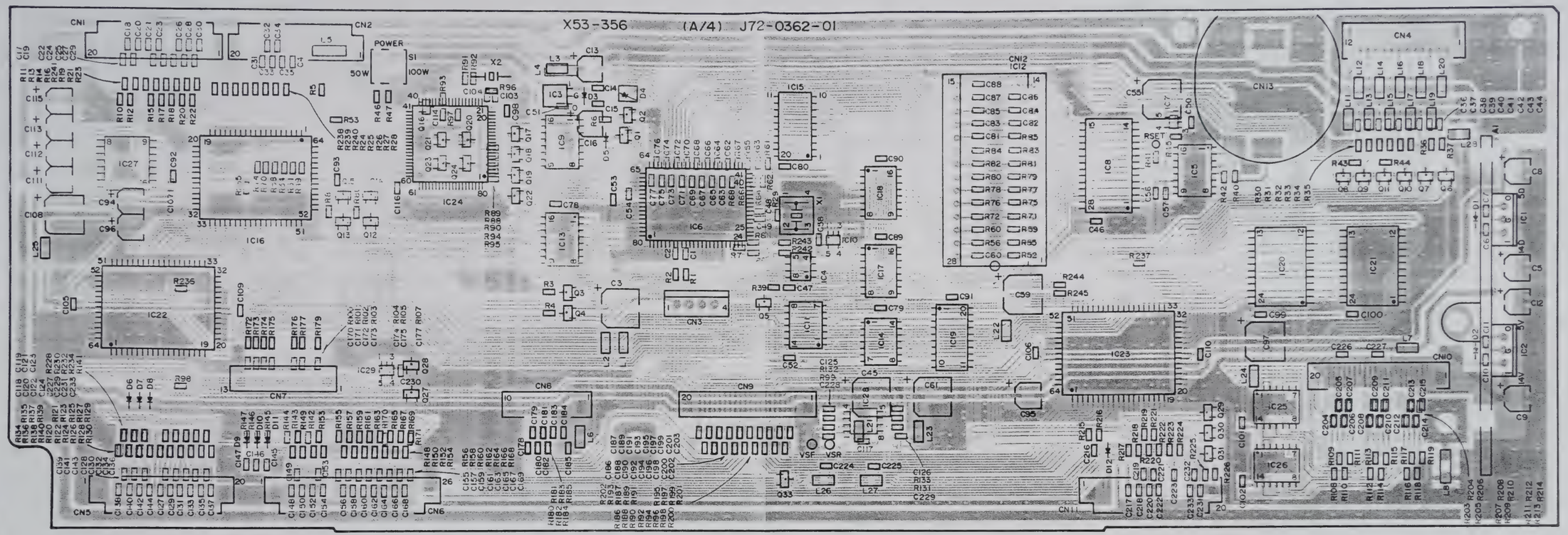

DTA143EK
DTC143EK
DTC114EK
DTC143TK

TA78L08F

UPC7805H

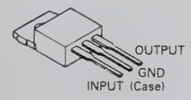

TC7S04F
TC7S32F

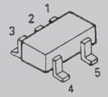

NJM2904M

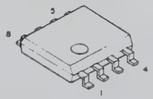

AT2402N10SI2.7

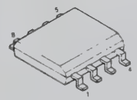

TC74VHC08F
TC74VHC32F

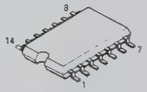

LC3564QMF-10

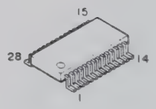

TC4052BF
TC4584BF

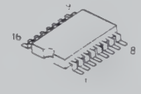

CONTROL UNIT (X53-356X-XX) (A/4) : CONTROL Foil side view

0-11 : K,P 0-21 : M 0-22 : M2 0-71 : X 2-71 : E 2-72 : E2 2-73 : E3 2-74 : E9

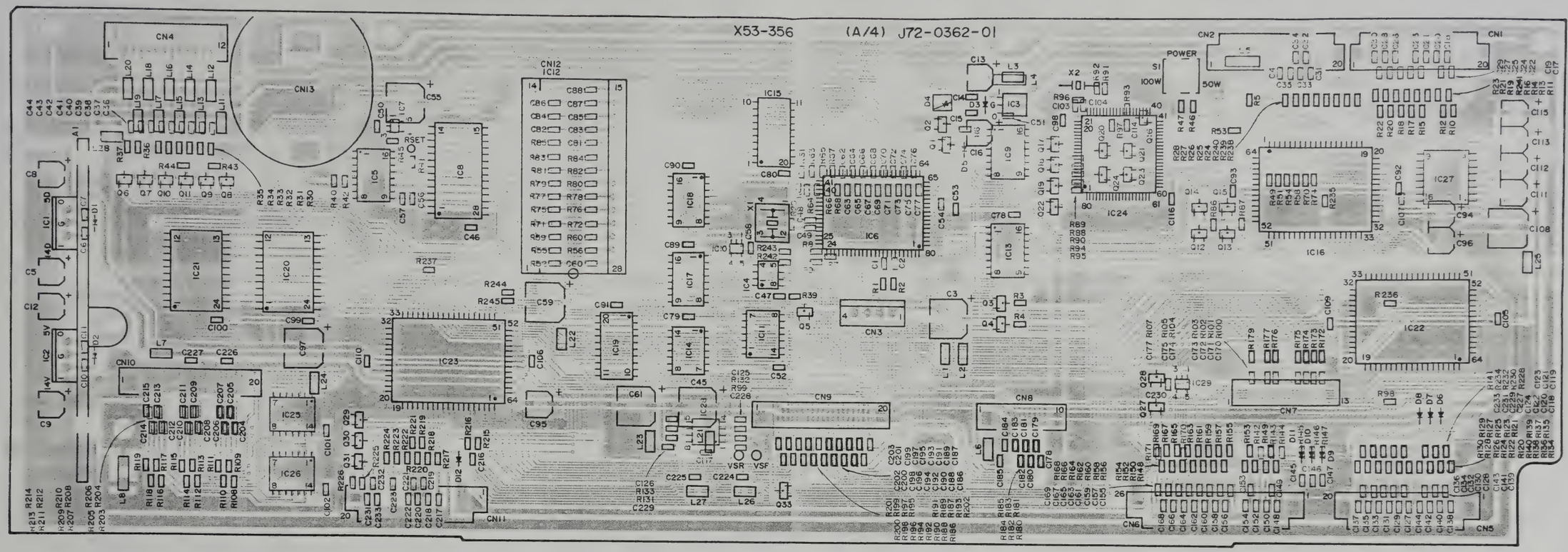

ADM232LAR

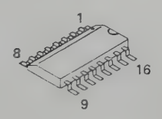

TC74VHC138F

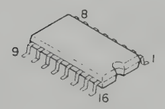

MB3780A
UPD6345GS

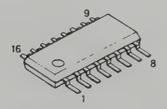

TC74VHC245F
TC74VHC573F

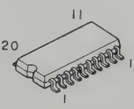

LZ92K371

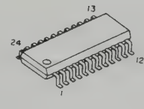

27C512RJLB-K

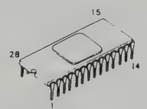

CXD1095Q

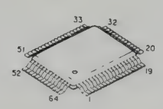

M37702S4BFP

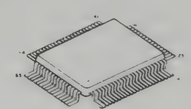

68HC05G2419553

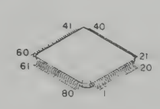

CONTROL UNIT (X53-356X-XX) (B/4) : SW Component side view
0-11 : K,P 0-21 : M 0-22 : M2 0-71 : X 2-71 : E 2-72 : E2 2-73 : E3 2-74 : E9

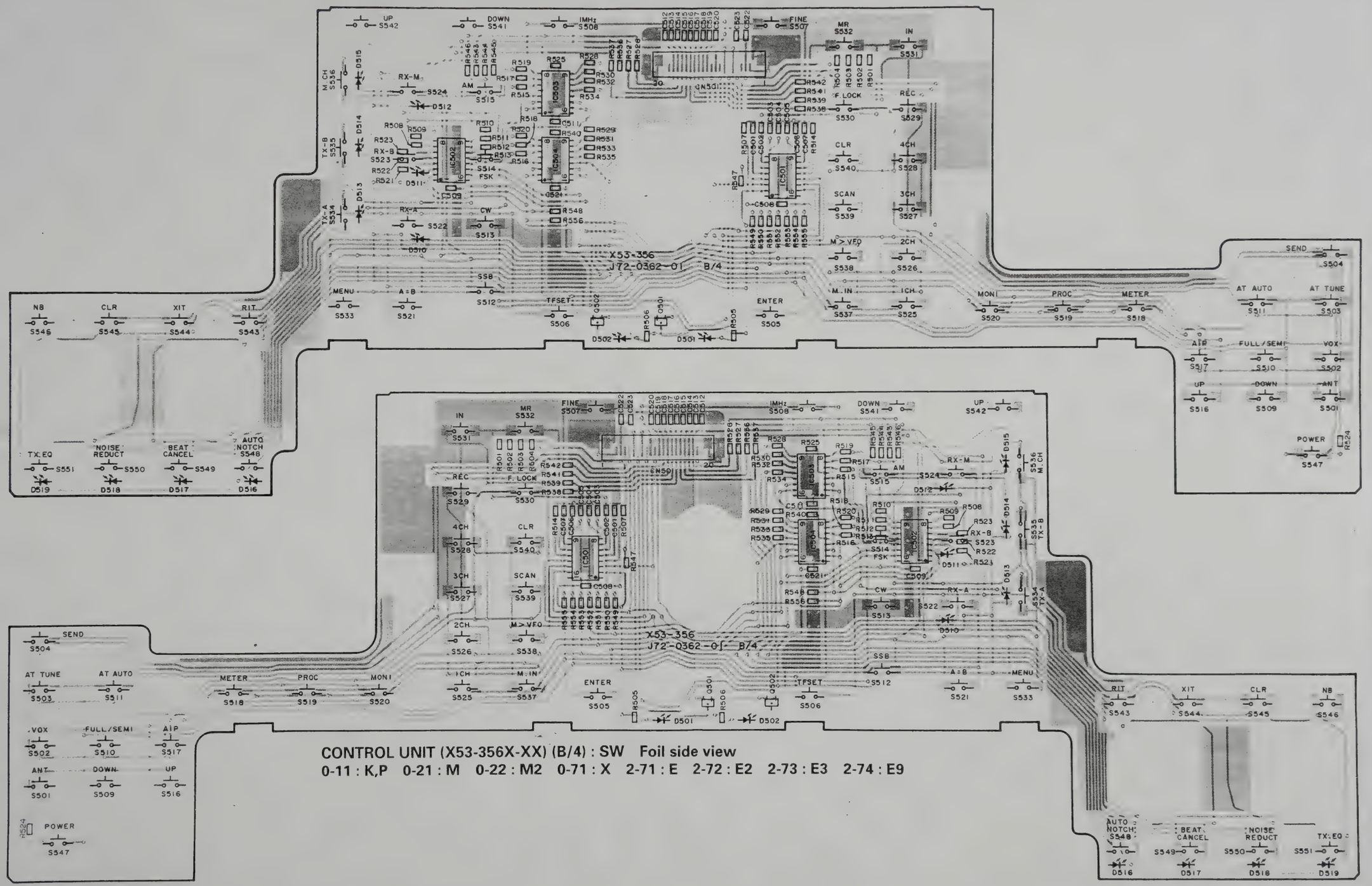

CONTROL UNIT (X53-356X-XX) (B/4) : SW Foil side view
0-11 : K,P 0-21 : M 0-22 : M2 0-71 : X 2-71 : E 2-72 : E2 2-73 : E3 2-74 : E9

CONTROL UNIT (X53-356X-XX) (B/4) : SW

0-11 : K,P 0-21 : M 0-22 : M2 0-71 : X 2-71 : E 2-72 : E2 2-73 : E3 2-74 : E9

CONTROL UNIT (SW) (X53-356X-XX) (B/4) 0-11:K,P 0-21:M 0-22:M2 0-71:X 2-71:E 2-72:E2 2-73:E3 2-74:E9

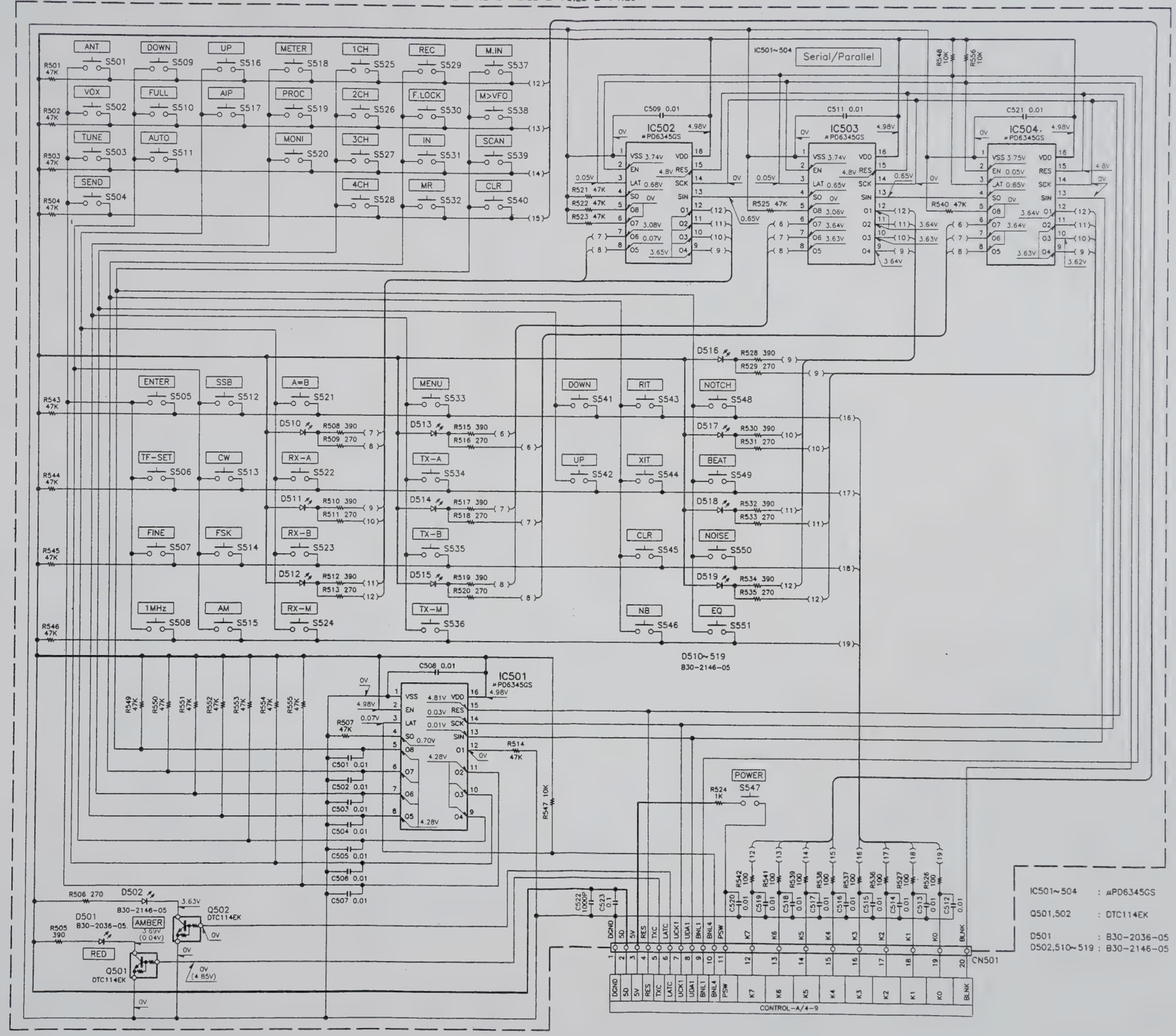

TS-870S PC BOARD VIEW

TX-RX UNIT (X57-4620-00) Component side view

Ref. No.	Address
IC1	12G
IC2	9G
IC3	8K
IC4	13L
IC5	13N
IC6	13O
IC7	12J
IC9	8O
IC15	5D
IC16	4K
IC18	3I
IC23	5I
IC25	5K
IC26	3N
IC27	4M
IC29	2O
IC31	4O
IC33	4Q
IC34	2M
IC37	7N
IC38	7P
IC44	7O
Q1	9F
Q2	9O
Q4	9F
Q8	2E
Q9	3D
Q10	3D
Q12	2I
Q13	3H
Q14	2H
Q15	3G
Q16	4I
Q22	3P
Q23	4H
Q26	2Q
Q27	2P
D3	5R
D5	4E
D7	9J

Component side

Pattern 1

Pattern 2

Pattern 3

Pattern 4

Foil side

X57-4620-00
J72-0361-12

TS-870S PC BOARD VIEWS

RF UNIT (X44-3210-00) (D/9)
Component side view

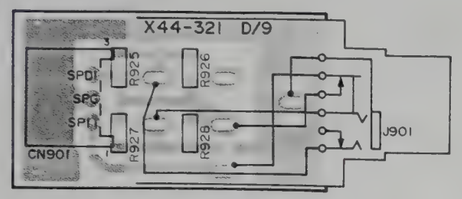

RF UNIT (X44-3210-00) (D/9)
Foil side view

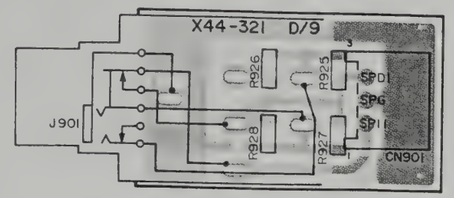

RF UNIT (X44-3210-00) (E/9)
Component side view

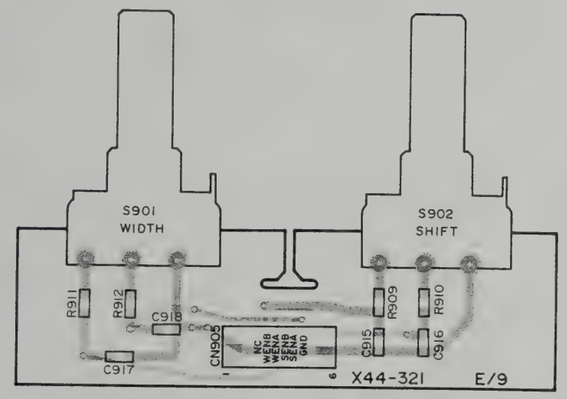

RF UNIT (X44-3210-00) (E/9)
Foil side view

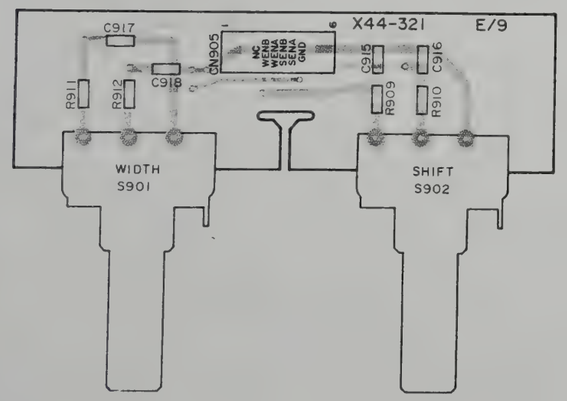

RF UNIT (X44-3210-00) (F/9)
Component side view

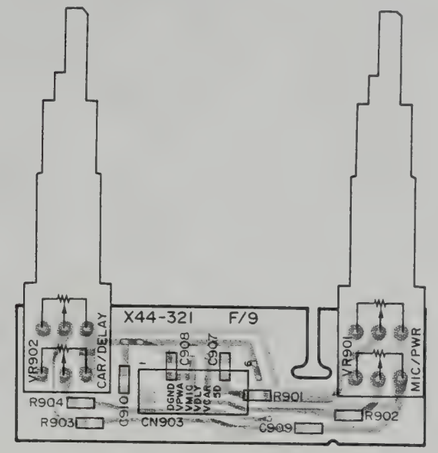

RF UNIT (X44-3210-00) (G/9)
Component side view

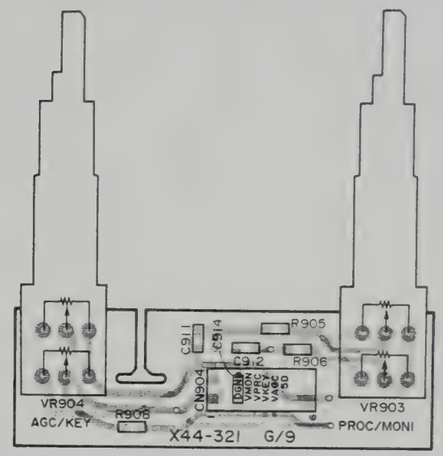

RF UNIT (X44-3210-00) (F/9)
Foil side view

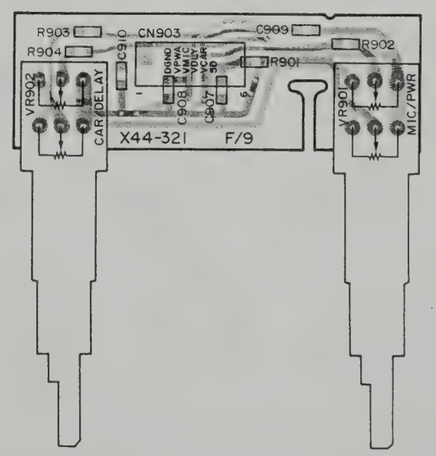

RF UNIT (X44-3210-00) (G/9)
Foil side view

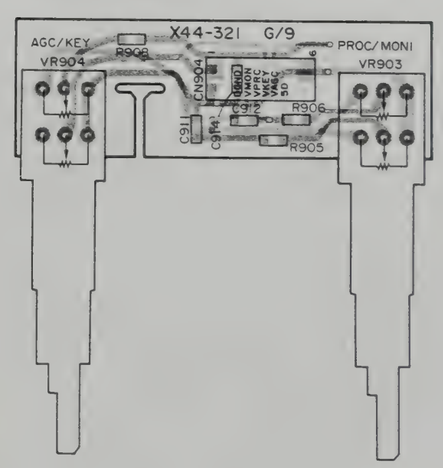

K L M N O P Q R S T

RF UNIT (X44-3210-00) (H/9)
Component side view

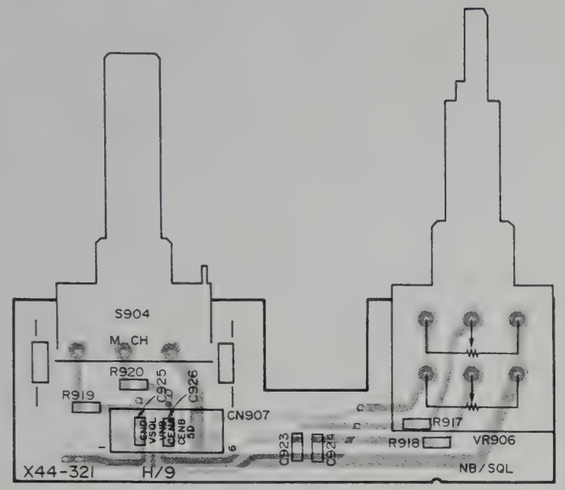

RF UNIT (X44-3210-00) (I/9)
Component side view

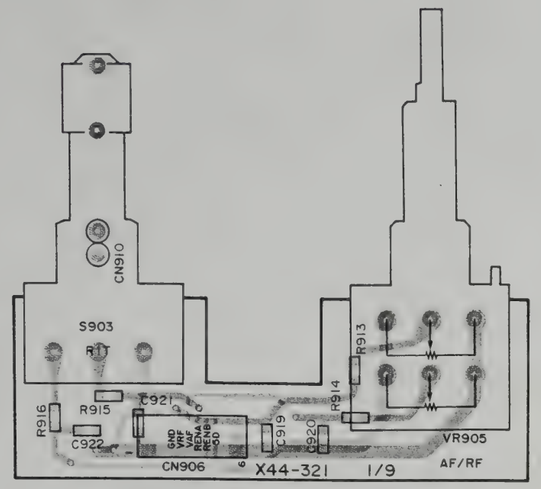

RF UNIT (X44-3210-00) (H/9)
Foil side view

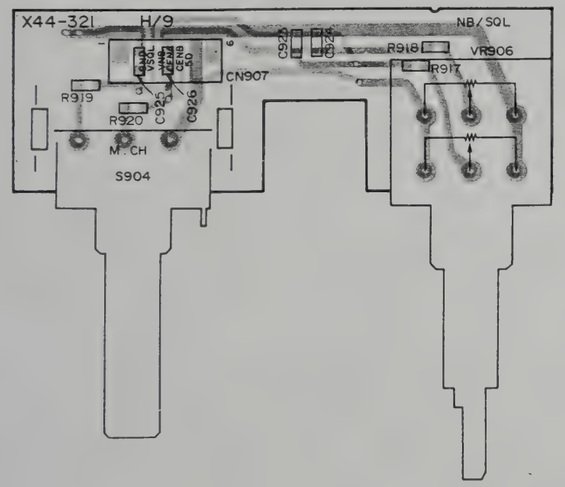

RF UNIT (X44-3210-00) (I/9)
Foil side view

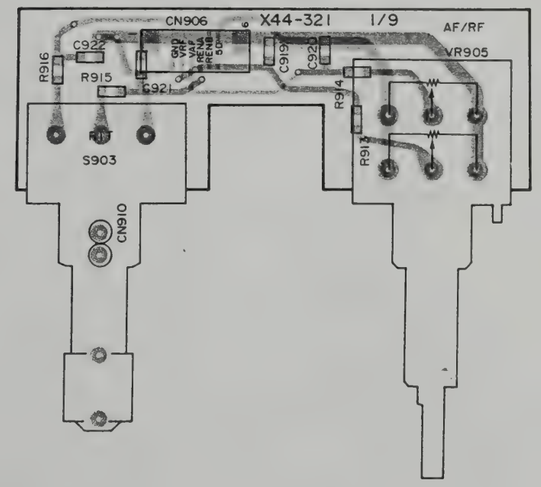

Component side
Foil side

FINAL UNIT (X45-351X-XX) (C/5) : CONNECTION Component side view
0-00 : K,P,M,M2,X 2-71 : E,E2,E3,E9

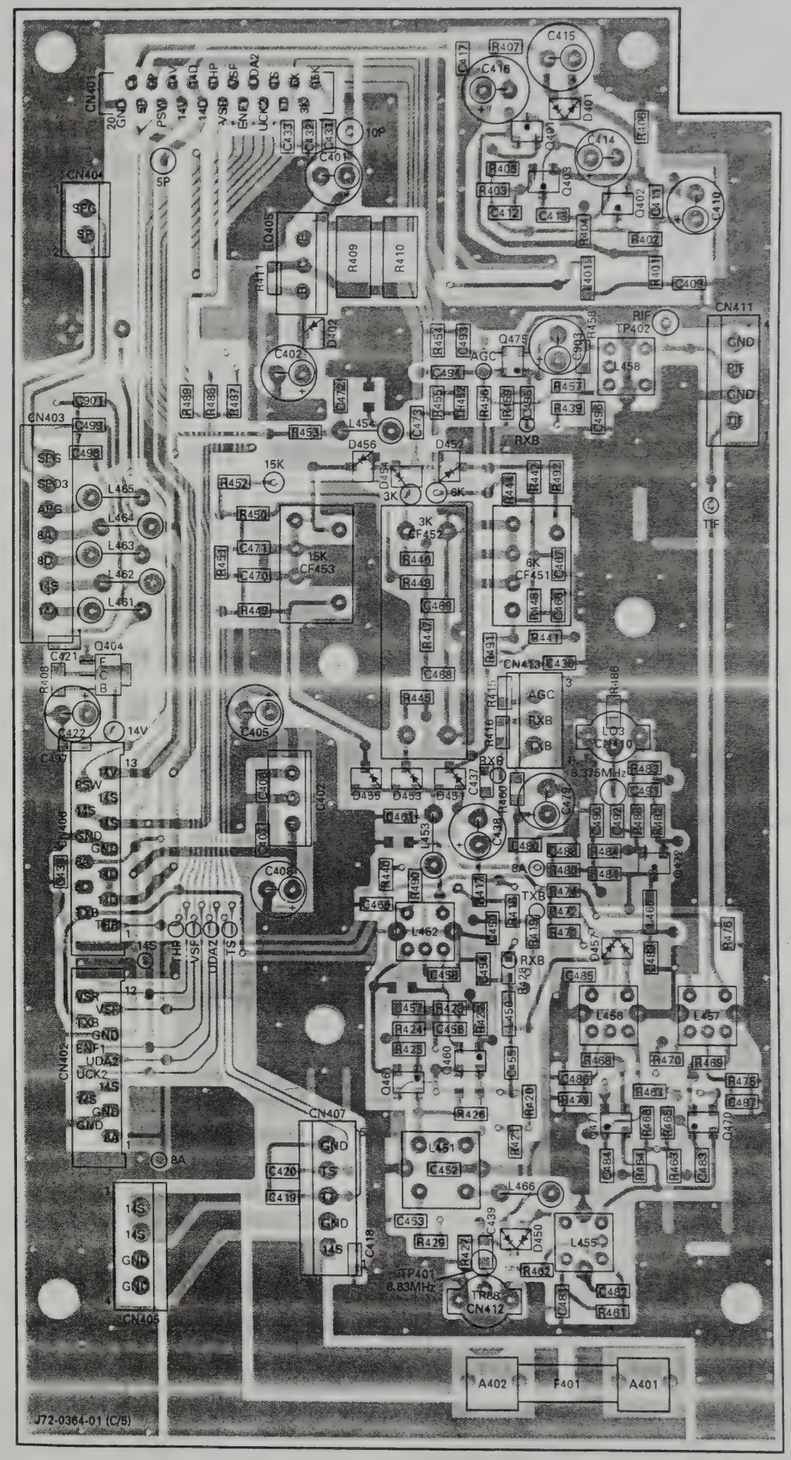

TX-RX UNIT (X57-4620-00) Component side view + Foil side parts

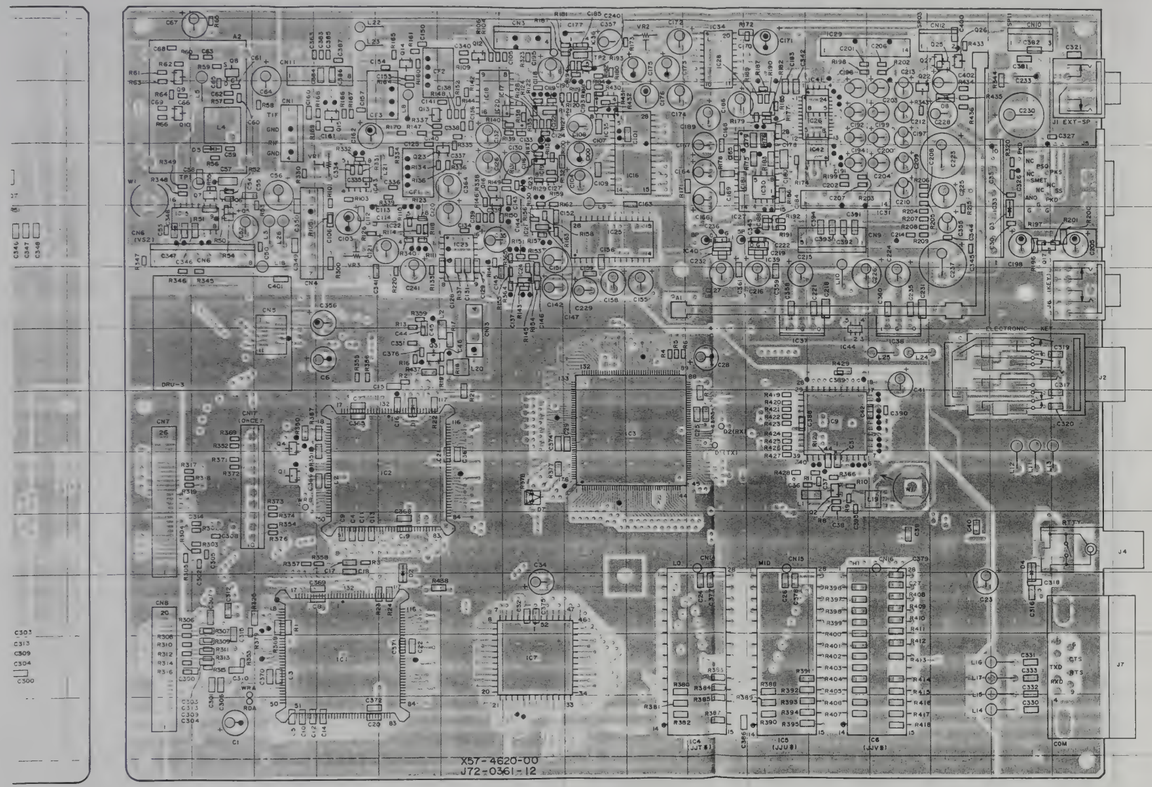

Ref. No	Address	Ref. No	Address
IC1	12X	Q1	9W
IC2	9Y	Q2	9AF
IC3	8AC	Q3	7Y
IC4	13AD	Q4	8W
IC5	13AE	Q5	5Y
IC6	13AG	Q6	4V
IC7	12AA	Q7	4V
IC9	8AF	Q8	2V
IC15	5U	Q9	2U
IC16	4AC	Q10	3U
IC17	3AA	Q12	2Z
IC18	3Z	Q13	3Y
IC19	4AA	Q14	2Y
IC20	3AA	Q15	3X
IC21	5AA	Q16	4Z
IC22	5Y	Q17	5AJ
IC23	5Z	Q22	3AH
IC24	6AA	Q23	4Z
IC25	5AB	Q25	2AH
IC26	3AF	Q26	2AH
IC27	4AE	Q27	2AH
IC28	3AE	D1	8Y
IC29	2AF	D2	11Y
IC30	4AE	D3	5AI
IC31	4AF	D4	11AI
IC33	4AI	D5	4V
IC34	2AE	D7	9AA
IC35	3AB	D8	3AH
IC36	2AB		
IC37	7AE		
IC38	7AG		
IC39	5AE		
IC40	5AD		
IC41	3AF		
IC42	4AF		
IC43	4X		
IC44	7AF		

Component side
Pattern 1
Pattern 2
Pattern 3
Pattern 4
Foil side

● Connect 1 and 4

TX-RX UNIT (X57-4620-00) Foil side view

Ref. No	Address
IC17	3M
IC19	4M
IC20	3N
IC21	5M
IC22	5O
IC24	6M
IC28	3I
IC30	4I
IC35	3L
IC36	2L
IC39	5J
IC40	5J
IC41	3I
IC42	4I
IC43	4P
O3	7O
O5	5R
O6	4R
O7	4R
O17	5E
O25	2F
O1	8O
D2	11O
D4	11E
D8	3F

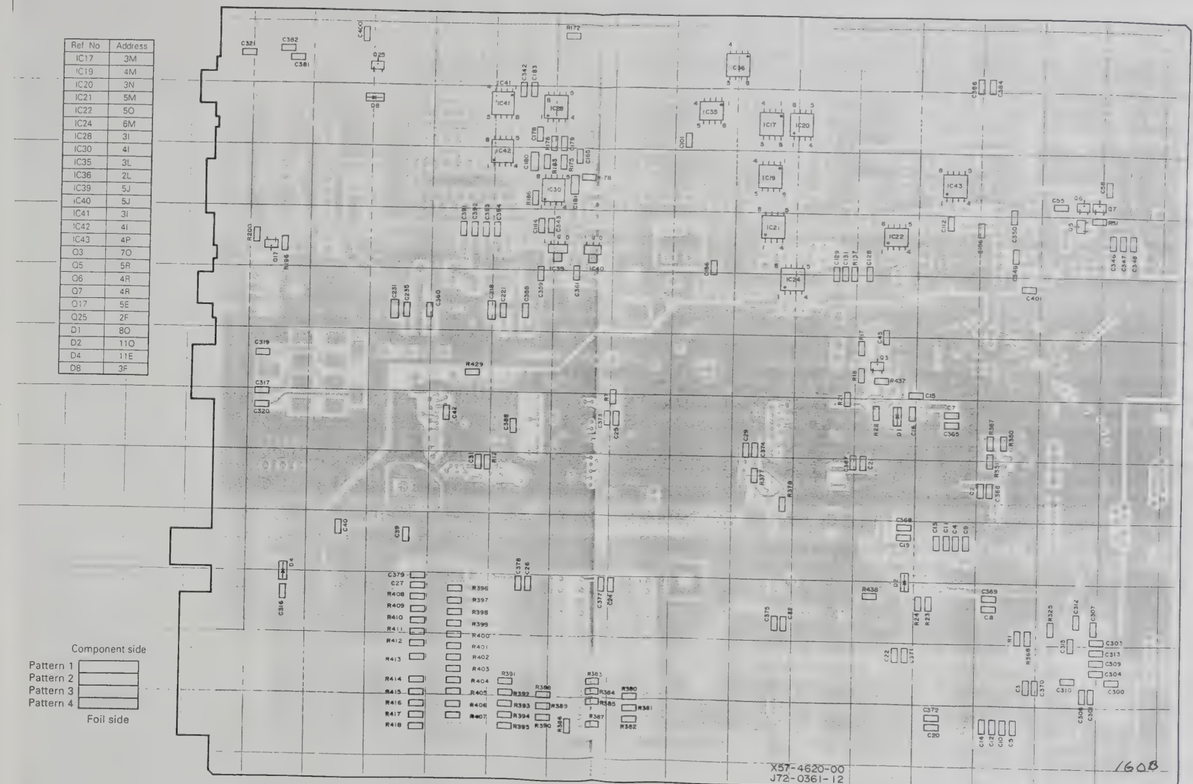

TS-870S CIRCUIT DIAGRAM

DTA143EK 2SC2412K
DTC124EK 2SC3112
DTC124XK 2SC2714
DTC143EK 2SC3324

UPC7805H

NJM78L05UA
NJM78L08UA

TC7S04F

NJM2100M
NJM3404AM
NJM4560M
NJM5532M

AD822AR

LA4422

M51131L

M66001PF

MC74HC4052F
MC74HC4053F

PCM69AU

M62363FP

AK4318-VS
AK5340-VS

7032LC44JLQA

MCM56824AFN25

27C256PCJJTC
27C256PCJJUC
27C256PCJJVC

DSP56002FC40

TX-RX UNIT (X57-4620-00) (1/2)

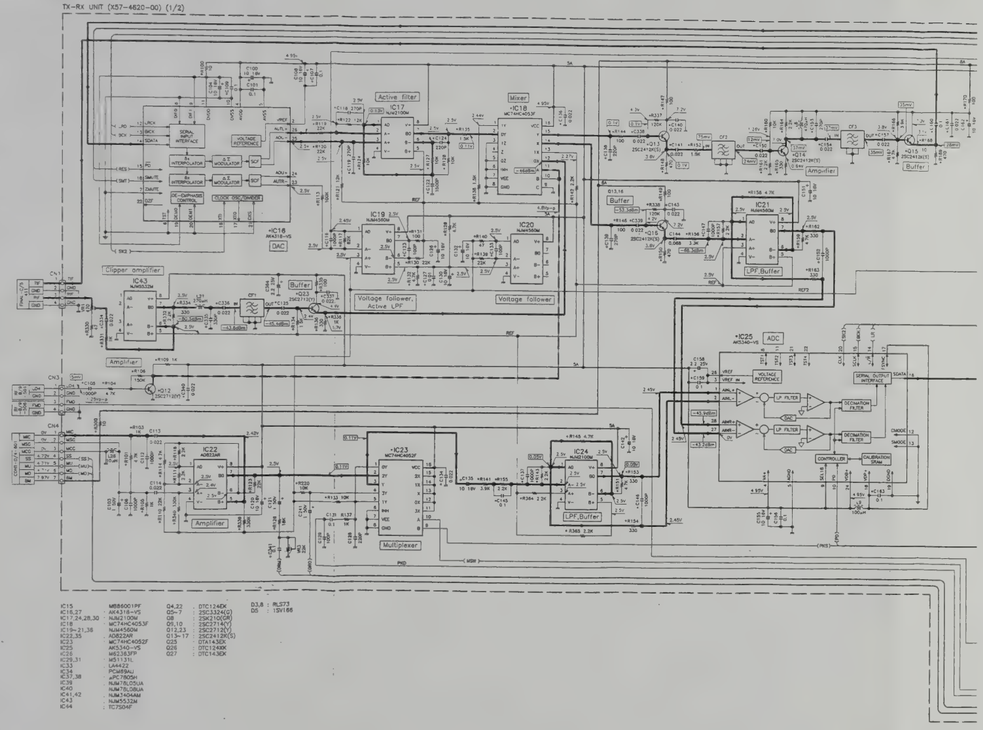

IC15 M66001PF
IC16,27 AK4318-VS
IC17,28,30 NJM4560M
IC18 MC74HC4053F
IC19~21,36 NJM4560M
IC22,35 AD822AR
IC23 MC74HC4052F
IC25 AK5340-VS
IC26 M62363FP
IC29,31 NJM2100M
IC33 LA4422
IC34 PCM69AU
IC37,38 μPC7805H
IC39 NJM78L05UA
IC41,42 NJM78L08UA
IC43 NJM5532M
IC44 TC7S04F

Q4,32 : DTC124EK
Q5~7 : 2SC3324(G)
Q8,9 : 2SC2714(O)
Q10 : 2SC2714(Y)
Q12,23 : 2SC2712(Y)
Q13~17 : 2SC2412K(S)
Q25 : DTA143EK
Q26 : DTC124XK
Q27 : DTC143EK

D3,8 : RLS73
D5 : 1SV166

Note) • Ref. No. : Parts of pattern 1.

TX-RX UNIT (X57-4620-00) (1/2)

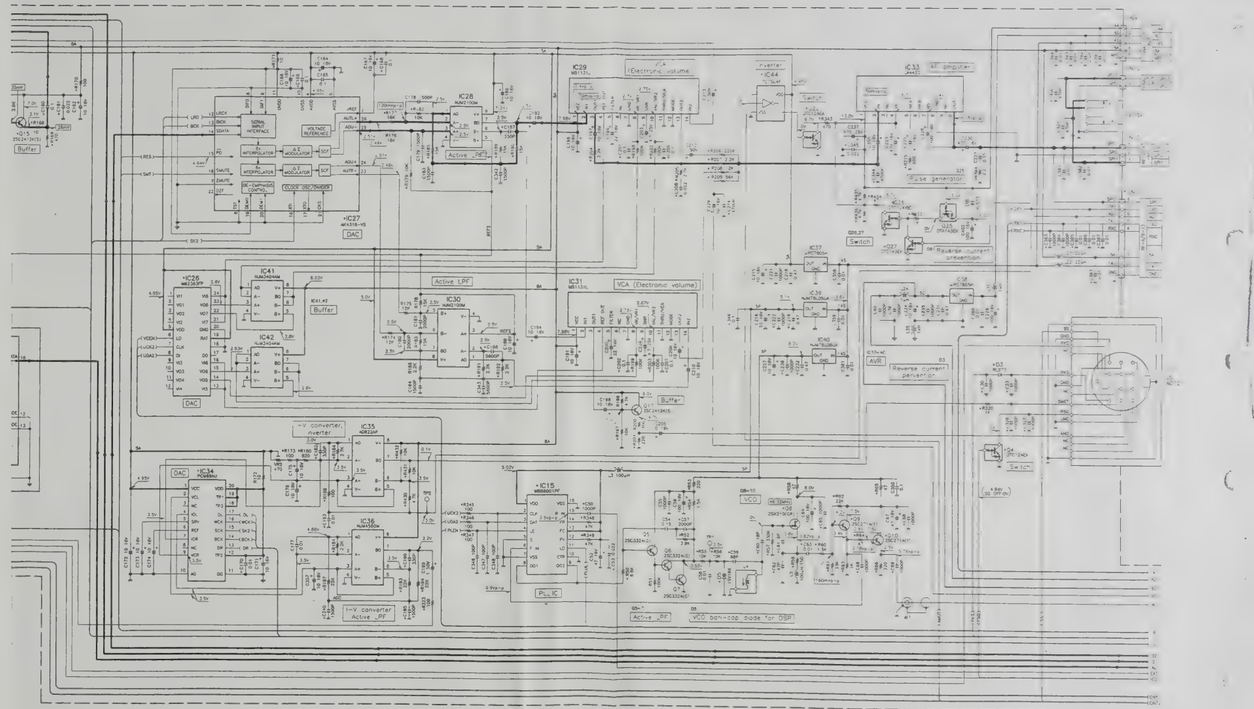

TX-RX UNIT (X57-4620-00) (2/2)

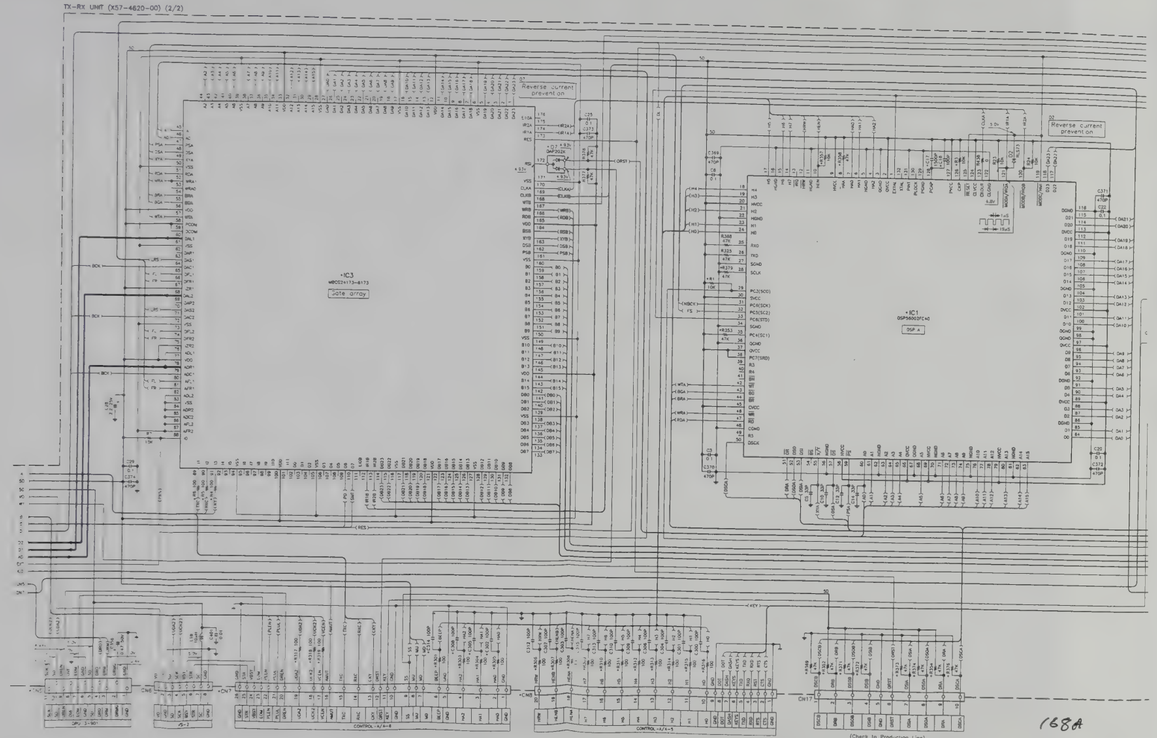

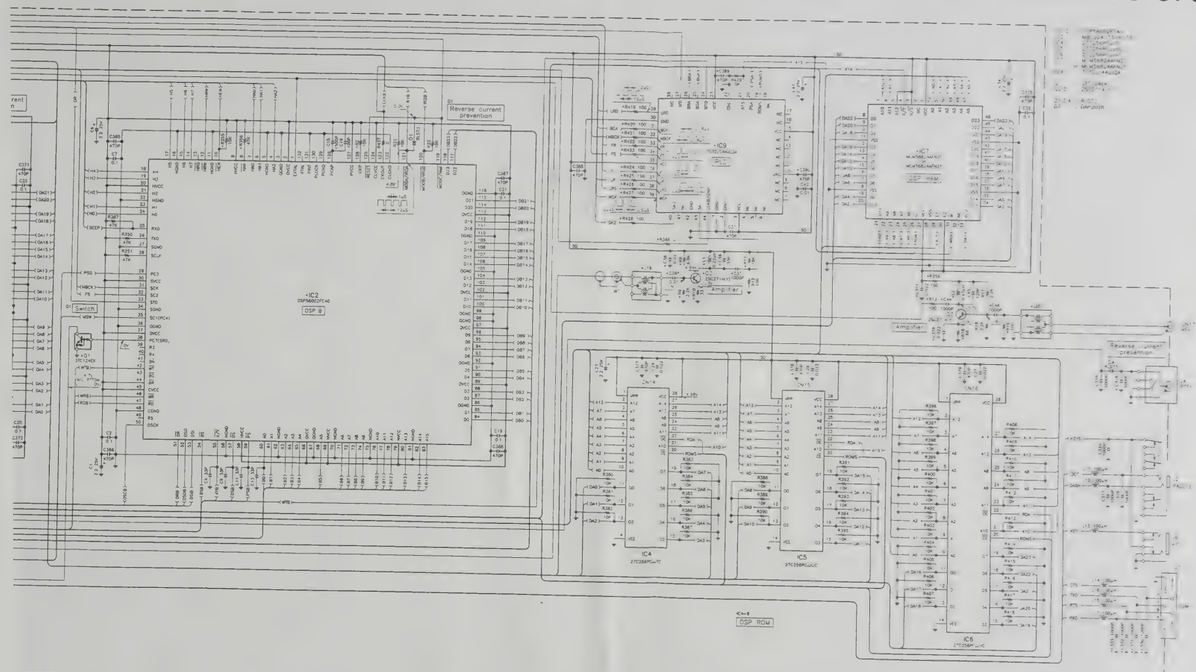

Note) • Ref. No. : Parts of pattern 1

168B

TS-870S CIRCUIT DIAGRAM

CONTROL UNIT (X53-356X-XX) (A/4) : CONTROL
0-11 : K,P 0-21 : M 0-22 : M2 0-71 : X 2-71 : E 2-72 : E2 2-73 : E3 2-74 : E9

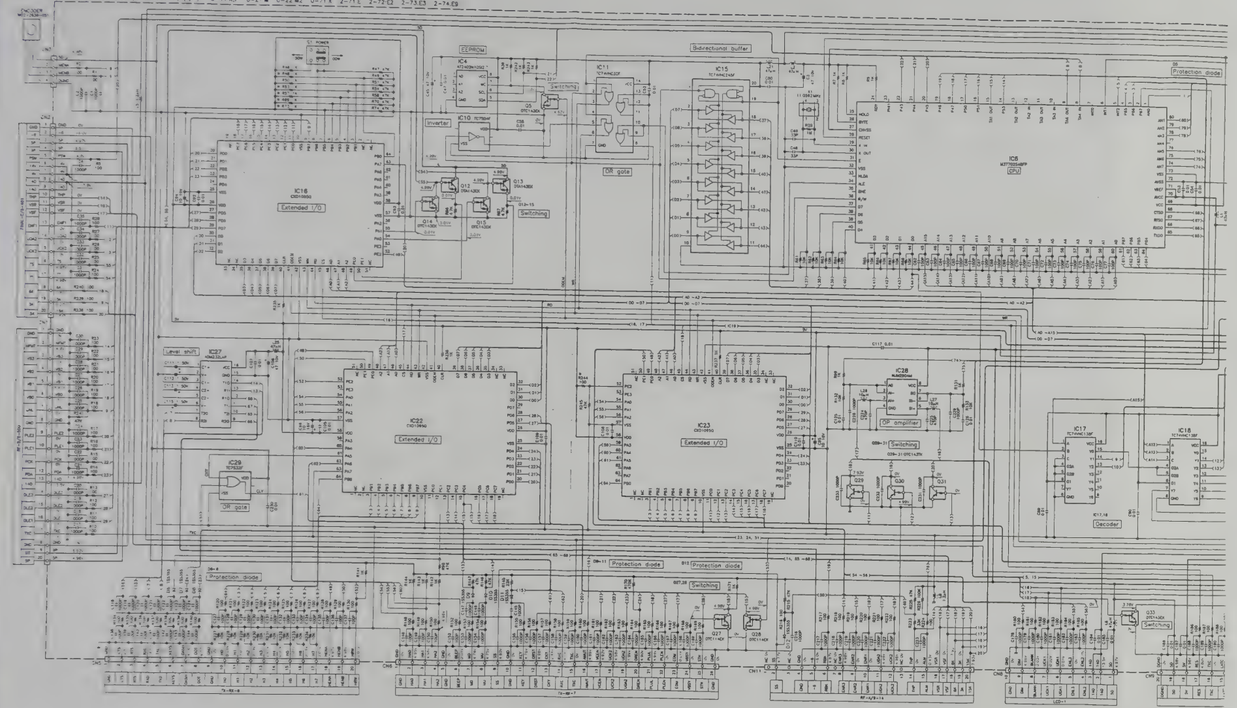

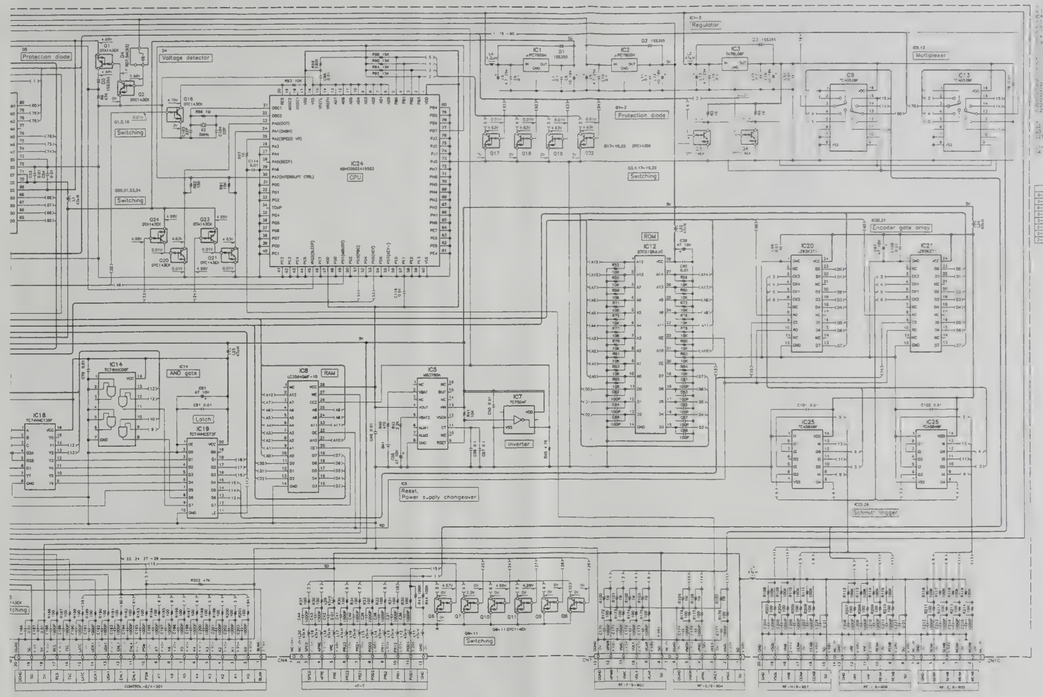

FINAL UNIT (X45-351X-XX) (A,B,D,E/5) 0-00 : K,P,M,M2,X 2-71 : E,E2,E3,E9

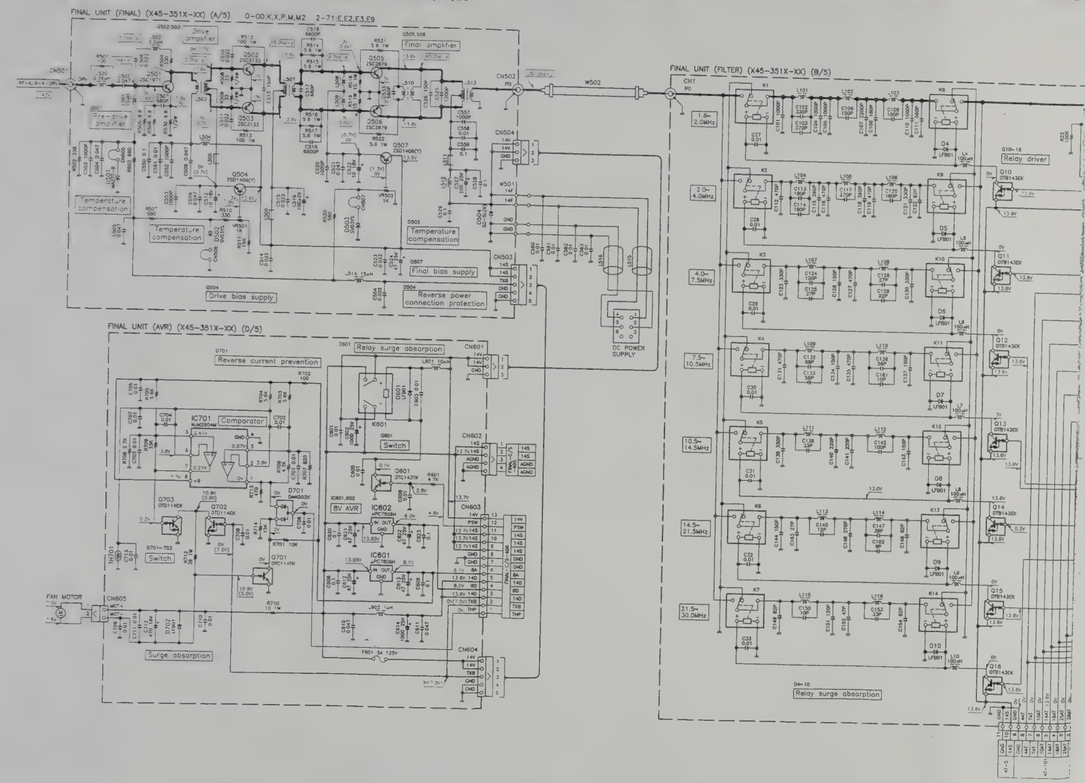

DTB143EK DTC114TK
DTC114EK DTC143TK
DTD114EK

2SC2879

2SC1971

2SD1406

2SC3133

UPC7808H

FMA7
FMC2

NJM2904M

TC9174F

136A

136B

TS-870S CIRCUIT DIAGRAM

RF UNIT (X44-3210-00) (B/9) : PLL

RF UNIT (PLL) (X44-3210-00) (B/9)

DTA124EK 2SC2996
DTC114EK 2SC3722K
2SC2712 2SD1757K
2SC2714

2SC2954

2SK508NV

TA78DS09F
TA78L09F

SN16913P

SN76514N

MB88001PF
UPD74HC390G

F71022

TS-870S

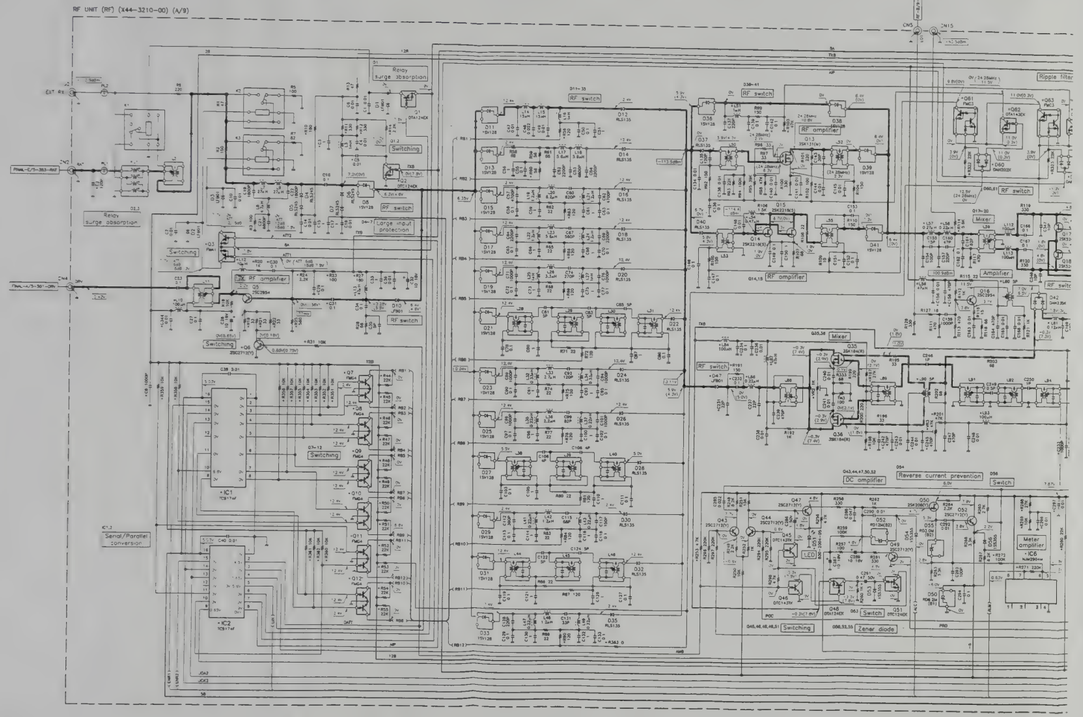

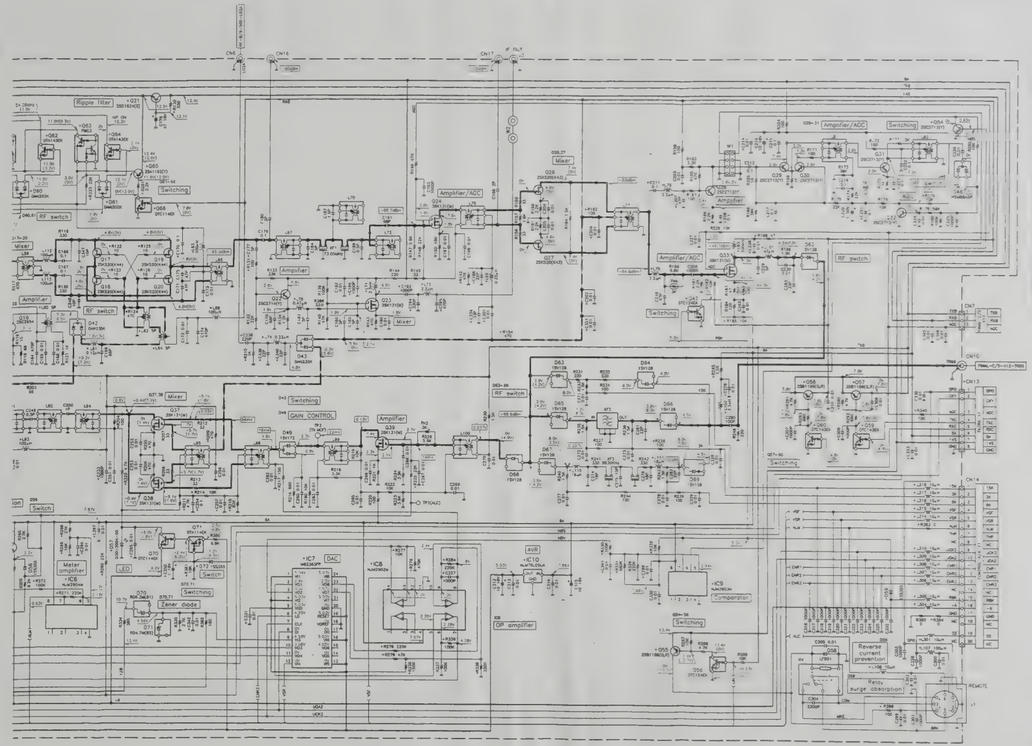

Note) • Ref. No. : Parts of pattern 1.

122A

122B

BLOCK DIAGRAM

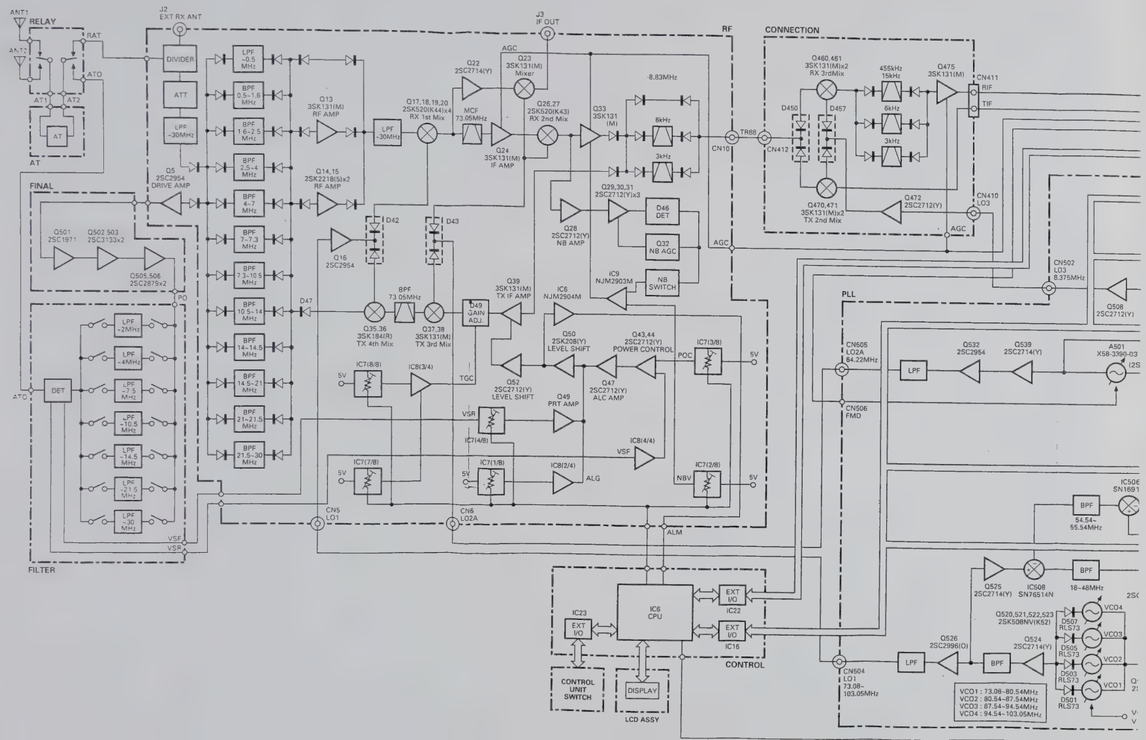

BLOCK DIAGRAM

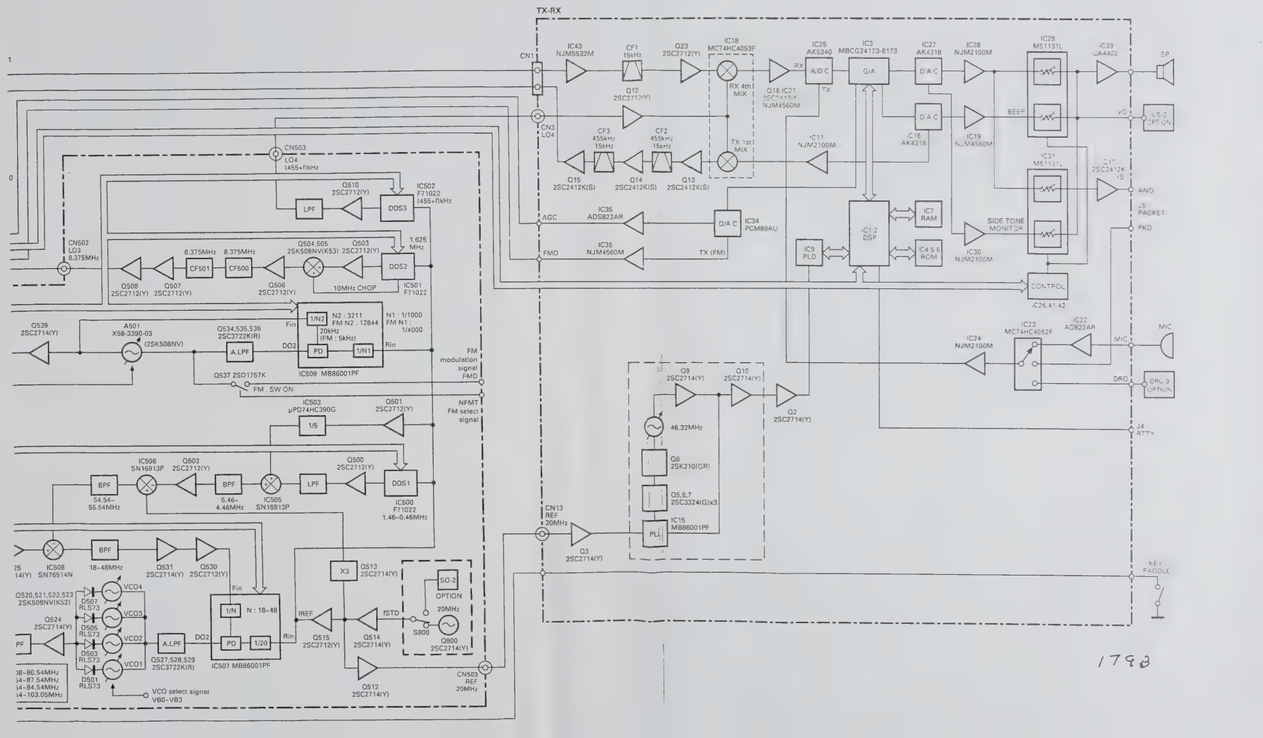

SCHEMATIC DIAGRAM TS-870S

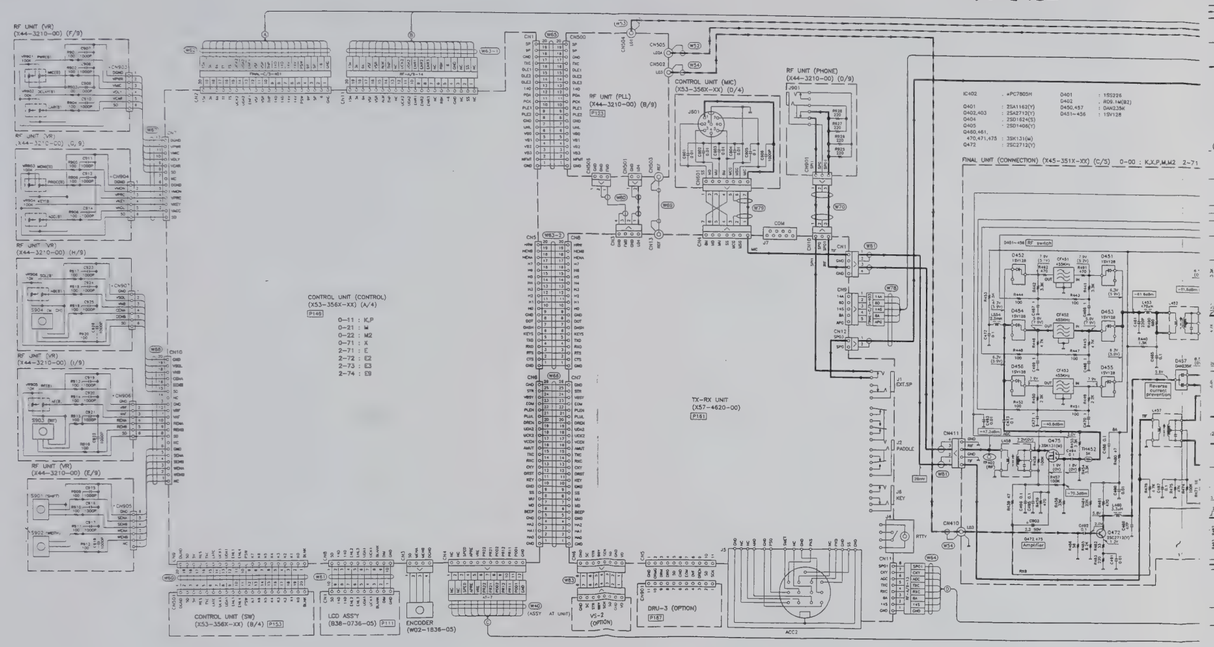

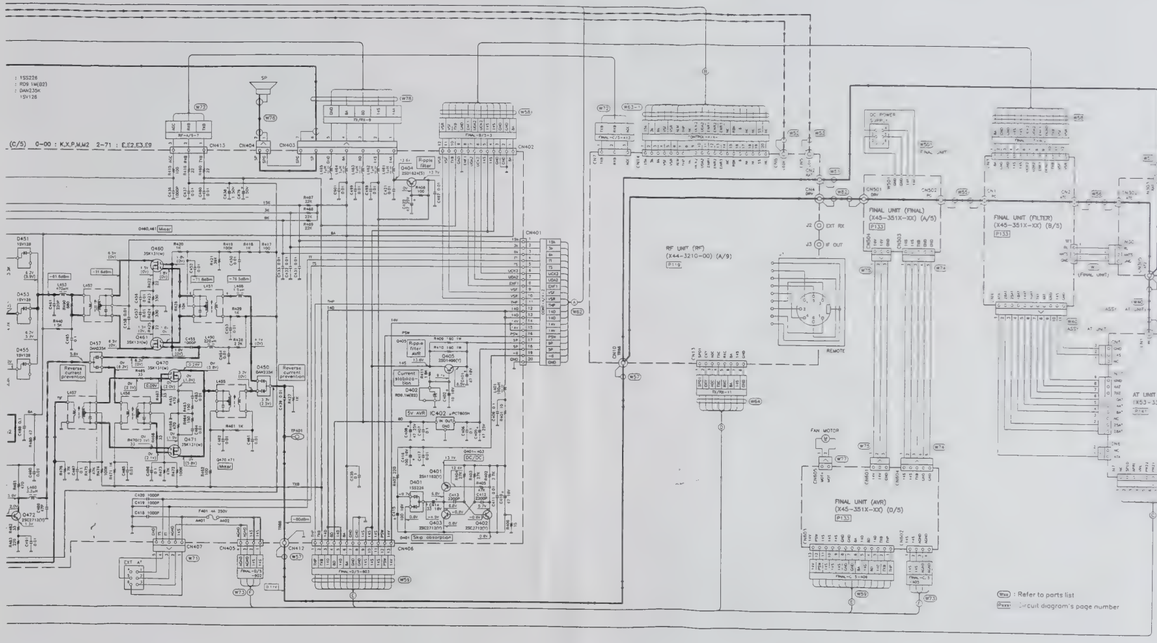
(C/5) 0-00 : K,X,P,MJ2 2-71 : E,E2,E3,E9
RF UNIT (BP) (X44-3210-00) (A/9)
FINAL UNIT (FINAL) (X45-351X-XX) (A/5)
FINAL UNIT (FILTER) (X45-351X-XX) (B/5)
FINAL UNIT (AVR) (X45-351X-XX) (D/5)
AT UNIT (X53-3340-02)
DC POWER (J49)
FAN MOTOR
REMOTE
EXT RX
IF OUT
(Xxx) : Refer to parts list
Pxxx : circuit diagram's page number

178B

TS-870S CIRCUIT DIAGRAM

DTA143EK 2SC2412K
DTC124EK 2SC2712
DTC124XK 2SC2714
DTC143EK 2SC3324

MB86001PF

2SK210

MC74HC4052F
MC74HC4053F

JPC7805H

PCM69AU

NJM78L05UA
NJM78L08UA

M62363FP

TC7S04F

AK4318-VS
AK5340-VS

NJM2100M
NJM3404AM
NJM4560M
NJM5532M

7032LC44JLQA

AD822AR

MCM56824AFN25

LA4422

27C256PCJJTC
27C256PCJJUC
27C256PCJJVC

M51131L

DSP56002FC40

TX-RX UNIT (X57-4620-00) (1/2)

Note) • Ref. No. : Parts of pattern 1.

TX-RX UNIT (X57-4620-00) (1/2)

TX-RX UNIT (X57-4620-00) (2/2)

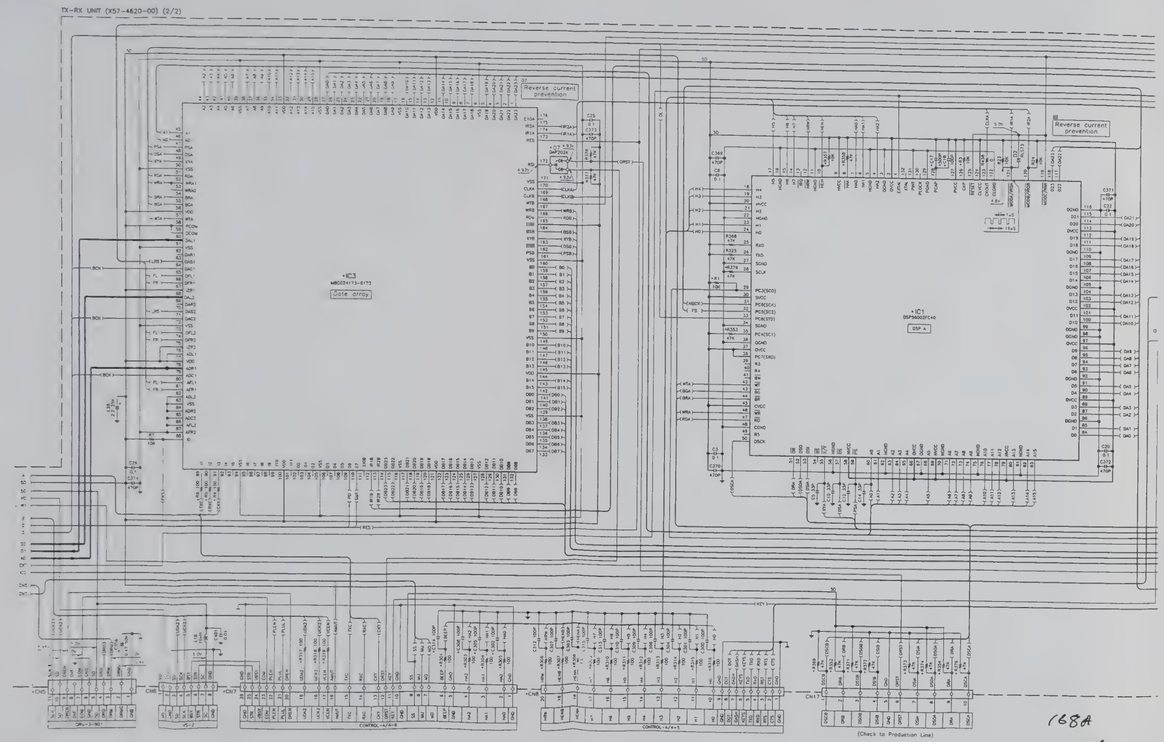

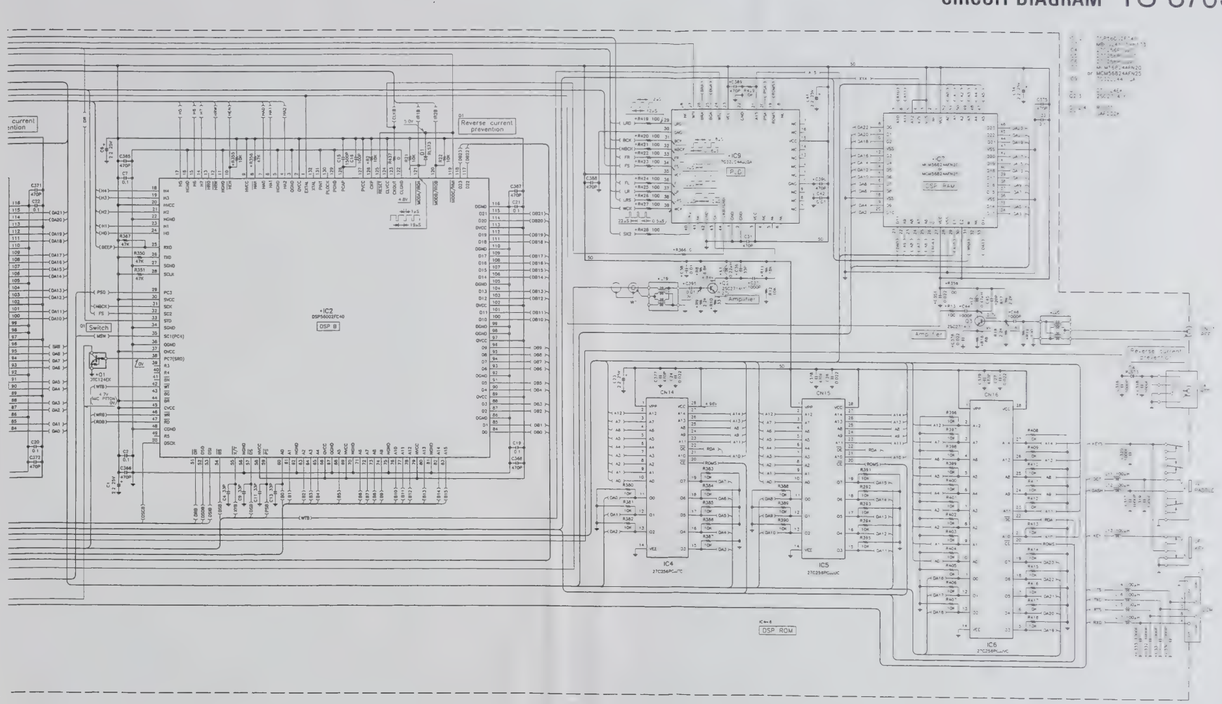

Note) • Ref. No. : Parts of pattern 1.

168A

168B

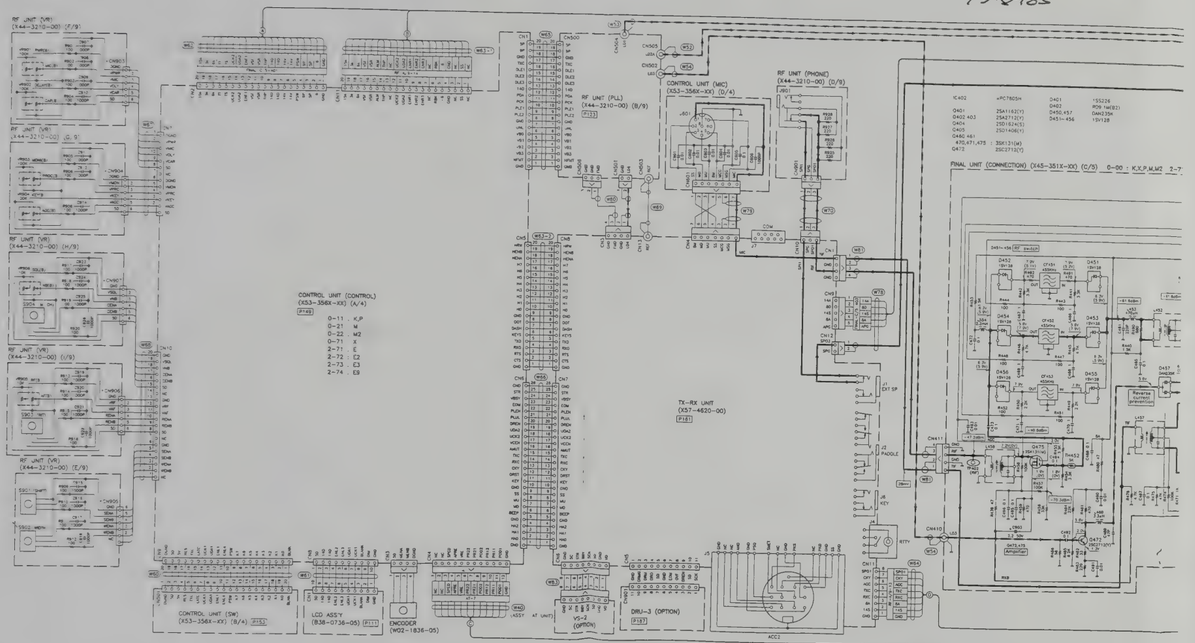
RF UNIT (VR)
(X44-3210-00) (F/9)
RF UNIT (VR)
(X44-3210-00) (G/9)
RF UNIT (VR)
(X44-3210-00) (H/9)
RF UNIT (VR)
(X44-3210-00) (I/9)
RF UNIT (VR)
(X44-3210-00) (E/9)
RF UNIT (PLL)
(X44-2210-00) (B/9)
CONTROL UNIT (MC)
(X53-3560-XX) (D/4)
RF UNIT (PHONE)
(X44-3210-00) (D/9)
CONTROL UNIT (CONTROL)
(X53-3561-XX) (A/4)
TX-RX UNIT
(X57-4620-00)
FINAL UNIT (CONNECTION) (X45-351X-XX) (C/5) 0-00 : K,X,P,M,M2 2-7
CONTROL UNIT (SW)
(X53-3561-XX) (B/4)
LCD ASSY
(X38-0736-05)
ENCODER
(W02-1836-05)
VS-2
(OPTION)
DRU-3 (OPTION)
AT UNIT
ACC2

178A

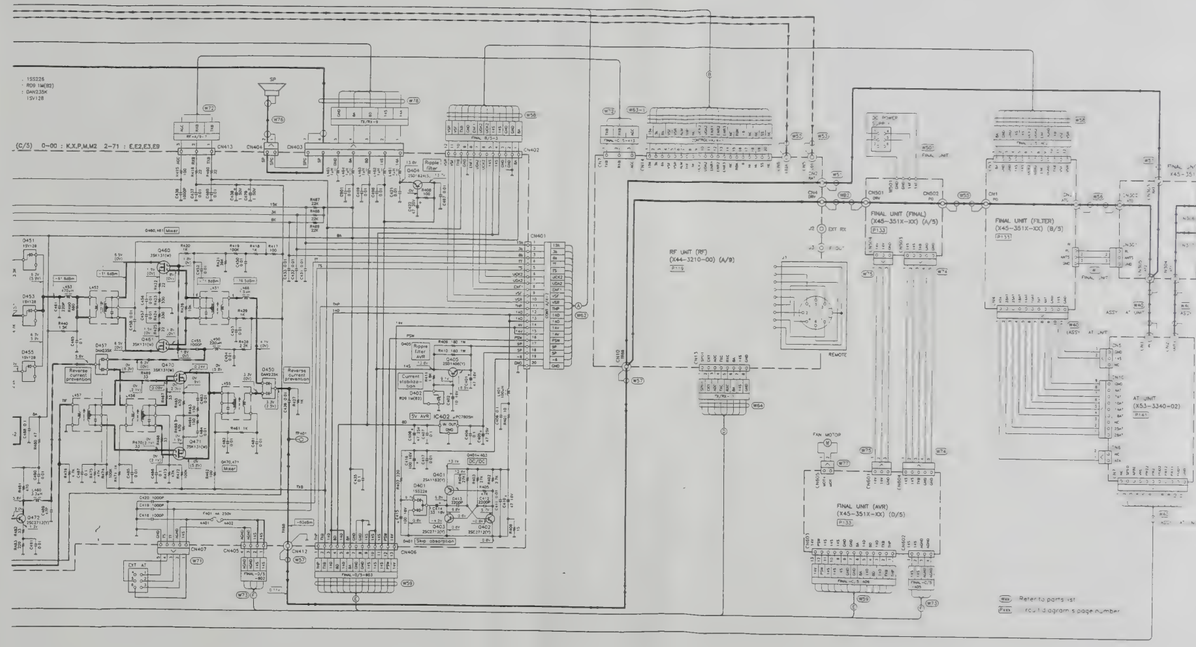
(C/5) 0-00 : K,X,P,M,M2 2-7 1 : E,E2,E3,E9
SP
RF UNIT (RF)
(X44-3210-00) (A/9)
FINAL UNIT (FINAL)
(X45-351X-XX) (A/5)
FINAL UNIT (FILTER)
(X45-351X-XX) (B/5)
FINAL UNIT (AVR)
(X45-351X-XX) (D/5)
AT UNIT
(X53-3240-02)
REMOTE
Fan MOTOR
Return to parts list
Return to diagram's page number

178B

BLOCK DIAGRAM

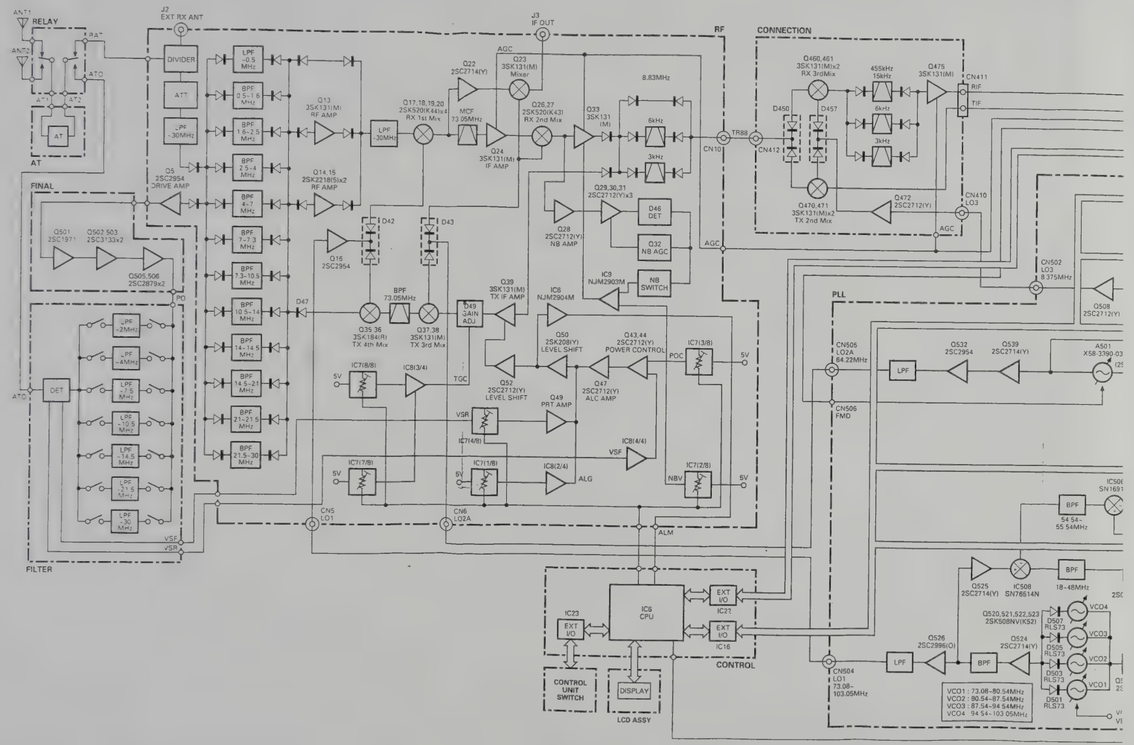

TS-870S TS-870S

BLOCK DIAGRAM

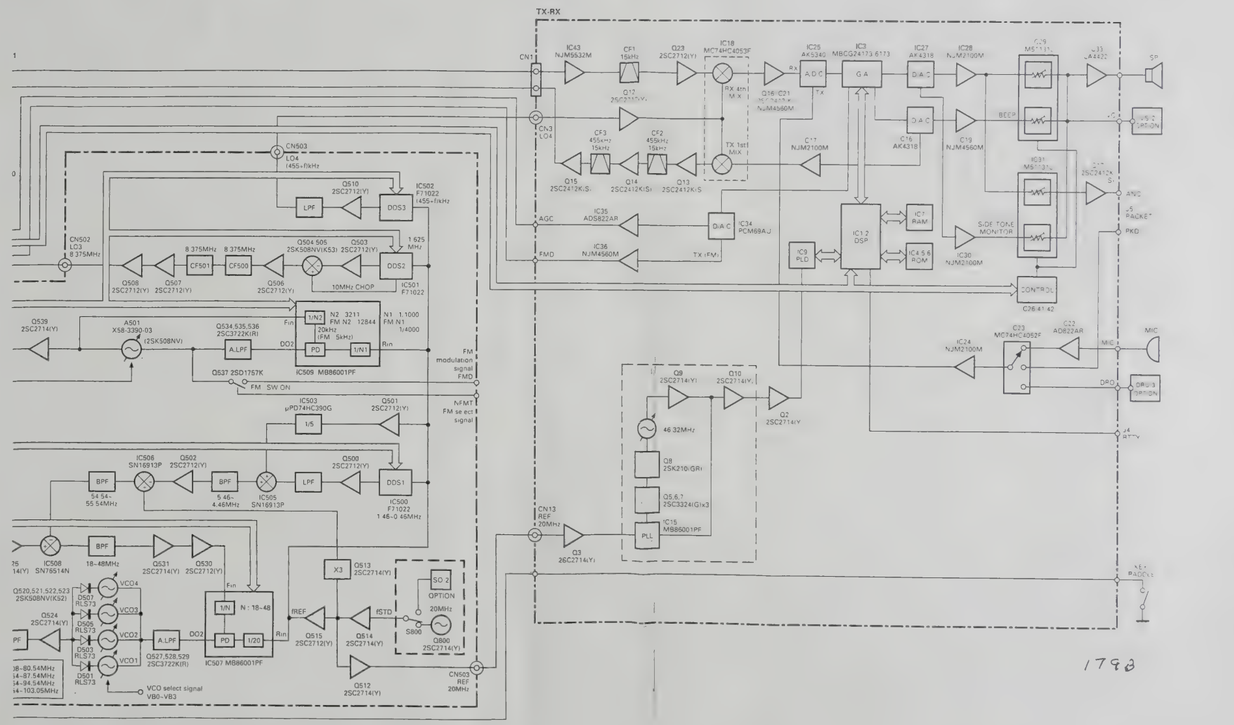

LEVEL DIAGRAM

Receiver Section

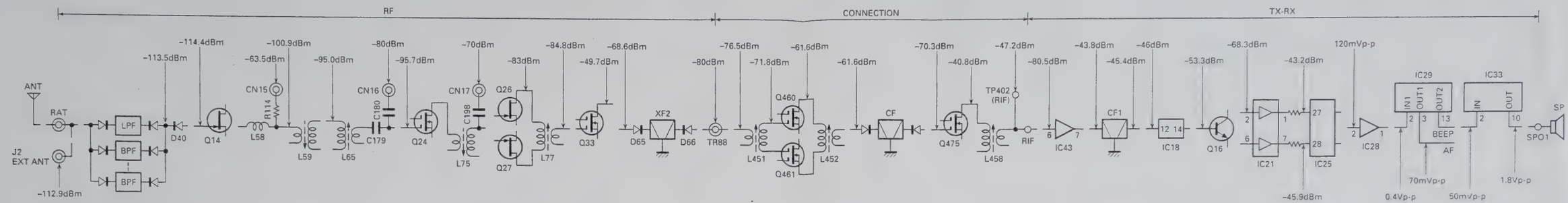

■ Measurement condition

Frequency : 14.2MHz
ANT input : –113dBm
AF output : 0.63V/8Ω, 1kHz

1. The figures shown are signal generator output required for a constant audio output with a constant AF gain control setting. Set the AF gain control for 0.63V/8Ω audio output at –113dBm signal generator input at 14.200MHz.
2. To measure signal generator output connect a 0.01μF capacitor between the signal generator and the check point.
3. AIP : OFF

Transmitter Section

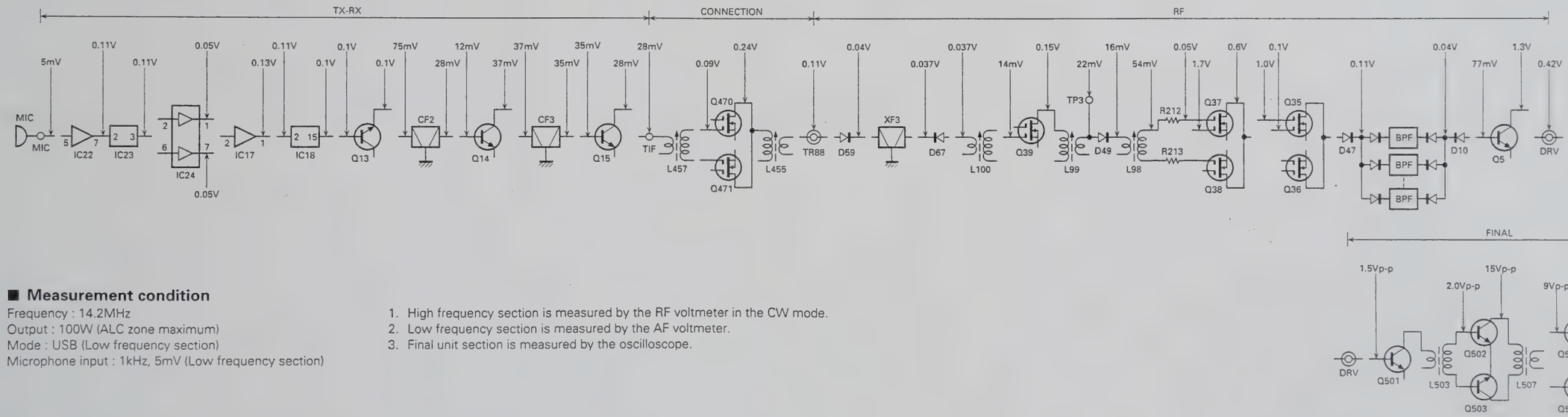

■ Measurement condition

Frequency : 14.2MHz
Output : 100W (ALC zone maximum)
Mode : USB (Low frequency section)
Microphone input : 1kHz, 5mV (Low frequency section)

1. High frequency section is measured by the RF voltmeter in the CW mode.
2. Low frequency section is measured by the AF voltmeter.
3. Final unit section is measured by the oscilloscope.

DRU-3 (DIGITAL RECORDING UNIT)

DRU-3 External View

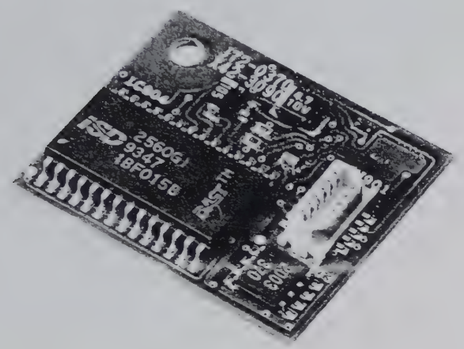

DRU-3 Parts List

Ref. No.	Address	New parts	Parts No.	Description	Destination
ACCESSORY UNIT (X42-3090-20)					
C901,902			CK73FB1H103K	CHIP C 0.010UF K	
C903			CK73FF1E104Z	CHIP C 0.1UF Z	
C905			CK73GB1H103K	CHIP C 0.010UF K	
C906			C92-0004-05	TAN C 1.0UF 16WV	
C907			CK73GB1H102K	CHIP C 1000PF K	
C908			C92-0009-05	TAN C 4.7UF 10WV	
C909			CK73GB1H103K	CHIP C 1000PF K	
CN901		*	E40-5748-05	PIN CONNECTOR (11P)	
R901,902			RK73GB1J103J	CHIP R 10K J 1/16W	
R903			RK73GB1J223J	CHIP R 22K J 1/16W	
R904			RK73GB1J103J	CHIP R 10K J 1/16W	
R905			RK73GB1J474J	CHIP R 470K J 1/16W	
R906,907			RK73GB1J103J	CHIP R 10K J 1/16W	
R908			R92-1252-05	CHIP R 0 OHM	
IC901,902			MB88306PF	IC	
IC903			M62003FP	IC	
IC904		*	ISD2560GI	IC	
IC905		*	TC74HC112AF	IC	

DRU-3 PC Board Views

Component side view

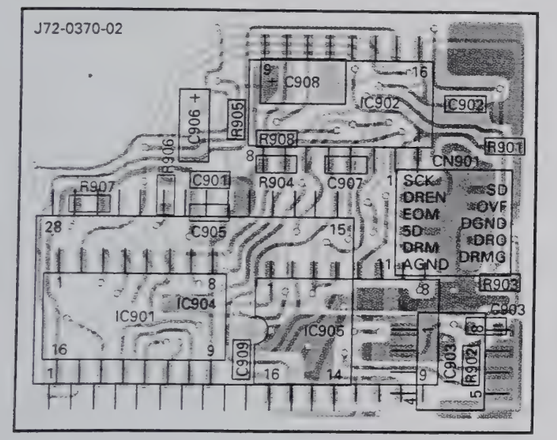

Foil side view

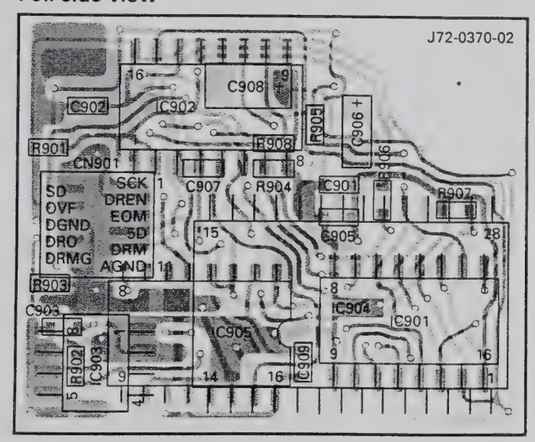

Component side
Foil side

TS-870S

DRU-3 (DIGITAL RECORDING UNIT)

Overview

The DRU-3 is an optional digital audio recording/playback unit for the TS-870S. It has the following features.

- Record transmit tone (main unit MIC input)
- Playback recording from the speaker or output as transmit modulation signal

Operation

■ Recording transmit tone (MIC input)

The microphone input signal from the DRM pin is input to IC904 (ISD2560GI) and recorded. The timing of each port is as follows.

The input address is set by pins 1 (A0) to 10 (A9) of IC904 (ISD2560GI). When pin 27 (P/R) is LOW, the signal is recorded while pin 23 (CE) is LOW.

■ Playback as transmit signal

The record signal is played from pin 14 (SP+) of IC904 (ISD2560GI). The timing of each port is as follows.

The playback address is set by pins 1 (A0) to 10 (A9) fo IC904. When pin 27 (P/R) is HIGH, the signal is played back when pin 23 (CE) goes LOW. When playback ends, a LOW pulse is output from pin 25 (EOM). This pulse is latched by IC905 (TC74HC112AF), and pin 5 (1Q) of IC905 is kept HIGH. The microcomputer checks pin 5 of IC905, and pin 15 (1CLR) of IC905 is made LOW by the IC902 serial-to-parallel converter. Pin 5 of IC905 goes LOW and processing ends.

Recording transmit tone (MIC input)

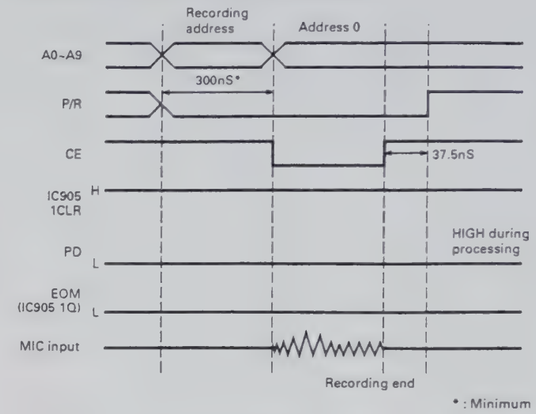

Playback as transmit signal

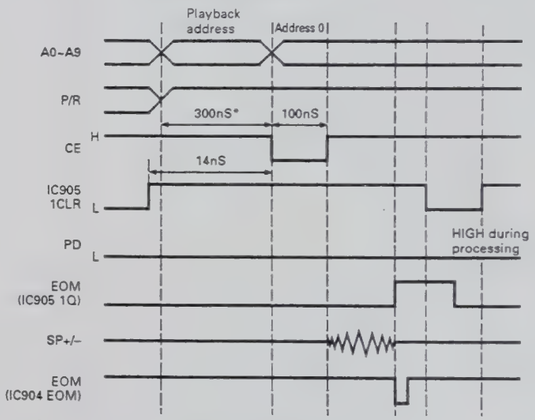

Timing waveform

I/O Map (IC904: ISD2560GI)

Pin No.	Port name	Pin name	I/O	Function	AL (active level)	Initial state
1~10	A0~A9		I	Address input		
11	AUX			Unused		
12	Vssd		I	Digital ground		
13	Vssa		I	Analog ground		
14	SP+	DRO	O	Speaker analog output		
15	SP–			Unused		
16	Vcca		I	5 V		
17	MIC	DRM	I	Analog microphone input		
18	Mref	DRMG	I	Microphone reference		
19	AGC		I			
20	ANAin		I			
21	ANAout		O			
22	OVF		O	Overflow signal output	L	H
23	CE		I		L	H
24	PD		I	Interrupt processing	L	H
25	EON		O	End of Message output	L	H
26	Xclk		I	Unused		
27	P/R		I	Playback/record control signal "L" : Playback, "H" : Record.		
28	Vccd		I	5V		

ORIGNLS —

- FIRST T Double-sided
- 2/ more simple sided.

IN ORDER THAT WAY ~~FOR~~ FOR COPYING!

CIRCUIT DESCRIPTION

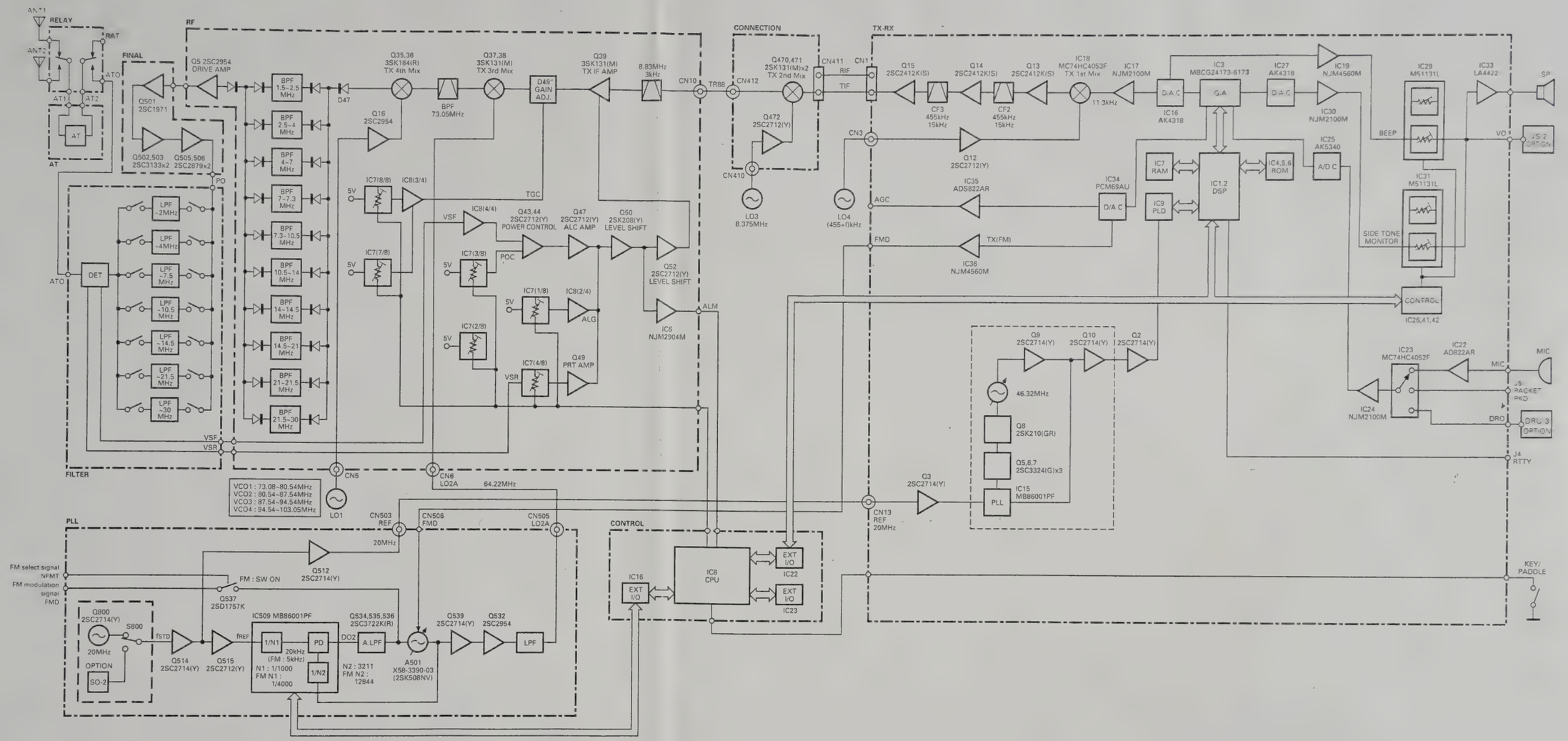

Fig. 7 Transmitter block diagram

CIRCUIT DESCRIPTION

■ Various control circuits by the digital to analog converter

The circuits whose signal levels were varied with volume controls or adjusted with semi-fixed volumes can be controlled with a microcomputer by using an 8-channel digital to analog converter.

The digital-to-analog converter (M62363FP) is a ladder-type variable attenuator with 8-channel independent inputs, which is used to output an output voltage by entering a fixed voltage, or is used as for volume by entering the control signals directly. Table 8 lists controls in each channel.

CH No.	PIN No.	Signal name	Control	Output to
1	2	ALG	ALC reference voltage	IC8-5 operational amplifier
2	3	NBV	NB threshold voltage	IC9-5 NB pulse generation circuit
3	10	POC	Power control reference voltage	Q43 ALC circuit differential input section
4	11	PRO	Reflected wave protection adjustment	Q49 protection control circuit
5	14	Unused		
6	15	Unused		
7	22	POVR	Gain correction for power control	IC8-10 TGC circuit
8	23	TXG	Gain correction between bands	IC8-9 TGC circuit

Table 8 digital-to-analog converter control

■ ALC circuit

The TS-870S uses the same control circuit as for the TS-850 as shown in Figure 8. Q43 and Q44 comprise a differential amplifier, and the VSF (forward wave voltage) signal is compared with the IC7-VO3 power control voltage (POC). The POC voltage is controlled by the microprocessor according to the power settings, such as power volume and mode-specific power down.

Q45 is a switch for average power control during AM transmission. In modes other than AM, the ALC is controlled by detecting the peak value, but in AM mode, a control output smoothing circuit is used to control output power with the average power.

In AM mode, the AMB signal and the base of Q46 go HIGH. The collector of Q48 goes HIGH, and about a 20ms pulse is input to the base of Q51 to turn it ON. Since Q45 is still OFF immediately after transmission starts, the ALC is controlled by detecting the peak value. However, average value control is used after about 20ms, and the average output does not change when modulation occurs. If the ALC is controlled by the average value soon after transmission starts, the ALC voltage does not stabilize for awhile and the preset power is exceeded. Thus, the ALC is controlled by detecting the peak value soon after transmission starts.

The differential amplifier output level is converted by Q47, Q50, and Q52, and the gain is controlled by the second gate of the Q39 ALC amplifier.

Q49 controls SWR protection using the adjusted VSR (reflected wave voltage) signal.

The level of the voltage taken from the ALC circuit is converted by IC6 (B/2) and the ALC meter signal is output to the A/D port of the control unit as the ALM signal. The ALC meter is adjusted so that it indicates a value according to the DSP output level set in the adjustment mode.

■ Transmission gain control

If transmission occurs with several bands as with an HF transceiver, the gain changes between bands due to the effects of frequency characteristics of the final unit, low-pass filter, or mixer circuit, and the CAR level must be adjusted each time the band is changed.

This model uses a pin diode variable ATT and microprocessor-controlled digital-to-analog converter to correct the total gain between bands and correct the gain with power control. Thus, the total gain is the same in each band.

TS-870S

CIRCUIT DESCRIPTION

■ CAR control

The CAR volume signal is read by the analog to digital converter and output to the DSP via the microprocessor. The DSP controls the output level required according to the mode. If PROC is OFF in SSB mode and in FM mode, the level is fixed, but in other modes it can be adjusted in the 30-dB range using the CAR control.

The level required for each adjustment is output in the adjustment mode to facilitate adjustment.

■ Final circuit

The drive output from the CN4 of the RF unit is input to CN501 of the final section (X45-351 A/5). The harmonics of the signal amplified to 100W by Q501 to Q505 are attenuated by a low-pass filter in the filter section (X45-351 B/5), and the resulting signal goes to the relay section (X45-351 E/5).

The transmit signal input to the relay section is passed through the transmit/receive switching relay, the through/in relay in the AT unit (X53-3340-02), and the ANT A/B switching relay, and goes to the ANT terminal.

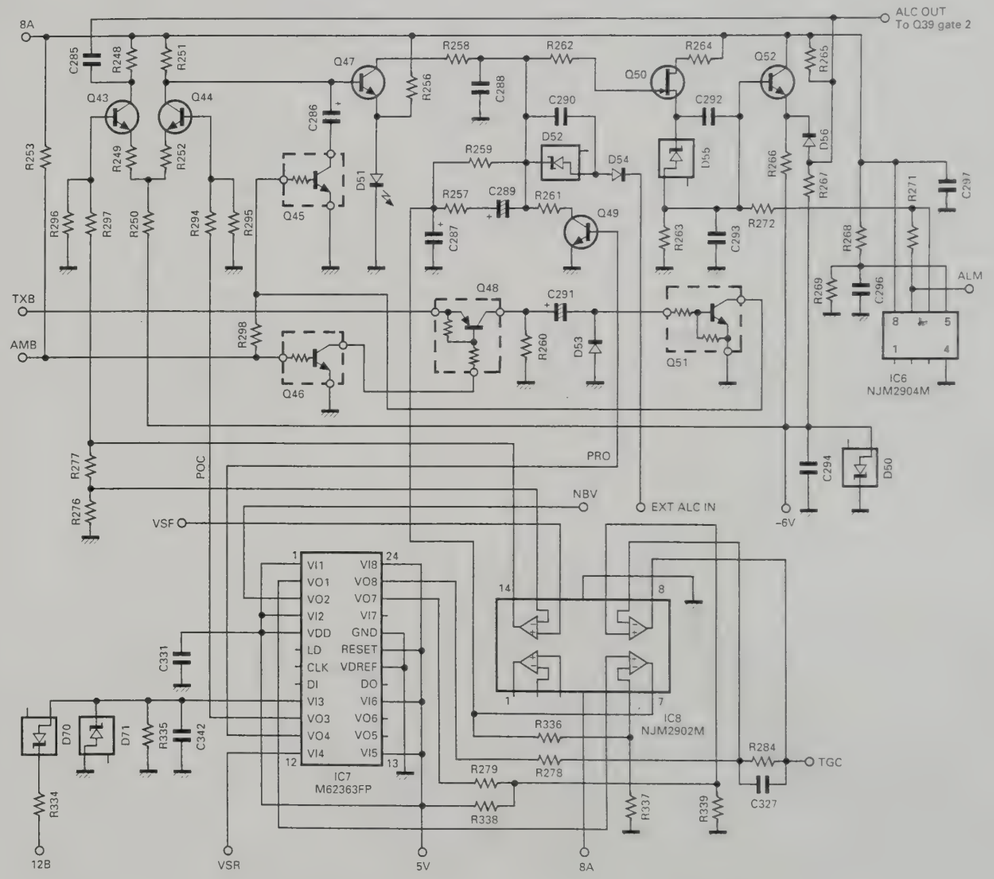

Fig. 8 ALC circuit

EXPLODED VIEW

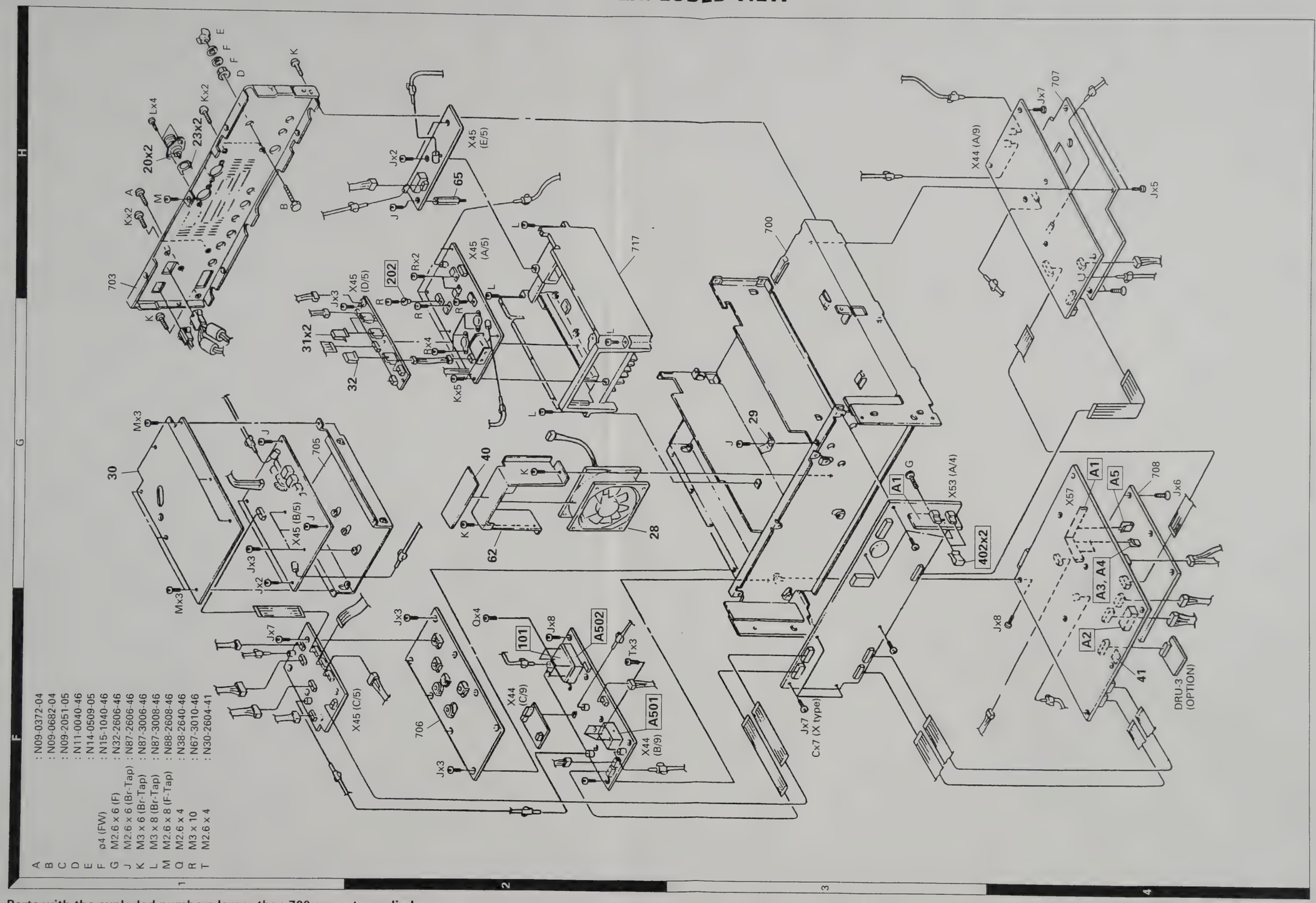

Parts with the exploded numbers larger than 700 are not supplied.

IS-870S IS-870S

EXPLODED VIEW

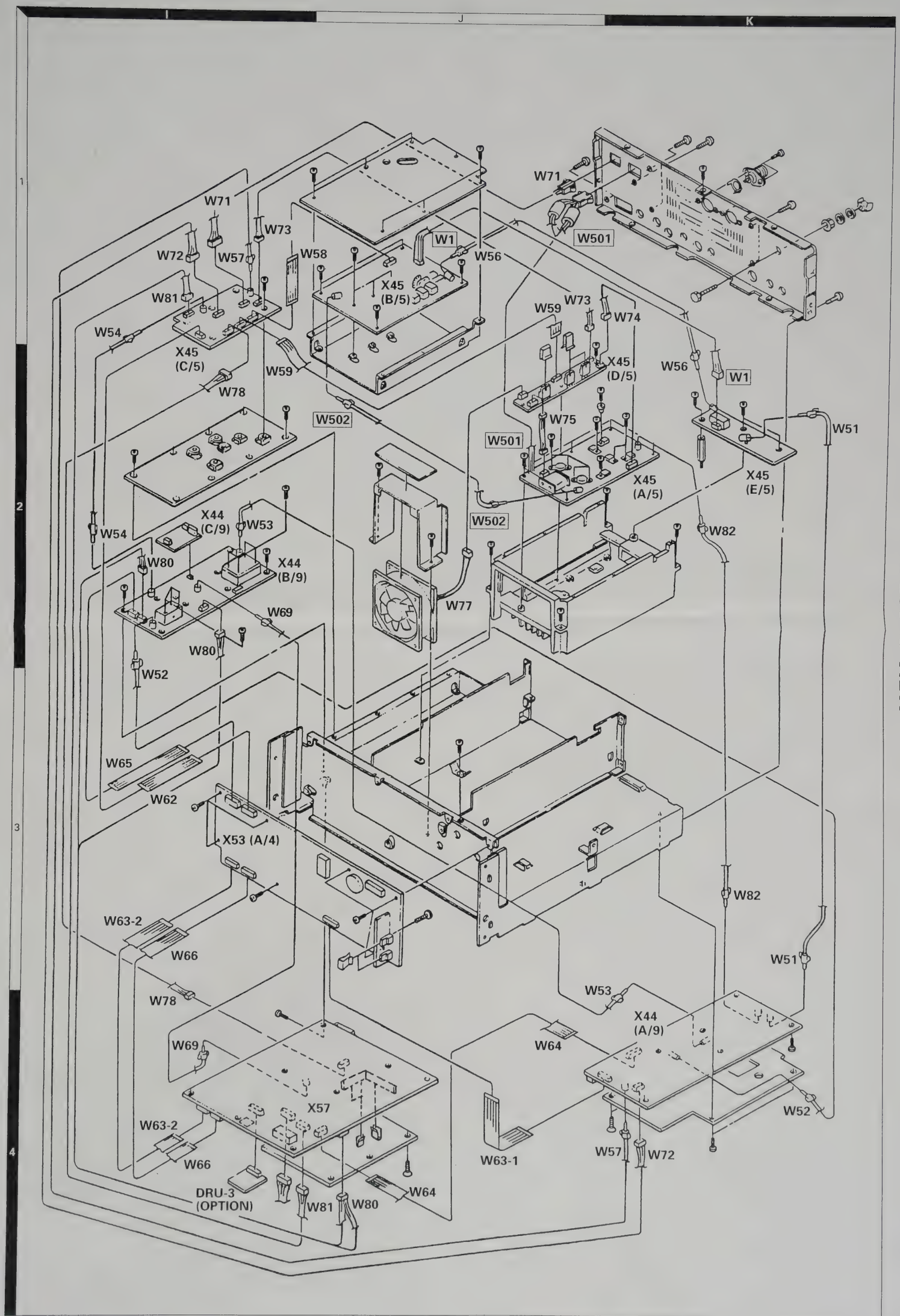

RF UNIT (X44-3210-00) (A/9) : RF Foil side view

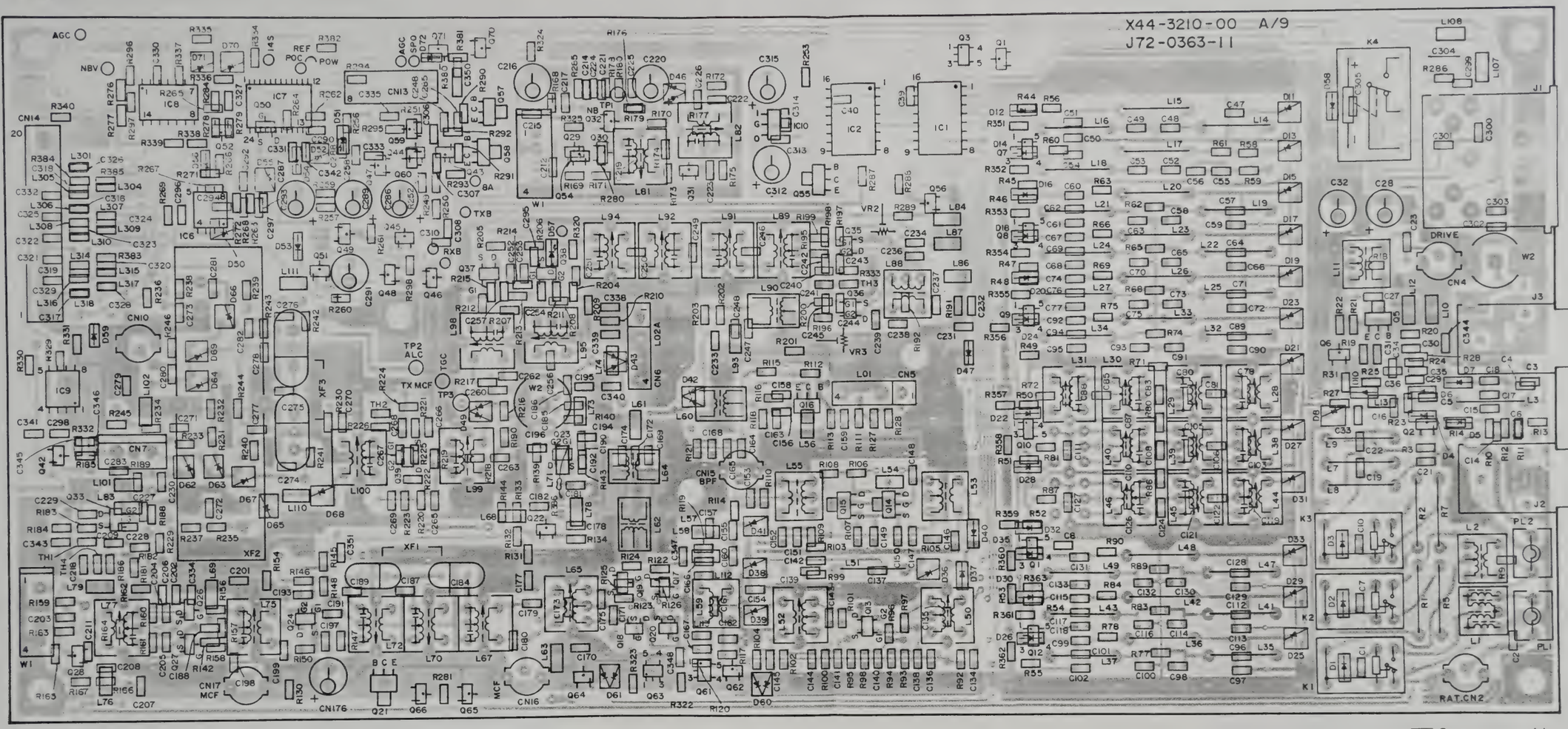

NJM2903M
NJM2904M

NJM2902M

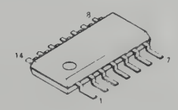

TC9174F

M62363FP

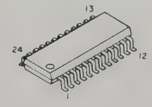

TS-870S PC BOARD VIEWS

RF UNIT (X44-3210-00) (B/9) : PLL Component side view

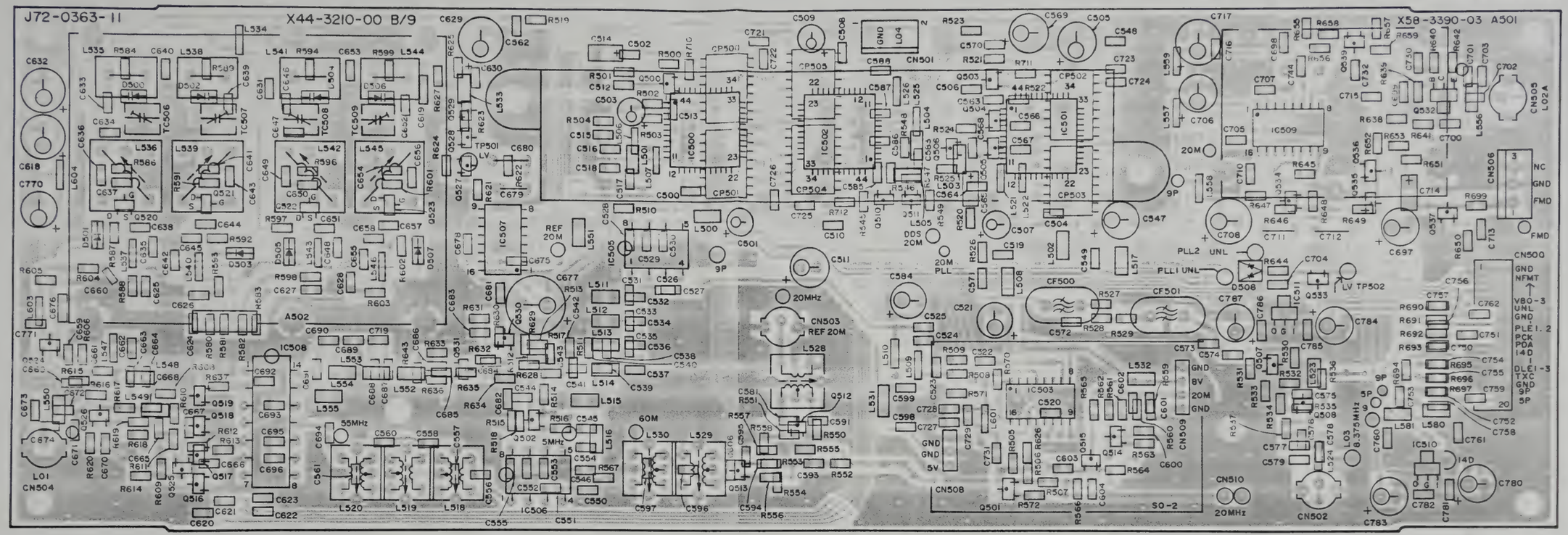

RF UNIT (X44-3210-00) (B/9) : PLL Foil side view

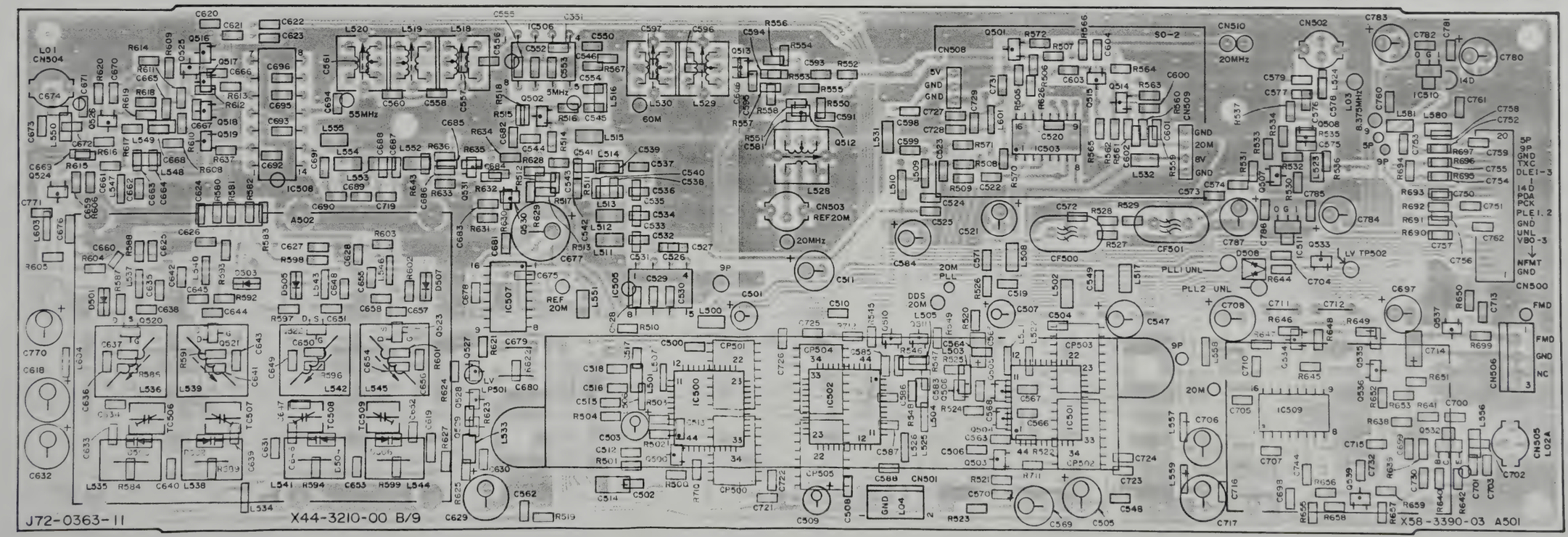

LCD ASSY (B38-0736-05)

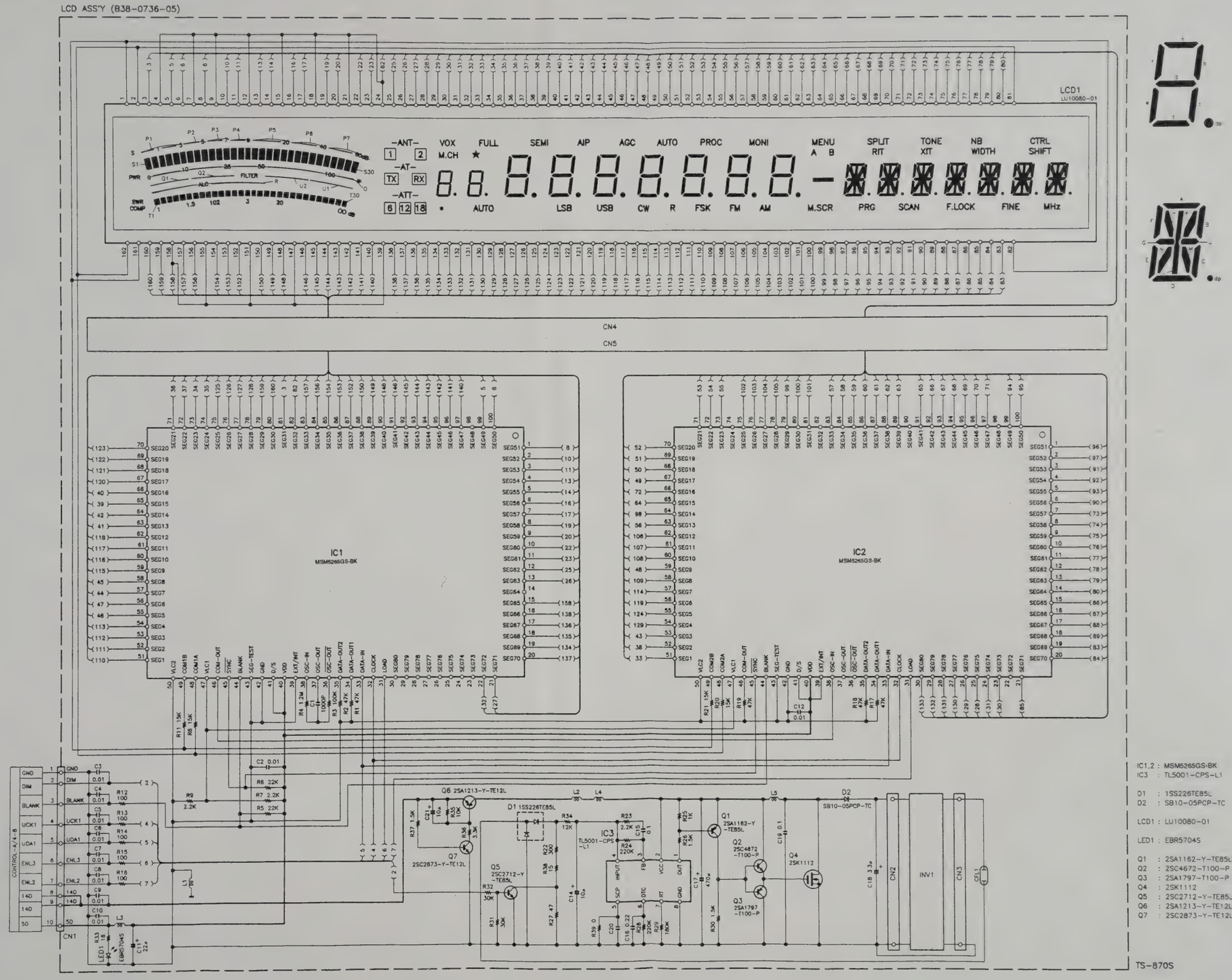

TS-870S PC BOARD VIEW

RF UNIT (X44-3210-00) (A/9) : RF Component side view

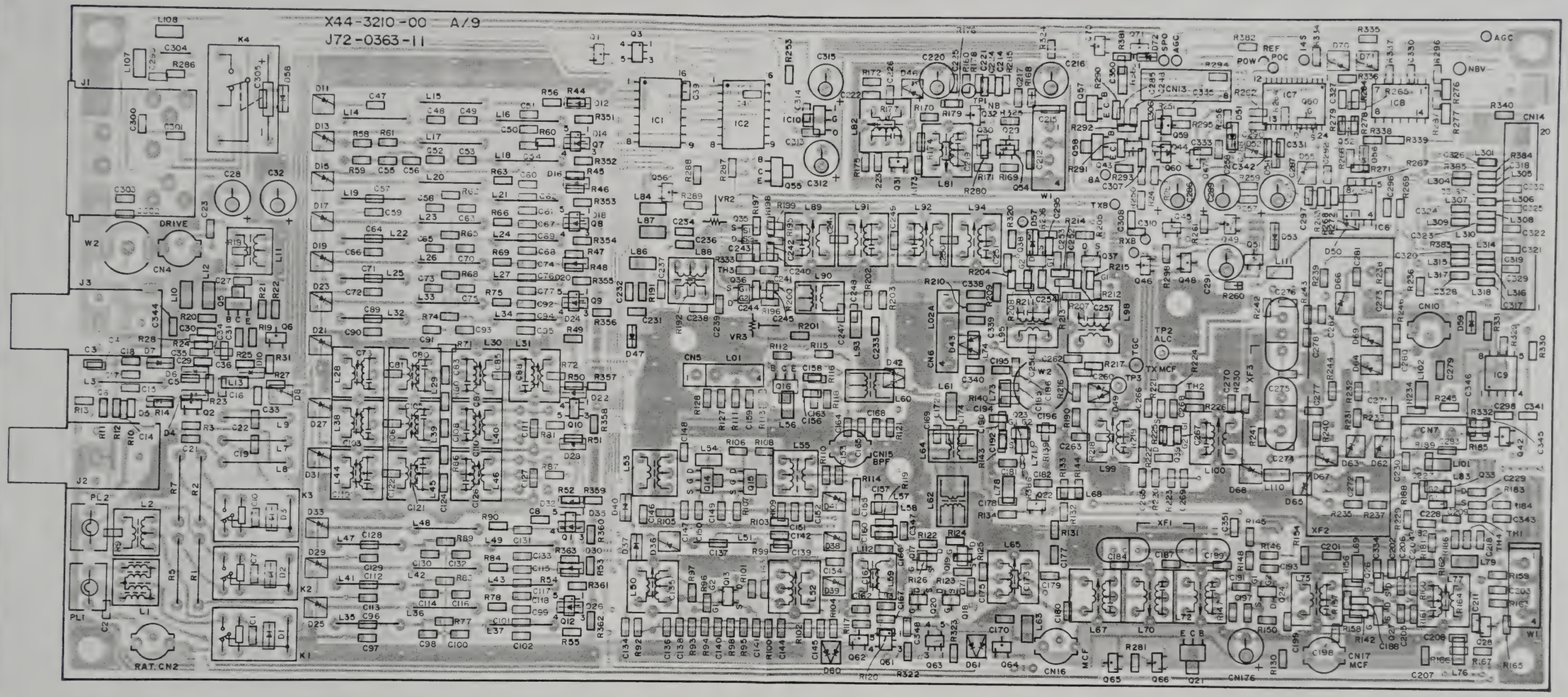

Component side
Foil side

DTA114EK DTC143EK
DTA124EK DTC143TK
DTA143EK 2SA1162
DTC114EK 2SC2712
DTC124EK 2SC2714

2SC2954
2SD1624
2SB1188

2SK2218

2SK208
2SK520

3SK131
3SK184

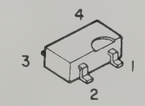

FMA1
FMC3
FMG4

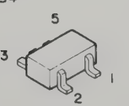

NJM78L05UA

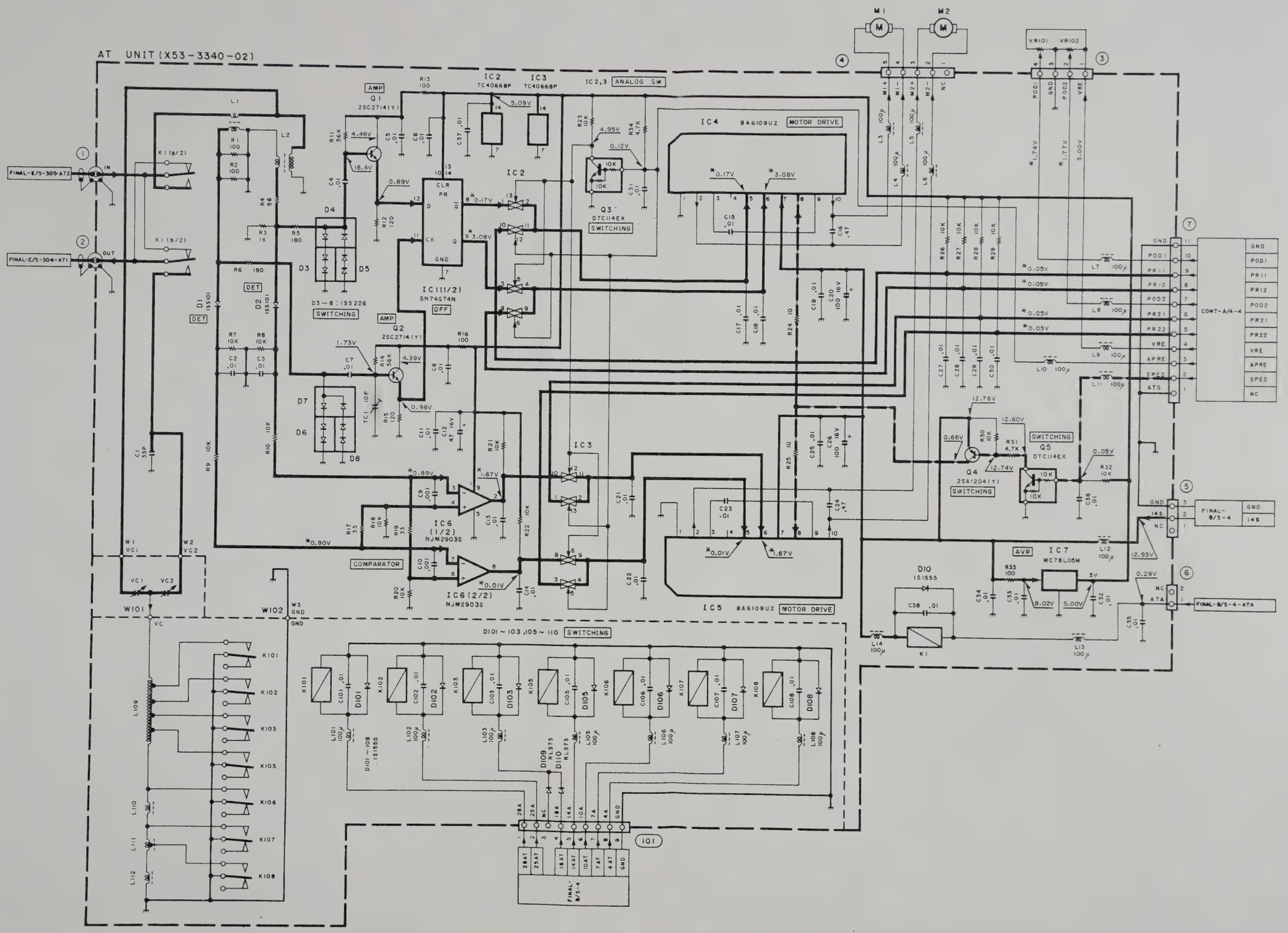
AT UNIT (X53-3340-02)
M1
M2
VR101
VR102
IC2
TC4066BP
IC3
TC4066BP
IC2,3 ANALOG SW
IC4 BA6109U2 MOTOR DRIVE
Q1 2SC2714(Y)
Q2 2SC2714(Y)
Q3 DTC114EK SWITCHING
Q4 2SA1204(Y) SWITCHING
Q5 DTC114EK SWITCHING
IC1(1/2) SN74S74N DFF
IC6(1/2) NJM2903S COMPARATOR
IC6(2/2) NJM2903S
IC5 BA6109U2 MOTOR DRIVE
IC7 MC78L05M AVR
D3~8 : 1SS226 SWITCHING
D101~103,105~110 SWITCHING
D101~108 1S1555
D109 RLS73
D110 RLS73
D10 1S1555
K1
K101
K102
K103
K105
K106
K107
K108
W101
W102
W1 VC1
W2 VC2
W3 GND
FINAL-E/5-305-AT2
FINAL-E/5-304-AT1
COMT-A/4-4
FINAL-B/5-4
FINAL-B/5-4-ATA
101
FINAL-B/5-4
IN
OUT
DET
SWITCHING
AMP
COMPARATOR
AVR
SWITCHING
MOTOR DRIVE

TS-870S PC BOARD VIEW

CONTROL UNIT (X53-356X-XX) (A/4) : CONTROL Component side view
0-11 : K,P 0-21 : M 0-22 : M2 0-71 : X 2-71 : E 2-72 : E2 2-73 : E3 2-74 : E9

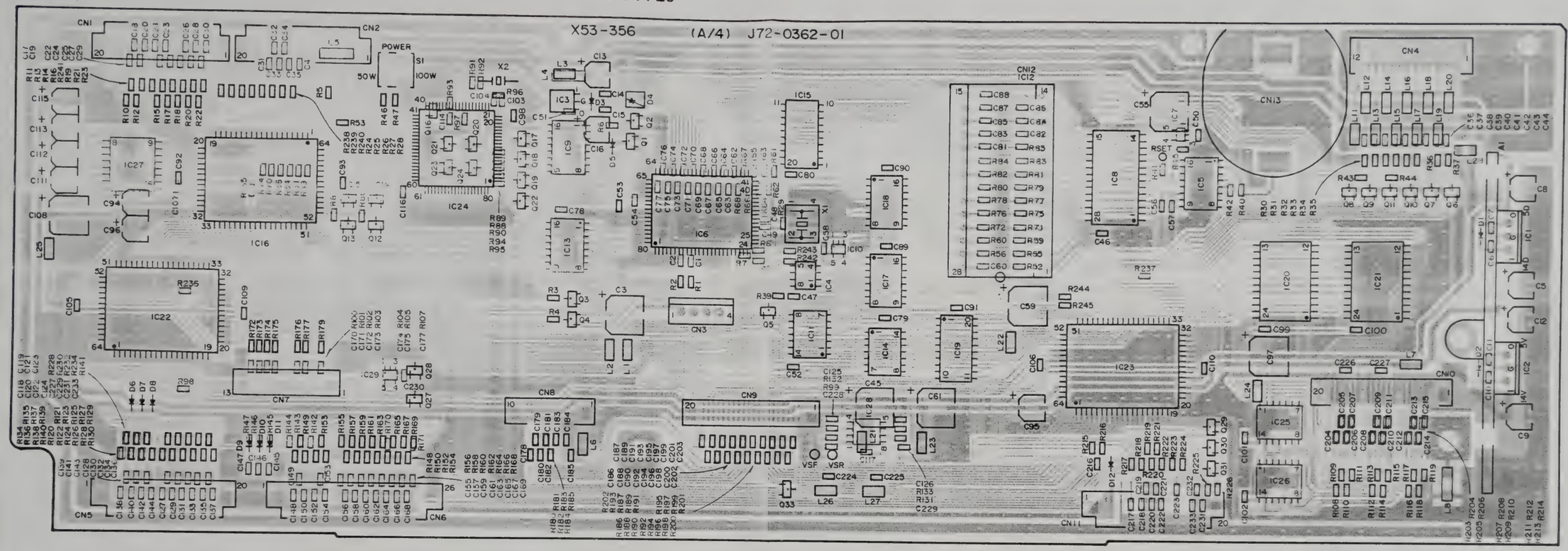

DTA143EK
DTC143EK
DTC114EK
DTC143TK

TA78L08F

UPC7805H

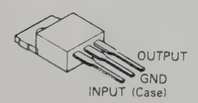

TC7S04F
TC7S32F

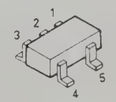

NJM2904M

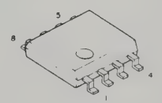

AT2402N10SI2.7

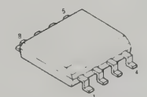

TC74VHC08F
TC74VHC32F

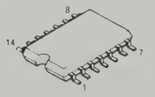

LC3564QMF-10

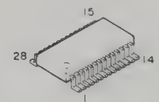

TC4052BF
TC4584BF

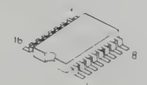

CONTROL UNIT (X53-356X-XX) (B/4) : SW

0-11 : K,P 0-21 : M 0-22 : M2 0-71 : X 2-71 : E 2-72 : E2 2-73 : E3 2-74 : E9

CONTROL UNIT (SW) (X53-356X-XX) (B/4) 0-11:K,P 0-21:M 0-22:M2 0-71:X 2-71:E 2-72:E2 2-73:E3 2-74:E9

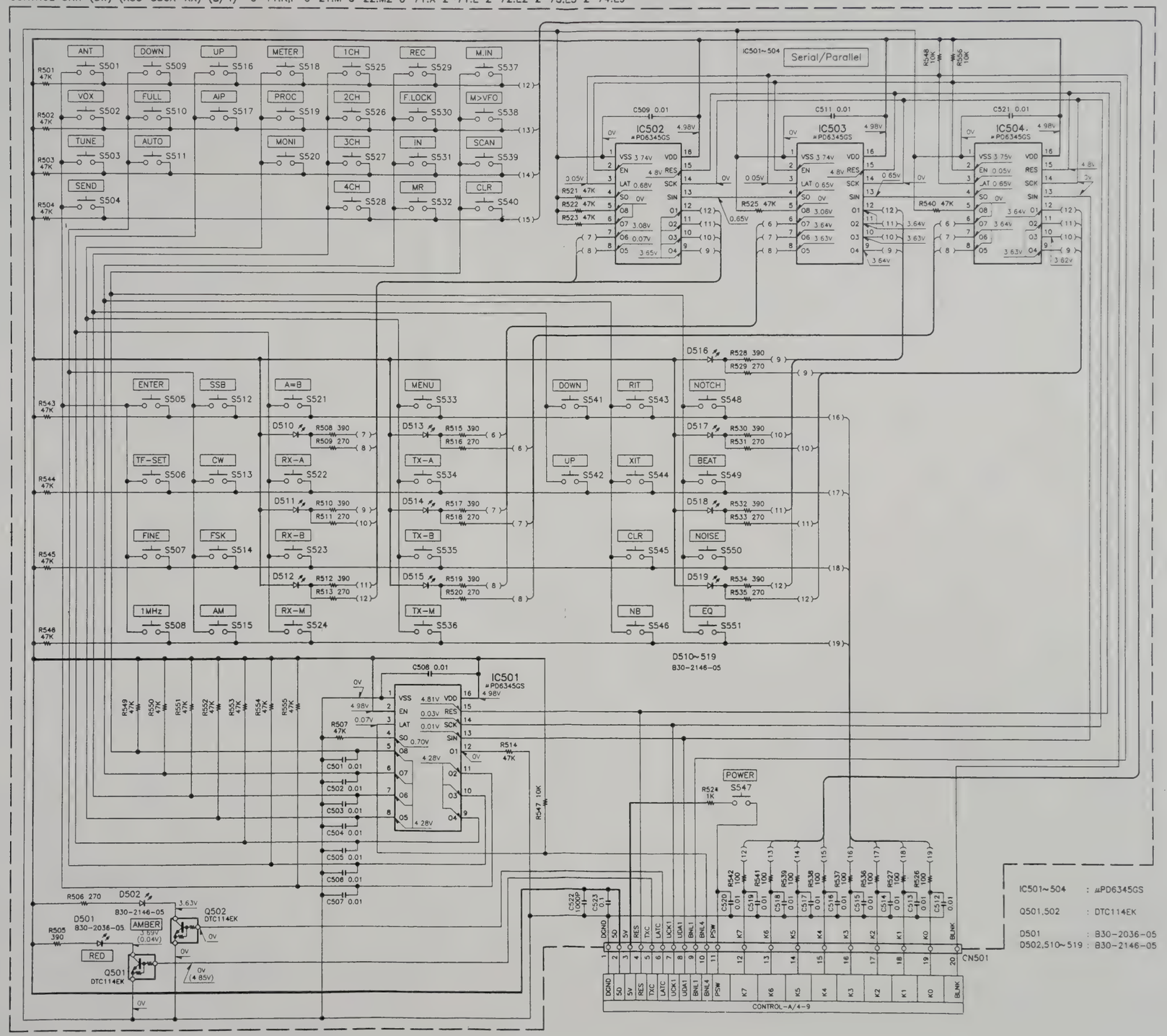

IC501~504 : μPD6345GS

Q501,502 : DTC114EK

D501 : B30-2036-05

D502,510~519 : B30-2146-05

TS-870S PC BOARD VIEW

TX-RX UNIT (X57-4620-00) Component side view

Ref No	Address
IC1	12G
IC2	9G
IC3	8K
IC4	13L
IC5	13N
IC6	13O
IC7	12J
IC9	8O
IC15	5D
IC16	4K
IC18	3I
IC23	5I
IC25	5K
IC26	3N
IC27	4M
IC29	2O
IC31	4O
IC33	4Q
IC34	2M
IC37	7N
IC38	7P
IC44	7O
Q1	9F
Q2	9O
Q4	9F
Q8	2E
Q9	3D
Q10	3D
Q12	2I
Q13	3H
Q14	2H
Q15	3G
Q16	4I
Q22	3P
Q23	4H
Q26	2Q
Q27	2P
D3	5R
D5	4E
D7	9J

Component side

Pattern 1
Pattern 2
Pattern 3
Pattern 4

Foil side

X57-4620-00
J72-0361-12

LEVEL DIAGRAM

Receiver Section

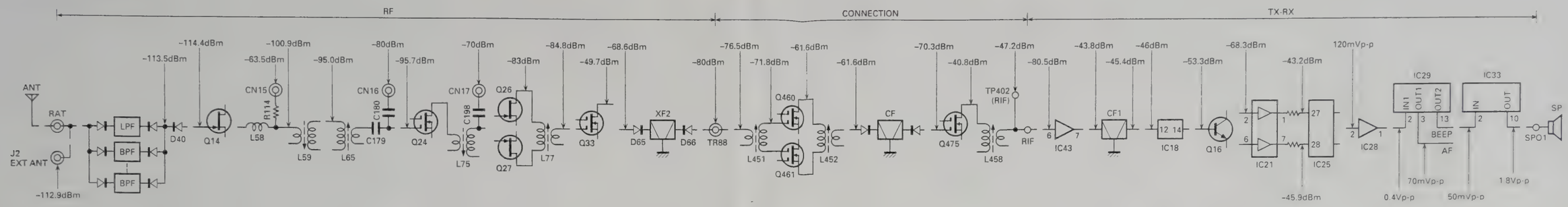

■ Measurement condition

Frequency : 14.2MHz
ANT input : –113dBm
AF output : 0.63V/8Ω, 1kHz

1. The figures shown are signal generator output required for a constant audio output with a constant AF gain control setting. Set the AF gain control for 0.63V/8Ω audio output at –113dBm signal generator input at 14.200MHz.
2. To measure signal generator output connect a 0.01μF capacitor between the signal generator and the check point.
3. AIP : OFF

Transmitter Section

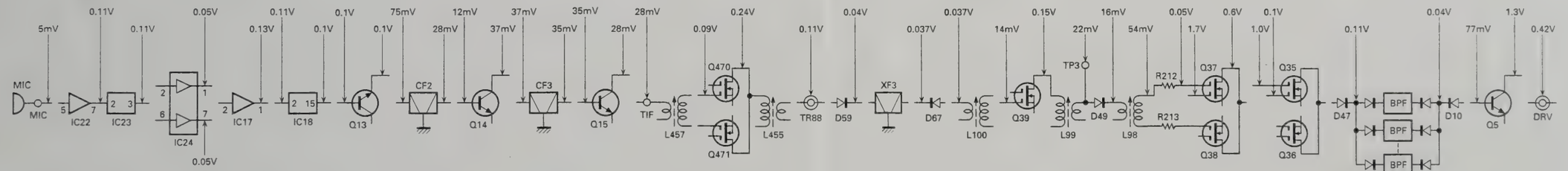

■ Measurement condition

Frequency : 14.2MHz
Output : 100W (ALC zone maximum)
Mode : USB (Low frequency section)
Microphone input : 1kHz, 5mV (Low frequency section)

1. High frequency section is measured by the RF voltmeter in the CW mode.
2. Low frequency section is measured by the AF voltmeter.
3. Final unit section is measured by the oscilloscope.

DRU-3 (DIGITAL RECORDING UNIT)

DRU-3 External View

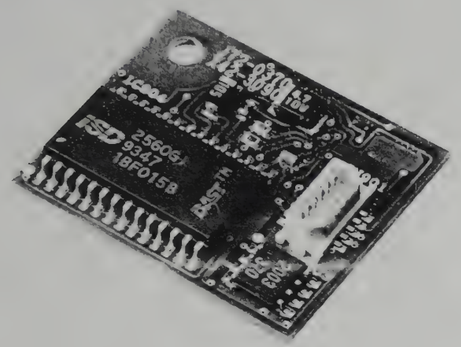

DRU-3 Parts List

Ref. No.	Address	New parts	Parts No.	Description	Destination
ACCESSORY UNIT (X42-3090-20)					
C901,902			CK73FB1H103K	CHIP C 0.010UF K	
C903			CK73FF1E104Z	CHIP C 0.1UF Z	
C905			CK73GB1H103K	CHIP C 0.010UF K	
C906			C92-0004-05	TAN C 1.0UF 16WV	
C907			CK73GB1H102K	CHIP C 1000PF K	
C908			C92-0009-05	TAN C 4.7UF 10WV	
C909			CK73GB1H103K	CHIP C 1000PF K	
CN901		*	E40-5748-05	PIN CONNECTOR (11P)	
R901,902			RK73GB1J103J	CHIP R 10K J 1/16W	
R903			RK73GB1J223J	CHIP R 22K J 1/16W	
R904			RK73GB1J103J	CHIP R 10K J 1/16W	
R905			RK73GB1J474J	CHIP R 470K J 1/16W	
R906,907			RK73GB1J103J	CHIP R 10K J 1/16W	
R908			R92-1252-05	CHIP R 0 OHM	
IC901,902			MB88306PF	IC	
IC903			M62003FP	IC	
IC904		*	ISD2560GI	IC	
IC905		*	TC74HC112AF	IC	

DRU-3 PC Board Views

Component side view

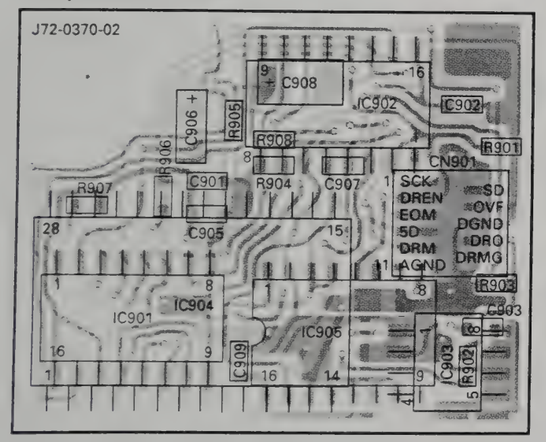

Foil side view

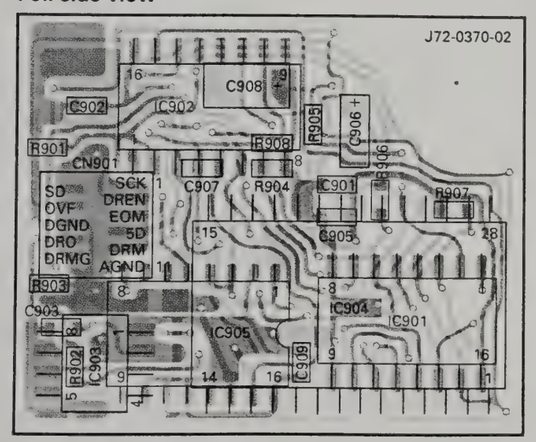

Component side
Foil side

TS-870S

DRU-3 (DIGITAL RECORDING UNIT)

Overview

The DRU-3 is an optional digital audio recording/playback unit for the TS-870S. It has the following features.

- Record transmit tone (main unit MIC input)
- Playback recording from the speaker or output as transmit modulation signal

Operation

■ Recording transmit tone (MIC input)

The microphone input signal from the DRM pin is input to IC904 (ISD2560GI) and recorded. The timing of each port is as follows.

The input address is set by pins 1 (A0) to 10 (A9) of IC904 (ISD2560GI). When pin 27 (P/R) is LOW, the signal is recorded while pin 23 (CE) is LOW.

■ Playback as transmit signal

The record signal is played from pin 14 (SP+) of IC904 (ISD2560GI). The timing of each port is as follows.

The playback address is set by pins 1 (A0) to 10 (A9) fo IC904. When pin 27 (P/R) is HIGH, the signal is played back when pin 23 (CE) goes LOW. When playback ends, a LOW pulse is output from pin 25 (EOM). This pulse is latched by IC905 (TC74HC112AF), and pin 5 (1Q) of IC905 is kept HIGH. The microcomputer checks pin 5 of IC905, and pin 15 (1CLR) of IC905 is made LOW by the IC902 serial-to-parallel converter. Pin 5 of IC905 goes LOW and processing ends.

Recording transmit tone (MIC input)

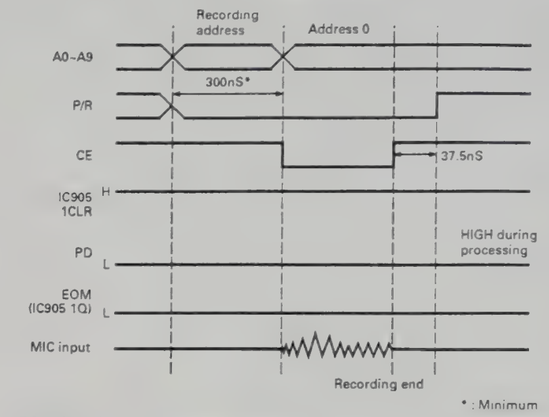

Playback as transmit signal

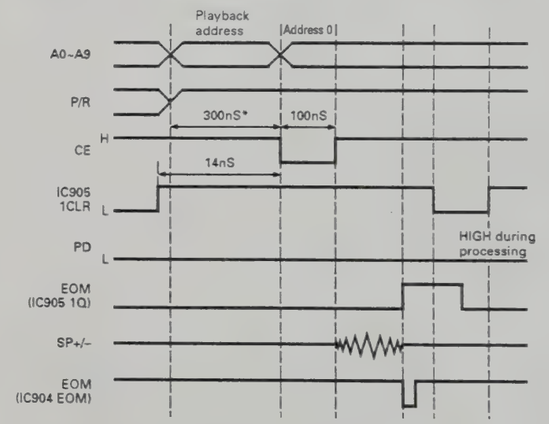

Timing waveform

I/O Map (IC904: ISD2560GI)

Pin No.	Port name	Pin name	I/O	Function	AL (active level)	Initial state
1~10	A0~A9		I	Address input		
11	AUX			Unused		
12	Vssd		I	Digital ground		
13	Vssa		I	Analog ground		
14	SP+	DRO	O	Speaker analog output		
15	SP-			Unused		
16	Vcca		I	5 V		
17	MIC	DRM	I	Analog microphone input		
18	Mref	DRMG	I	Microphone reference		
19	AGC		I			
20	ANAin		I			
21	ANAout		O			
22	OVF		O	Overflow signal output	L	H
23	CE		I		L	H
24	PD		I	Interrupt processing	L	H
25	EON		O	End of Message output	L	H
26	Xclk		I	Unused		
27	P/R		I	Playback/record control signal "L" : Playback, "H" : Record.		
28	Vccd		I	5V		

TS-870S PC BOARD VIEWS

AT UNIT (X53-3340-02) (A/2) Component side view

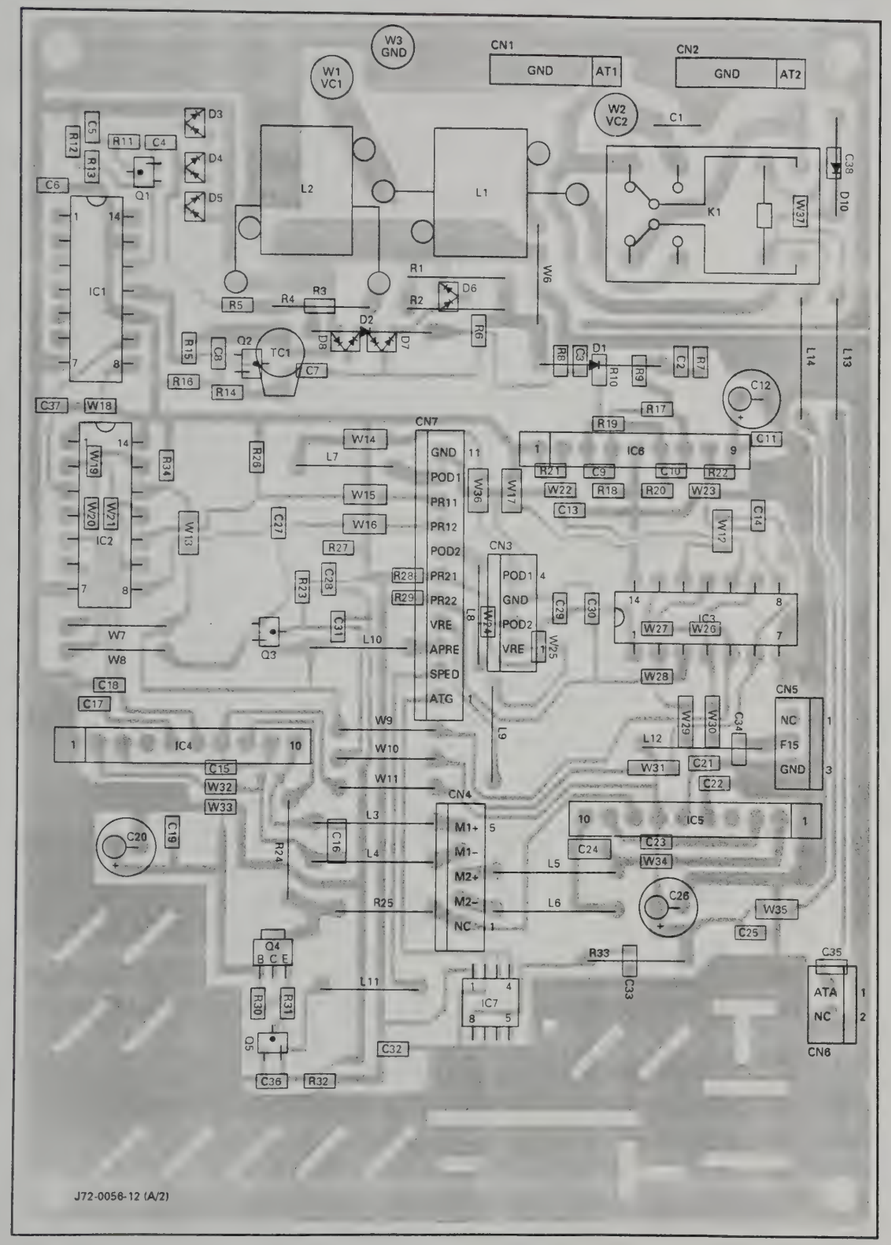

AT UNIT (X53-3340-02) (A/2) Foil side view

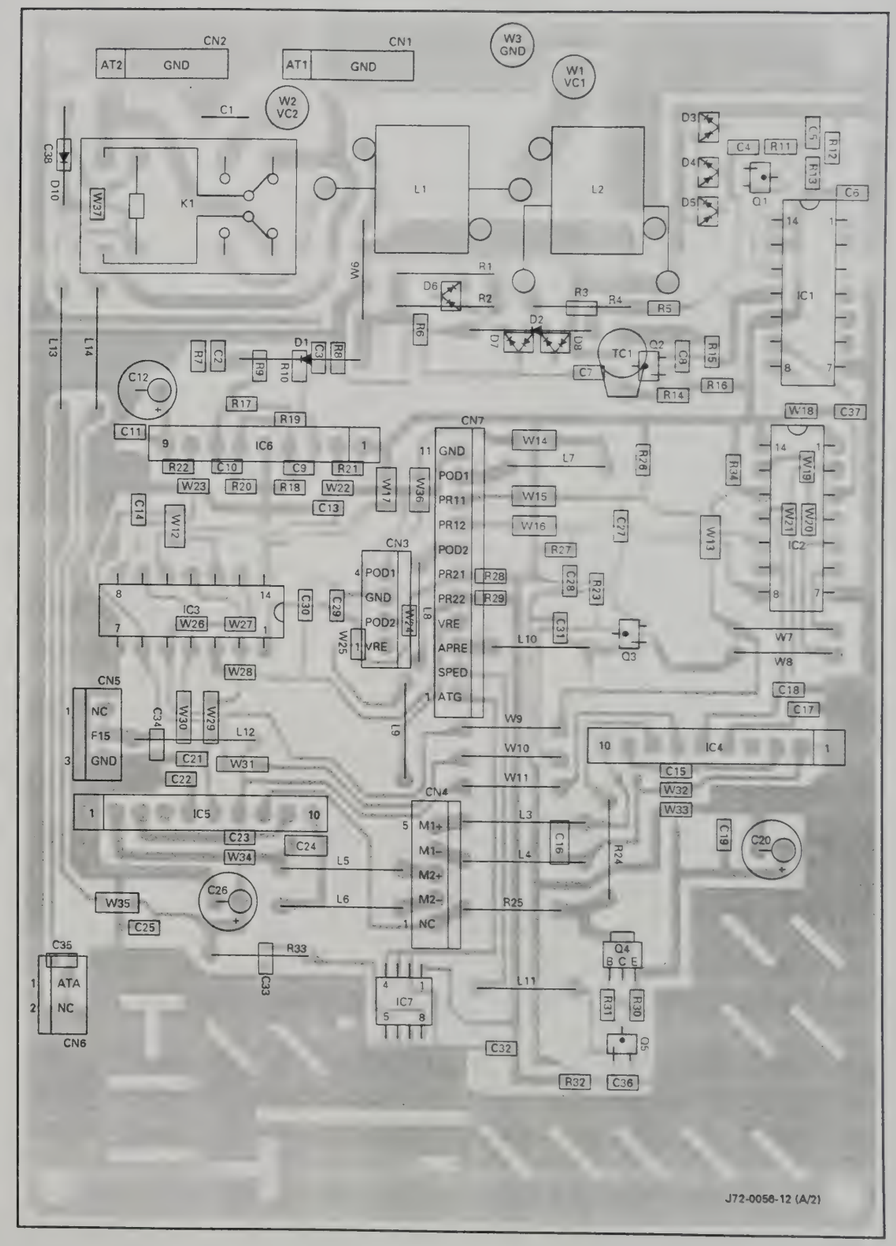

2SC2714
DTC114EK

2SA1204

MC78L05M

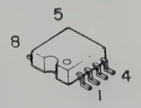

NJM2903S

BA6109U2

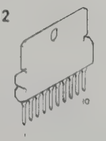

TC4066BP

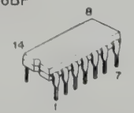

SN74S74N

AT UNIT (X53-3340-02) (B/2) Component side view

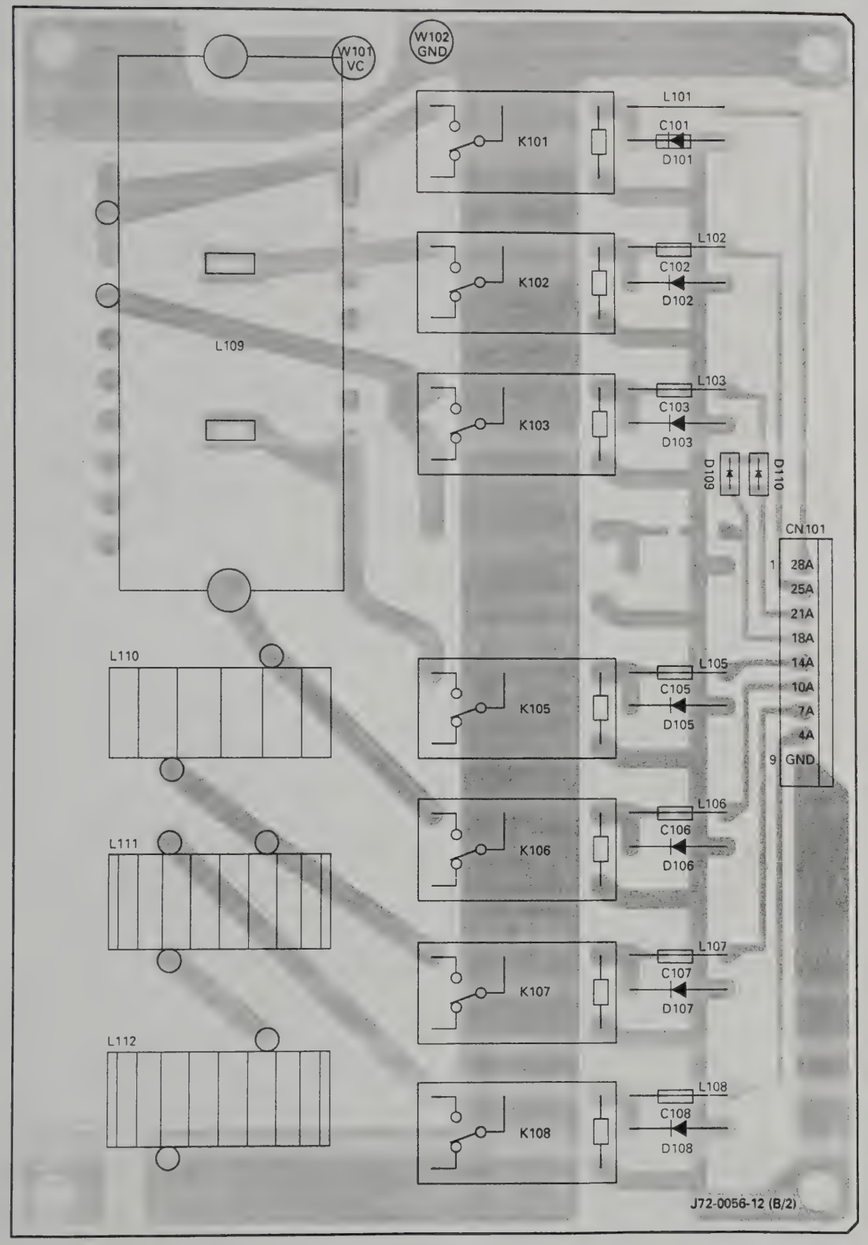

AT UNIT (X53-3340-02) (B/2) Foil side view

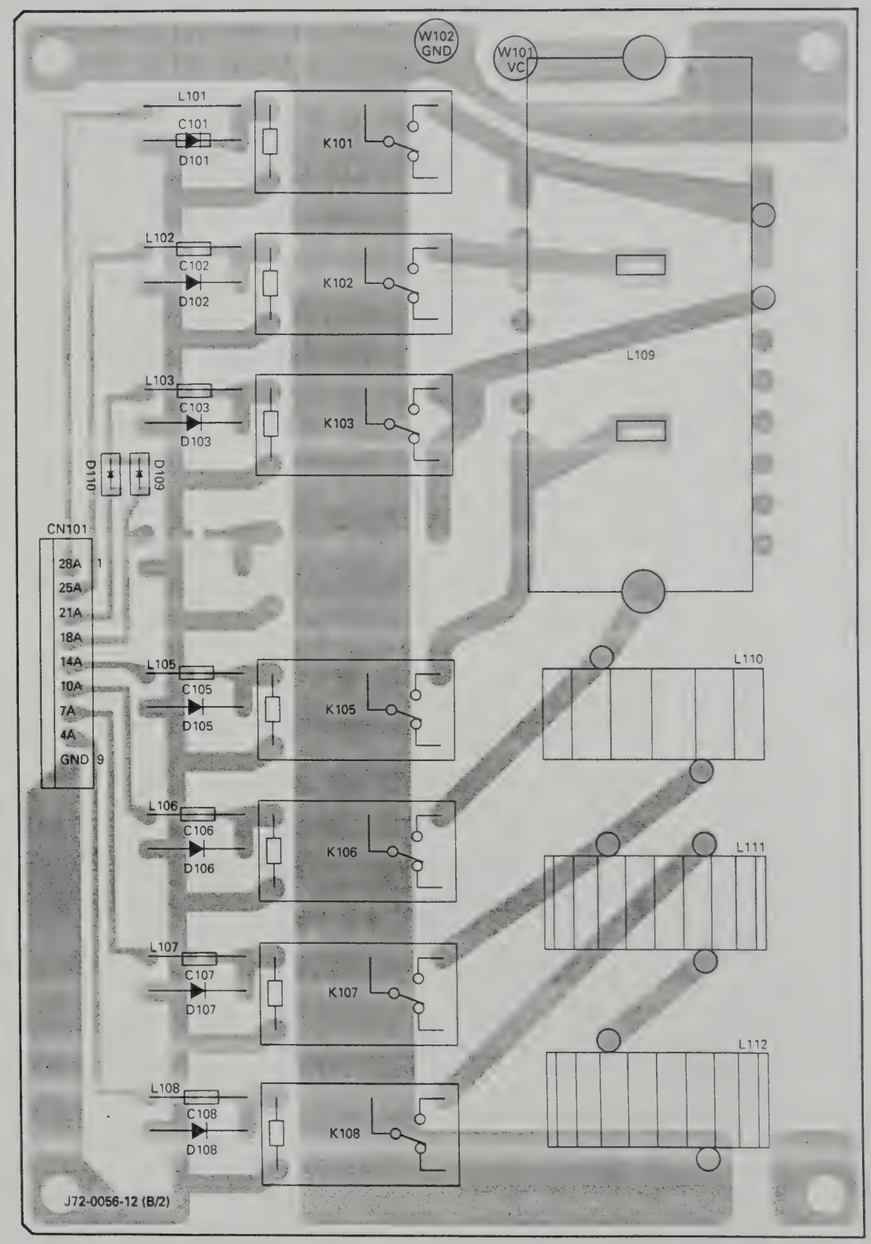

CONTROL UNIT (X53-356X-XX) (A/4) : CONTROL Foil side view
0-11 : K,P 0-21 : M 0-22 : M2 0-71 : X 2-71 : E 2-72 : E2 2-73 : E3 2-74 : E9

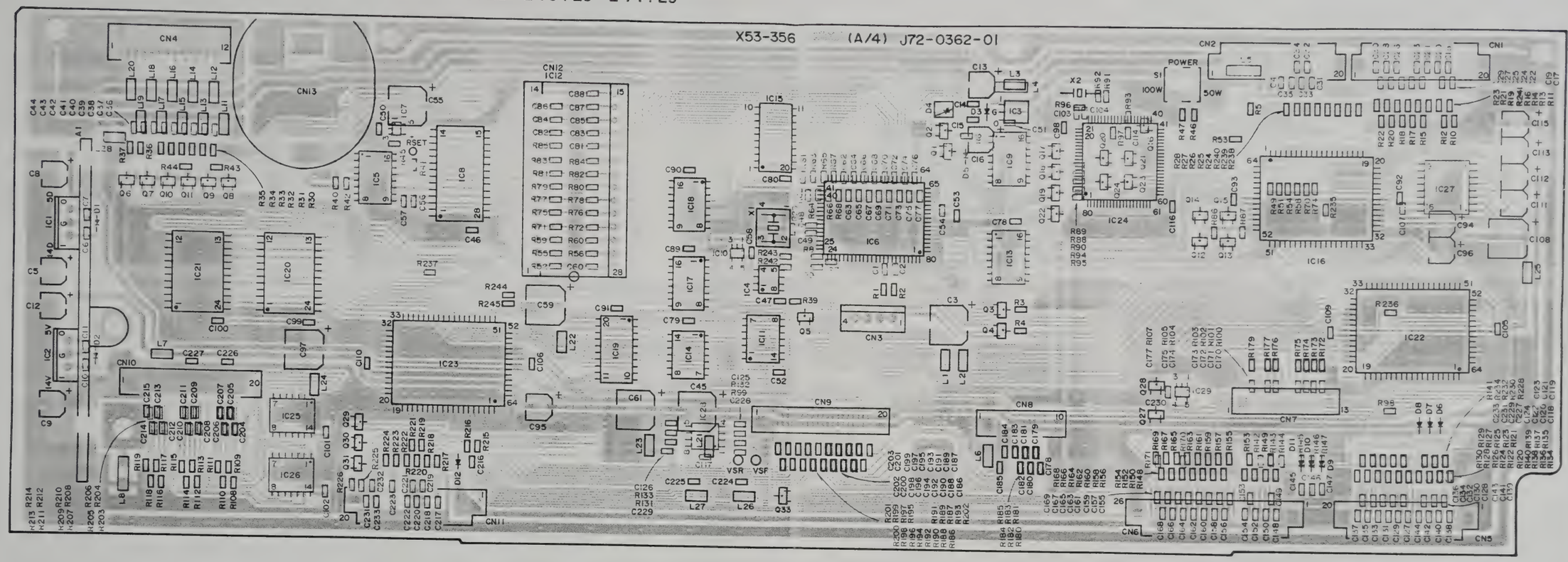

ADM232LAR

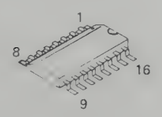

TC74VHC138F

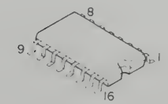

MB3780A
UPD6345GS

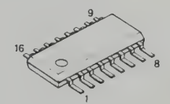

TC74VHC245F
TC74VHC573F

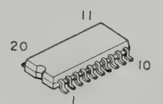

LZ92K371

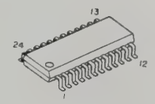

27C512RJLB-K

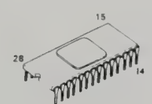

CXD1095Q

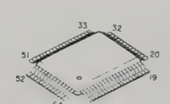

M37702S4BFP

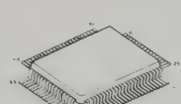

68HC05G2419553

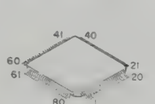

CONTROL UNIT (X53-356X-XX) (B/4) : SW Component side view

0-11 : K,P 0-21 : M 0-22 : M2 0-71 : X 2-71 : E 2-72 : E2 2-73 : E3 2-74 : E9

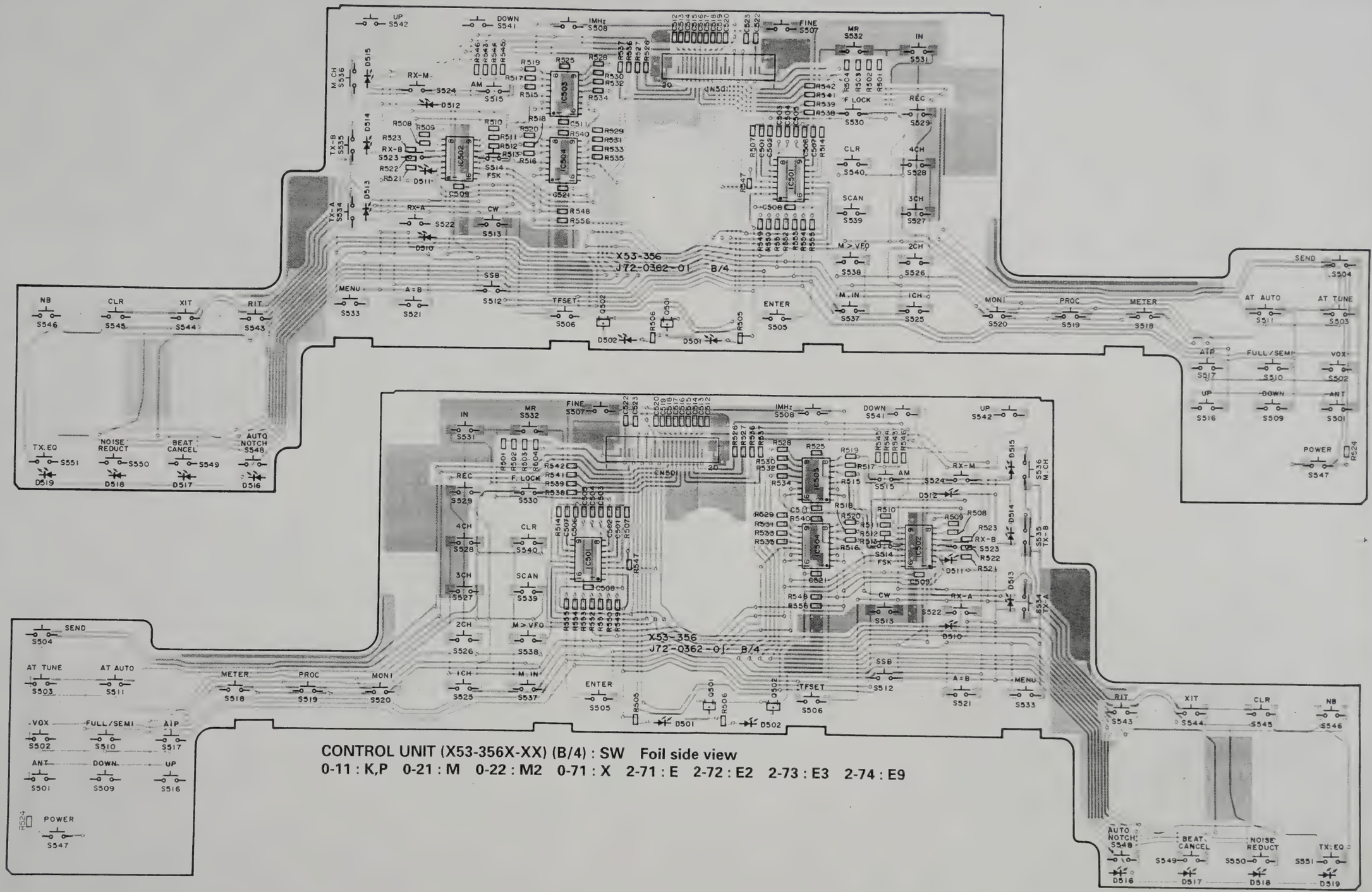

CONTROL UNIT (X53-356X-XX) (B/4) : SW Foil side view

0-11 : K,P 0-21 : M 0-22 : M2 0-71 : X 2-71 : E 2-72 : E2 2-73 : E3 2-74 : E9

TS-870S PC BOARD VIEWS

RF UNIT (X44-3210-00) (D/9)
Component side view

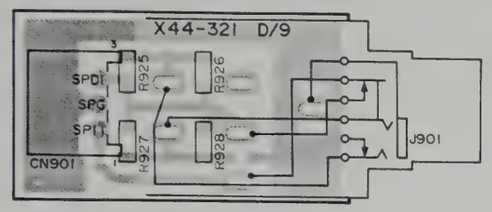

RF UNIT (X44-3210-00) (D/9)
Foil side view

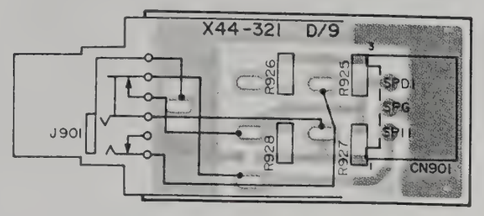

RF UNIT (X44-3210-00) (F/9)
Component side view

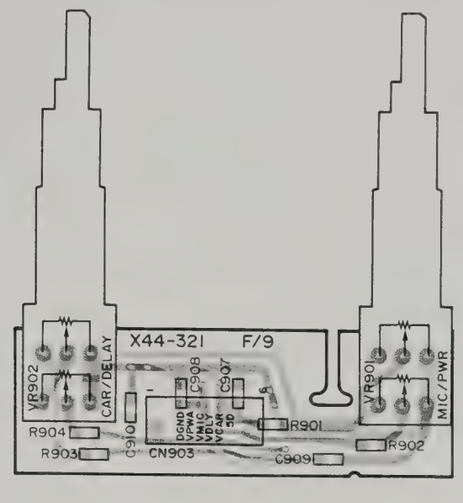

RF UNIT (X44-3210-00) (G/9)
Component side view

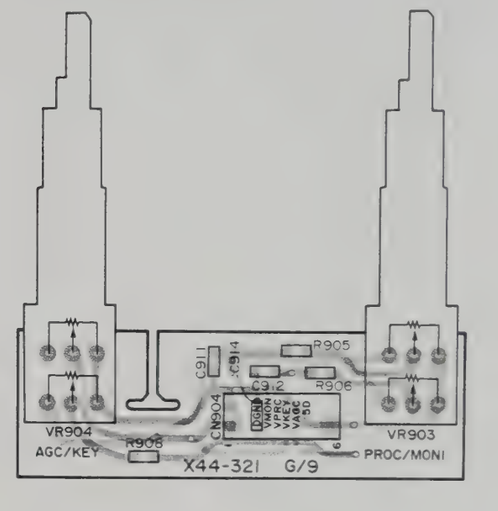

RF UNIT (X44-3210-00) (E/9)
Component side view

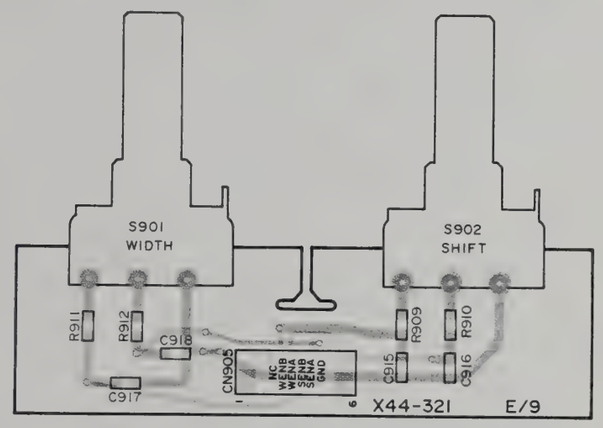

RF UNIT (X44-3210-00) (E/9)
Foil side view

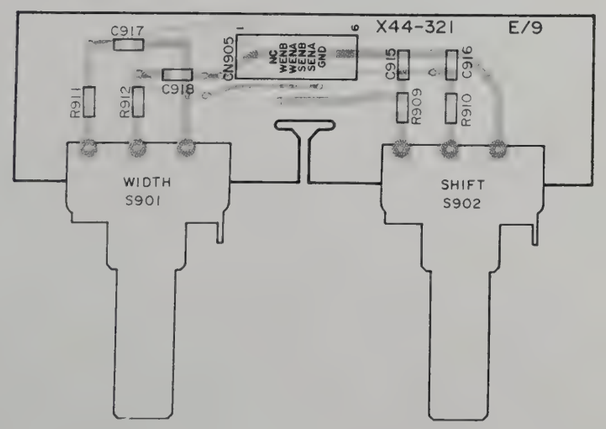

RF UNIT (X44-3210-00) (F/9)
Foil side view

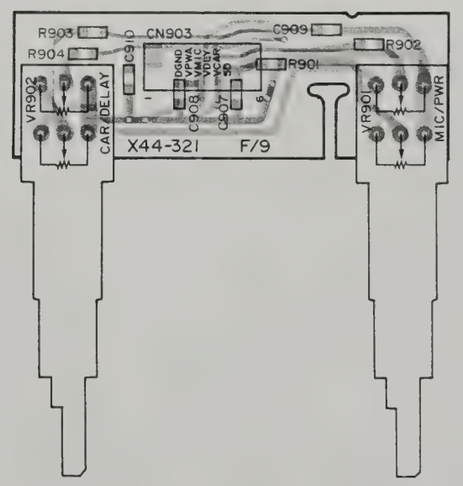

RF UNIT (X44-3210-00) (G/9)
Foil side view

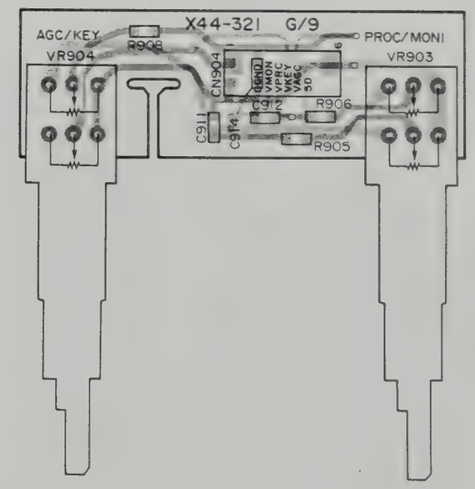

RF UNIT (X44-3210-00) (H/9)
Component side view

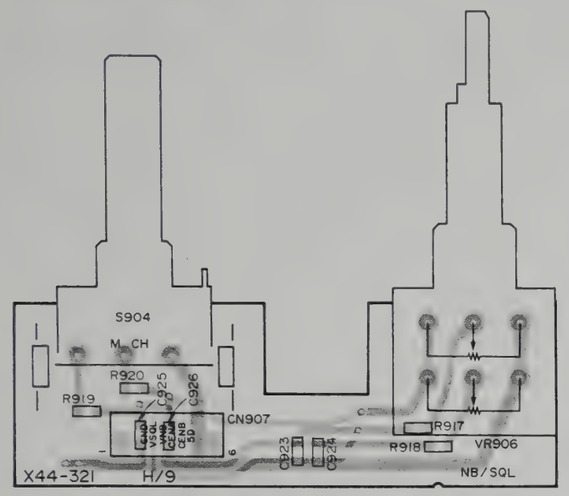

RF UNIT (X44-3210-00) (I/9)
Component side view

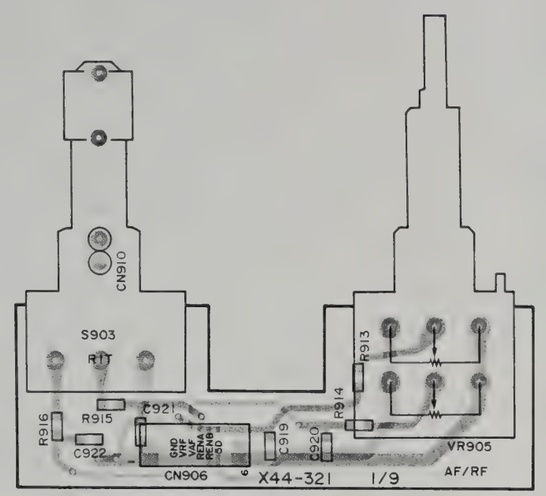

RF UNIT (X44-3210-00) (H/9)
Foil side view

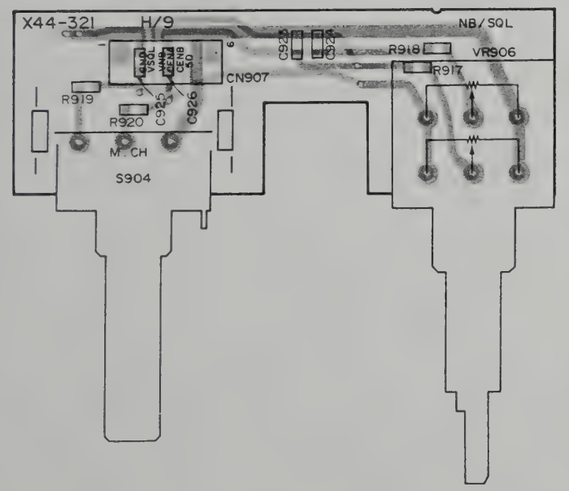

RF UNIT (X44-3210-00) (I/9)
Foil side view

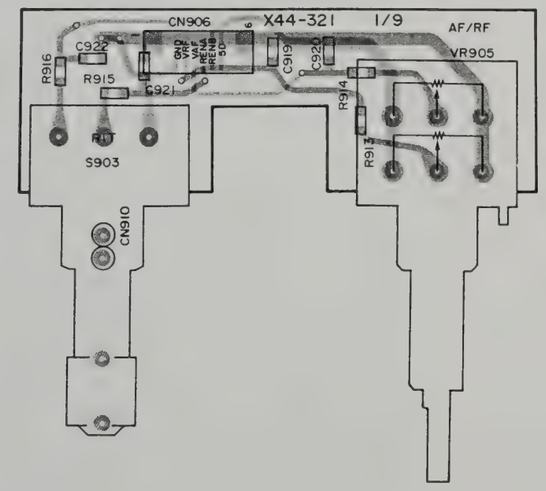

Component side
Foil side

FINAL UNIT (X45-351X-XX) (C/5) : CONNECTION Component side view
0-00 : K,P,M,M2,X 2-71 : E,E2,E3,E9

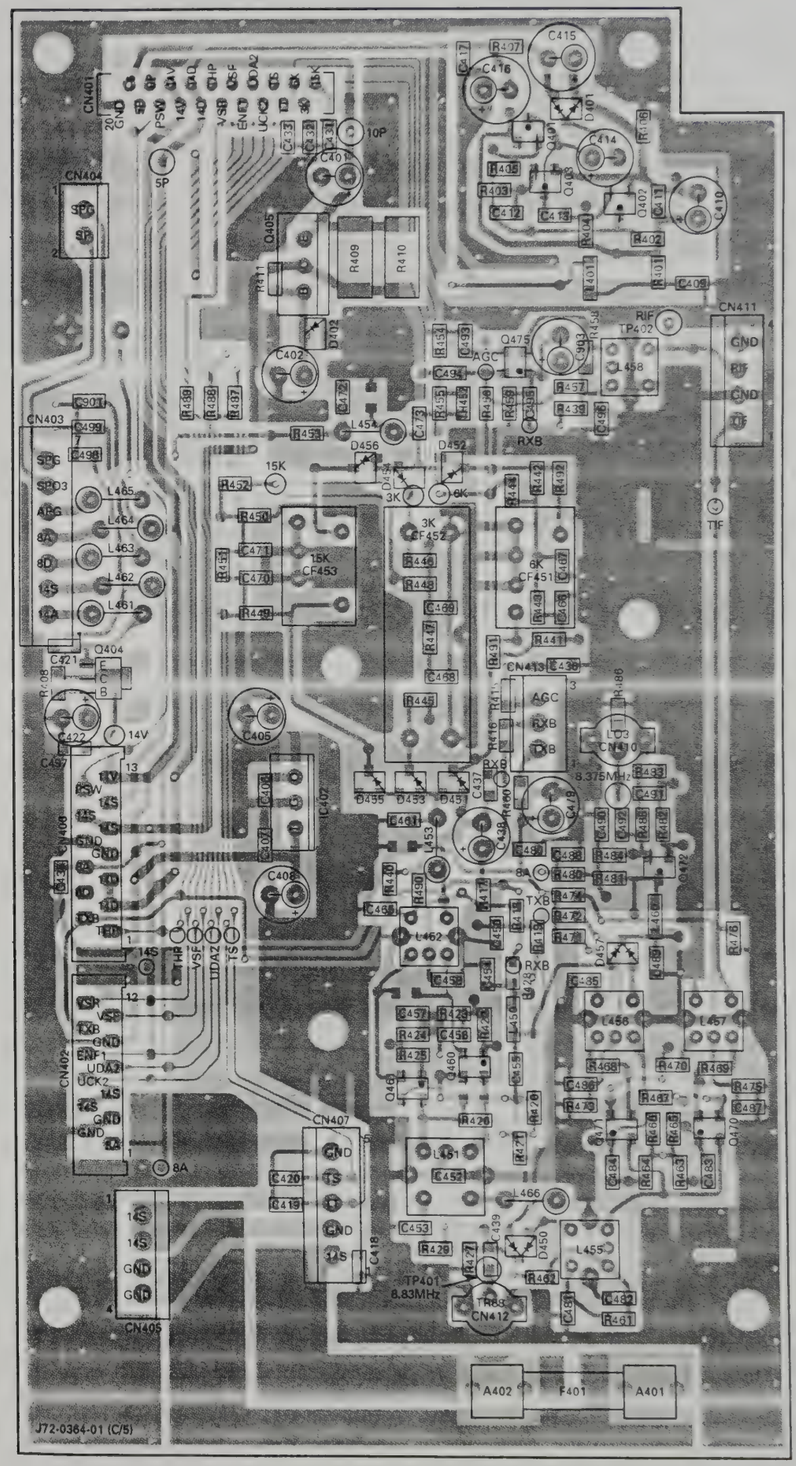

TS-870S CIRCUIT DIAGRAM

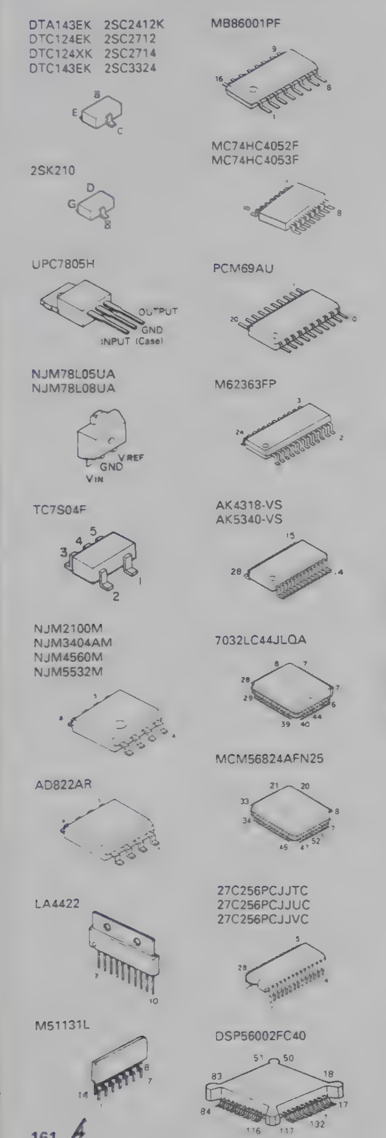

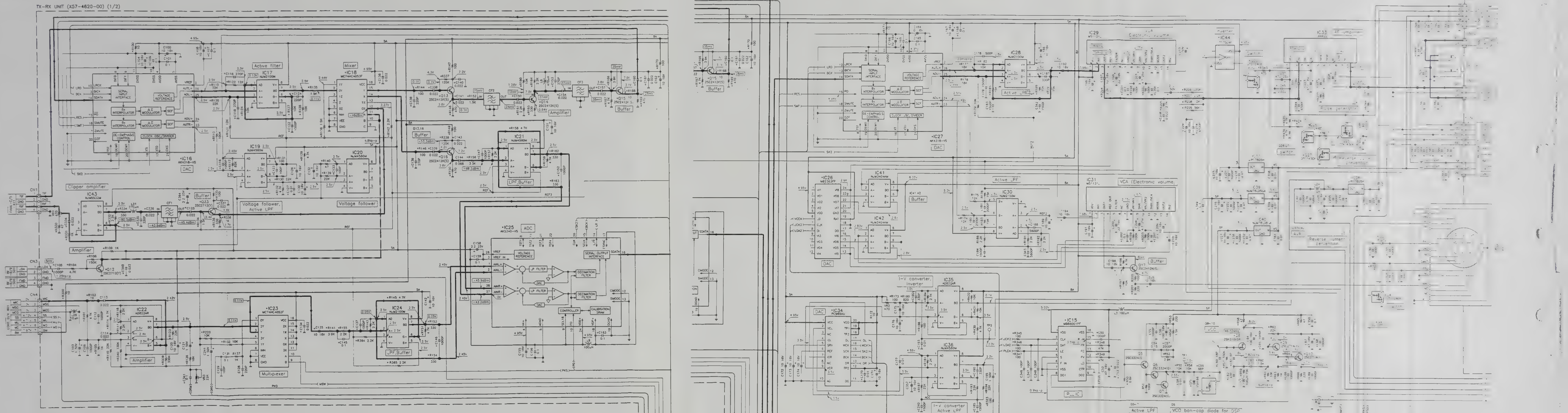

IC15	MB86001PF	Q4,22	DTC124EK	D3,8	RLS73		
IC16,27	AK4318-VS	Q5~7	2SC3324(G)	D5	1SV166		
IC17,24,28,30	NJM2100M	Q8	2SK210(GR)				
IC18	MC74HC4053F	Q9,10	2SC2714(Y)				
IC19~21,36	NJM4560M	Q12,23	2SC2712(Y)				
IC22,35	AD822AR	Q13~17	2SC2412K(S)				
IC23	MC74HC4052F	Q25	DTA143EK				
IC25	AK5340-VS	Q26	DTC124XK				
IC26	M62363FP	Q27	DTC143EK				
IC29,31	M51131L						
IC33	LA4422						
IC34	PCM69AU						
IC37,38	μPC7805H						
IC39	NJM78L05UA						
IC40	NJM78L08UA						
IC41,42	NJM3404AM						
IC43	NJM5532M						
IC44	TC7S04F						

Note) • Ref. No. : Parts of pattern 1.

TX-RX UNIT (X57-4620-00) (2/2)

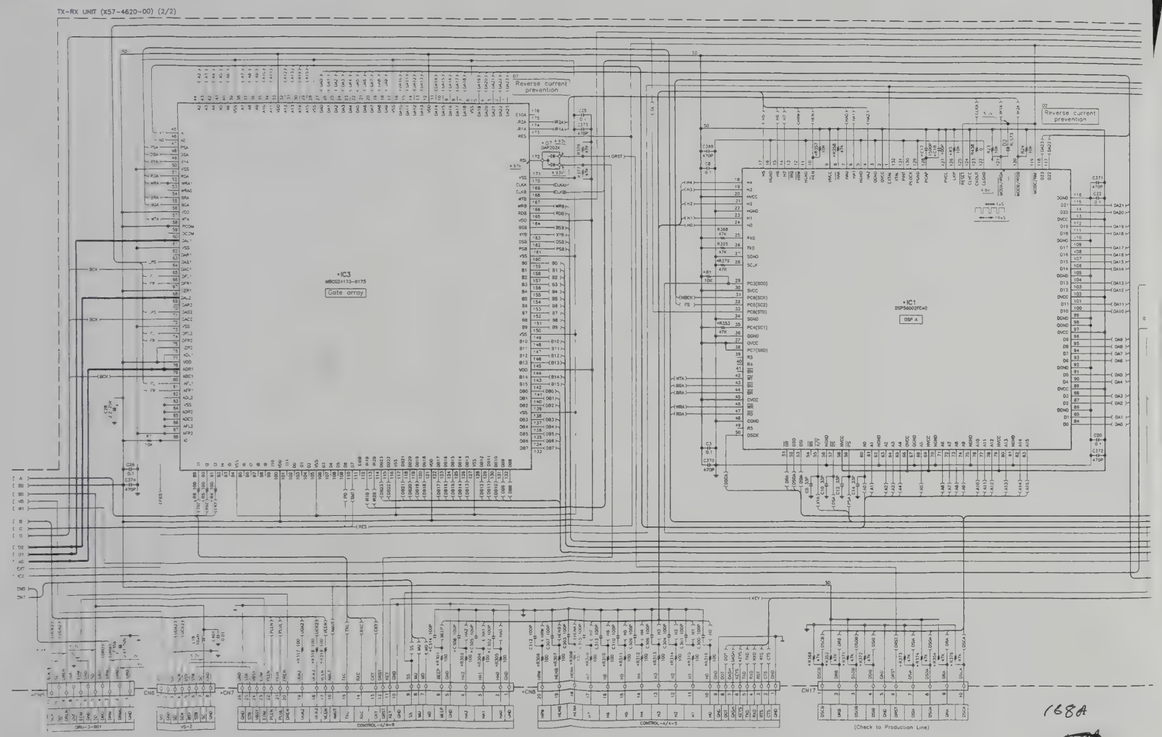

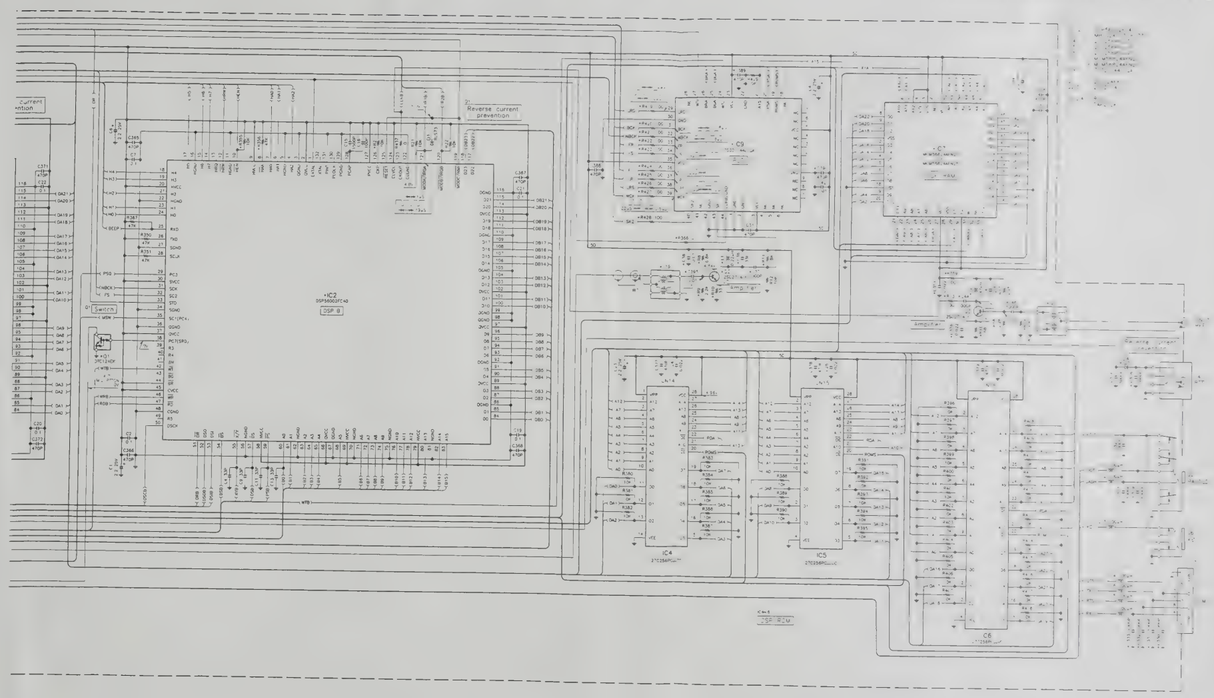

TS-870S CIRCUIT DIAGRAM

CONTROL UNIT (X53-356X-XX) (A/4) : CONTROL
0-11 : K,P 0-21 : M 0-22 : M2 0-71 : X 2-71 : E 2-72 : E2 2-73 : E3 2-74 : E9

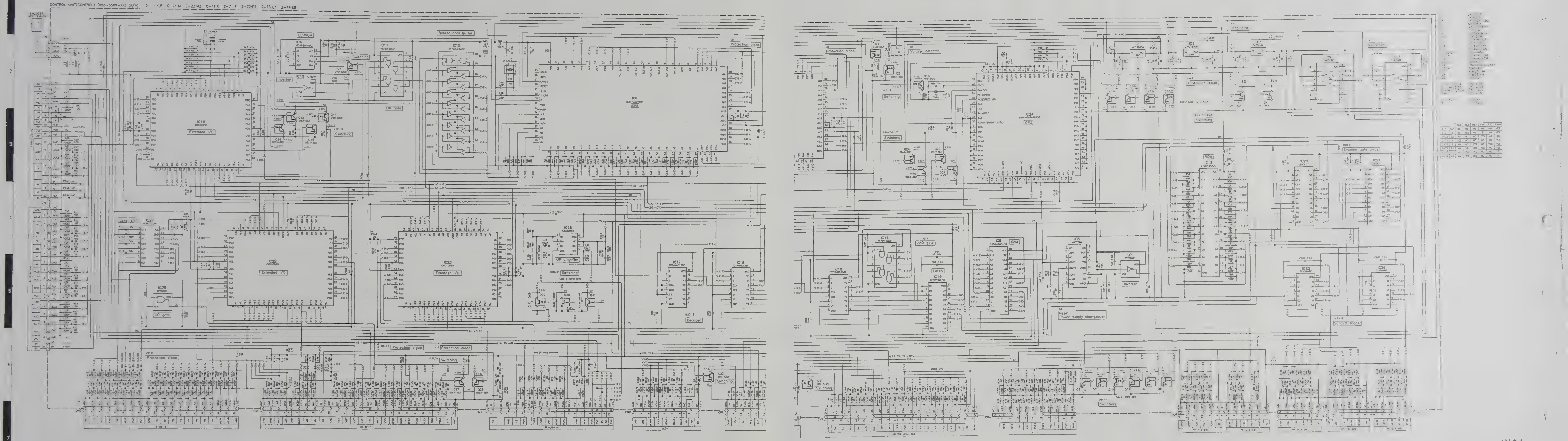

TX-RX UNIT (X57-4620-00) Component side view + Foil side parts

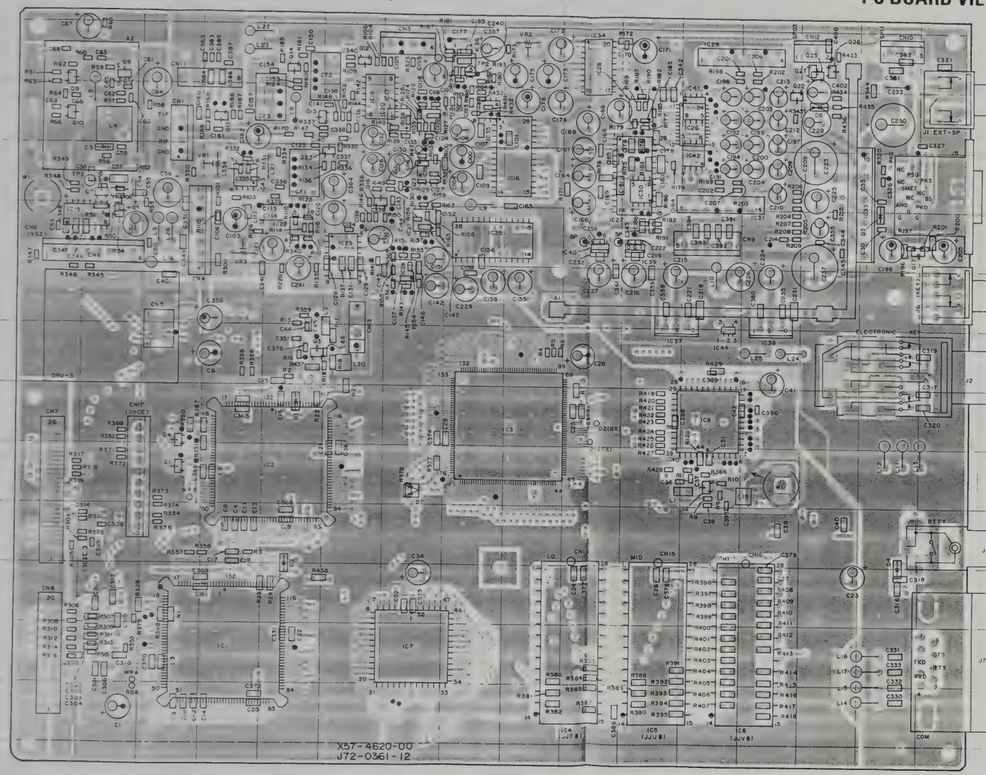

Ref No	Address	Ref No	Address
IC1	12X	Q1	9W
C2	3X	Q2	1AF
IC3	8AC	Q3	7Y
IC4	13AD	Q4	13W
IC5	13AE	Q5	5V
IC6	12AG	Q6	4V
IC7	12AA	Q7	4V
IC9	8AF	Q8	2V
IC15	5U	Q9	2U
IC16	4AC	Q10	3U
IC17	3AA	Q12	2Z
IC18	3Z	Q13	3Y
IC19	4AA	Q14	2Y
IC20	3AA	Q15	2X
IC21	5AA	Q16	4Z
IC22	5Y	Q17	5AA
C23	5Z	Q22	3AH
IC24	6AA	Q23	4Z
IC25	5AB	Q25	2AH
C26	3AF	Q26	2AH
IC27	4AE	Q27	2AH
IC28	3AE	D1	8Y
IC29	2AF	D2	11Y
IC30	4AE	D3	5AI
IC31	4AF	D4	11AI
C33	4AI	D5	4V
IC34	2AE	D7	9AA
IC35	3AB	D8	3AH
C36	2AB		
IC37	7AE		
IC38	7AG		
C39	5AE		
IC40	5AD		
IC41	3AF		
C42	4AF		
IC43	4X		
IC44	7AF		

Component side
Pattern 1
Pattern 2
Pattern 3
Pattern 4
Foil side

● Connect 1 and 4

160A

TX-RX UNIT (X57-4620-00) Foil side view

Ref No	Address
C17	3M
C19	4M
C20	3N
C21	5M
C22	5O
IC24	6M
IC28	3I
IC30	4I
C35	3L
C36	2L
C39	5J
C40	5J
IC41	2I
IC42	4I
L43	4P
Q3	7O
Q5	5R
Q6	4R
Q7	4R
Q17	5E
Q25	2F
D1	8O
D2	11O
D4	11E
D8	3F

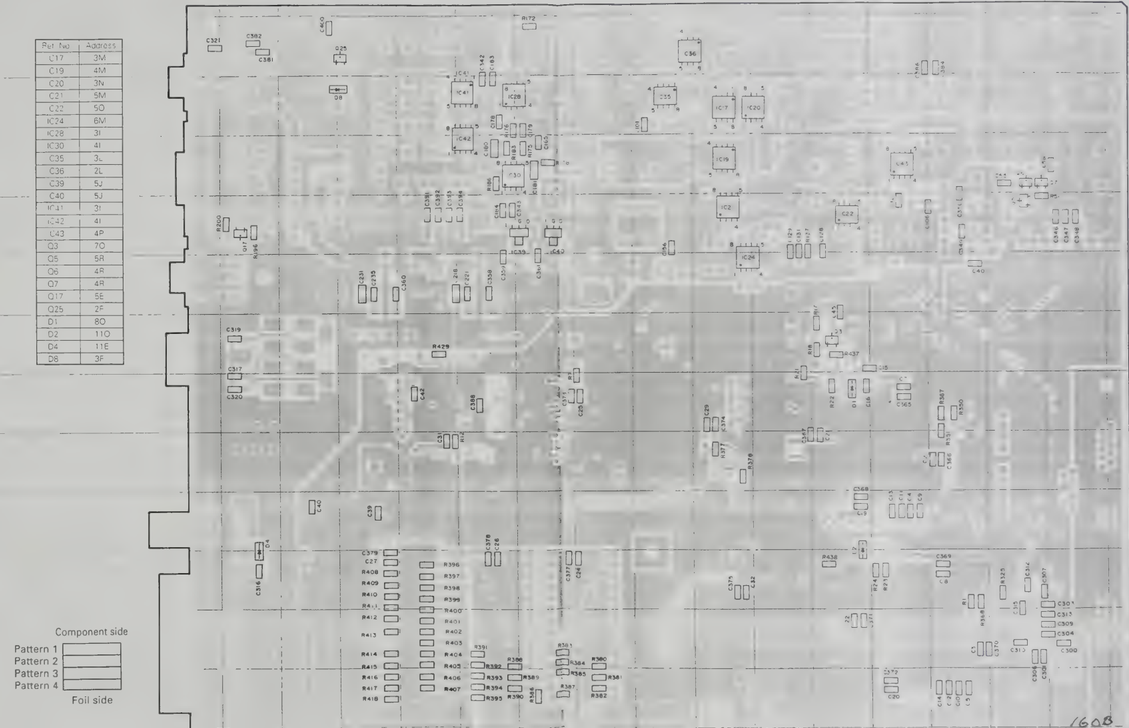

160B

TS-870S

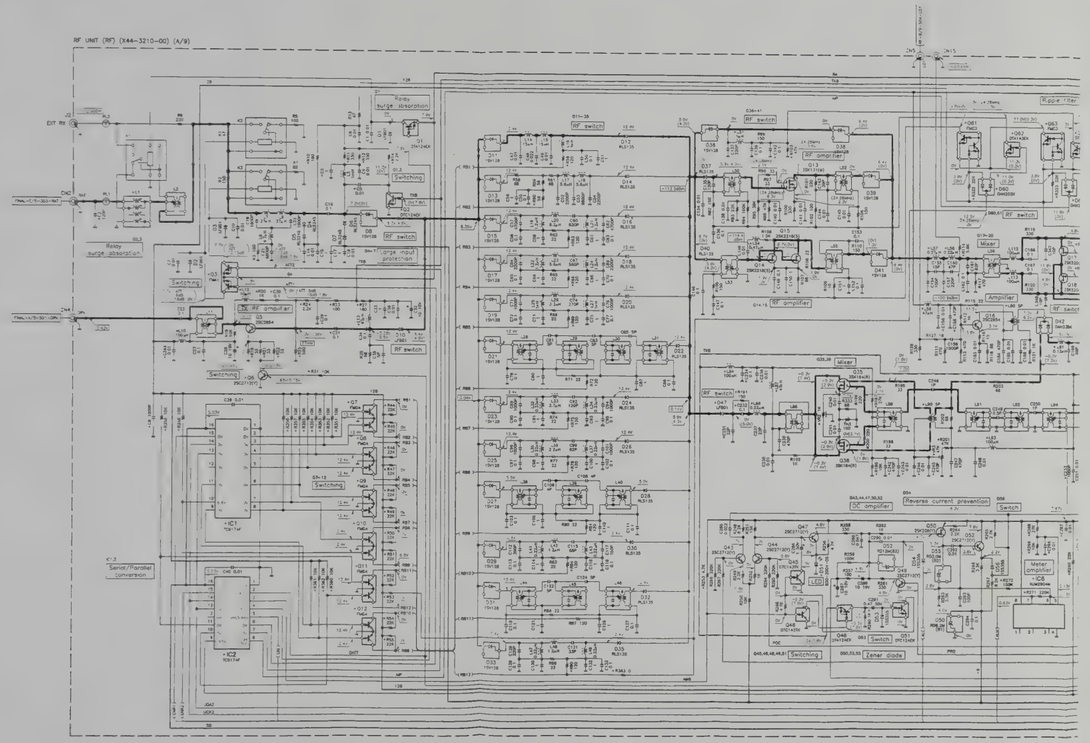

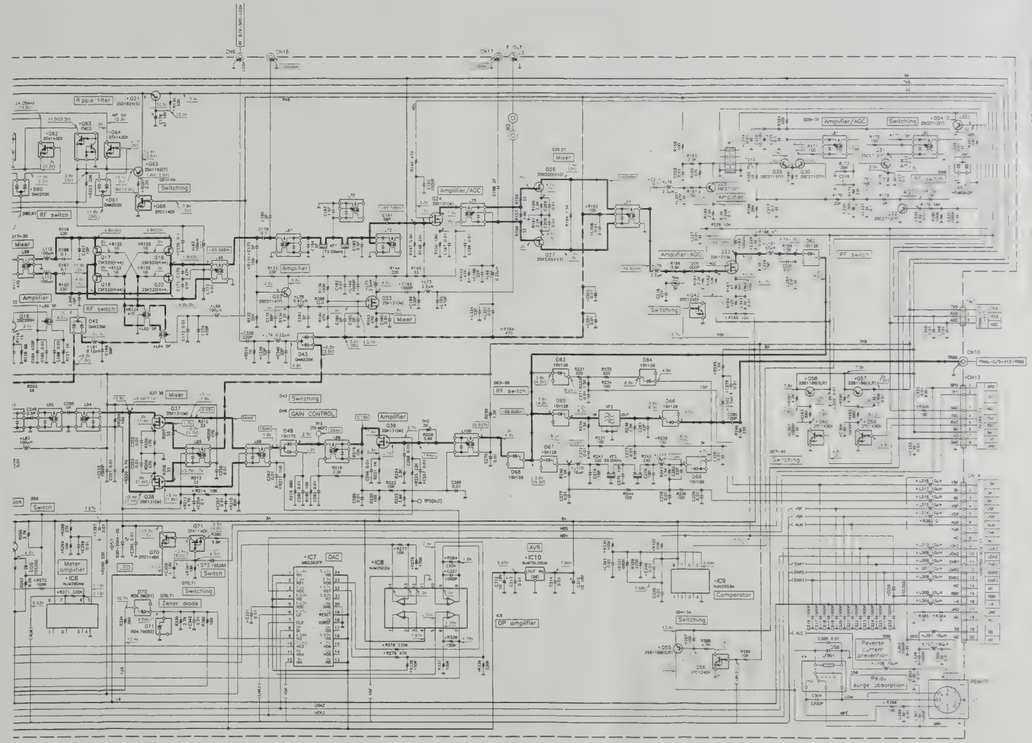

Note) • Ref. No. : Parts of pattern 1.

TS-870S CIRCUIT DIAGRAM

RF UNIT (X44-3210-00) (B/9) : PLL

RF UNIT (PLL) (X44-3210-00) (B/9)

DTA124EK 2SC2996
DTC114EK 2SC3722K
2SC2712 2SD1757K
2SC2714

2SC2954

2SK508NV

TA78DS09F
TA78L09F

SN16913P

SN76514N

MB86001PF
UPD74HC390G

F71022

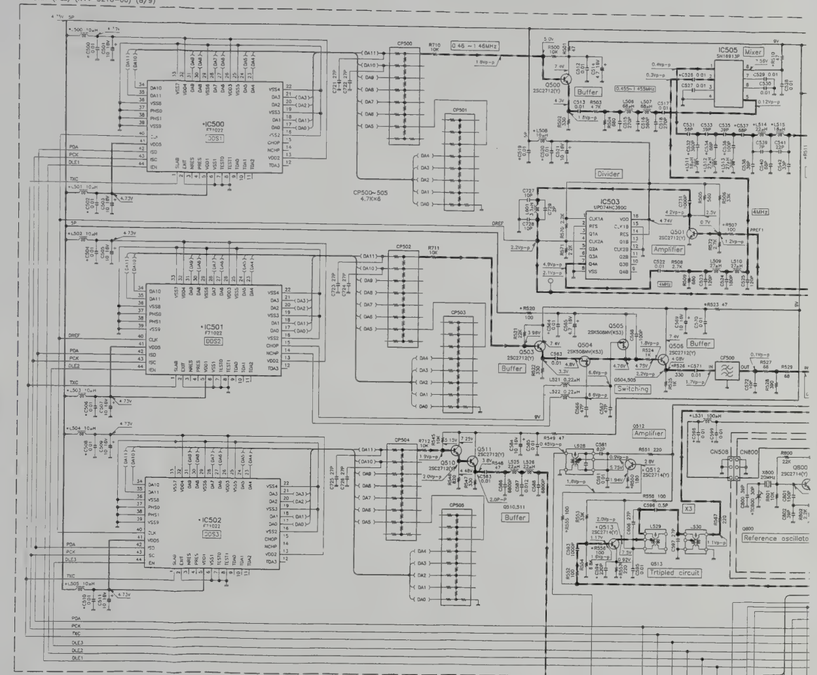

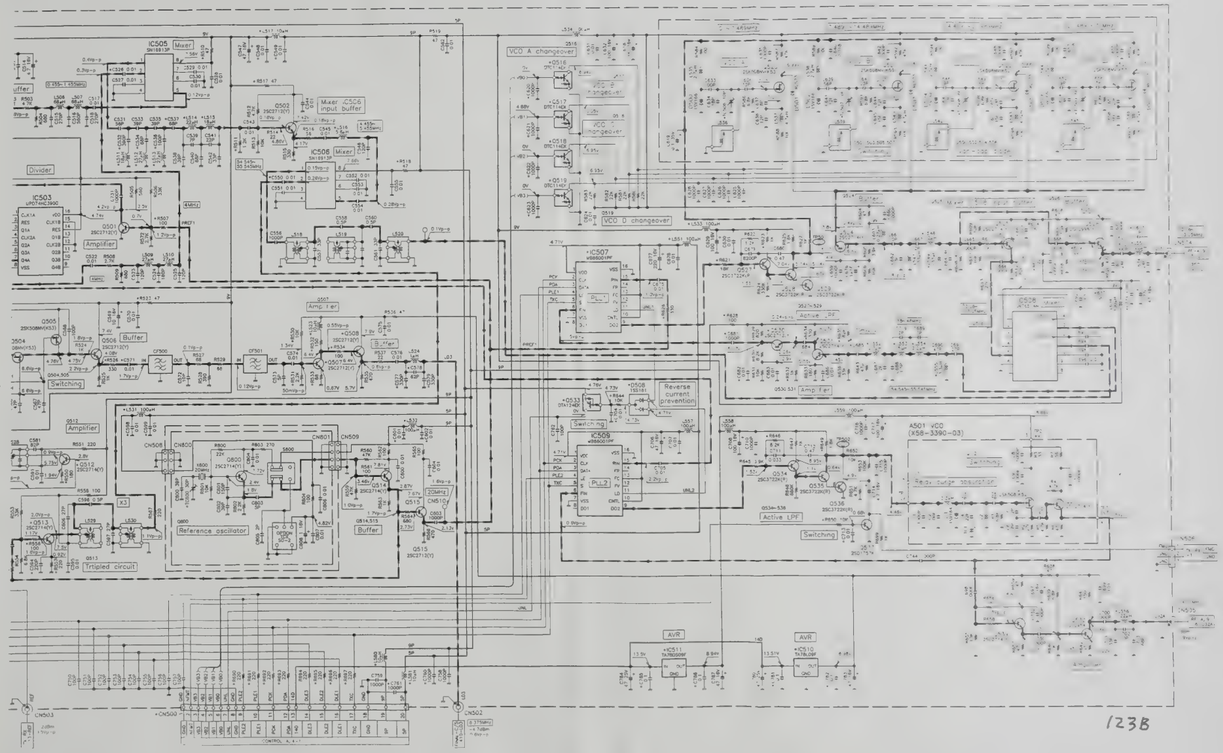

FINAL UNIT (X45-351X-XX) (A,B,D,E/5) 0-00 : K,P,M,M2,X 2-71 : E,E2,E3,E9

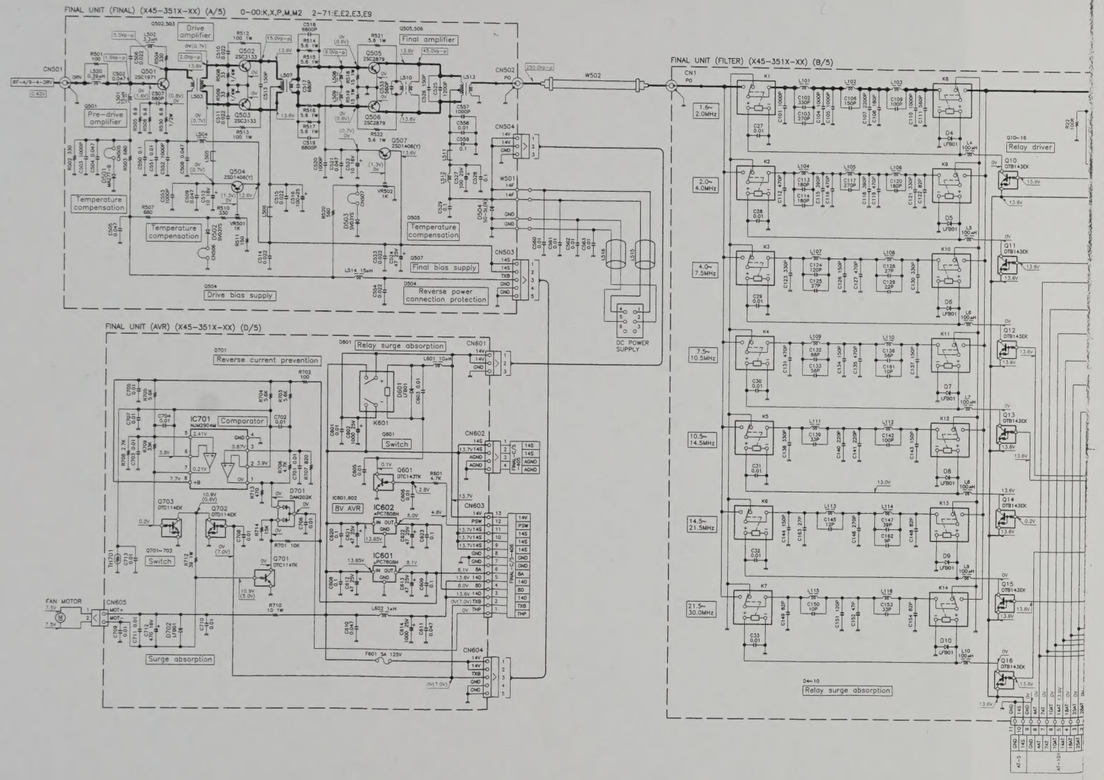

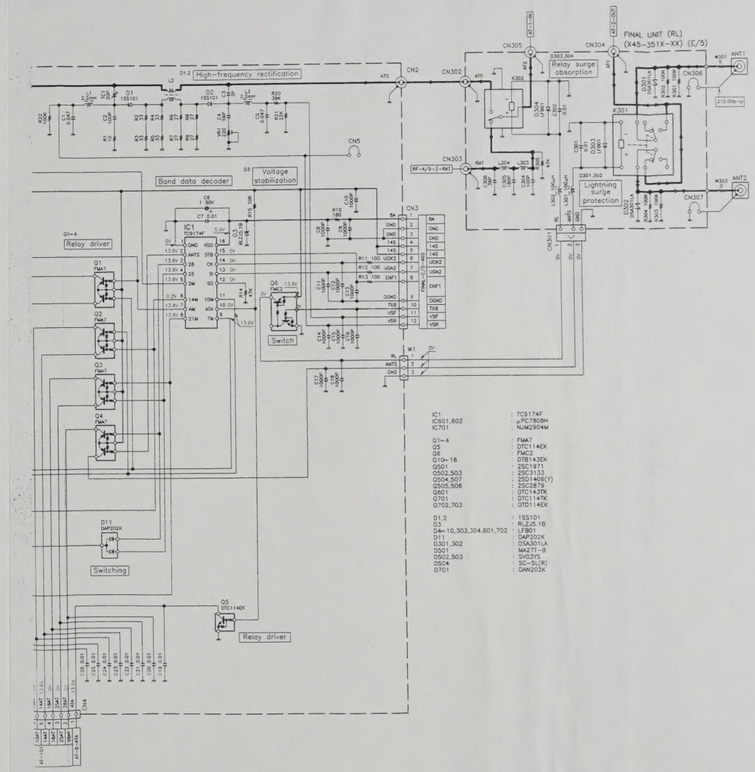

IC1 : TC9174F
IC601,602 : μPC7808H
IC701 : NJM2904M

Q1~4 : FMA7
Q5 : DTC114EK
Q6 : FMC2
Q10~16 : DTB143EK
Q501 : 2SC1971
Q502,503 : 2SC3133
Q504,507 : 2SD1406(Q)
Q505,506 : 2SC2879
Q601 : DTC143TK
Q701 : DTC114TK
Q702,703 : DTD114EK

D1,2 : 1SS101
D3 : RLZ5.1B
D4~10,303,304,601,702 : LFB01
D11 : DAP202K
D301,302 : DSA301LA
D501 : MA277-B
D502,503 : SVD315
D504 : SG-5L(K)
D701 : DAN202K

DTB143EK DTC114TK DTC114EK DTD114EK

2SC2879

2SC1971

2SD1406

2SC3133

UPC7808H

FMA7
FMC2

NJM2904M

TC9174F

1361

1362

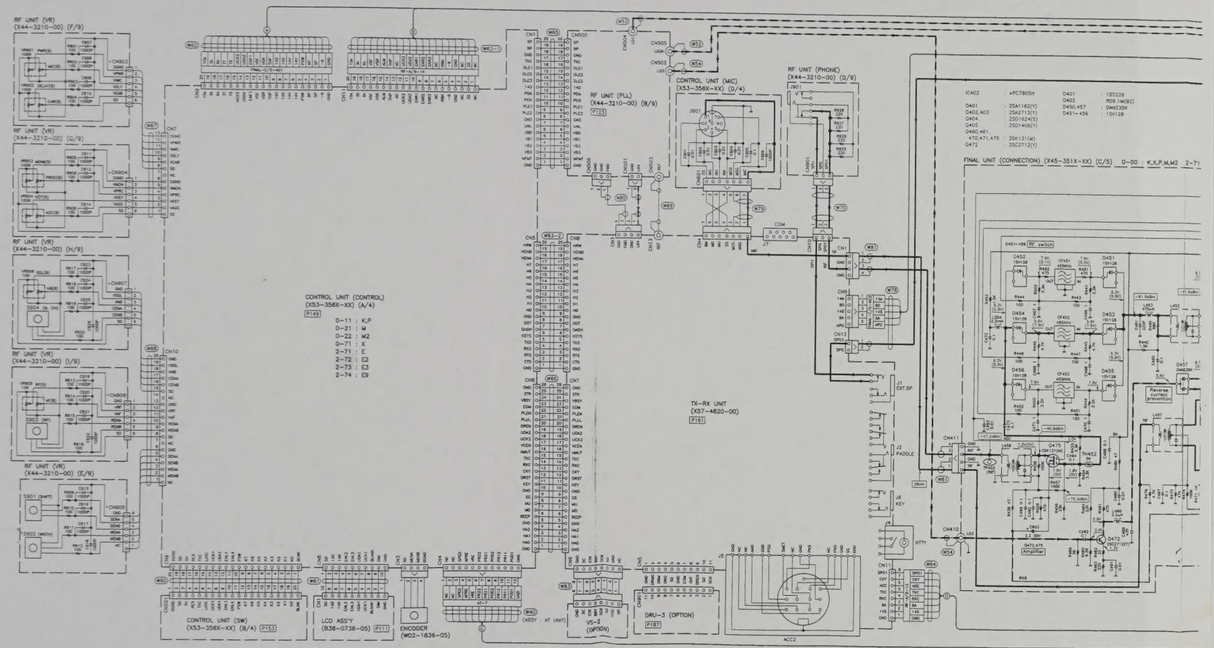

SCHEMATIC DIAGRAM TS-870S

178A

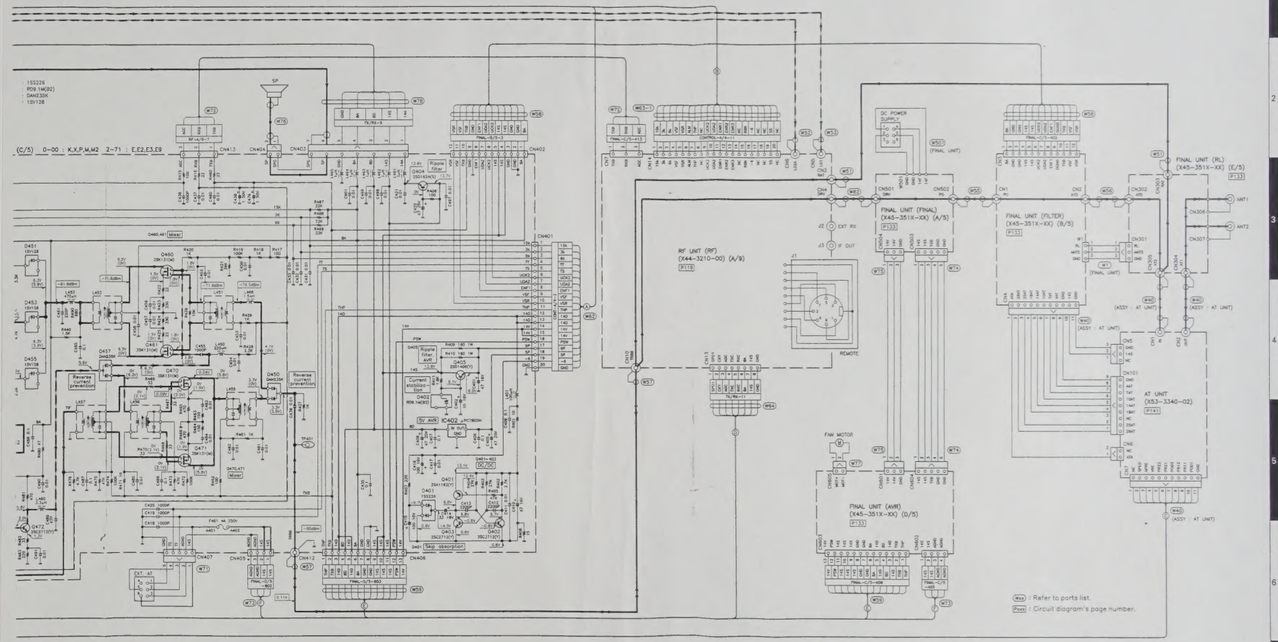

178B

BLOCK DIAGRAM

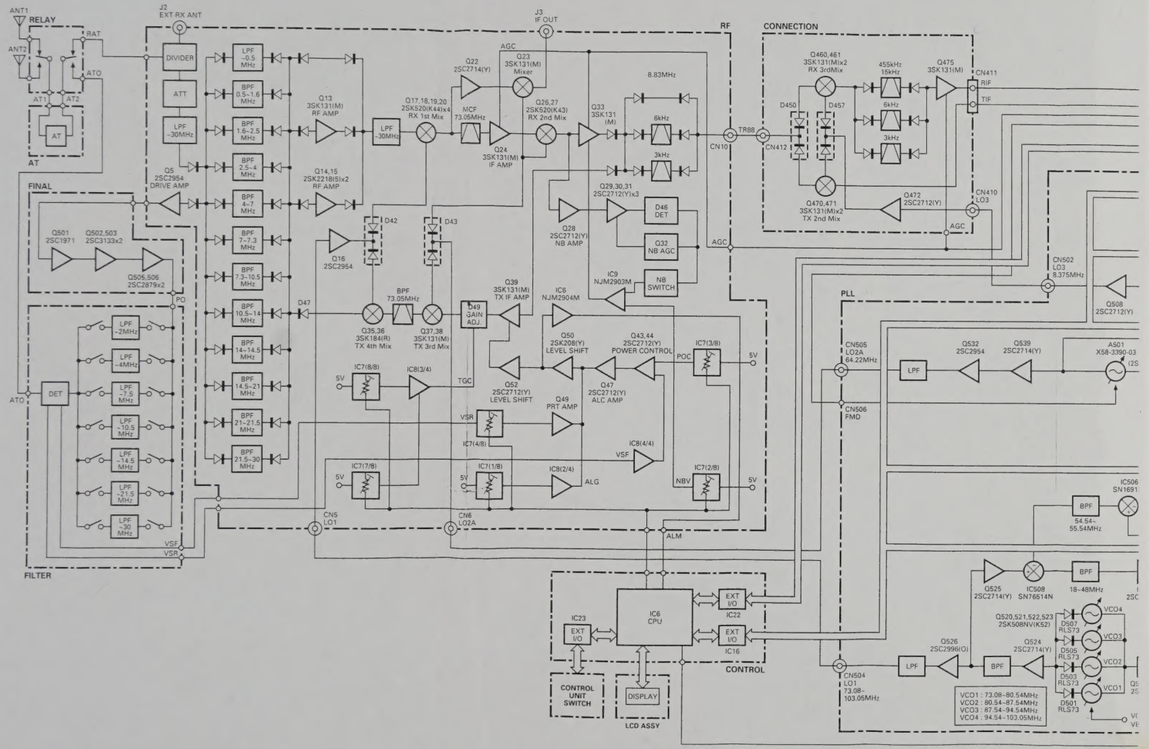

TS-870S TS-870S

BLOCK DIAGRAM

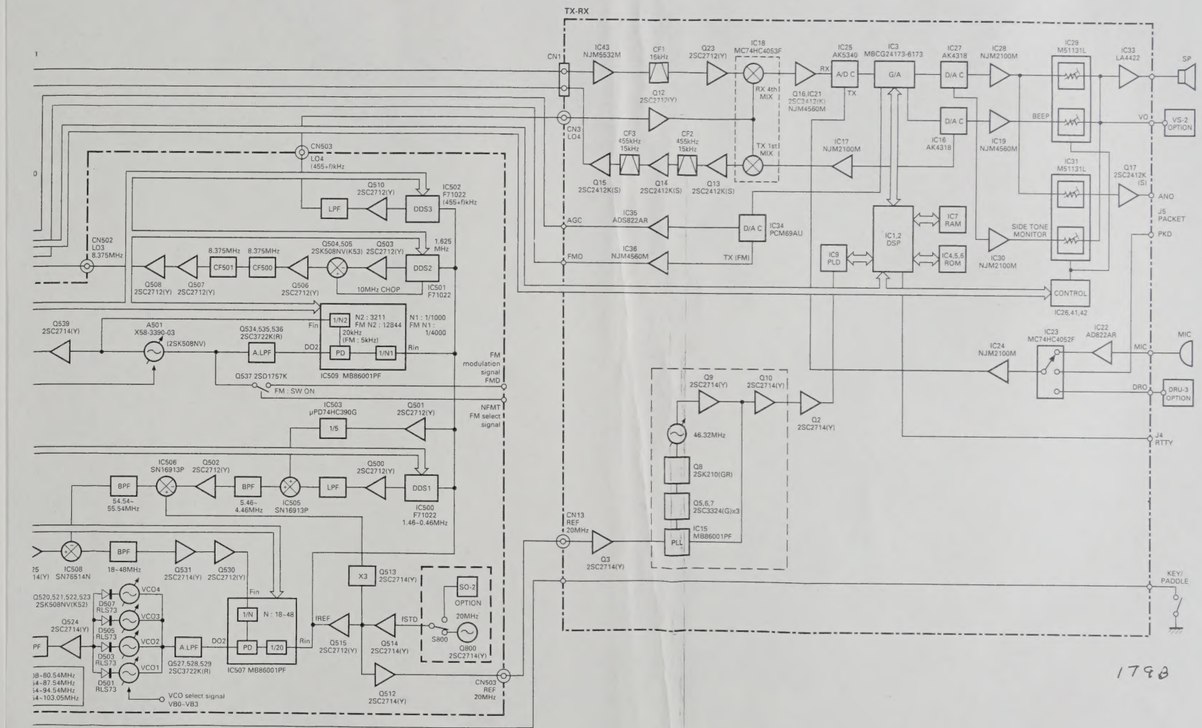

Receiver Section

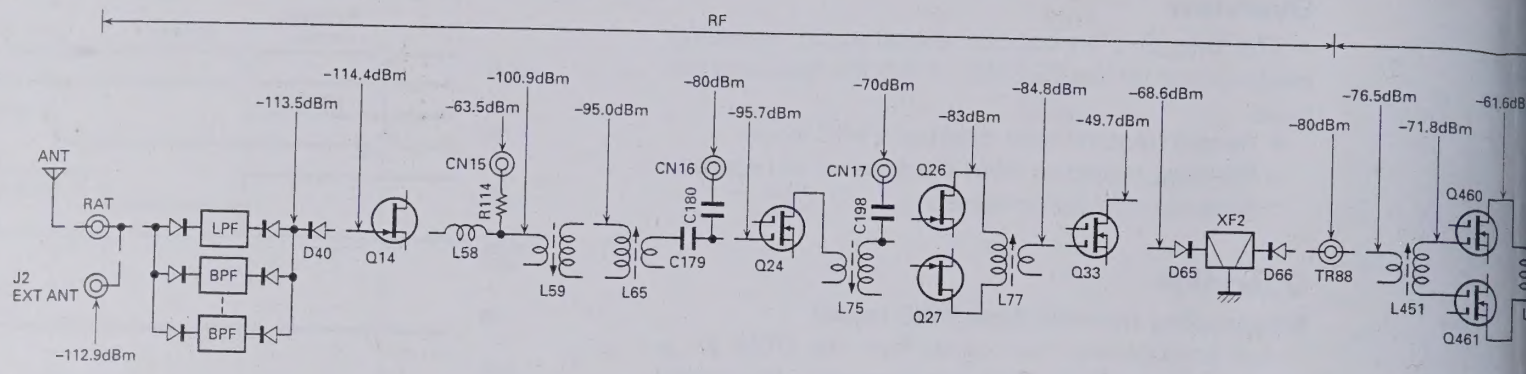

■ Measurement condition

Frequency : 14.2MHz
ANT input : –113dBm
AF output : 0.63V/8Ω, 1kHz

1. The figures shown are signal generator output required for a constant audio output with a constant AF gain
   Set the AF gain control for 0.63V/8Ω audio output at –113dBm signal generator input at 14.200MHz.
2. To measure signal generator output connect a 0.01μF capacitor between the signal generator and the chec
3. AIP : OFF

Transmitter Section

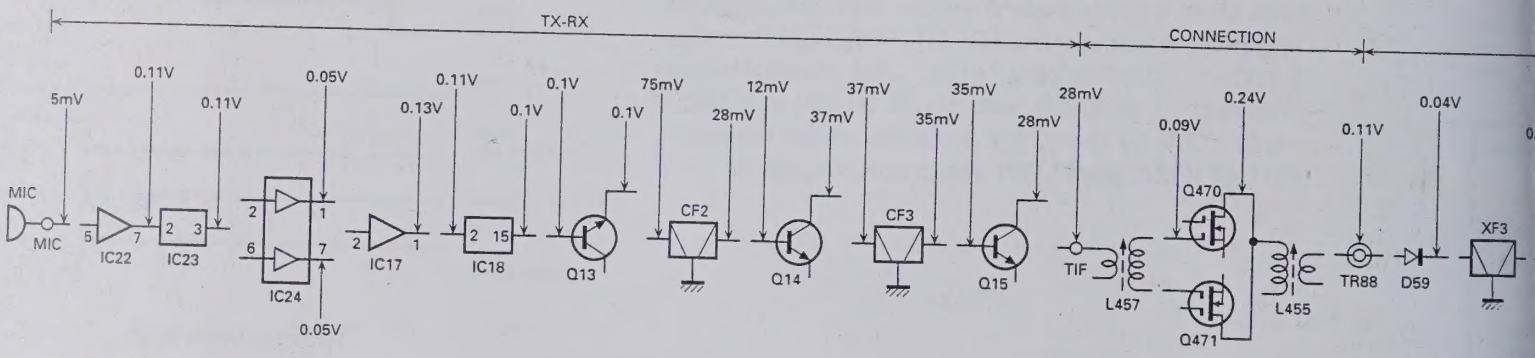

■ Measurement condition

Frequency : 14.2MHz
Output : 100W (ALC zone maximum)
Mode : USB (Low frequency section)
Microphone input : 1kHz, 5mV (Low frequency section)

1. High frequency section is measured by the RF voltmeter in the CW mode.
2. Low frequency section is measured by the AF voltmeter.
3. Final unit section is measured by the oscilloscope.